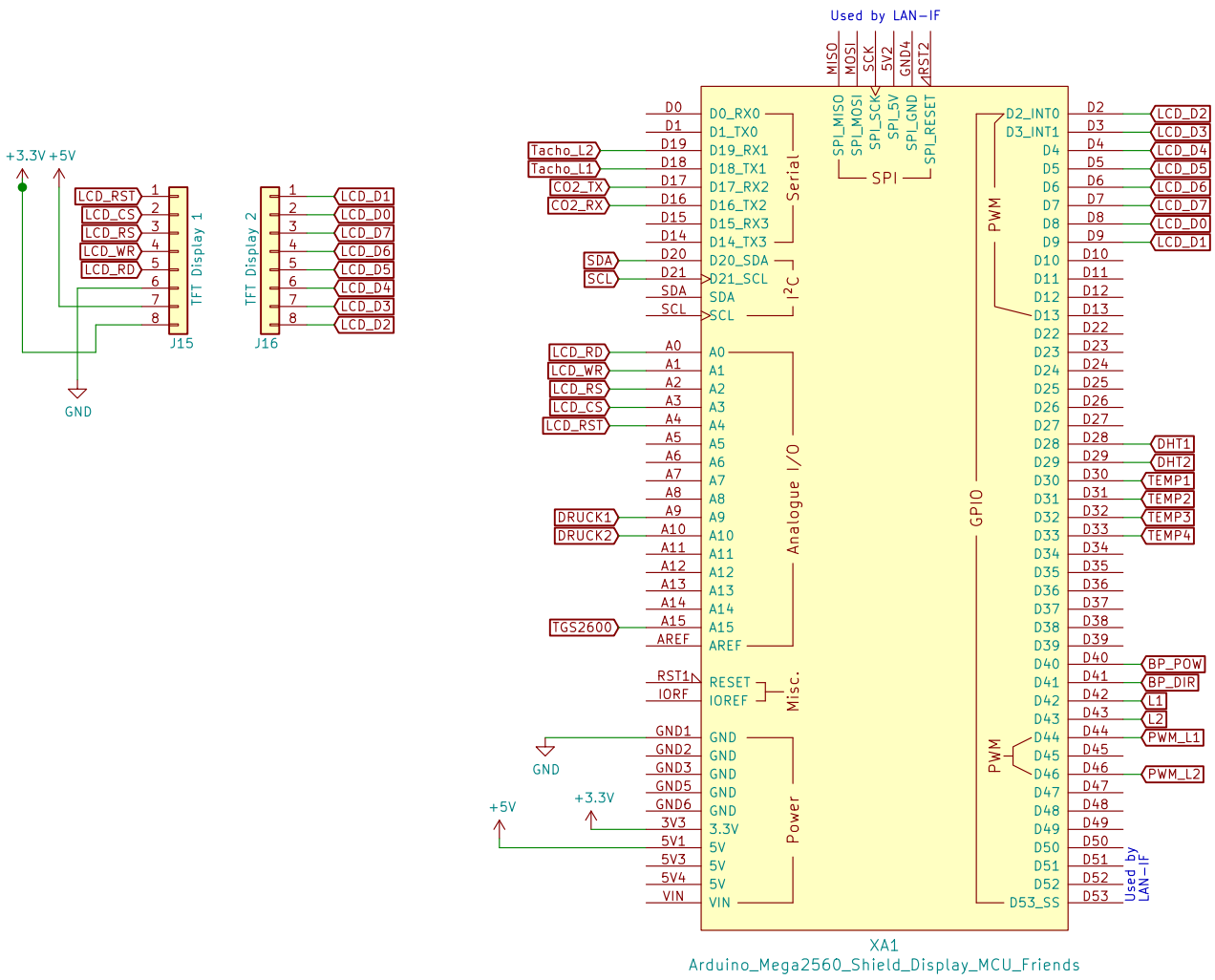

https://github.com/svenjust/room-ventilation-system

sven@familie-just.de

Sheet: /

File: P300_Display_IF.sch

Title: Interface Platine Display -> Arduino

Size: A4	Date: 2019-01-24	**Rev: V0.26-dev**
KiCad E.D.A. kicad (5.0.1)-3		Id: 1/1