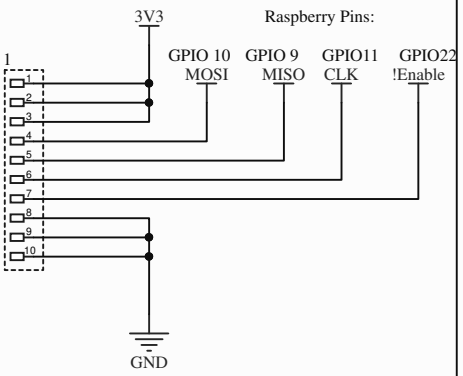

Connection to Raspberry

ADC Circuit

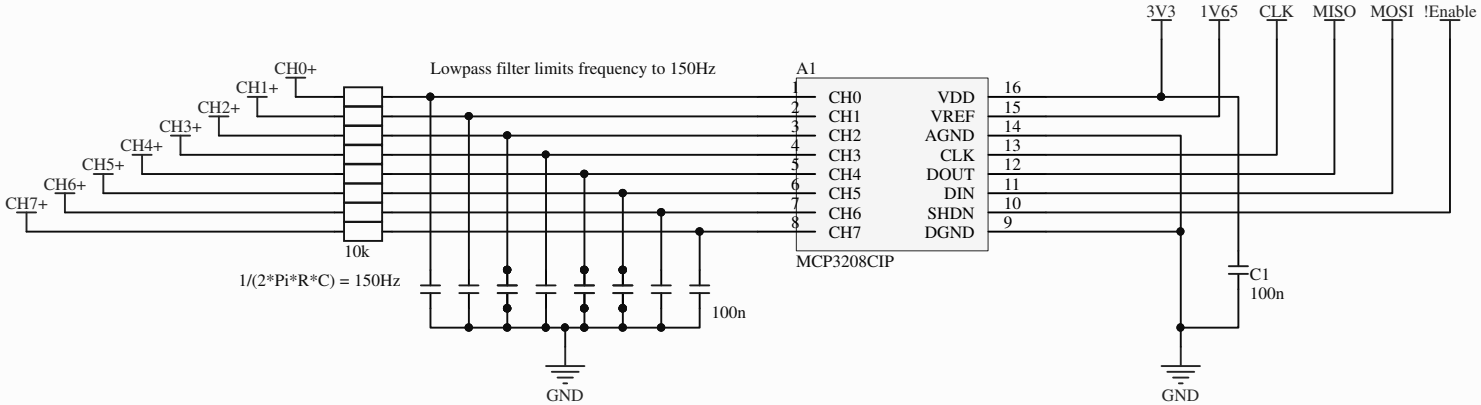

Protects ACD Inputs from voltage peaks

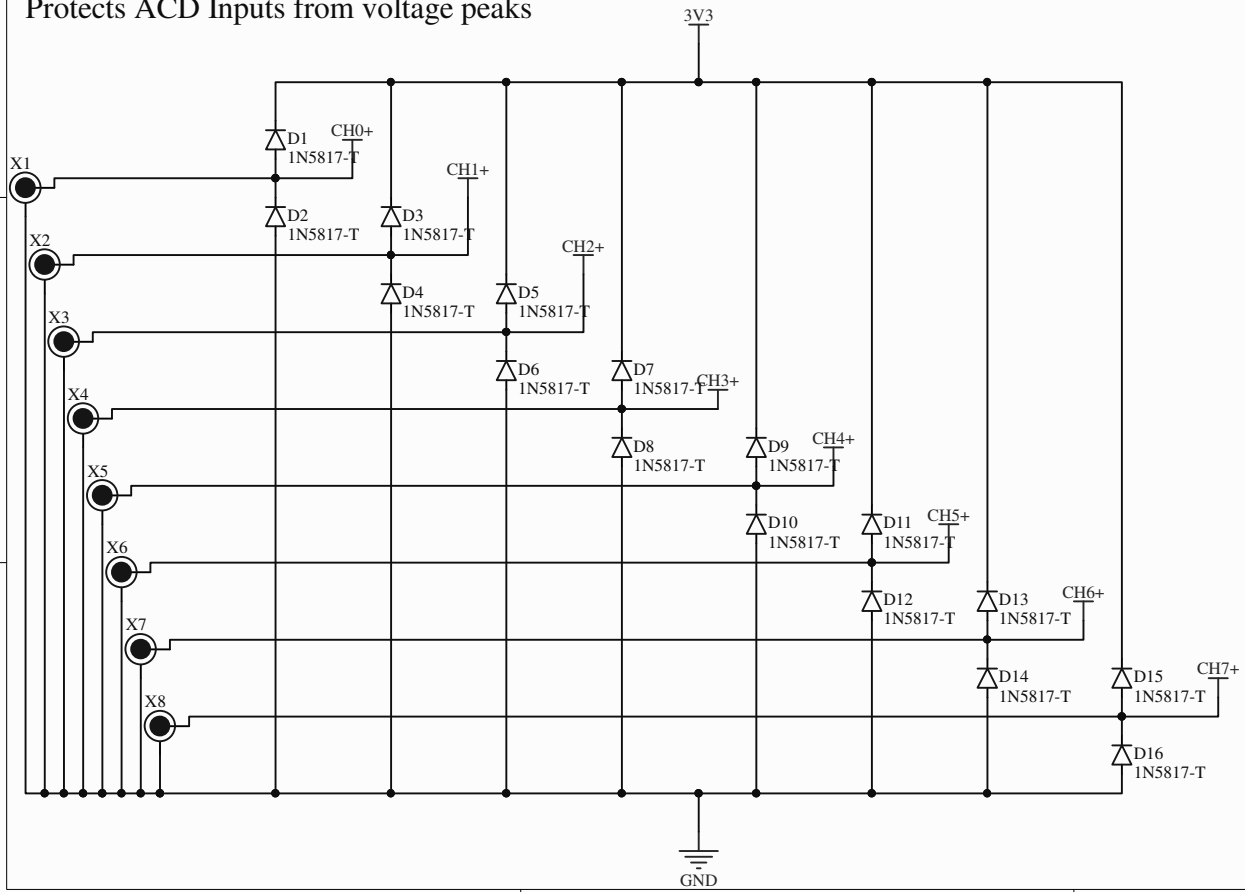

Voltage Divider for Reference Voltage

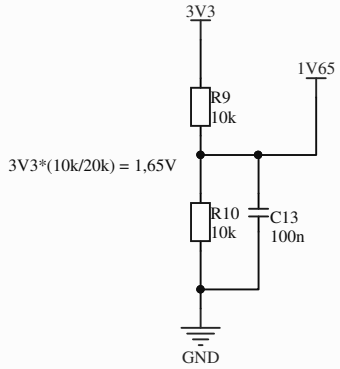

Title	Analog Design for Power-berry		
Size A4	Number		Revision 1
Date: 01/08/2021		Sheet of	
File: C:\Users\..\power-berry_analog.SchDoc		Drawn By:	