CHAPTER 3
LRFD BRIDGE DESIGN GUIDELINES

3.1 DESIGN CRITERIA

3.1.1 Design Specifications

3.1.1.1 All designs for highway bridges shall be performed in accordance with the latest edition of the following specifications, with current interims as of the date of the design, and as modified by this Bridge Manual.

1. American Association of State Highway and Transportation Officials (AASHTO), *LRFD Bridge Design Specifications.*

2. The Commonwealth of Massachusetts, Massachusetts Highway Department, *Standard Specifications for Highways and Bridges*.

3. AASHTO/AWS *Bridge Welding Code* (ANSI/AASHTO/AWS D1.5).

4. American Association of State Highway and Transportation Officials (AASHTO), *LRFD Bridge Construction Specifications.*

5. American Association of State Highway and Transportation Officials (AASHTO), *Guide Specifications for LRFD Seismic Bridge Design.*

3.1.1.2 All designs for pedestrian bridges shall be performed in accordance with the latest edition of the American Association of State Highway and Transportation Officials (AASHTO), *LRFD Guide Specification for the Design of Pedestrian Bridges*.

3.1.1.3 All designs for railroad bridges shall be performed in accordance with the latest edition of the American Railway Engineering and Maintenance-of-Way Association (AREMA), *Manual for Railway Engineering*.

3.1.2 Critical and Essential Bridges

For the design of bridges in Massachusetts, Critical and Essential Bridges are defined as those bridges that are:

1. On or over the following National Highway System (NHS) routes:
   a. Eisenhower Interstate System.
   b. Other NHS Routes.
   c. All STRAHNET Routes and Connectors.

2. On designated emergency evacuations routes.

Other bridges may be designated as Critical/Essential by local agencies if they need to be operational after a natural disaster or other event. MassDOT does not make any performance distinction between Critical and Essential bridges. Interactive maps of the National Highway System may be found on the

following website: http://www.fhwa.dot.gov/planning/national_highway_system/nhs_maps/.

3.1.3 Live Load

3.1.3.1 The minimum AASHTO design live load for all highway bridges, culverts, soil-corrugated metal structure interaction systems, and walls shall be full HL-93 loading, unless specified otherwise.

3.1.3.2 Existing highway bridges that are being rehabilitated shall be upgraded to meet the minimum design loading of Paragraph 3.1.3.1. Exceptions to this requirement shall require prior written approval from MassDOT.

3.1.3.3 Historic structures that are being rehabilitated may be exempted from complying with Paragraph 3.1.3.2 if the structure's inventory rating can be upgraded to meet the anticipated truck traffic loadings. These exemptions shall require prior written approval from MassDOT.

3.1.4 Design Methods

3.1.4.1 All new bridges and complete bridge replacements shall be designed using the Load and Resistance Factor Design (LRFD) method.

3.1.4.2 For bridge projects, such as deck replacement, bridge repair and bridge preservation projects, the latest edition of the *AASHTO Standard Specifications for Highway Bridges* may be used in place of the LRFD method. In this case, the minimum design live loading for the structure shall be HS-20; however every effort should be made to upgrade the structure for the HS25 live loading whenever possible.

3.1.4.3 To verify that the design will also provide adequate load carrying capacity for the Massachusetts posting vehicles, load rating calculations shall be performed in accordance with Chapter 7, Part I of this Bridge Manual as part of the design process and these calculations along with the rating summary shall be submitted with the Final Design Submission. The actual rating report, as described in Chapter 7, need not be submitted until the bridge has been constructed, the Initial Inventory Inspection performed and any design changes made during construction have been rated and incorporated into the final rating report.

3.1.5 Design Software

In order to verify program compliance, software used by consultants must be able to replicate the results of designs performed using the software MassDOT uses. Portions of programs not giving similar results will require hand computations to demonstrate conformance. MassDOT currently utilizes AASHTOWare™ Bridge Design as the standard software for the LRFD design of the following structure types:

- Reinforced concrete frames
- Reinforced concrete tee beams, slabs and I-beams
- Prestressed concrete deck beams, box beams, I-beams, NEXT beams and NEBT beams
- Steel rolled beams (including cover plates)
- Steel welded plate I-girders (including hybrid)

Designers shall consult with MassDOT as to the software to be used for the LRFD design of curved trapezoidal box girder and curved plate girder bridge superstructures.

3.1.6 Earth Pressure Computations

Earth pressure coefficient estimates are dependent on the magnitude and direction of wall movement. Unless documented otherwise in the approved Geotechnical Report, the following earth pressure coefficients shall be used in design:

- Cantilever walls not founded on rock or piles that are greater than or equal to 16' in height or any spread footing-supported gravity wall shall use K_a.
- Cantilever walls not founded on rock or piles that are less than 16' in height shall use $0.5(K_o + K_a)$.
- Counterfort walls, cantilever walls of any height, or gravity walls that are founded on rock or piles shall use K_o.

Where:

K_a = Active earth pressure coefficient;
K_o = At-rest earth pressure coefficient;

Active earth pressure coefficients (K_a) shall be estimated using Coulomb Theory. Passive earth pressure coefficients (K_p) shall be estimated using Rankine or Log Spiral Theory. Current MassDOT practice is to use the unit earth weight of 120 pcf in the calculation of earth pressures where more specific data is not available.

The earth pressure exerted against integral abutments shall be estimated in accordance with Section 3.10 of this Chapter.

3.1.7 Bridge Railings/Barriers

3.1.7.1 The standard MassDOT railings/barriers detailed in Chapter 9 of Part II of this Bridge Manual shall be used in accordance with the Table 3.1.7-1 below.

3.1.7.2 Railings/barriers other than the ones detailed in Chapter 9 of Part II of this Bridge Manual, may be used provided that the use of a non-standard MassDOT railing/barrier can be justified and that they have either been:

1. Crash tested in accordance with and have passed the requirements of NCHRP 350 or the AASHTO Manual for Assessing Safety Hardware (MASH) at a facility that specializes in the crash testing of highway safety appurtenances, or
2. Have otherwise been accepted for use on the NHS by FHWA, or
3. With prior approval by MassDOT, have undergone a computerized crash simulation in accordance with the requirements of NCHRP 350 or MASH and the simulation results indicate that the railing/barrier would pass the requirements of NCHRP 350 or MASH, at a facility that has been approved by FHWA to perform such computer simulations.

Railings/barriers that have not been crash tested, have not received approval from FHWA for use

on the NHS, or have not undergone a crash test simulation shall not be used on any MassDOT bridge project.

Railing/Barrier	Test Level	To Be Used	Application Notes
CT-TL2	NCHRP 350 TL-2	Non-NHS highways only with design speeds not exceeding 45 MPH	Off system bridges w/ or w/out pedestrians; no protective screen or snow screen is required.
S3-TL4	NCHRP 350 TL-4	NHS and Non-NHS highways, except limited access highways and their ramps	W/ or w/out pedestrians; must be used with Type I screen. No screen is required on bridges over water or terrain without transportation facilities.
CP-PL2	NCHRP 350 TL-4	NHS and Non-NHS highways, except limited access highways and their ramps	W/ or w/out pedestrians, mainly urban bridges and bridges over RR and all structures over electrified AMTRAK rail lines; must be used with either Type II screen or hand rail when pedestrians are allowed on the bridge or with a 4' high snow fence when pedestrians are not allowed on the bridge. No screens are required on bridges over water or terrain without transportation facilities.
CF-PL2	NCHRP 350 TL-4	NHS and Non-NHS highways, except limited access highways and their ramps	Bridges where pedestrians are prohibited by law; often on undivided state highway bridges; must be used with 4' high snow fence. No screen required on bridges over water or terrain without transportation facilities.
CF-PL3	MASH TL-5	NHS and Non-NHS limited access highways and their ramps	All Interstate and limited access state highway bridges; must be used with 3' high snow fence. No screen required on bridges over water or terrain without transportation facilities.

Table 3.1.7-1

3.1.7.3 WARNING. The geometry of the impact face of a railing or barrier is critical to its safe performance in an actual crash. Therefore, Designers are prohibited from altering or attaching anything to the impact face of a railing or barrier that has been crash tested and found to meet the performance requirements of either NCHRP 350 or MASH. If a standard crash tested railing or barrier cannot be used without modifications, the Designer shall confer with the Bridge Section to receive guidance on how to proceed.

3.1.7.4 Steel reinforcement for the deck slab overhangs shall be as per Chapter 9, Part II of this Bridge Manual. If the deck slab overhang exceeds the limits specified in the design tables of Chapter 7, Part II of this Bridge Manual, the Designer shall design the deck reinforcement in accordance with Chapter 13 of the *AASHTO LRFD Bridge Design Specifications* for the given test level of the railing/barrier system.

3.1.7.5 In cases where railings/barriers are mounted on top of U-wingwalls or retaining walls, the wall's stability and its stem design shall be as per Subsection 3.3.2 below.

3.1.8 Temperature

3.1.8.1 Uniform Temperature. Stresses and movements due to uniform thermal changes shall be calculated in accordance with the *AASHTO LRFD Bridge Design Specifications* for the Cold Climate temperature range using the following procedure, which is based upon AASHTO's Procedure A.

MassDOT bridge design practice is to use the "floating" bridge concept, where there is no defined fixed bearing. Thus for those bridges designed in accordance with these standards, the point of assumed zero movement shall be taken as the midpoint of the bridge beam, even when it is continuous over a pier. However, if the design requires that a defined fixed bearing be provided, then that bearing will be used as the point of zero movement. Continuous beam bridges with multiple fixed bearings along the length of the beam will require an equilibrium analysis to determine the thermal forces and displacements at each substructure unit. Since bridge members can be set at different ambient temperatures, the assumed ambient temperature for a temperature rise is different from that used for the temperature fall in order to maximize the range of one-way thermal movements to be used in design.

The maximum one-way thermal movement, δ_T, for the design of structural components shall be:

$$\delta_T = L\alpha\Delta T$$

Where:

L = the length of member from the point of assumed zero movement to the point where movement is to be calculated (in);

α = Coefficient of Thermal Expansion of member material:
- 0.0000065 for structural steel;
- 0.0000055 for concrete;

ΔT = for Structural Steel Members:
- 70°F temperature rise (from an assumed ambient temperature of 50°F)
- 100°F temperature fall (from an assumed ambient temperature of 70°F)

ΔT = for Concrete Members:
- 30°F temperature rise (from an assumed ambient temperature of 50°F)
- 70°F temperature fall (from an assumed ambient temperature of 70°F)

3.1.8.2 Temperature Gradient. The effects of a thermal gradient need not be considered for typical steel or concrete girder bridges with concrete or timber decks, for timber bridges, or for solid slab and deck beam bridges, as detailed in Parts II and III of this Bridge Manual.

3.2 BRIDGE FOUNDATIONS

3.2.1 General

The recommendations made in the Geotechnical Report shall form the basis for the selection and design of the foundations of the bridge structure. In addition to recommending the foundation type, this report also provides the site-specific design parameters, such as soil resistance, on which the foundation

design will be based. Pertinent recommendations from the Geotechnical Report regarding design and/or construction shall be included on the Construction Drawings and in the Special Provisions.

3.2.2 Pile Foundations

3.2.2.1 Pile foundations shall be designed in accordance with the provisions of the *AASHTO LRFD Bridge Design Specifications*. The Design Factored Resistance of piles shall be the lesser of the Factored Geotechnical Pile Resistance and the Factored Structural Pile Resistance.

The Factored Geotechnical Pile Resistance is the product of the Nominal Geotechnical Resistance of the pile and the corresponding Resistance Factor, as given in the *AASHTO LRFD Bridge Design Specifications*.

The Factored Structural Resistance is the product of the Nominal Structural Axial Resistance of the pile and the corresponding Resistance Factor, as given in the *AASHTO LRFD Bridge Design Specifications*.

The Design Factored Resistance of the pile shall be greater than the combined effect of the factored loading for each applicable load combination.

3.2.2.2 The pile length estimated by design should be adequate to develop the Nominal Resistance required by all limit states as well as the minimum penetration required for lateral stability, uplift, downdrag, scour, settlement, etc.

3.2.2.3 The additional following criteria shall be used as required:

1. Maximum batter on any pile shall be 1:3. When concrete piles are driven in clay, the maximum batter shall be 1:4.

2. The Geotechnical Report should recommend values for Lateral Resistance provided by vertical or battered piles. The geotechnical analysis, relating lateral resistance to deflection, should be performed based on unfactored loads.

3. Maximum spacing of piles shall be 10 feet on center; minimum spacing shall be 2.5 times the pile diameter, unless an alternate design is performed by the Designer and has been reviewed and approved by MassDOT.

4. Minimum distance from edge of footing to center of pile shall be 18 inches.

5. The center of gravity of the pile layout shall coincide as nearly as practical with the resultant center of load for the critical cases of loading.

6. Pile layouts of piers with continuous footings shall show a uniform distribution of piles. Exterior piles on the sides and ends of pier footings may be battered if required by design.

7. Steel pile-supported foundation design shall consider that piles may be subject to corrosion, particularly in fill soils, acidic soils (soils with low pH), and marine environments. Where warranted, a field electric resistivity survey, or resistivity testing and pH testing of soil and groundwater samples should be used to evaluate the corrosion potential. Steel piles subject to

corrosion shall be designed with appropriate thickness deductions from the exposed surfaces of the pile and/or shall be protected with a coating that has good dielectric strength, is resistant to abrasive forces during driving, and has a proven service record in the type of corrosive environment anticipated. Protective coating options include electrostatically applied epoxies, concrete encasement jackets, and metalized zinc and aluminum with a protective topcoat.

8. When roadway embankment is more than 10 feet in depth, holes should be pre-augured for all piles except H-piles.

3.2.2.4 Piles for integral abutment bridges shall be designed in accordance with the methods outlined in Subsection 3.10.11

3.2.3 Drilled Shafts

3.2.3.1 Drilled shafts shall be considered where cost and constructability may be favorable compared to spread footing or pile supported foundations. Anticipated advantages are the reduction of the quantities and cost of excavation, dewatering, and sheeting. Additionally, the use of drilled shafts may be beneficial in working within critical horizontal restrictions, or in limiting the environmental impact.

3.2.3.2 Design. Drilled shafts shall be designed in accordance with the requirements of the *AASHTO LRFD Bridge Design Specifications* and the following:

1. The Designer shall consider the intended method of construction (temporary or permanent casing, slurry drilling, etc.) and the resulting impact on the stiffness and resistance of the shaft.

2. If the pier column is an integral extension of the drilled shaft and the design assumes a constant diameter of the shaft and column throughout, it is imperative that either the shaft is constructed as designed or else the design evaluates alternate construction details where the shaft diameter varies along its length. In addition, since the subsurface and site conditions may cause the shaft to deviate from its specified location and plumbness, the design should also establish acceptable drilled shaft construction tolerances for these deviations to allow for the pier column to be constructed in the correct location with relation to the other pier columns and pier cap.

3. The lateral resistance and lateral load–deflection behavior of the drilled shaft shall be determined using soil-pile interaction computer solutions or other acceptable methods.

4. When a drilled shaft is constructed with a permanent casing, the skin friction along the permanently cased portion of the shaft should be neglected.

5. Continuous steel reinforcing shall be maintained whenever possible throughout the length of the shaft. Splices should be avoided in the longitudinal steel where practical. If splices in the adjacent longitudinal reinforcement are necessary, they shall be made with mechanical reinforcing bar splicers and shall be staggered a minimum of 2’-0”. Splices in the spiral confinement reinforcement shall, where necessary, be made with mechanical reinforcing bar splicers as well. The cover and detailing requirements specified in Chapter 3 of Part II of this Bridge Manual shall be satisfied.

Typically uncoated bars are acceptable in drilled shafts, however drilled shafts in harsh environments, such as marine installations, shall use coated bars.

6. The minimum clearance between reinforcing bars shall be 1⅞" and is equal to 5 times the maximum coarse aggregate size (⅜") for both, the longitudinal bars as well as the spiral confinement reinforcement, to allow for better concrete consolidation during placement. Concrete mix design and workability shall be consistent for tremie or pump placement. In particular, the concrete slump should be 8 inches ± 1 inch for tremie or slurry construction and 7 inches ± 1 inch for all other conditions.

7. When estimating the bar size and the maximum spacing (pitch) of the spirals using the applicable requirements of Articles 5.7.4.6 and 5.10.11.4.1d of the *AASHTO LRFD Bridge Design Specifications*, the following shall be considered when using the formula below:

$$\rho_s \geq 0.45\left(\frac{A_g}{A_c} - 1\right)\frac{f'_c}{f_{yh}}$$

In this formula, the A_g value shall assume that 3" of concrete clear cover is provided over the spiral instead of the minimum of 5" clear cover required. The 2" of additional cover is not needed for structural confinement of the shaft core, and is only provided to improve concrete flow during concrete placement.

Based on the above, Table 3.2.3-1 below provides all applicable Spiral Bar Size/Maximum Spiral Pitch combinations that satisfy the combined requirements for the maximum bar size (#6), the minimum clearance between bars (1⅞"), and the maximum coarse aggregate used (⅜").

For larger size drilled shafts, where different Spiral Bar Size/Maximum Spiral Pitch combinations may be required, the design of the reinforcing cage shall be submitted to the State Bridge Engineer for review and approval.

3.2.3.3 Special design and detailing is required where the drilled shaft is an extension of a pier column. In these situations column longitudinal reinforcement shall be extended into drilled shafts in a staggered manner to avoid a weakened section with a sudden change in stiffness.

3.2.3.4 For drilled shafts of bridges classified as SDC B, C, and D, the seismic detailing requirements for the plastic hinge region of the *Guide Specifications for LRFD Seismic Bridge Design* shall be satisfied.

Drilled Shaft Diameter, D (feet)	Spiral Bar Size	Maximum Spiral Pitch, s_{max} (in.)
3.0	# 5 # 6	3.1 4.4
3.5	# 5 # 6	3.1 4.5
4.0	# 5 # 6	3.2 4.5
4.5	# 5 # 6	3.2 4.6
5.0	# 5 # 6	3.1 4.4
5.5	# 5 # 6	2.8 3.9
6.0	# 5 # 6	2.5 3.5
6.5	# 6	3.2
7.0	# 6	3.0
7.5	# 6	2.8

Table 3.2.3-1: Spiral Bar Size/Maximum Spiral Pitch Combinations

3.2.4 Permanent and Temporary Support of Excavation

3.2.4.1 All permanent support of excavation that is to be left in place shall preferably be steel sheeting wherever feasible, be designated as permanent sheeting, be fully designed, and be shown on the Construction Drawings. A unit price item shall be provided for permanent sheeting in the estimate. The Designer shall verify the availability of the steel sheeting sections specified. The design shall include the following:

1. Plan view indicating horizontal limits of sheeting.

2. Cross-section indicating vertical limits of sheeting.

3. Minimum section modulus and minimum nominal yield strength of steel used.

4. Where a braced sheeting design is indicated, the design of the bracing and wales shall also be provided and shown with full dimensions on the Construction Drawings.

3.2.4.2 The Designer, in designing the sheeting, shall assume that the bottom of excavation may be lowered by 2 feet. This lowering may be due to over-excavation or removal of unsuitable materials.

3.2.4.3 All sheeting that is used in conjunction with a tremie seal cofferdam shall be left in place. The Designer shall design both the tremie seal and the cofferdam. The Designer shall indicate the depth and thickness of the tremie seal, and the horizontal and vertical limits of the steel sheeting for the

cofferdam.

3.2.4.4 For the design of the sheeting that is used as a cofferdam or as control of water, the Designer shall use a hydraulic analysis of the crossed waterway to determine the elevation of the water that the installation must safely withstand. This hydraulic analysis shall be performed in accordance with Section 1.3 using the design flood return period specified in Paragraph 1.3.3.3 for temporary construction related structures and shall take into account the reduction in the waterway cross section created by this structure. In addition, the Designer shall indicate on the Construction Drawings the elevation at which the cofferdam should be flooded in the event that the water outside the cofferdam rises above the design water elevation, thereby causing excessive hydrostatic pressure.

3.2.4.5 All permanent and temporary support of excavation that protrudes into the soil that supports the bridge structure shall be left in place. Supporting soil shall be defined as all soil directly below the footing contained within a series of planes that originate at the perimeter of the bottom of the footing and project down and away from the footing at an angle of 45° from the horizontal.

3.2.4.6 All permanent support of excavation required for the support of railroads shall preferably be steel sheeting and shall be designed by the Designer.

3.2.4.7 Whether support of excavation is indicated on the Construction Drawings or not, the Contractor shall be informed by the Special Provisions that any part of the support system that protrudes into the supporting soil below the bridge structure, as defined by Paragraph 3.2.4.5 above, shall be cut off and left in place and no additional payment will be made for this part.

3.2.5 Gravel Borrow for Bridge Foundations

3.2.5.1 Gravel Borrow for Bridge Foundation (Item 151.1) shall be assumed to have a soil friction angle (Φ) of 37˚. The nominal bearing resistance shall be estimated using accepted soil mechanics theories for stratified soils in accordance with applicable provisions of the *AASHTO LRFD Bridge Design Specifications*.

Gravel for this item will be permitted up to a height of 20 feet under the footings and shall be compacted in accordance with the MassHighway Standard Specifications for Highways and Bridges. In special cases, this depth may be increased. A study should be made in each case to show that its use will result in a more economical structure. Its use is not authorized for river structures or for placement under water.

3.2.6 Crushed Stone for Bridge Foundations

In general, this material is used where water conditions prevent the use of **GRAVEL BORROW FOR BRIDGE FOUNDATIONS**. The pressure on the granular soil below the crushed stone will govern the Bearing Resistance of the crushed stone. De-watering the area and using **GRAVEL BORROW FOR BRIDGE FOUNDATIONS** compacted in the dry, or not de-watering and using **CRUSHED STONE FOR BRIDGE FOUNDATIONS** shall be investigated for feasibility and economy.

3.2.7 Foundations on Rock

3.2.7.1 If the top of rock is comparatively level and is located at a shallow depth from the proposed

bottom of footing, then, for economy, consideration shall be given to lowering the footing so that it will be founded entirely on rock. The structural design of the footing shall assume a triangular or trapezoidal contact pressure distribution based upon factored loads. The maximum factored bearing pressure shall be compared to the factored bearing resistance to determine whether the bearing resistance is adequate.

3.2.7.2 If the bottom of footing will fall partly on rock and partly on satisfactory granular material, the Designer must ensure that the entire footing shall be founded on the same material throughout its bearing area. There are two strategies that can be employed depending on the rock profile and cost of the work. One strategy is to excavate the rock to a depth of about 18" below the bottom of footing and backfill with **GRAVEL BORROW FOR BRIDGE FOUNDATION**. The second strategy is to excavate the material above the rock and backfill with 3000 PSI, 1½ IN, 470 Cement Concrete to the bottom of proposed footing elevation. When using this second strategy, an additional amount of the rock shall be excavated as needed so that the minimum thickness of the Cement Concrete backfill shall be 6". If the subsurface exploration indicates that the top of rock surface is sloped, the Designer shall consider the possibility that the Cement Concrete backfill will slide on the rock under applied loads. Mitigation for sliding can include excavating additional rock as needed to provide stepped level bearing areas or providing dowels socketed into the rock to resist the sliding force. The Designer shall fully design the strategy to be used to insure the stability of the foundation system and shall provide all necessary details on the Construction Drawings.

3.2.7.3 The Geotechnical Report shall provide guidance on the engineering properties of weathered and/or deteriorated rock. The Designer shall use these properties to determine the feasibility of leaving the weathered and/or deteriorated rock in place as a foundation material or removing it and replacing it with either gravel borrow for bridge foundation or 3000 PSI, 1½ IN, 470 Cement Concrete, depending on cost. The Designer should evaluate if additional borings are required or feasible to delineate the limits of rock.

3.2.8 Pre-loaded Areas

3.2.8.1 Pre-loading or pre-loading with surcharge may be required to consolidate compressible soils and minimize long-term settlements under load. If unsuitable material is encountered, it shall be excavated prior to placing the embankment.

3.2.8.2 If the water table is higher than the bottom of excavation of unsuitable material, crushed stone shall be used in the embankment up to the proposed elevation of the bottom of footing, followed by the placement of gravel borrow for the embankment. Both of these materials shall be placed during embankment construction. The amount of anticipated settlement should be accounted for in the specified top elevation of the crushed stone beneath the proposed bottom of footing. The effect of the anticipated settlement shall be considered in the design of the superstructure.

3.2.9 Scour Considerations

3.2.9.1 General. As stated in Article 3.7.5 of the *AASHTO LRFD Bridge Design Specifications*, scour is considered a change in foundation conditions, and not a force itself. Because of that, the stability and load carrying capacity of the bridge structure must be checked using the load combinations in Table 3.4.1-1 of the Specifications assuming that all of the river bottom material at each substructure unit has been removed above the calculated depth of scour as specified in the Hydraulic Report. The requirements of Article 2.6.4.4 of the *AASHTO LRFD Bridge Design Specifications* shall apply as amended below.

3.2.9.2 Design Scour. All bridges shall be scour stable and available for use after the event under the calculated design scour. This requires that the bridge must meet all Strength, Serviceability and both Extreme Event Limit States with all applicable load and resistance factors specified for these limit states

3.2.9.3 Check Scour. All non-Critical/non-Essential bridges shall be scour stable at the calculated check scour but not necessarily available for use after a scour event. These bridges shall be designed for the Extreme Event II Limit State with a load factor = 0.0 for Live Load. All Critical/Essential bridges must be scour stable and available for limited use after the event under the calculated check scour. These bridges shall be designed for the Extreme Event II Limit State with a load factor = 1.0 for the HL-93 design load and dynamic load allowance.

3.2.9.4 Scour Countermeasures. For new bridges or full bridge replacements, the substructures shall be designed to meet the requirements of Paragraphs 3.2.9.2 and 3.2.9.3 for the calculated design and check scour without using scour countermeasures. However, these design requirements shall not negate the need to properly armor the bridge substructures against scour. This armoring shall be detailed and shown on the Construction Drawings.

For bridge rehabilitation or superstructure replacement projects or projects where the substructure units are to be retained, scour countermeasures may be used to address the scour stability if the existing substructures do not fully meet all of the design criteria above without them.

3.3 SUBSTRUCTURE DESIGN

3.3.1 General

3.3.1.1 Footings shall be proportioned in accordance with the standard details shown in Part II of this Bridge Manual and shall be designed for factored loads in accordance with the *AASHTO LRFD Bridge Design Specifications.* The passive resistance of the earth in front of a wall shall be neglected in determining local wall stability (overturning, sliding and bearing pressures). The stability of the wall during all stages of construction shall be investigated. Reinforced concrete keyways tied into footings shall preferably not be used to aid in the resistance to sliding due to the more complex construction sequence necessary to properly construct the key without disturbing the bearing soil for the rest of the footing.

3.3.1.2 Factored bearing pressures under the footings shall be calculated in accordance with the *AASHTO LRFD Bridge Design Specifications*. The weight of the earth in front of a wall shall be considered in computing soil pressure.

3.3.1.3 Approach Slabs. When approach slabs are used as detailed in Parts II and III of this Bridge Manual, the AASHTO's live load surcharge load on the abutment can be ignored.

3.3.1.4 In addition to the forces specified in the *AASHTO LRFD Bridge Design Specifications,* the non-seismic longitudinal forces for abutment design shall include the horizontal shear force developed by the bearings through either shear deformation (elastomeric bearings) or friction (sliding bearings).

3.3.1.5 Piers and abutments of a bridge over salt water will normally be protected with granite within the tidal range. The granite blocks shall be caulked with polysulfide caulking. Piers and abutments over fresh water do not require this protection unless the normal flow of water and seasonal water level

variations are anticipated to be large.

3.3.1.6 At a minimum, the reinforcing bars used in the following elements of the substructure require protection and, so, shall be epoxy coated: backwalls, beam seats, pier caps, and the HPC pour section of U-wingwalls. Also, when faces of abutments, piers, wingwalls, and retaining walls are within 30 feet of a traveled way, the reinforcing bars adjacent to those faces shall be epoxy coated. If all of the reinforcing bars in the given concrete pour are to be coated, and the coated bars will never come into contact with or are to be tied to non-coated bars, then galvanized bars may be used instead of epoxy coated bars. In these situations, the Construction Drawings shall designate these bars as COATED BARS, without specifying the coating type.

3.3.1.7 All piers and abutments within 30 feet of the edge of the travelled way shall be investigated for vehicular collision by using the procedure outlined in the *AASHTO LRFD Bridge Design Specifications* Commentary C3.6.5.1 to determine AF_{HPB}, the annual frequency for a bridge pier or abutment to be hit by a heavy vehicle. The actual ADTT for the road being investigated shall be used in the analysis. If the AF_{HPB} is less than 0.0001 for Critical/Essential bridges or 0.001 for all other bridges, the piers and abutments need not be designed for collision loads nor do they require the protection as specified in the *AASHTO LRFD Bridge Design Specifications* Article 3.6.5. If the AF_{HPB} is greater than these values, then the Designer has the option of either designing the substructure element for the collision load or providing protection as specified in the *AASHTO LRFD Bridge Design Specifications* Article 3.6.5.

If the pier or abutment is within 10 feet of the edge of travelled way, these substructure elements shall be designed for the collision load as specified in *AASHTO LRFD Bridge Design Specifications* Article 3.6.5 and distributed longitudinally and vertically as recommended in the Commentary to this Article, regardless of whether or not a barrier will be installed.

For MSE and other wall types which function as abutments by directly supporting a spread footing of a bridge stub abutment, the design requirement shall apply to the face panels, which shall be designed for the collision load so that a vehicular impact does not fail the panel, thereby compromising the backfill and consequently the bridge structure that relies on it for support. If the MSE or other wall type only retains the embankment soil and the bridge abutment has a separate foundation that does not rely on the MSE or other wall type for support, then the face panels do not have to be designed for the collision load.

For bridges over railroads, a crash wall shall be provided in accordance with the latest AREMA code or in accordance with the standards of the railroad company the bridge is over, if they are more stringent than AREMA. These crash walls shall be designed to either the *AASHTO LRFD Bridge Design Specifications* Article 3.6.5 collision load, the loads specified in AREMA, or loads specified by the railroad company the bridge is over, whichever is greater.

3.3.2 Walls: Abutments, Wingwalls, and Retaining Walls

3.3.2.1 Gravity walls. Walls of this type are used where low walls are required, generally up to 14' in height. When the wall is founded on sound rock the footing is omitted. The top of rock shall be roughened as necessary to provide resistance against sliding. A shear key may be provided, if necessary.

3.3.2.2 Cantilever walls. Generally, this wall type is used in the intermediate height range (14' to 30') applications between gravity and counterfort walls. In those situations where a wall starts in the height range prescribed for cantilevered walls but tapers down into the height range prescribed for gravity walls, the cantilevered wall type will be used throughout instead of changing to a gravity type in mid-wall. Footings for wall segments of variable height shall be designed using a wall height equal to the low-end wall height plus 75% of the difference in height between the low end and high end.

When designing the reinforcement in the toe of the footing, the weight of the soil above the toe shall not be used to offset the force of the upward soil pressure. The reinforcement in the heel of the footing shall be designed to carry the entire dead load of all materials above the heel, including the dead load of the heel. The effect of the upward soil pressure or pile reaction will not be used to offset this design load.

3.3.2.3 Counterfort walls. A counterfort wall design shall be considered for retaining structures and abutments higher than 30 feet. However, the economics and constructability of a counterfort wall versus a similar height cantilevered wall with a thicker stem shall be investigated.

If a railing/barrier is mounted on top of a counterfort retaining wall, the top of the wall should be detailed as a longitudinal beam that spans from counterfort to counterfort and is rigidly attached to the counterfort. The railing/barrier should be mounted on top of this beam and the beam should be designed for all of the impact loads and load effects (moment, shear, torsion) that the railing/barrier will impart as given for the Test Level of the railing/barrier in Chapter 13 of the *AASHTO LRFD Bridge Design Specifications*. The design of this beam should assume that it is unsupported between counterforts, and therefore any contribution from the wall panel should be neglected. The stability of the wall and the design of the counterfort reinforcement shall be checked in accordance with Paragraph 3.3.2.4.

3.3.2.4 Railings/barriers mounted on top of walls. In cases where railings/barriers are mounted on top of U-wingwalls or retaining walls, the Designer shall check the local wall stability (overturning, sliding and bearing pressures) and the stem design for vehicular collision load using the Extreme Event II Limit State. The vehicular collision force shall be 10 kips distributed over a length of 5 feet (or 2 kips per foot uniform load over the 5 foot length) applied at a distance equal to the height of the railing/barrier above the top of the wall. This load is based on the results of NCHRP Report 663.

For checking local stability, in addition to all other applicable dead and live load effects, the vehicular collision load shall be distributed down to the footing at a 1:1 slope and shall have a load factor of 1.0. The design horizontal earth pressure from the retained soil need not be considered (γ_p = 0) to act concurrently with this load, because the wall is considered to pull away from the backfill in the instant the collision occurs and the soil does not have the time to respond before the collision is removed.

For checking the wall stem design, in addition to all applicable dead and live load effects, apply the horizontal earth pressure with γ_p = 1.0, and the vehicular collision load. For the purpose of this analysis, the vehicular collision load shall be distributed down to the footing as a constant width strip (similar to the live load surcharge distribution). The horizontal earth pressure is used here not because it acts concurrently with the collision load but because the horizontal earth pressure has already induced a strain in the reinforcing bars. The strain from the collision load adds to this strain, which results in the total strain in the rebar, and hence the total stress. Thus the horizontal earth

pressure is used here to estimate that strain.

For barriers placed on top of MSE wall systems, the methodology outlined in NCHRP Report 663 shall be used to design the barrier and moment slab system as well as to design the MSE wall.

3.3.3 Piers

3.3.3.1 Piers for most structures are typically of reinforced concrete construction. Piers for grade separation structures are typically open type bents with columns. Piers for structures over railroads can be either a solid stem type or an open type bent with a crash wall conforming to AREMA requirements for pier protection, depending on an economic analysis. Piers for structures over water are typically a solid stem type. Piers for trestle type structures are typically pile bents.

3.3.3.2 For open type bents, the bottom of the pier cap is normally level. However, if the height of one end of the pier cap exceeds 1.5 times the height of the cap at the other end, then the bottom of the pier cap may be sloped to stay within these limits.

3.3.3.3 The columns shall be assumed as fully fixed at the footing, and the pier shall be designed as a rigid frame above the footing. Continuous footings founded on granular material or on piles shall be designed as continuous beams. Individual footings shall be used on ledge.

3.3.3.4 The uncracked section properties shall be used for the analyses (determination of the design load effect) of non-seismic loadings for columns, while the design of the section should be conducted assuming cracked or uncracked section, based on and consistent with, the anticipated behavior. Reduced stiffness of the section should be used for the analysis of the effects of slenderness and deflection on the design forces, as specified in Articles 4.5.3.2.2 and 5.7.4.3 of the *AASHTO LRFD Bridge Design Specifications*.

3.3.3.5 Live load shall be positioned on the bridge deck so as to produce maximum stresses in the pier. To determine the maximum live load reactions on a pier, the live load shall be as provided in Article 3.6.1.3.1 of the *AASHTO LRFD Bridge Design Specifications*. The multiple presence factors and the dynamic load allowance of the *AASHTO LRFD Bridge Design Specifications* Articles 3.6.1.1.2 and 3.6.2.1, respectively, shall apply. Stringer reactions resulting from dead and live loads (plus dynamic load allowance) shall be considered as concentrated loads on the pier cap.

3.3.4 Reinforced Concrete Box Culverts

3.3.4.1 General. Designs of Reinforced Concrete Cast-in-Place and Precast Box Culverts shall conform to the requirements of Article 12.11 of the *AASHTO LRFD Bridge Design Specifications*. The construction and installation of these structures shall conform to Section 27, “Concrete Culverts”, of the *AASHTO LRFD Bridge Construction Specifications*.

3.3.4.2 Standard Box Sections. Precast Concrete Box Culverts shall be used whenever possible. Standard dimensions, reinforcing, and detailing for single-cell Precast Concrete Box Culverts shall be as per design tables of the Standard Specification for Precast Reinforced Concrete Monolithic Box Sections for Culverts, Storm Drains, and Sewers Designed According to the AASHTO LRFD (ASTM C1577-08).

For multi-cell culverts composed of single-cell box units, means of positive lateral bearing by continuous contact between the sides of adjacent boxes shall be provided. Compacted earth fill, granular backfill, flowable fill, or grouting between the units are considered means of providing such positive bearing.

3.3.4.3 Non-Standard Box Sections. If special design for sizes and/or loads other than those specified in the design tables of the Standard Specification for Precast Reinforced Concrete Monolithic Box Sections for Culverts, Storm Drains, and Sewers Designed According to the AASHTO LRFD (ASTM C1577-08) is necessary, it shall be based on the criteria as specified in Paragraph 3.3.4.1 above and the following.

3.3.4.4 Criteria for Loads and Live Load Distribution. Reinforced Concrete Cast-in-Place and Precast Box Culverts shall be designed for the applicable loads as specified in Table 3.4.1-1 of the *AASHTO LRFD Bridge Design Specifications*. The following load combinations should be considered:

1. Maximum vertical load on the roof and maximum outward load on the walls:
   $DC_{max} + EV_{max} + EH_{min} + (LL+IM)_{max} + WA_{max}$

2. Minimum vertical load on the roof and maximum inward load on the walls:
   $DC_{min} + EV_{min} + EH_{max}$

3. Maximum vertical load on the roof and maximum inward load on the walls:
   $DC_{max} + EV_{max} + EH_{max} + (LL + IM)_{max}$

The HL-93 design live loading shall be the design truck or the design tandem without the lane load as per Article 3.6.1.3 of the *AASHTO LRFD Bridge Design Specifications*.

The dynamic load allowance (IM) for culverts and other buried structures shall account for the depth of fill over the culvert and shall be taken as per Article 3.6.2.2 of the *AASHTO LRFD Bridge Design Specifications*. It shall be ignored for fill heights more than 8 feet.

For box section with less than 2 feet of fill, live loads shall be distributed to the top slab of culverts as specified in Article 4.6.2.10 of the *AASHTO LRFD Bridge Design Specifications*. For culverts with 2 feet of cover or greater, the distribution of live loads shall be as per Article 3.6.1.2.6 of the *AASHTO LRFD Bridge Design Specifications*.

For single-cell culverts, the effects of live load may be neglected where the depth of fill is more than 8 feet and exceeds the span length; for multi-cell culverts, the effects may be neglected where the depth of fill exceeds the distance between faces of end sidewalls. For both single-cell and multi-cell culverts with a skew angle of 15˚ or greater, live loads shall be applied for all depths and shall not be cut off at any preset depth.

The earth pressure shall be based on a minimum and maximum equivalent fluid pressure of 30 pcf and 60 pcf, respectively. Lateral earth pressure from weight of earth above and adjacent to a box section shall be taken as 0.5 times the vertical pressure. This value should be increased by the load factor of 1.35 for the maximum lateral earth pressure used in design. The box sections shall also be evaluated for a minimum lateral earth pressure, which may result in increased steel areas in certain locations of the culvert. The *AASHTO LRFD Bridge Design Specifications* allows for a 50% reduction

in the lateral earth pressure in lieu of applying a minimum earth load factor of 0.9. This results in a minimum lateral earth pressure design value of 0.25 times the maximum vertical earth pressure. This minimum value is 50% of the maximum value.

A soil-structure interaction factor of Article 12.1.2.2 of the *AASHTO LRFD Bridge Design Specifications* shall be applied to related earth loads.

In addition, the Designer shall take into consideration the potential for construction activities, such as heavy equipment movement or stockpiling of material over or adjacent to a box culvert that can induce loads in addition to the ones specified above.

3.3.4.5 Haunches. The vertical and horizontal haunch dimensions shall be equal to the sidewall thickness. The provisions of Article 12.11.4.2 of the *AASHTO LRFD Bridge Design Specifications* shall apply.

3.3.4.6 Bedding and Backfill.Standard installation practices of Section 27 of the *AASHTO LRFD Bridge Construction Specifications* shall be followed. Sidesway of the structure shall be ignored in the design of culverts provided that the fill placed around the structure shall be deposited on both sides to approximately the same elevations at the same time. No hydrostatic effect on the culvert shall be considered in design.

3.4 SEISMIC ANALYSIS AND DESIGN

3.4.1 Design Requirements

3.4.1.1 General. The goal of a seismic design can best be summarized as providing a ductile structure that will not collapse, although it may sustain significant damage. This desired performance of a bridge structure under a seismic event is primarily dependent on the ductility of the bridge elements and the provision for the dissipation of earthquake energy in a controlled manner that will not cause sudden catastrophic failure of the main load supporting elements, supplemented with, but not entirely replaced by, a static structural design based on forces and displacements of an assumed earthquake. Therefore MassDOT stresses good detailing and the use of Earthquake Resisting Systems (ERS) even for bridges that are classified as SDC A, and requires that most SDC A bridges be detailed in accordance with higher SDC requirements where shown in Figures 3.4.3-1 through 3.4.3-4. The standard MassDOT "floating bridge," or a superstructure fully carried on elastomeric bearings without defined fixed or expansion bearings, is in reality an ERS with the elastomeric bearings providing some measure of isolation. This standard concept relies on the keeper blocks, shear keys and backwalls to withstand the required displacement that must be accommodated in the substructure, and these components are designed elastically to do so.

The standard bearing assembly as detailed in Chapter 8 of Part II of this Bridge Manual provides for the "floating bridge" concept and shall be used wherever possible, especially for new bridges. However, in cases where it is not feasible to provide keeper blocks, shear keys and backwalls as restraints (e.g. bridge preservation projects), bearings with anchor bolts may be allowed as seismic restraints provided that the seismic ground acceleration coefficient A_S is less than 0.05. If allowed, they shall be designed per Paragraph 3.5.7.1 below and detailed as shown in Chapter 8 of Part II of this Bridge Manual. This restriction is due to the fact that anchor bolts, in reality, provide discrete restraint points and not a continuous restraint to the superstructure. For higher seismic accelerations,

superstructure displacement motion may not load all anchor bolts uniformly, which may result in some anchor bolts being overstressed and potentially failing, which can contribute to a progressive failure of the other anchor bolts and subsequently to the loss of restraint of the bridge superstructure.

3.4.1.2 As specified in Subsection 3.1.1 of this Bridge Manual, all seismic analysis and design of bridges shall be performed in accordance with the *AASHTO Guide Specifications for LRFD Seismic Bridge Design.* Unless otherwise noted, these Guide Specifications shall be used instead of the seismic provisions in the *AASHTO LRFD Bridge Design Specifications*. In lieu of the simplified method contained in the *AASHTO Guide Specifications for LRFD Seismic Bridge Design* for bridges in SDC A, either a more refined Single-Mode Spectral Analysis or a Multi-mode Spectral Analysis, depending on the complexity of the structure, may be used to determine the seismic demand for the earthquake design of conventional, regular and historic structures. If Designers use the more refined analysis method, they shall model the structure including the bearings based on the actual anticipated behavior of the structure. For most bridges falling into this category, this additional effort is not justified. However for large structures, with long spans and large dead loads, the more reasonable seismic demands based on this more refined analysis could result in substructure construction savings. If a multi-mode spectral analysis is used to determine the seismic demand, all subsequent design shall be done in accordance with the *AASHTO Guide Specifications for LRFD Seismic Bridge Design* and in accordance with the requirements of the Paragraphs that follow.

3.4.1.3 Critical/Essential bridges in Massachusetts shall be designed for a seismic hazard corresponding to a Two Percent Probability of Exceedance in 50 years (approximately 2500-year Return Period). A site-specific hazard analysis is not automatically required for Critical/Essential bridges, except in those situations described in Paragraph 3.4.2.3, since the enhanced performance is obtained through the modified SDC C detailing to ensure ductile behavior where shown in Figures 3.4.3-2 and 3.4.3-4.

3.4.1.4 Background. The Guide Specifications differ from the procedures provided in the *AASHTO LRFD Bridge Design Specifications* in that they use a displacement-based design approach, instead of the traditional, force-based "R-factor" method. This new approach allows for a more accurate calculation of the actual seismic capacity of a bridge than by using the ductility estimates implied in the R-factors. The application of this method varies from a simplified implicit displacement check procedure to a more rigorous pushover assessment of displacement capacity depending on the Seismic Design Category (SDC) that has been assigned. SDC for each bridge is based on the Design Spectral Acceleration Coefficient at 1.0- sec period (S_{D1}) which is the product of the site coefficient (F_v) and the spectral acceleration (S_1).). Seismic Design Categories vary from SDC A through SDC D.

3.4.1.5 Seismic Design Strategy (SDS). The MassDOT standard is a Ductile Substructure with an Elastic Superstructure, or a Type 1 SDS as defined in the *AASHTO Guide Specifications for LRFD Seismic Bridge Design*. As noted in Paragraph 3.4.1.1 above, the standard MassDOT floating bridge structure, as detailed in Parts II and III of this Bridge Manual, can behave as a Type 3 isolation SDS, even though it is not specifically designed as such. For this reason, the MassDOT floating bridge structure shall be the first choice for new construction for conventional bridges.

In order to ensure ductile behavior, all substructures regardless of SDC shall be designed using the Limited-Ductility Response method as defined in the *AASHTO Guide Specifications for LRFD*

Seismic Bridge Design Article 4.7.1 (i.e. "ductility demand" $\mu_D \leq 4.0$). In addition, the Local Displacement Capacity check specified in *AASHTO Guide Specifications for LRFD Seismic Bridge Design* Article 4.8.1 shall be performed. For bridges classified as SDC A and SDC B, the Designer shall use the SDC B Equation 4.8.1-1 and, for bridges classified as SDC C, the SDC Equation 4.8.1-2 regardless of the detailing requirement called for in the Paragraphs below. The minimum 15 foot clear height limitation for a column that is being checked by these equations shall not apply to standard MassDOT multi-column piers due to the fact that the ductility demand is usually low.

If the seismic design of a bridge structure would benefit from the use of an isolation system, the Designer can take the standard MassDOT floating bridge concept and, by providing isolation elements and allowing for the anticipated displacement demand without engaging the shear keys, backwalls and keeper blocks, to design the bridge elements to be an isolated Type 3 SDS with the prior approval of the State Bridge Engineer. Seismic isolation can be achieved through either the use of PTFE Bearings that reduce the inertial superstructure forces on the substructure, elastomeric bearings that can accommodate the anticipated seismic displacements or full isolation bearings that allow for energy dissipation. The request for using a Type 3 SDS shall include the proposed seismic isolation strategy and the methodology for accommodating the anticipated seismic displacements without engaging the substructure.

Type 2 SDS shall not be used for the design of MassDOT bridges unless the Designer can demonstrate that using this SDS will result in a structure that will have an enhanced seismic performance versus a Type 1 or Type 3 SDS and that the ductile elements in the pier cross frames shall not suffer irreparable damage during a seismic event.

3.4.2 Seismic Hazard Maps

3.4.2.1 For all non-Critical/non-Essential bridges, conventional and non-conventional, the seismic hazard maps provided in the *AASHTO Guide Specifications for LRFD Seismic Bridge Design* shall be used. These maps represent a seismic hazard corresponding to a Seven Percent Probability of Exceedance in 75 years (approximately 1000-year Return Period). The map of The Horizontal Response Spectral Acceleration Coefficient for the Conterminous United States at Period of 1.0 second (S_1) in this series indicates that this acceleration coefficient for Massachusetts varies between approximately 2.7 and 4.1 percent of "g" for a reference Site Class B. As a result, the vast majority of bridges in Massachusetts will be classified as SDC A; however since bridges located adjacent to the Vermont - New Hampshire border see higher accelerations, they may fall into a higher SDC depending on the soil type.

3.4.2.2 For all Critical/non-Essential bridges, conventional and non-conventional, the maps depicting the 2500-year return accelerations that shall be used for analysis and design are attached as an Appendix to Part I of this Bridge Manual. The three maps in this Appendix were taken from the USGS website and were edited to show just the accelerations in Massachusetts. They are analogous to the 1000-year return seismic hazard maps found in the *AASHTO Guide Specifications for LRFD Seismic Bridge Design* since they provide the same three data points that are needed to construct the Design Response Spectrum using the General Procedures outlined in Article 3.4.1 in the Guide Specifications. Once the Designer constructs the Design Response Spectrum for the 2500-year return design seismic event, all subsequent analysis and design will be done in accordance with the *AASHTO Guide Specifications for LRFD Seismic Bridge Design*.

3.4.2.3 For all non-conventional, certain not regular and historic structures, a site specific seismic hazard analysis shall be used in place of the seismic hazard maps noted in Paragraphs 3.4.2.1 and 3.4.2.2 to determine the actual accelerations at the bridge site. These accelerations shall be for either the 2500-year or 1000-year return period earthquake, depending on whether the bridge is Critical/Essential or not. A site-specific seismic hazard analysis may also be used for conventional and/or regular bridges and for bridge rehabilitation projects if the expense of such analysis is economically justified or as required in the Guide Specifications for soils that fall into Site Class F.

3.4.3 Analysis and Design Methodology

3.4.3.1 Figures 3.4.3-1 through 3.4.3-4 below depict the general analysis and design flowcharts for the seismic analysis and design of bridges in Massachusetts.

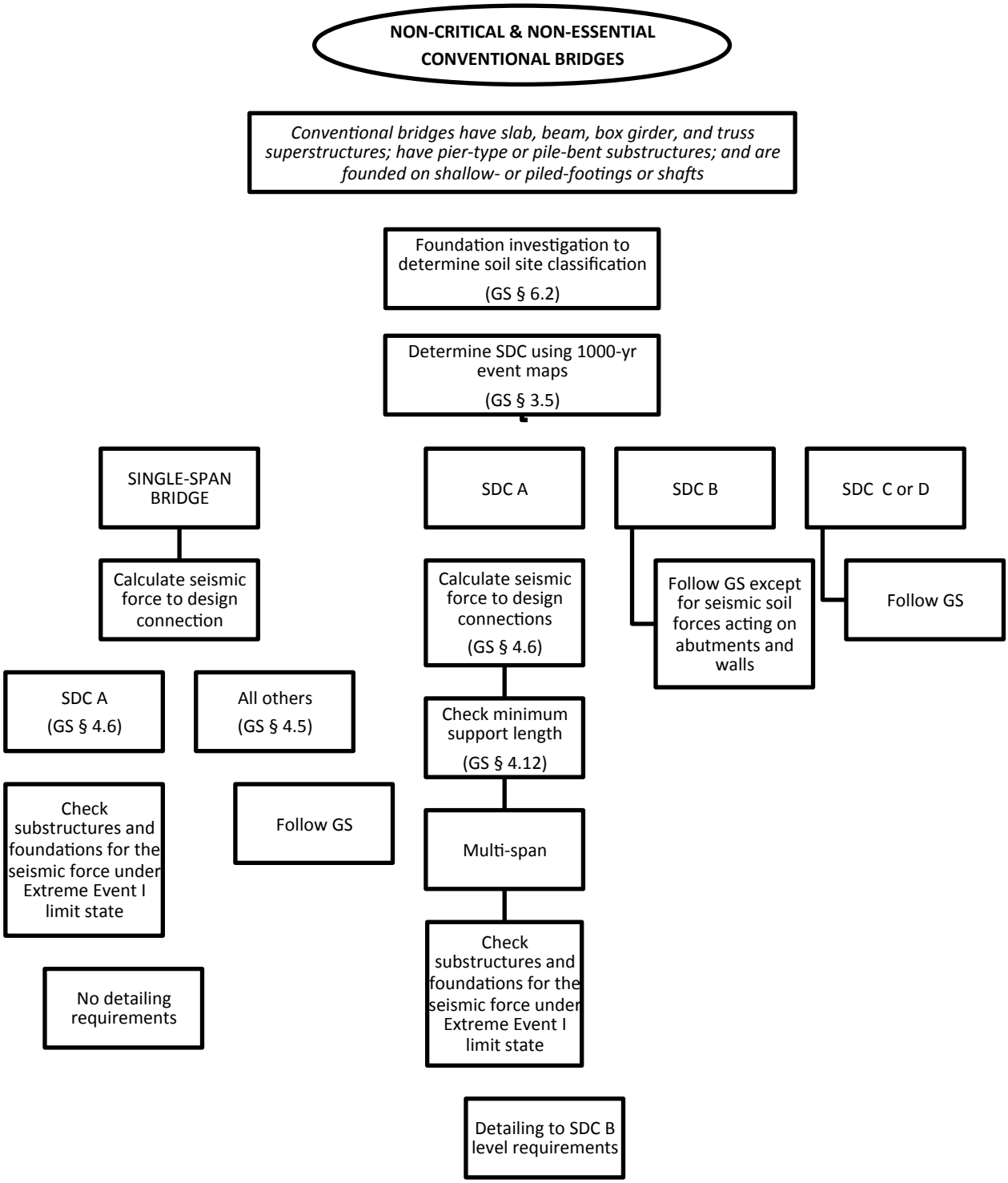
NON-CRITICAL & NON-ESSENTIAL CONVENTIONAL BRIDGES
Conventional bridges have slab, beam, box girder, and truss superstructures; have pier-type or pile-bent substructures; and are founded on shallow- or piled-footings or shafts
Foundation investigation to determine soil site classification (GS § 6.2)
Determine SDC using 1000-yr event maps (GS § 3.5)
SINGLE-SPAN BRIDGE
SDC A
SDC B
SDC C or D
Calculate seismic force to design connection
Calculate seismic force to design connections (GS § 4.6)
Follow GS except for seismic soil forces acting on abutments and walls
Follow GS
SDC A (GS § 4.6)
All others (GS § 4.5)
Check minimum support length (GS § 4.12)
Check substructures and foundations for the seismic force under Extreme Event I limit state
Follow GS
Multi-span
No detailing requirements
Check substructures and foundations for the seismic force under Extreme Event I limit state
Detailing to SDC B level requirements

Figure 3.4.3-1

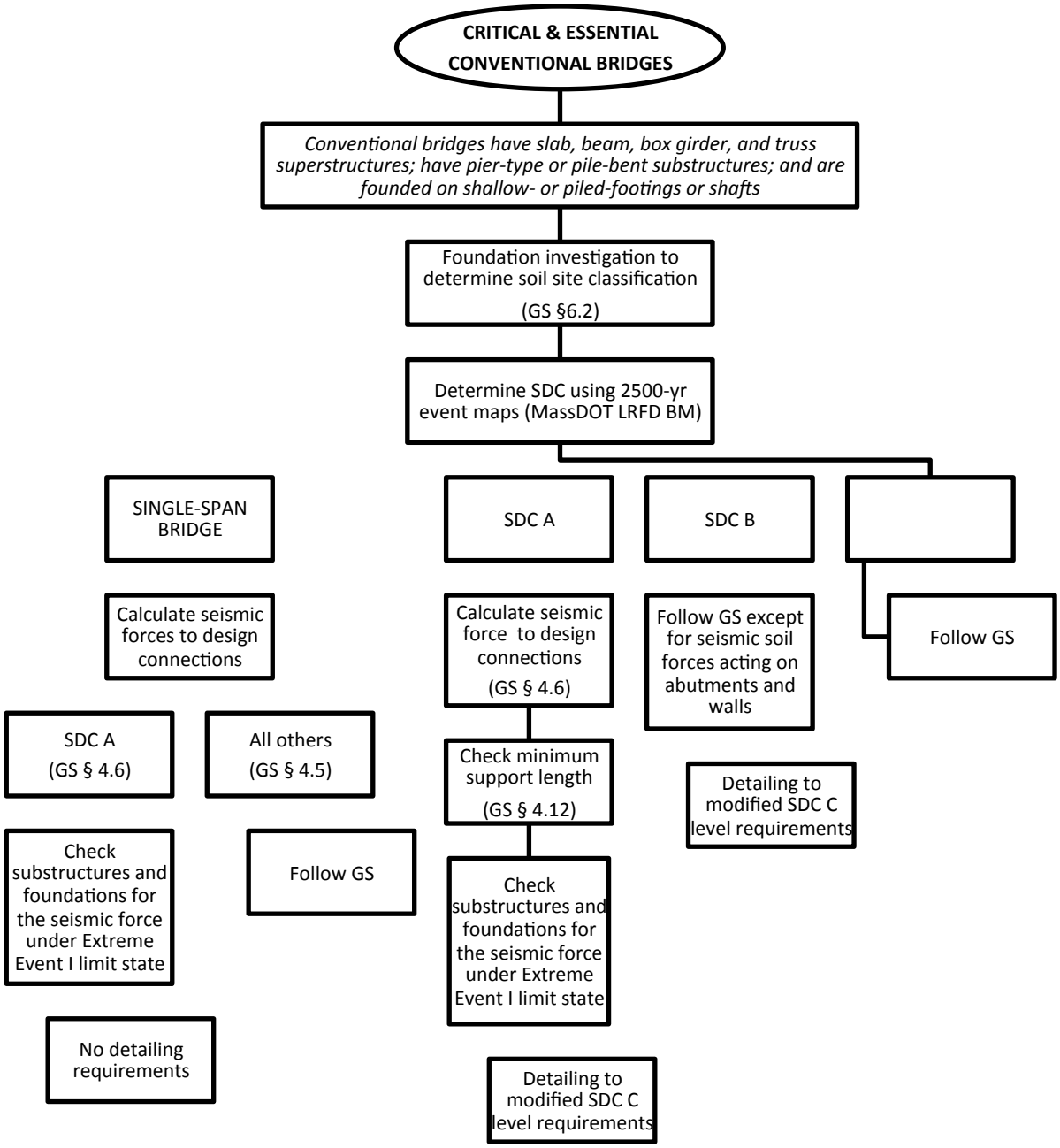
CRITICAL & ESSENTIAL CONVENTIONAL BRIDGES
Conventional bridges have slab, beam, box girder, and truss superstructures; have pier-type or pile-bent substructures; and are founded on shallow- or piled-footings or shafts
Foundation investigation to determine soil site classification (GS §6.2)
Determine SDC using 2500-yr event maps (MassDOT LRFD BM)
SINGLE-SPAN BRIDGE
SDC A
SDC B
Calculate seismic forces to design connections
Calculate seismic force to design connections (GS § 4.6)
Follow GS except for seismic soil forces acting on abutments and walls
Follow GS
SDC A (GS § 4.6)
All others (GS § 4.5)
Check minimum support length (GS § 4.12)
Detailing to modified SDC C level requirements
Check substructures and foundations for the seismic force under Extreme Event I limit state
Follow GS
Check substructures and foundations for the seismic force under Extreme Event I limit state
No detailing requirements
Detailing to modified SDC C level requirements

Figure 3.4.3-2

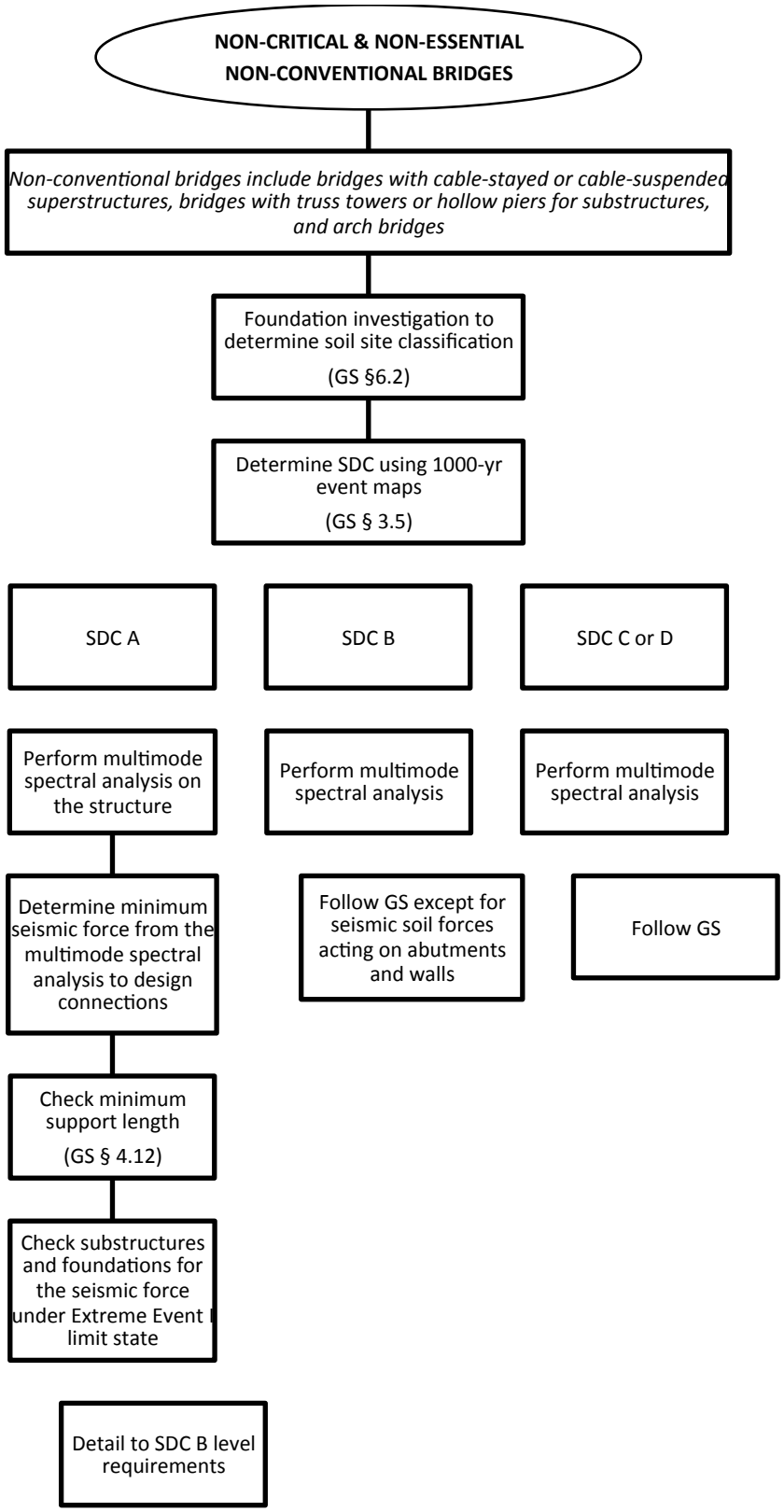
NON-CRITICAL & NON-ESSENTIAL
NON-CONVENTIONAL BRIDGES
Non-conventional bridges include bridges with cable-stayed or cable-suspended superstructures, bridges with truss towers or hollow piers for substructures, and arch bridges
Foundation investigation to determine soil site classification
(GS §6.2)
Determine SDC using 1000-yr event maps
(GS § 3.5)
SDC A
SDC B
SDC C or D
Perform multimode spectral analysis on the structure
Perform multimode spectral analysis
Perform multimode spectral analysis
Determine minimum seismic force from the multimode spectral analysis to design connections
Follow GS except for seismic soil forces acting on abutments and walls
Follow GS
Check minimum support length
(GS § 4.12)
Check substructures and foundations for the seismic force under Extreme Event I limit state
Detail to SDC B level requirements

Figure 3.4.3-3

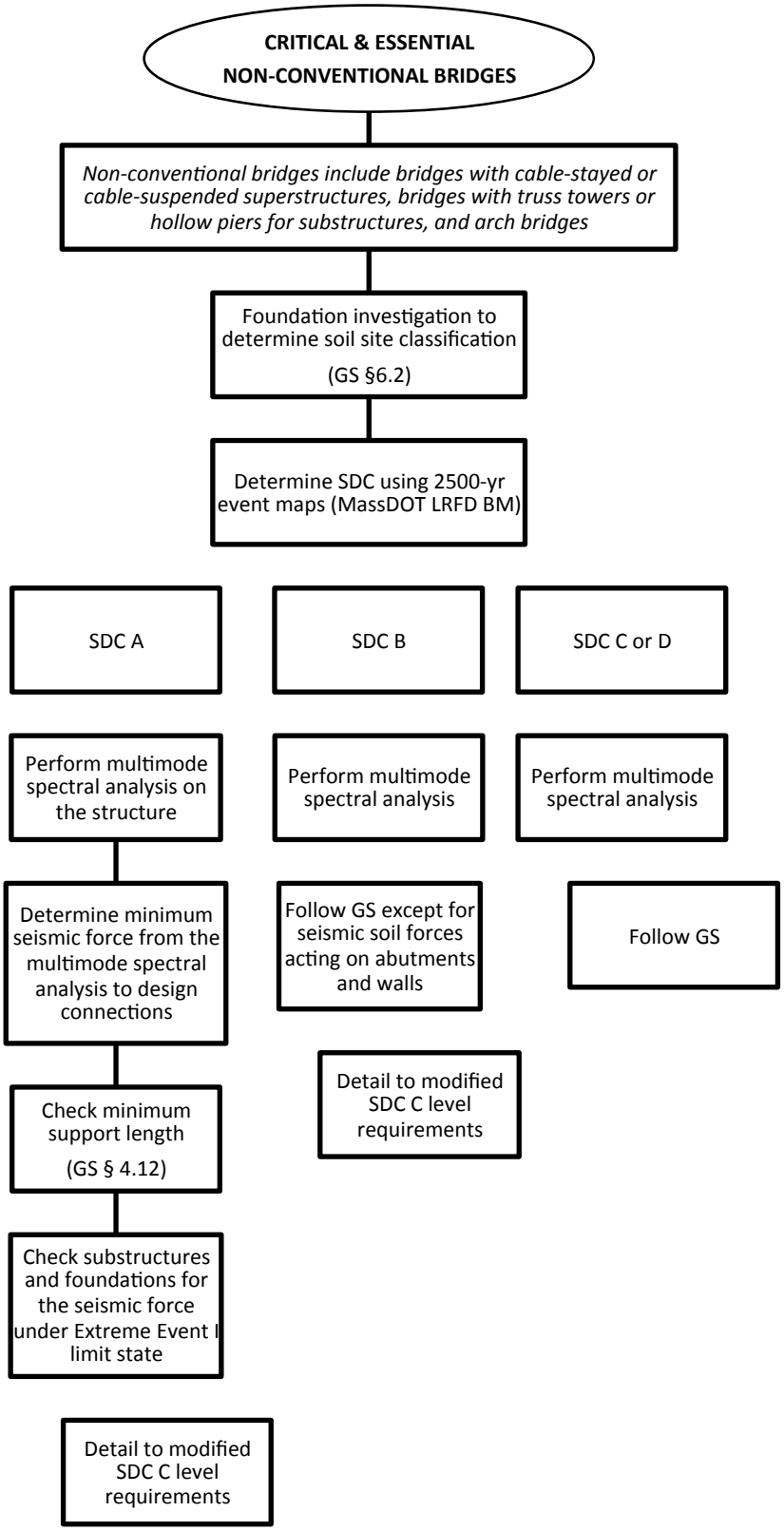
CRITICAL & ESSENTIAL
NON-CONVENTIONAL BRIDGES
Non-conventional bridges include bridges with cable-stayed or cable-suspended superstructures, bridges with truss towers or hollow piers for substructures, and arch bridges
Foundation investigation to determine soil site classification
(GS §6.2)
Determine SDC using 2500-yr event maps (MassDOT LRFD BM)
SDC A
SDC B
SDC C or D
Perform multimode spectral analysis on the structure
Perform multimode spectral analysis
Perform multimode spectral analysis
Determine minimum seismic force from the multimode spectral analysis to design connections
Follow GS except for seismic soil forces acting on abutments and walls
Follow GS
Detail to modified SDC C level requirements
Check minimum support length
(GS § 4.12)
Check substructures and foundations for the seismic force under Extreme Event I limit state
Detail to modified SDC C level requirements

Figure 3.4.3-4

3.4.3.2 The Load Factor for Live Load γ_{EQ} shall be taken as 0.0. This is based upon research conducted at the University of Nevada, Reno (Center for Civil Engineering and Earthquake Research), which concluded that at low amplitude motions, with shear keys still intact, the live load on the bridge actually had a beneficial effect. However once the shear keys failed, the performance of the structure would be closer to the no-live load case.

3.4.3.3 For conventional bridges classified as SDC A and single-span bridges regardless of SDC, a detailed seismic analysis to determine the design earthquake loading is not required. Nevertheless, the following minimum design and detailing requirements shall be satisfied:

- The superstructure/substructure connections shall be designed both longitudinally and transversely to resist a horizontal seismic force as specified in Articles 4.5 and 4.6 of the *AASHTO Guide Specifications for LRFD Seismic Bridge Design* for single-span bridges and bridges classified as SDC A, respectively. Connections are defined as those members that transfer shear or shear and axial loads between one component and another. Generally, they include reinforced concrete shear keys, keeper blocks, backwalls, and/or anchor bolts of bearing devices, if used.

- For bridges classified as SDC A, the forces shall be applied through the abutment and into the foundation by applying the horizontal seismic force as calculated above both longitudinally and transversely using the Extreme Event I Limit State from the *AASHTO LRFD Bridge Design Specifications* Table 3.4.1-1 and using a γ_p =1.0 and a Resistance Factor ϕ =1.0.

- For single-span bridges classified as SDC B, C, or D, the procedures provided in the *AASHTO Guide Specifications for LRFD Seismic Bridge Design* shall be used to check the abutments for seismic loads into the foundations.

- The minimum support lengths shall be checked in accordance with Article 4.12 of the *AASHTO Guide Specifications for LRFD Seismic Bridge Design.*

3.4.3.4 For conventional multi-span bridges classified as SDC A, the horizontal seismic forces shall be calculated for each substructure unit as specified in Article 4.6 of the *AASHTO Guide Specifications for LRFD Seismic Bridge Design* and shall be used to design the connections. These forces shall also be applied through the substructure unit and into the foundation both longitudinally and transversely using the Extreme Event I Limit State from the *AASHTO LRFD Bridge Design Specifications* Table 3.4.1-1 with a γ_p =1.0 and a Resistance Factor ϕ =1.0. The reinforcing bars for the piers shall be designed and detailed in accordance with the requirements for SDC B.

3.4.3.5 For conventional multi-span bridges classified as SDC B, C or D, a seismic analysis shall be performed in accordance with the *AASHTO Guide Specifications for LRFD Seismic Bridge Design* in order to determine the earthquake demand for the design and detailing of the substructures.

3.4.3.6 For all Critical/Essential conventional bridges, the procedures outlined in Paragraphs 3.4.3.3, 3.4.3.4 and 3.4.3.5 shall be followed except that the SDC classification of the bridge and the seismic response spectrum to be used shall be derived from the 2500-year return hazard maps. In addition, the reinforcing bars for the piers shall be designed and detailed in accordance with the requirements of

AASHTO Guide Specifications for LRFD Seismic Bridge Design Articles 8.6, 8.7 as modified below, and 8.8 as modified below for SDC C except that the SDC B elastic seismic forces shall be used instead of the SDC C forces associated with the overstrength moment. The requirements of Article 8.7.2 shall only apply to bridges that are actually classified as SDC C or SDC D and not to those that are actually classified as SDC A or SDC B but that are being detailed to a higher level for improved ductility. For checking the requirements of Article 8.8.12 and Article 8.8.13, the SDC B elastic seismic forces shall be used instead of the moments derived from 1.25 times the overstrength moment of the embedded column.

3.4.3.7 For all non-conventional bridges, an Earthquake Resisting System (ERS) and Earthquake Resisting Elements (ERE) shall be identified in accordance with Chapter 3 of the *AASHTO Guide Specifications for LRFD Seismic Bridge Design*. "Permissible ERS and ERE with Owner's approval" require prior approval by the State Bridge Engineer before being used in a design.

A multi-mode spectral analysis shall be performed on the structure. This analysis will provide the modal shapes, displacements and forces for the primary natural frequencies of the superstructure that will be used to design the individual elements of the superstructure and their connections. All connections shall be designed elastically. The return period for determining the accelerations to be used will depend on whether the bridge is Critical/Essential or not. The forces and displacements derived from this analysis shall also be used with the appropriate SDC procedures in the *AASHTO Guide Specifications for LRFD Seismic Bridge Design* to design the substructures and foundations.

For the seismic analysis of substructures of non-conventional bridges in SDC A, the forces generated by the multi-mode spectral analysis shall be applied through the substructure and into the foundation for the Earthquake Loading by applying the horizontal earthquake forces both longitudinally and transversely using the Extreme Event I Limit State from the *AASHTO LRFD Bridge Design Specifications* Table 3.4.1-1 and using $\gamma_p = 1.0$ and a Resistance Factor $\phi = 1.0$.

For non-Critical/non-Essential bridges, the reinforcement for piers shall be detailed in accordance with the requirements of SDC B. For Critical/Essential bridges, this reinforcement shall be designed and detailed in accordance with the requirements of *AASHTO Guide Specifications for LRFD Seismic Bridge Design* Articles 8.6, 8.7 as modified below, and 8.8 as modified below for SDC C except that the SDC B elastic seismic forces shall be used instead of the SDC C forces associated with the overstrength moment. The requirements of Article 8.7.2 shall only apply to bridges that are actually classified as SDC C or SDC D and not to those that are actually classified as SDC A or SDC B but that are being detailed to a higher level for improved ductility. For checking the requirements of Article 8.8.12 and Article 8.8.13, the SDC B elastic seismic forces shall be used instead of the moments derived from 1.25 times the overstrength moment of the embedded column.

3.4.3.8 Resistance to Sliding and Overturning. For bridges classified as SDC A, the check for resistance to sliding and overturning shall be based on the Extreme Event I load and resistance factors. For bridges classified as SDC B, the check for sliding and overturning shall be as outlined in the *AASHTO Guide Specifications for LRFD Seismic Bridge Design* except that elastic seismic forces shall be used instead of the overstrength moment. For bridges classified as SDC C or D, the check for sliding and overturning shall be as outlined in the *AASHTO Guide Specifications for LRFD Seismic Bridge Design*.

3.4.3.9 For the seismic analysis of the reinforced concrete bridge components (columns, caps, etc.) the effective (reduced due to cracking) properties of the section shall be used as per Article 5.6 of the *AASHTO Guide Specifications for LRFD Seismic Bridge Design*.

The use of effective stiffness will generally increase the period of vibration of the structure and consequently may decrease the forces depending on the shape of the design response spectrum. However, the displacements will be increased, which may be critical in evaluating seat lengths, bearing movement capacities and P-Δ effects. Thus, although some conservatism in force level may be lost by using effective stiffness in the analysis, more realistic displacements and more accurate forces will result.

3.4.3.10 For superstructure replacement projects or bridge rehabilitation projects, the Designer shall analyze the existing substructure units using the procedures specified above as if this were a new bridge. If this analysis indicates that the substructure does not have the capacity for these seismic loads, a seismic isolation Earthquake Resisting System using elastomeric or PTFE bearings may help the structure meet this demand should be considered. In addition, the detailing requirements need not be greater than what is required for the SDC classification of the bridge, i.e. SDC A detailing for bridges classified as SDC A, SDC B detailing for bridges classified as SDC B, etc.

For those structures where the re-use of the existing substructure units is essential, the expense of performing a multi-mode spectral analysis, alone or in combination with a site specific hazard analysis, can be justified since it may lower the seismic demand to a level that the existing substructure units can meet, or can be cost effectively upgraded to meet the demand. These accelerations should be used to analyze the inertial effects of the substructures.

3.4.4 Substructure Inertia and Seismic Soil Forces

3.4.4.1 For bridges classified as SDC A and single-span bridges regardless of SDC, if the Designer is using the horizontal seismic superstructure forces as specified in Articles 4.5 and 4.6 of the *AASHTO Guide Specifications for LRFD Seismic Bridge Design*, the substructure inertia forces and seismic soil forces need not be included in the design of the substructure units.

3.4.4.2 For bridges classified as SDC A or B and for single-span bridges regardless of SDC where the seismic accelerations were derived from a site specific hazard analysis, the substructure design shall also include the inertial forces of the pier or abutment wall and the soil forces as outlined below. The horizontal seismic acceleration to be used to calculate these forces shall be taken as follows:

- For abutments on spread footings that can displace horizontally, the horizontal acceleration to be used for the analysis shall be taken as $0.5A_s$.
- For abutments on piles or on drilled shafts, including integral abutments, the horizontal acceleration to be used for the analysis shall be taken as A_s without any reduction.
- For piers, the horizontal acceleration to be used for the analysis shall be taken as A_s without any reduction.

For the design of the abutment, the inertial wall forces and soil forces shall be applied as follows:

1. Abutment pulling away from the backfill: full abutment wall inertial force as calculated above plus the active soil force (based on K_a) in conjunction with the seismic superstructure force in the same direction.

2. Abutment pushing into the backfill: full abutment wall inertial force as calculated above counteracted by not more than 70% of the seismic passive soil pressure in conjunction with the seismic superstructure force in the same direction.

For the design of the piers, the pier inertia forces shall be applied in conjunction with the superstructure force acting in the same direction consistent with the seismic model being used.

Foundation rocking of substructure elements is not an acceptable strategy for accommodating seismic demands for new structures.

3.4.4.3 For bridges classified as SDC C or D, the application of substructure inertia and seismic soil forces shall be in accordance with the provisions of the *AASHTO Guide Specifications for LRFD Seismic Bridge Design*.

3.4.4.4 In addition to the design requirements of Paragraphs 3.4.4.1 and 3.4.4.2, semi-integral abutments, where the superstructure end diaphragm overhangs the back of the abutment, shall also be checked for resistance to overturning from 100% of the seismic active soil force calculated by the Mononobe-Okabe method. The accelerations used shall be those given in Paragraph 3.4.4.2. The superstructure shall only impart vertical reaction loads and shall not provide any horizontal restraint nor shall the seismic superstructure force be used in conjunction with the seismic soil forces. If this seismic demand is greater than the calculated Strength Limit demand, the abutment reinforcing shall be re-designed for these higher forces.

This additional requirement for semi-integral abutments is to ensure that this type of abutment has sufficient resistance to overturning during a seismic event. Since the superstructure cannot act as a strut because there is no backwall for it to engage, this type of abutment must rely on its own stability to prevent it from tipping over and resulting in the failure of the bridge structure.

3.4.4.5 For superstructure replacement projects or bridge rehabilitation projects, when analyzing substructures founded on piles, determining the amount of ductility in the pile system so that they can withstand the increased level of displacement will also allow a reduction of the horizontal acceleration of 50%.

In addition, for piers on spread footings, allowing them to rock on their footings is an acceptable strategy for accommodating seismic demands.

3.4.4.6 Background. Abutments on spread footings are allowed a reduction in the horizontal acceleration because recent work under NCHRP Report 611 has concluded that a permanent ground displacement associated with a horizontal acceleration of $0.5A_s$ will in most cases be less than 1 to 2 inches. This is typically the dimension that is provided the MassDOT standard details before the abutment backwall engages the end diaphragm of the superstructure. Abutments on piles are considered to be restrained from movement and so the full acceleration coefficient A_s is used since this will develop the most shear force effect on the piles and will provide a conservative design

where the piles will not fail below ground.

The use of only the wall inertia and the active static soil pressure are prescribed in consideration of the recent research that indicates that seismic soil forces and inertia wall forces are out of phase in their application to the abutment. Furthermore, seismic soil forces are not used because for them to develop, shearing of the soil mass would be required. Considering the intensity of the type of earthquake that would be experienced in Massachusetts and its duration of shaking, there is low probability that the seismic soil force, as predicted by Mononobe-Okabe, would develop. The load case specified, wall inertia force with the active soil force, has a greater probability of occurring during a Massachusetts earthquake. The passive soil pressure limitation is based on the limitations for using the passive abutment resistance as a Permissible Earthquake Resisting Element.

3.4.5 Modeling and Design of Bridge Bearings for Seismic Analysis

3.4.5.1 Ductile Substructure, Type 1 SDS. The distribution of forces for bridges with elastomeric expansion bearings (including elastomeric bearings that are not bonded to sole and masonry plates) should be based on the assumption that none of the bridge bearings will slide during the seismic event. This is the typical normal assumption for the distribution of seismic forces to substructure units for the standard MassDOT "floating bridge". When using the simplified method, bearings shall be assumed to be pinned at each substructure unit in each direction, longitudinal and transverse, in the analysis. Keeper blocks/shear keys/backwalls (and anchor bolts where allowed) shall be placed on substructure units consistent with the presumed restraint direction (longitudinal and/or lateral) of the superstructure used in the analysis.

If the superstructure is not restrained in the longitudinal direction at the piers with shear keys (or anchor bolts if allowed), the backwall of each abutment shall be designed to act as the longitudinal restraint for the entire bridge superstructure. The backwalls shall be designed for the full seismic force from the superstructure for the case where the superstructure is driving into the retained soil. This is intended to cover the case where the elastomeric bearings are assumed to slip. The abutments shall be designed for the forces induced by shear deformation of the elastomeric bearings from the displacement of the superstructure under seismic loading and this load shall be applied in the direction assuming the superstructure is driving away from the retained soil. This is intended to cover the case where the bearings are assumed not to slip.

If the superstructure is positively restrained in the longitudinal direction at the piers with shear keys (or anchor bolts if allowed) so that the superstructure cannot displace more than the restraining pier, the abutment backwall need not be designed for seismic forces if the gap between the bridge superstructure and the backwall is greater or equal to 2 times the calculated longitudinal seismic displacement of the restrained superstructure. The abutments shall still be designed for seismic forces as distributed according to the first paragraph above.

3.4.5.2 Seismic Isolation, Type 3 SDS. For all bridges, isolation bearings shall be designed in accordance with the latest *AASHTO Guide Specifications for Seismic Isolation Design*. True isolation bearings shall be designed to permit the superstructure to undergo the calculated seismic displacements without restraint from the substructure and shall act as energy dissipating elements. When it is deemed appropriate, it may be permitted to design conventional steel reinforced elastomeric bearings as isolation bearings. Design of these bearings as isolation bearings shall follow the requirements of the Seismic Isolation Guide Specifications.

3.4.5.3 Partial Seismic Isolation, Combined Type 1 and Type 3 SDS. PTFE bearings designed with sliding surfaces that are allowed to slide during a seismic event shall be modeled as true frictionless bearings. However, the substructures under the sliding bearings shall still be checked for the friction force that develops at the bearing when the superstructure slides on it during the seismic event. Although this friction force can be modeled explicitly in a refined model, this is not desired since it will reduce the design seismic forces on the restraining elements by the amount of the friction force. The true frictionless case is intended to model the situation where the superstructure experiences a vertical acceleration component in addition to the horizontal, which reduces the vertical force of the superstructure on the bearing, which, in turn, reduces the friction force.

The coefficient of friction between sliding surfaces during a seismic event is not well defined in the *AASHTO Guide Specifications for LRFD Seismic Bridge Design*. In lieu of testing the bearing, the forces for checking the substructure units may be calculated as 50% of the static design coefficient of friction. The use of PTFE sliding bearings will require superstructure restraint at some substructure units to prevent a loss of support failure. Typically the use of PTFE sliding bearings for seismic isolation would be targeted to substructure elements within a bridge that are incapable of resisting the seismic loads and redistributing them to other more robust substructure elements that are more capable of resisting the loads, for example, in a bridge rehabilitation project isolating slender piers and redistributing the seismic loads to the abutments.

3.4.5.4 Unique Bearings, Type 1 and/or Type 3 SDS. Typically for large-scale proprietary bearings, such as multi-rotational disc bearings, the bearing to be constructed shall be designed by the manufacturer chosen by the Contractor. Also, these types of bearings are typically used in larger bridge structures. The choice of fixed, expansion, sliding or isolation bearings shall be established as part of the overall bridge SDS and the thermal expansion/contraction requirements of the bridge structure. In these cases the final bearing configurations will not be fully known at the time of the design. Therefore, to permit the completion of the design, bearing manufacturers shall be contacted for seismic performance and expansion characteristics to be used and that information incorporated into the seismic analysis and substructure design.

3.4.6 Seismic Design of Wingwalls and Retaining Walls

3.4.6.1 For wingwalls and free standing retaining walls classified as SDC A or B a seismic analysis is not required. For walls classified as SDC C or D, the seismic soil forces shall be used.

3.4.6.2 Walls, including MSE and other wall types, that provide direct support to a bridge stub abutment shall be designed for the seismic soil forces acting on the wall and the inertial forces of the wall as well as the superstructure seismic forces that are transmitted from the stub abutment, regardless of SDC. For all SDCs, this superstructure seismic force shall be equal to the acceleration coefficient, A_S, times the tributary permanent load of the superstructure. For example, for a multi-span bridge where there is a longitudinal shear key at the pier to help share the longitudinal seismic force, this tributary permanent load would extend to the mid point of the span from the abutment to the pier. This more stringent requirement is applied to these walls because the *AASHTO LRFD Bridge Design Specifications* specify that a wall shall be designed for seismic loads if it provides support to a structure that has to be designed for seismic loads. The reasoning behind this requirement is that if this wall suffers a failure or partial failure in a seismic event, this will compromise the bridge structure that is supported by the wall.

If the MSE or other wall type retains the embankment soil only and the bridge abutment has an

independent foundation that does not rely on it for support (such as in the case of pile supported abutment or an abutment sitting on drilled shafts), then these walls do not have to be designed for seismic loads.

3.5 SUPERSTRUCTURE DESIGN

3.5.1 Composite Design

3.5.1.1 All stringer bridges will be designed compositely with the deck. All beams shall be designed for composite action without the use of temporary intermediate supports during the placing and curing of the deck concrete. Composite section properties shall be calculated based on the short-term modular ratio (n) or long-term modular ratio (3n), where:

$$n = \frac{E_B}{E_C}$$

In the above formula, E_B is the Modulus of Elasticity of the beam material (either steel or precast concrete), and E_C is the Modulus of Elasticity of the cast-in-place concrete deck.

3.5.1.2 When calculating any composite section properties, the depth of the standard haunch as detailed in Part II of this Bridge Manual shall conservatively be assumed to be zero. This is due to the fact that actual depth of the haunch varies depending on the amount of over-cambering in the beam.

3.5.1.3 For steel beams, when calculating stresses due to dead loads acting on the composite section, the effect of creep will be considered by using the long-term modular ratio as specified in Article 6.10.1.1.1b of the *AASHTO LRFD Bridge Design Specifications*. For precast prestressed concrete beams, the same composite properties shall be used for calculating both superimposed dead load and live load stresses.

3.5.1.4 For continuous beam design it is the policy of MassDOT that regardless of deck stress levels the 1% minimum area of reinforcement shall be placed in negative moment regions as per Article 6.10.1.7 of the *AASHTO LRFD Bridge Design Specifications*. Also, deck stresses shall be checked to determine if an area of steel in excess of 1% is required, in which case it shall be provided.

3.5.1.5 Stud shear connectors shall be used for composite steel beams. The pitch of the studs need not be made in multiples of the spacing of transverse steel reinforcement in the deck slab and it should be based on fatigue requirements. The total number of studs provided must be adequate for the strength limit state requirements in accordance with Article 6.10.10.4.1 of the *AASHTO LRFD Bridge Design Specifications*. For continuous beam design it is the policy of MassDOT that stud shear connectors shall be used throughout the length of the continuous composite beams in the positive and negative moment regions.

3.5.1.6 When designing continuous composite steel girders for Strength Limit States, the moments along the girder length shall be distributed assuming gross section properties of the composite girder; however, in the negative moment region, the composite section consisting of the steel girder and the longitudinal reinforcement within the effective width of the concrete deck only, shall be used to check the girder.

3.5.1.7 Appendices A6 and B6 of the *AASHTO LRFD Bridge Design Specifications*. Due to the narrow range of application, the provisions of Appendix A6 to determine the flexural resistance of

straight composite sections in negative flexure should not be used for MassDOT projects and the steel girder sections shall be proportioned according to the provisions of the *AASHTO LRFD Bridge Design Specifications,* Article 6.10.8. However, Designers may use the design procedure of Appendix B6 for the redistribution of moment from the negative to the positive moment regions.

3.5.1.8 If the superstructure is comprised of simple span precast beams made continuous for live load, the top longitudinal reinforcement should be designed according to Article 5.14.1.4.8 of the *AASHTO LRFD Bridge Design Specifications*.

3.5.1.9 Precast concrete beams designed compositely shall use dowels casted into the beams and subsequently embedded into the deck slab to transfer the horizontal shear. These dowels shall be detailed as shown in Part II and Part III of this Bridge Manual and shall be designed in accordance with Article 5.8.4.2 of the *AASHTO LRFD Bridge Design Specifications* requirements for shear-friction (interface shear) for composite flexural members.

3.5.2 Deck Slabs

3.5.2.1 Steel reinforcement and deck slab thickness shall be as per the design tables of Chapter 7, Part II of this Bridge Manual. If the beam spacing falls outside of the table limits, the deck slab reinforcement shall be designed using the traditional approximate method of analysis identified in *AASHTO LRFD Bridge Design Specifications* Article 9.7.3, not the empirical deck design method shown in Article 9.7.2. The deck shall be treated as a continuous beam. Moments as provided in *AASHTO LRFD Bridge Design Specifications* Table A4-1 are to be applied at the design sections identified in Article 4.6.2.1.6 of the *AASHTO LRFD Bridge Design Specifications*.

Steel reinforcement for the deck slab overhangs shall be as per the design tables of Chapter 7, Part II of this Bridge Manual. If the deck slab overhang exceeds the limits specified in the tables, the Designer shall design the deck reinforcement in accordance with Chapter 13 of the *AASHTO LRFD Bridge Design Specifications* for the given test level of the railing/barrier system.

All deck reinforcement shall be coated (either epoxy coated or galvanized).

3.5.2.2 Deck slabs with or without hot mix asphalt wearing surface shall be constructed using high performance concrete (HPC). Membrane waterproofing and a hot mix asphalt wearing surface shall be used on bridges where all portions of the deck have profile grades of 4% or less. Decks without membrane waterproofing and hot mix asphalt wearing surface shall be constructed in one single full-depth placement. The top ¾" of such placements shall be considered sacrificial and shall not be used when calculating the section properties.

3.5.2.3 Stay-in-place (SIP) forms shall be used for deck construction over rivers, active railroad tracks and roadways that will remain open to the public during construction, except as noted below.

The locations on typical bridge decks where SIP forms are prohibited and removable forms shall be used are as follows:

- In the deck bays, full length of the bridge, which are directly under the curb or barrier lines.
- In the deck bays, full length of the bridge, where there are longitudinal stage construction joints.

- For the forming of end diaphragms and overhanging portions of the deck slab.
- At the locations of scuppers and downspouts.
- Within a distance of 4' on both sides of the deck transverse construction joints.

3.5.2.4 Top-of-form elevations must be provided in order to set the forms such that, after all dead loads have been applied, the top of roadway will be at the correct profile elevation. Top-of-form elevations will be calculated as follows:

1. Calculate the theoretical top of roadway elevation directly over the beam at the required points along its span as specified in Part II of this Bridge Manual.

2. From this elevation, subtract the thickness of the wearing surface and deck to obtain the in-place bottom of deck elevation, neglecting the thickness of the membrane waterproofing.

3. To the in-place bottom of deck elevation, add the total dead load deflection of the beam, excluding the deflection due to the beam's self-weight, calculated for the particular point along the beam under consideration. The result is the top-of-form elevation.

3.5.2.5 Link slabs may be used to eliminate deck joints at piers where each span is supported on elastomeric bearings without anchor bolts. A link slab is comprised of a reinforced concrete deck with a length that extends approximately 5% to 7% of each adjacent span, not necessarily the same percentage for each span. Shear stud connectors shall be omitted within the limits of the link slab and a bond breaker is applied between the top flange and the link slab to prevent composite action. The total number of shear stud connectors per span required to meet strength requirements shall still be provided. Only spray applied membrane waterproofing shall be used on decks with link slabs.

The link slab reinforcing is designed as outlined in the design procedure that follows to minimize crack widths based on the anticipated strains due to live load rotations for an interior girder. If required by design, transition zones adjacent to the link slab shall provide a tension lap splice between the link slab longitudinal reinforcement and the deck longitudinal reinforcement.

Link Slab Design Procedure:

1. Design adjacent spans as simply supported neglecting the proposed link slab.

2. Determine the length of the link slab using approximately 5% to 7% of each span length. The link slab requires debonding from the girder and thus no shear stud connectors shall be provided.

3. Determine the end rotations of the girders from the beam design under service (unfactored) live loads. If the software used does not provide end rotations, the end rotations can be determined using the midspan deflections. The end rotation may be estimated as equal to $3.2*\Delta_{LL} / L$.

4. Calculate the negative moment in the link slab due to service load rotations, M_a, using the gross section properties of the link slab. Calculate cracking moment of link slab, M_{cr} [Ref. 1, *AASHTO LRFD Bridge Design Specifications,* Article 5.7.3.6.2-2]. If $M_a > M_{cr}$ then cracks can be expected in the link slab and additional reinforcement is required.

5. Design the reinforcement for the link slab to resist the applied moment using working stress methods and check the control of cracking criteria per *AASHTO LRFD Bridge Design Specifications* Article 5.7.3.4. Use γ_e, of 0.75 for Class 2 exposure condition. The tensile stress in the reinforcement, $f_{ss,}$ shall not exceed $0.4F_y$.

3.5.3 Distribution of Loads on Stringer Bridges

3.5.3.1 General. The purpose of this Subsection is to establish consistent MassDOT procedures for distributing loads to the beams of stringer type bridges. The provisions of this Subsection apply to all types of stringer bridges, except as modified in Section 3.8 below for adjacent beam bridges.

First, this Subsection outlines procedure for distributing sidewalk and barrier dead loads to beams using a pile cap analogy.

Historically, the *AASHTO Bridge Design Specifications* have specified equal distribution of sidewalk and barrier dead loads to all beams in the cross section. Since the 1970's, Massachusetts has applied 60% of these loads to their immediate supporting beams. This distribution is based on the realization that these beams will see more of the superimposed dead load of a sidewalk or barrier that is cast on the edge of a slab than would the interior beams, especially on wide bridges. The value of 60% was not based upon any detailed analysis or study but rather upon engineering judgment.

However, in preparing this Subsection, MassDOT realized that the 60% load distribution formula was too simplistic and could not be easily adapted for cases where there was more than one beam under the sidewalk or if the first interior roadway beam was close to the curb. As a result, MassDOT undertook a grillage analysis study of typical bridges with various beam spacings and span lengths in order to calculate the actual sidewalk slab dead load distribution to the beams. Based on the results of this study, MassDOT found that the pile cap analogy provided a reasonable estimate of the actual sidewalk slab load distribution. Because this method is already presented in the *AASHTO LRFD Bridge Design Specifications* for the distribution of live load to exterior beams and is relatively simple to use, MassDOT decided to adopt this load distribution methodology to replace the 60% method.

For sidewalks, this distribution will extend to the first (or more, in the case of a wide sidewalk) interior roadway beam which will be used as the basis for the design of all interior beams in order to bracket the potential load effects for narrow bridges, where the interior beams could see more of these superimposed dead loads. The pile cap analogy will also address the effect of overhang length on load distribution.

Second, this Subsection also provides a methodology for distributing pedestrian live loads to the beams, since the *AASHTO LRFD Bridge Design Specifications* do not have specific design procedures but rather addresses them in the commentary (C3.6.1.1.2). The MassDOT procedures incorporate the procedures from the AASHTO commentary along with specific clarification in their application.

The provisions of this Subsection assume a typical MassDOT highway bridge and it neglects the beneficial effect of stiffening due to the sidewalk slabs and/or barriers. It is conservative when compared to the AASHTO provisions, which require that all loads placed after the deck slab is cured be equally distributed to all beams.

3.5.3.2 Design Procedure. The intent of these provisions is that the exterior beams should meet all loading situations that they may be reasonably expected to see without necessitating beam sections that are markedly larger than those of a typical interior beam. However, in no case shall the exterior beam have less non-composite section than an interior beam.

Therefore, the following steps outline the general procedure:

1. Design the first interior roadway beam.
2. Use the same beam section to check the other interior beams.
3. Use the same beam section to check the exterior sidewalk/safety curb beam, revise section if necessary.

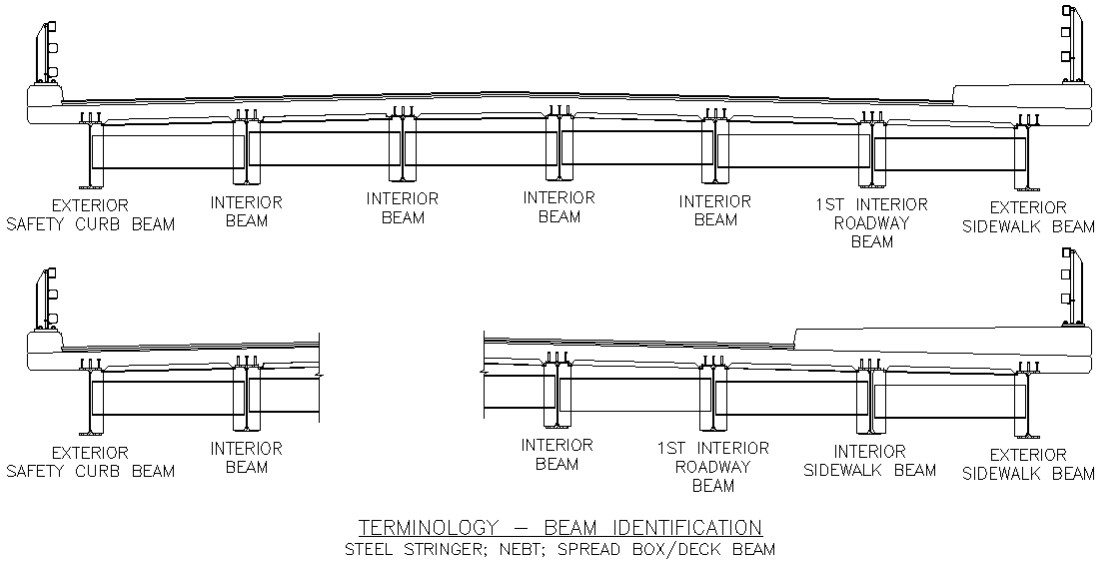

Figure 3.5.3-1

3.5.3.3 Non-Composite Dead Load Distribution (DC1). The non-composite dead loads, in addition to the beam self-weight, shall include the diaphragms or cross frames, utilities and other attachments, the deck and the deck haunch, and the additional concrete of the soffit at the exterior beams, which extends out over the entire overhang. For all beams, the deck slab dead load shall be distributed to each beam directly below based on tributary area. Utility loads can generally be assumed to be non-composite dead loads that are equally distributed to the beams that support them on either side of the utility bay.

3.5.3.4 Superimposed Dead Load Distribution (DC2 & DW)

1. For the first interior roadway beam, the wearing surface superimposed dead load shall be distributed to it by dividing this load by the total number of the beams (interior and exterior) in the cross section. The sidewalk slab and barrier/railing superimposed dead loads shall be distributed to the beam using the pile cap analogy (refer to Figure 3.5.3-2 below).
2. For interior beams (other than the interior sidewalk beam), the wearing surface, sidewalks, safety curbs, and barriers/railings superimposed dead loads shall be distributed equally to all

beams, i.e. sum of these loads divided by the total number of beams (interior and exterior) in the cross section (refer to Figure 3.5.3-2 below).

3. For the exterior beam supporting a safety curb or barrier, the wearing surface superimposed dead load shall be distributed dividing this load by the total number of the beams in the cross section (interior and exterior) and the safety curb/barrier/railing shall be distributed to the beam supporting the safety curb using the pile cap analogy (refer to Figure 3.5.3-2 below).

4. For the exterior sidewalk beam, the wearing surface superimposed dead load shall be distributed to it by dividing this load by the total number of the beams (interior and exterior) in the cross section. The sidewalk slab and barrier/railing superimposed dead loads shall be distributed to the beam using the pile cap analogy. If the sidewalk is supported by more than one beam, the superimposed dead loads (wearing surface, sidewalk slab and railing/barrier) shall be distributed to each of these beams as outlined above for the exterior sidewalk beam (refer to Figure 3.5.3-2 below).

3.5.3.5 Pedestrian Load (PL) Distribution. For interior beams and exterior safety curb beams, the distribution of the Pedestrian Live Load shall be similar to that of the superimposed dead loads, i.e. total pedestrian live load divided by the total number of beams in the cross section (interior and exterior). For the exterior sidewalk beam (and interior sidewalk beams) and the first interior roadway beam, the Pedestrian Live Load shall be distributed using the pile cap analogy. The Dynamic Allowance Factor (IM) shall not be applied to Pedestrian Live Loads. When designing continuous beams, the Pedestrian Live Load shall be positioned along the span in such manner, as to produce the maximum load effect in the beam (refer to Figure 3.5.3-2 below).

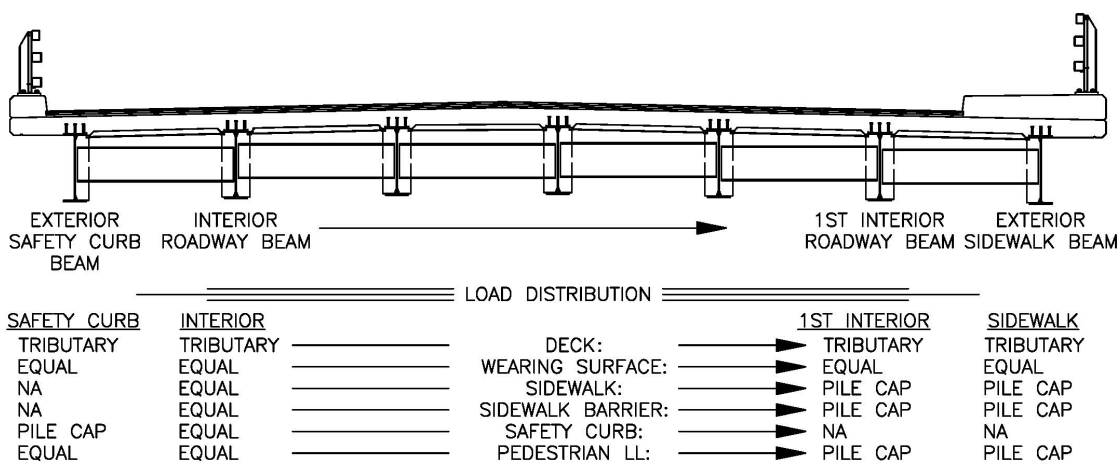

Figure 3.5.3-2

3.5.3.6 Pile Cap Analogy. The application of pile cap analogy is simplified method to determine load distribution using $\frac{P}{A}+\frac{M}{S}$; Note that typically in a pile group calculation the $\frac{M}{S}$ is considered plus minus (±), here however for the purpose of distributing superimposed dead loads, the uplift from the loads applied shall not be used to reduce the load effects on the beams on the other side of the center of gravity of the group.

In the calculation of the center of gravity of the group and its "inertia", the actual individual stiffness of the beams should typically be ignored, i.e. A = 1.0 for all beams.

3.5.3.7 Multiple Presence Factor (m) and Pedestrian Load. According to the *AASHTO LRFD Bridge Design Specifications*, Article 3.6.1.1.2, when Pedestrian Live Load is combined with one or more lanes of vehicular live load, it may be considered as one loaded lane for the purpose of determining the Multiple Presence Factor. However, this use of the Pedestrian Live Load as a loaded lane shall only apply to the design of exterior beams or other interior sidewalk beams and not for the design of interior roadway beams, even though for design purposes, part of the Pedestrian Load is applied to them.

Furthermore, the *AASHTO LRFD Bridge Design Specifications,* Commentary C3.6.1.1.2 states that the Multiple Presence Factor of 1.20 for a single lane does not apply to the pedestrian loads. Therefore, the Multiple Presence Factors for different combinations of vehicular live load and pedestrian load shall be as follows:

- Pedestrian Live Load only, m = 1.00
- One traffic lane only, m = 1.20
- Pedestrian Live Load and one traffic lane, m = 1.00
- Two traffic lanes only, m = 1.00
- Pedestrian Live Load and two traffic lanes, m = 0.85
- Three traffic lanes only, m = 0.85
- Pedestrian Live Load and three traffic lanes, m = 0.65
- More than three traffic lanes with or without Pedestrian Live Load, m = 0.65

The *AASHTO LRFD Bridge Design Specifications,* Article 3.6.1.1.2 states that these Multiple Presence Factors shall not be applied in conjunction with the approximate load distribution factors specified in Article 4.6.2.2, but they are to be applied when using the lever rule or the pile cap analogy to distribute the HL-93 Live Load.

3.5.3.8 <u>First Interior Roadway Beam</u> - Distribution of Loads for the Design (refer to Figure 3.5.3-3 below):

1. All Non-Composite Dead Loads, DC1, as per Paragraph 3.5.3.3.
2. Superimposed Dead Load, DC2 & DW, as per Paragraph 3.5.3.4-1.
3. Pedestrian Load, PL, as per Paragraph 3.5.3.5.
4. The entire HL-93 live load plus dynamic load allowance (IM) shall be distributed to first interior beam using the Distribution Factors from the procedures outlined in the *AASHTO LRFD Bridge Design Specifications*, Article 4.6.2.2.2.

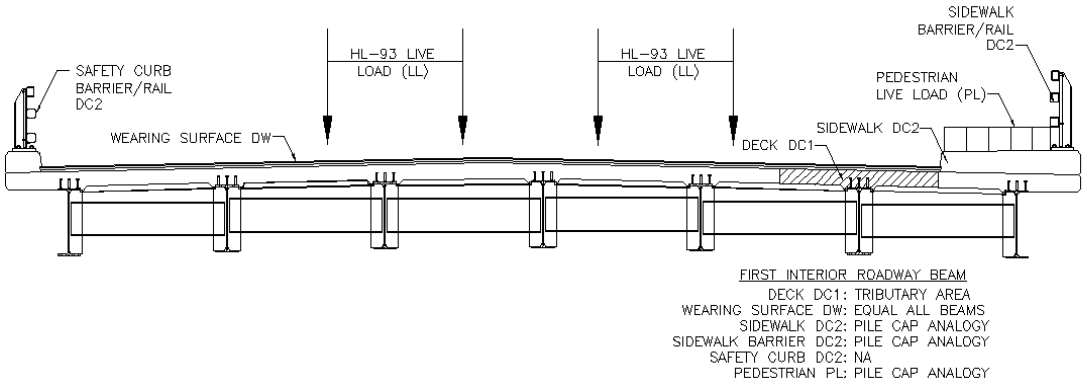

Figure 3.5.3-3

3.5.3.9 Interior Beams - Distribution of Loads for the Design (refer to Figure 3.5.3-4 below):

1. All Non-Composite Dead Loads, DC1, as per Paragraph 3.5.3.3.
2. Superimposed Dead Load, DC2 & DW, as per Paragraph 3.5.3.4-2.
3. Pedestrian Load, PL, as per Paragraph 3.5.3.5.
4. The entire HL-93 live load plus dynamic load allowance (IM) shall be distributed to interior beams using the Distribution Factors from the procedures outlined in the *AASHTO LRFD Bridge Design Specifications*, Article 4.6.2.2.2.

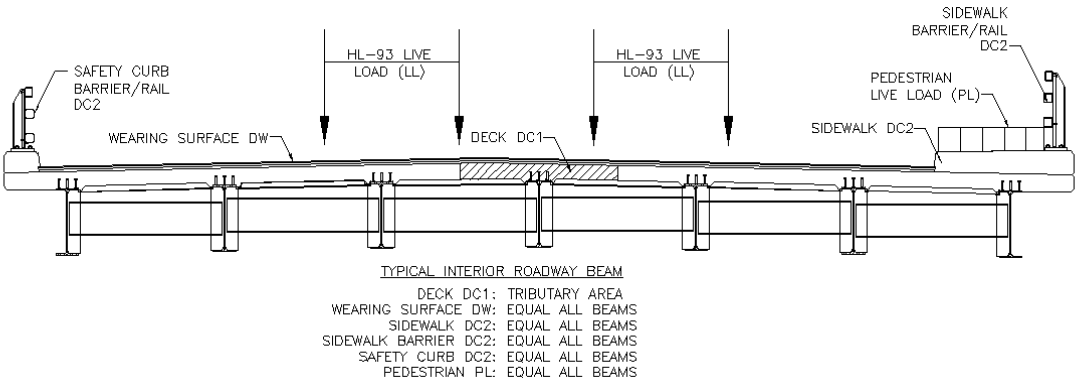

Figure 3.5.3-4

3.5.3.10 Exterior Beams under Safety Curbs or Barriers - Distribution of Loads for the Design (refer to Figure 3.5.3-5 below):

1. All Non-Composite Dead Loads, DC1, as per Paragraph 3.5.3.3.
2. Superimposed Dead Load, DC2 & DW, as per Paragraph 3.5.3.4-3.
3. Pedestrian Load, PL, as per Paragraph 3.5.3.5.

4. The entire HL-93 live load plus dynamic load allowance (IM) shall be distributed to the exterior beam using the Distribution Factors from the procedures outlined in the *AASHTO LRFD Bridge Design Specifications*, Article 4.6.2.2.

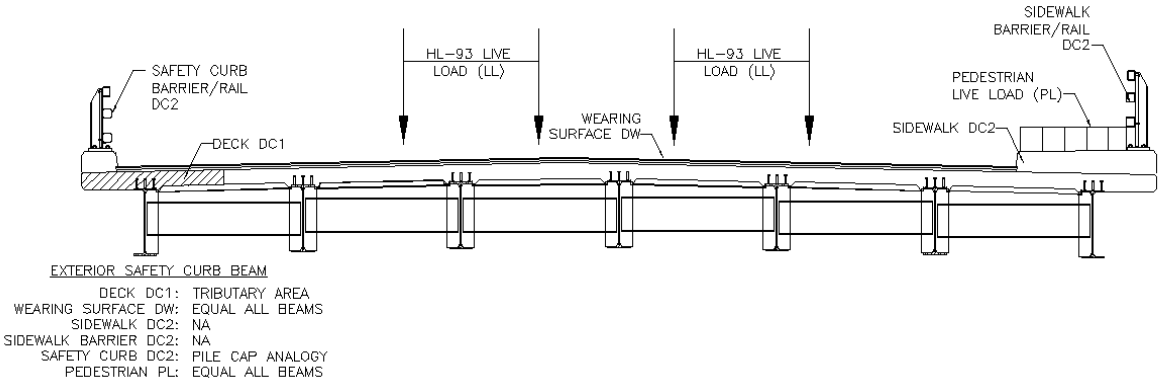

Figure 3.5.3-5

3.5.3.11 Exterior Beams under Sidewalks - Distribution of Loads for the Design.

Case I. The exterior beam under the sidewalk shall be checked/designed according to the following design load case (refer to Figure 3.5.3-6 below).

1. All Non-Composite Dead Loads, DC1, as per Paragraph 3.5.3.3
2. Superimposed Dead Load, DC2 & DW, as per Paragraph 3.5.3.4-4.
3. Pedestrian Load, PL, as per Paragraph 3.5.3.5.
4. The HL-93 Live Load plus Dynamic Load Allowance (IM) shall be distributed to the exterior beam under the sidewalk according to the procedures outlined in the *AASHTO LRFD Bridge Design Specifications*, Article 4.6.2.2.2d. The HL-93 Live Load(s) shall be located starting 2 feet from the face of the sidewalk curb and shall be placed in the design lanes across the bridge as specified in the *AASHTO LRFD Bridge Design Specifications*. Since the approximate load distribution factors specified in Article 4.6.2.2 will not typically be applicable to this geometry, lever rule or pile cap analogy will be utilized and the Multiple Presence Factor applied:

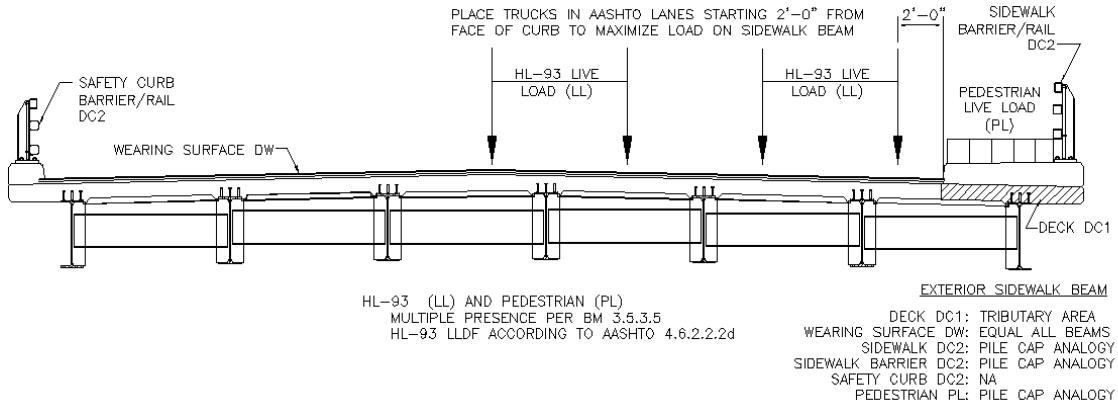

Figure 3.5.3-6

Case II. The exterior beam under the sidewalk shall be checked for a truck on the sidewalk as follows (refer to Figure 3.5.3-7 below).

1. Distribute all Dead Loads as per Design Case I above.
2. Do not apply the Pedestrian Load.
3. Using the Strength II Limit State, apply the truck load portion of a single HL-93 Live Load (no other lanes are loaded) <u>without</u> Dynamic Load Allowance (IM) located 2 feet from the face of the barrier/railing, as if the sidewalk was not there and distribute it to the exterior beam, or beams if more than one beam supports the sidewalk, using the pile cap analogy and a multiple presence factor m = 1.20.

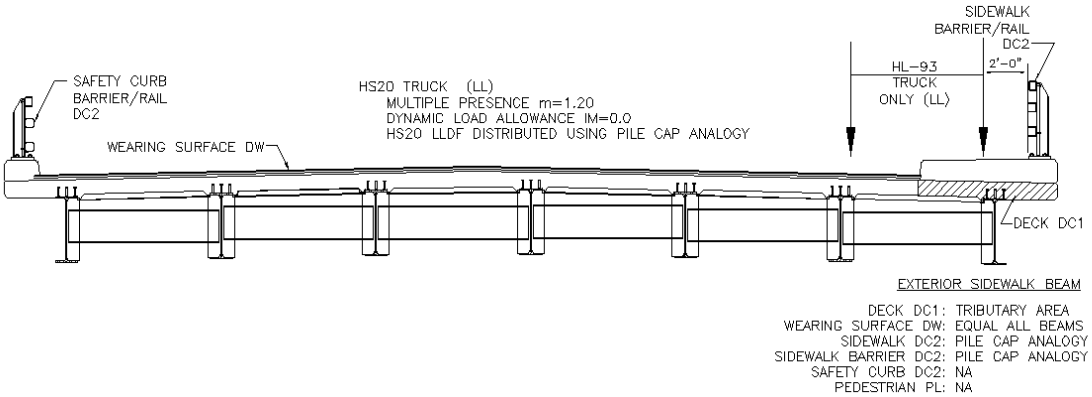

Figure 3.5.3-7

Note that a strict adherence to the *AASHTO LRFD Bridge Design Specifications*, Article 4.6.2.2.2d would require checking the Live Load distribution using Lever Rule provision. However, the Lever Rule is inherently conservative, because, in reality, the imaginary hinge will not form in the deck and it will remain capable of distributing the Live Load across to the other beams. Furthermore, the additional stiffness provided by the sidewalk slab is not considered in the analysis, and the remote likelihood of a truck being on the sidewalk does not warrant an overly conservative design approach. Therefore, for

simplicity, only the pile cap analogy is specified here for this load case.

3.5.3.12 All beams under a raised median with a continuous roadway slab shall be designed as interior beams in accordance with Paragraph 3.5.3.9. If there is a longitudinal joint in the median so that the roadway slab is discontinuous, then the beams adjacent to this joint shall be designed as exterior beams in accordance with Paragraph 3.5.3.10.

3.5.4 Distribution of Loads on NEXT Beam Bridges

3.5.4.1 The distribution of loads and load cases as specified in Subsection 3.5.3 above shall also apply to NEXT beams.

3.5.4.2 Non-Composite Dead Loads (DC1), Superimposed Dead Loads (DC2 & DW), Pedestrian Load (PL) shall be distributed to NEXT beams treating each stem of the beam as an individual stringer. The computed loads for each of the stems shall be combined and the resulting load shall be applied to the entire NEXT beam.

3.5.4.3 Vehicular Live Load Distribution factor shall be established for each NEXT Beam as follows:

1) Treat each stem as an individual stringer. Using average stem spacing (i.e. $S_{avg} = S/2$, where S is a distance between the beam centerlines) and assuming Cross Section Type K (NEXT F Beam Bridges) or Type I (NEXT D Beam Bridges), calculate Distribution Factors for each stem as per Table 4.6.2.2.2b-1 and Table 4.6.2.2.2d-1 of the *AASHTO LRFD Bridge Design Specifications* for interior and exterior beams, respectively. The application of the lever rule and pile cap analogy for exterior stems shall apply, if required.

2) Combine the distribution factors calculated above for two of the beam stems together. The result is the Distribution Factor to be applied to the entire NEXT beam.

3.5.4.4 When designing NEXT D Beams, the following shall be noted: if a precast or cast-in-place barrier is used, it should be placed after the longitudinal joint pours are made to allow for the distribution of the parapet superimposed dead load as per procedure specified above. If the barrier is placed before the longitudinal joint pours are made, the dead load of the parapet shall be applied entirely to the exterior beam below it.

3.5.5 Utilities on Structures

3.5.5.1 Typical details for utility supports for the various types of superstructures are shown in the Part II of this Bridge Manual. At the initiation of the project, the Designer shall investigate and identify all utilities (existing and/or proposed) carried on the structure or crossing its footprint. The Designer shall submit to the MassDOT Utility/Railroad Engineer letter(s) of transmittal that the said utility investigation was performed and resolution of all issues was achieved. All existing and proposed utilities shall be shown on the Construction Drawings. Railroads may have additional utility placement requirements that the Designer shall incorporate in the design.

3.5.5.2 All utilities on stringer bridges shall be carried in the utility bay(s) of the superstructure and shall be accessible from below. The dead load of utilities is assumed to be carried by the two beams on either side of the utility bay. Utilities shall not be embedded within a deck slab or sidewalk slab because

their presence there could inhibit future maintenance activities.

When replacing bridges carrying local roads with no existing utilities present, a utility bay shall be provided on the new structure. In these situations the stringers on either side of the utility bay shall be designed for a future utility load of 125 pounds per foot per beam (for a combined utility load of 250 pounds per foot per bay). Since this load already accounts for some uncertainty of the utility type and its load, the maximum load factor γ_p shall be taken as 1.25. Also, since these utilities may never be installed, the minimum load factor γ_p shall be taken as 0.0.

For bridges carrying interstate or other limited access highways provisions for fiber optic and highway lighting conduits shall be made.

3.5.5.3 Utilities on adjacent deck and box beam bridges shall be carried and designed for as specified in Subsection 3.8.2 below.

3.5.5.4 Utilities are typically installed before the deck is placed since it facilitates their installation and alignment both horizontally and vertically. Therefore, the non-composite section shall carry the total dead load of utilities.

3.5.5.5 When the utility is to be installed for a municipality, such as a water pipe, the complete support system shall be included as part of the contract. Other utilities not installed by the Contractor, such as telephone ducts and gas mains, shall be indicated on the Construction Drawings as to their location in the utility bay or other designated area with the notation: TO BE INSTALLED BY OTHERS. The Designer is cautioned to provide utility bays of sufficient size to accommodate the utility installation.

3.5.6 Deflection and Camber

3.5.6.1 The ratio of live load plus dynamic load allowance deflection to span length shall not be greater than 1/1000 for all bridges with sidewalks. For bridges without sidewalks, this ratio preferably should not exceed 1/1000. However, under no circumstances shall it be greater than 1/800. This deflection check shall only be applied to the typical interior beam. The deflection calculation shall be performed in accordance with *AASHTO LRFD Bridge Design Specifications*.

3.5.6.2 Camber for steel beams shall be calculated and specified on the Construction Drawings as shown in Part II of this Bridge Manual. Provide the minimum number of different camber diagrams for all beams in a given span. Group beams within a span whose maximum total camber does not vary more than 1/8”.

3.5.6.3 Camber and profile vertical curvature shall be considered when calculating bridge seat elevations for prestressed concrete beam bridges so that the top of roadway will match the design roadway profile. Cambers will not be shown on the Construction Drawings nor will they be used when calculating under-bridge clearances. The prestressing force produces moments in prestressed concrete beams that result in upward deflections. These deflections are partially offset by the downward deflections due to the beam self-weight, resulting in a net upward deflection of the beam at erection. Observation of actual bridges indicates that once the slab is placed, the prestressed concrete beams tend to behave as if they were locked in position. The net upward camber of these beams shall be calculated using the PCI “at-erection” multipliers applied to the deflections from prestressing and self-weight. The

bridge seat elevations shall be determined using the methodology contained in Part II of this Bridge Manual.

3.5.7 Elastomeric Bridge Bearing Assemblies

3.5.7.1 General. Elastomeric bearing assemblies shall be used for both precast concrete and steel beam bridges and shall be designed and fabricated in accordance with the requirements of Section 14 of the *AASHTO LRFD Bridge Design Specifications*, Section 18 of the *AASHTO LRFD Bridge Construction Specifications*, the MassDOT Standard Specifications for Highways and Bridges, and as modified by this section.

Steel reinforced elastomeric bearing assemblies shall consist of alternate layers of steel laminates and elastomer bonded together and, either a beveled or flat sole plate for steel beam bridges, or internal load plate for prestressed concrete beam bridges, if required. The top and bottom cover layers of elastomer shall be no thicker than 70% of the individual internal layers. Steel laminates shall have a minimum thickness of 11 gage. Holes in either the elastomer or the steel laminates are not allowed. Bearings less than or equal to 5" thick shall have ¼" edge cover. All bearings thicker than 5" shall have ½" edge cover.

3.5.7.2 Design Methodology. Method B, as presented in the *AASHTO LRFD Bridge Design Specifications* Article 14.7.5, is the preferred MassDOT method for designing steel-reinforced elastomeric bearings and should be used for design. Method A, as presented in *AASHTO LRFD Bridge Design Specifications* Article 14.7.6, may also be used to design steel-reinforced elastomeric bearings and plain elastomeric pads with the prior approval of the State Bridge Engineer, if the Designer can provide sufficient justification to support its use in place of Method B.

3.5.7.3 Design Methodology Background. In recent years, the expanded use of elastomeric bearings for steel bridges and the use of deeper beams to span longer distances have imposed greater rotational demands on steel reinforced elastomeric bearings. In many instances, the overly conservative rotational design capacities have unreasonably limited elastomeric bearing application or prevented their usage altogether.

Starting with the 2009 Interim Revisions to the *AASHTO LRFD Bridge Design Specifications* the design procedures for steel reinforced elastomeric bearings for both Method A and Method B were substantially revised. These revisions incorporate the research results and recommendations from NCHRP Project 12-68 "Improved Rotational Limits of Elastomeric Bearings", which were subsequently included into NCHRP Report 596 "Rotational Limits for Elastomeric Bearings".

The major changes to the design procedures incorporated in the latest edition of the *AASHTO LRFD Bridge Design Specifications* are as follows:

- The allowable design capacities for Method A have been increased based upon the findings of the above referenced research. The fundamental form of the Method A design equations remained unchanged, increased neoprene compression capacities are provided and the check on rotational capacity ("no lift-off") is eliminated.
- The revised procedure for Method B is based upon the actual failure mechanism encountered in steel-reinforced elastomeric bearings. It limits total elastomeric shear strain due to axial load, rotation, and shear deformations, as well as distinguishes between static and cyclic

component of shear strain. Method B provides for larger rotational capacity and is a versatile design procedure that allows for different combination of loadings.

The experience with accelerated bridge construction techniques on numerous bridge projects, such as the Medford Fast 14, shows that Method A previously provided a very narrow window of acceptable bearing design for a specific set of loadings. Furthermore, 1,008 installed bearings were studied to see just how much of additional rotation bearings actually see due to construction and fabrication and to be able to check the actual required bearing tolerances against the tolerances recommended by the *AASHTO LRFD Bridge Design Specifications*. This study found that these additional rotations greatly exceed the 0.005 radians currently prescribed in the *AASHTO LRFD Bridge Design Specifications* for construction tolerances, and that using a construction tolerance rotation of 0.03 radians would cover 90% of these actual rotations that were observed.

Presently, as per AASHTO M 251 specifications, bearings designed according to Method B require more extensive material and fabrication testing and therefore, it has historically been assumed that the required testing significantly increases their construction costs. Due to this fact and the apparent simplicity of Method A it was predominantly used by the state DOT's throughout the country. However, recent discussions with fabricators and testing laboratories indicate that this is not necessarily true due to the fact that most fabricators perform the testing required by AASHTO M 251 specification, as part of their normal QA/QC operations. Also, the independent testing laboratories report that the costs associated with the required testing are minor. Moreover, numerous tests performed as a part of the research for NCHRP Project 12-68 "Improved Rotational Limits of Elastomeric Bearings" show that more rigorous testing is needed for large bearings, and particularly thick ones, because they are more difficult to fabricate. Therefore, the bearing size, and not the design method employed, should be used as the criterion for more rigorous testing. Large bearings are defined as thicker than 8 in. or with a plan area of larger than 1000 in^2.

Therefore, based on the above the following shall apply to the design of the steel-reinforced elastomeric bridge bearings:

1. Method B procedure provides more rotational capacity than does Method A.
2. A construction tolerance of 0.03 radians shall be used instead of the 0.005 radians specified in the *AASHTO LRFD Bridge Design Specifications* since it more accurately reflects actual installed conditions.

3.5.7.4 Elastomer Material Properties. Based on Articles 14.7.5.2 and 14.7.6.2 of the *AASHTO LRFD Bridge Design Specifications*, the properties of elastomer material shall be as follows:

Method B: The elastomer shall be specified by Shear Modulus. The standard Shear Modulus to be specified for MassDOT bearings shall be taken as 0.160 ksi. The Shear Modulus for design purposes shall be taken as the least favorable value from the range of ±15% of the specified Shear Modulus, which for the Shear Modulus of 0.160 ksi is a range of 0.136 ksi (min.) and 0.184 ksi (max.).

Method A: The elastomer shall be specified by its Nominal Hardness on the Shore A scale. The Nominal Hardness of elastomer shall be 60 Durometer on the Shore A scale. In this case, the shear modulus for design purposes shall be taken as the least favorable value from the range for that hardness given in Table 14.7.6.2-1, which is between 0.130 ksi and 0.200 ksi.

3.5.7.5 Reinforcement. Steel laminates in steel reinforced elastomeric bearings shall conform to ASTM A 1011 Grade 36 or higher. The edges of all steel laminates shall be de-burred or otherwise rounded prior to being molded in the bearing to reduce the stress concentration in the elastomer at the critical location at the edge of the steel laminate.

Tapered internal load plates shall conform to AASHTO M 270 Grade 36 or higher.

3.5.7.6 Design Procedure. When using Method B, the basic equation for combined axial load, rotation, and shear at the service limit state (*AASHTO LRFD Bridge Design Specifications*, EQ 14.7.5.3.3-1) shall be limited to 4.75 instead of 5.0 in order to provide additional rotational capacity reserve. Unless otherwise noted, the resistance factor for bearings, ϕ, shall be taken as 1.0. Dynamic load allowance shall not be included. For bearings that have an internal load plate, only the elastomer layers and steel-reinforcement below the load plate shall be used for the design of the bearing. The load plate and the upper cover layer are not considered part of the bearing and shall not be counted as elastomer layers or reinforcement and shall not be included as part of the bearing height for the bearing stability check.

The design rotation of bearing assemblies shall account for dead and live load rotations, rotation due to profile grade, and an additional rotation of 0.03 radians, to account for uncertainties and construction tolerances. Note that this rotation is assumed to be the vector sum of the longitudinal and transverse direction. Careful consideration shall be given to the effect of beveled sole plates (steel beam bridges) or internal beveled load plates (prestressed concrete beam bridges) and girder camber. For prestressed concrete beams, the net upward camber and associated end of beam rotations shall be calculated using the PCI "at erection" multipliers.

Method B requires the Designer to evaluate the bearing for both longitudinal and transverse effects. For example the shear strain due to thermal movement is much different longitudinally (larger) than transversely (smaller). Likewise the effect of vehicular braking force only affects the bearing in the longitudinal direction, however with accelerated bridge construction and on precast beams with heavy skews, especially box and NEXT beams, transverse rotations can be significantly larger than longitudinal ones. The bearing needs to be designed using the resultant thermal movements and rotations. This will produce a conservative result as the maximum effect of the breaking force will not be coincident with the resultant movements or rotations. The 0.03 radians of additional rotation, for uncertainties and construction tolerance, shall be applied to the resultant rotation and not applied longitudinally and transversely.

Sole plates (steel beam bridges) or internal load plates (prestressed concrete beam bridges) may be beveled to account for the rotations due to profile grade. Refer to Paragraph 3.5.7.6 of this section for other bevel plate's requirements. Ideally, properly beveled sole plates or internal load plates provide a level surface after the application of total dead load and after "at erection" camber (prestressed concrete beam bridges) has developed. If beveled sole plates or internal load plates are used, the design rotation for the elastomer due to profile grade should be neglected. When the required bevel of sole plates (steel beam bridges) or internal load plates (prestressed concrete beam bridges) is less than 1%, the required bevel (in radians) shall be included in the bearing design rotation and a flat sole plate (steel beam bridges) or no internal load plate (prestressed concrete beam bridges) shall be used.

The dead load design rotation of the elastomer should be neglected if the girder is cambered for dead loads (steel beam bridges). If the girder is not cambered the Designer shall account for the dead

load rotation. In the case where a beveled internal load plate is used (prestressed concrete beam bridges), it shall be designed to accommodate the rotation due to profile grade, the dead load rotation, and the beam camber at erection. The following demonstrate the effects of girder cambering and a beveled sole plate (steel beam bridges) or internal beveled load plates (prestressed concrete beam bridges) on the rotation design of elastomeric bearings of a simple bridge (please note that the numbers shown are not specific to any bridge):

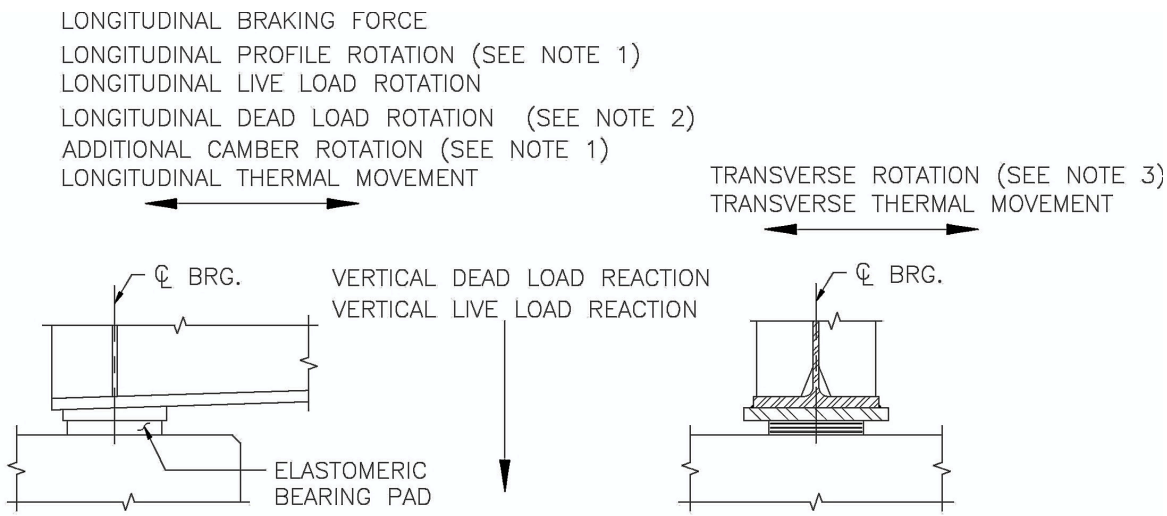

1. IF THE COMBINATION OF LONGITUDINAL PROFILE ROTATION AND ADDITIONAL CAMBER IS EQUAL TO OR GREATER THAN 1.0% THEN THESE ARE ADDRESSED THROUGH TAPERING OF THE SOLE PLATE AND IGNORED IN THE DESIGN.
2. DEAD LOAD ROTATION (CAMBER) IS TYPICALLY ZERO AS IT IS OFFSET BY THE BEAM CAMBER
3. TRANSVERSE ROTATION IS TYPICALLY ASSUMED TO BE ZERO DURING DESIGN, HOWEVER IT MAY BE PRESENT BASED UPON AS BUILT CONDITIONS IF A REVISED EVALUATION IS NECESSARY.

SAMPLE TABULATION OF BEARING ROTATIONS FOR ELASTOMERIC BEARINGS

STEEL GIRDER WITH BEVELED SOLE PLATES

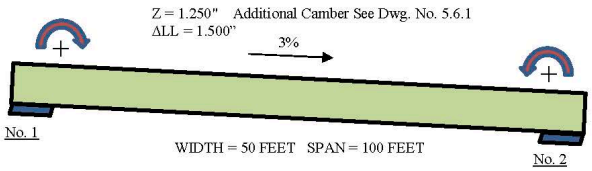

	No. 1	No. 2	
PROFILE GRADE ROTATION:	0.030 RAD	-0.030 RAD	MINUS 3% ROADWAY GRADE
LONG. DEAD LOAD ROATION:	0.000 RAD	0.000 RAD	GIRDER IS CAMBERED FOR DL
ADDITIONAL CAMBER ROTATION:	-0.003 RAD	0.003 RAD	ADDITIONAL CAMBER Z=0.125"/10 FT ← Z ROTATION $= \frac{3.2 \times 1.250}{100 \times 12} = 0.003$ RAD
SUBTOTAL:	0.027 RAD	-0.030 RAD	

GREATER THAN 1% THEREFORE USE BEVELED SOLE PLATES

LONG. ROTATION FROM ABOVE: 0.000 RAD USE 0.0 RAD DUE TO BEVELED SOLE PLATES
LONG. LIVE LOAD ROTATION : 0.004 RAD ← LL ROTATION $= \frac{3.2 \times 1.500}{100 \times 12} = 0.004$ RAD
TRANS. ROTATION : 0.000 RAD
$\sqrt{LONG^2 + TRANS^2}$ 0.004 RAD
UNCERTAINTIES AND TOLERANCES : 0.030 RAD
TOTAL DESIGN ROTATIONS : 0.034 RAD ← DESIGN VALUE

LONG. THERMAL MOVEMENT :
SPAN = 100 FT ΔT = 100° (STEEL) 0.390"
TRANS. THERMAL MOVEMENT :
WIDTH = 50 FT ΔT = 70° (CONC) 0.116"
$\sqrt{LONG^2 + TRANS^2}$ 0.407" ← DESIGN VALUE

STEEL GIRDER WITHOUT BEVELED SOLE PLATES

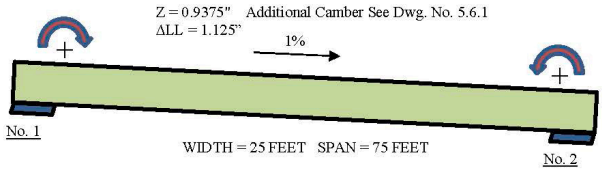

	No. 1	No. 2	
PROFILE GRADE ROTATION:	0.010 RAD	-0.010 RAD	MINUS 1% ROADWAY GRADE
LONG. DEAD LOAD ROATION:	0.000 RAD	0.000 RAD	GIRDER IS CAMBERED FOR DL
ADDITIONAL CAMBER ROTATION:	-0.003 RAD	0.003 RAD	ADDITIONAL CAMBER Z=0.125"/10 FT ← Z ROTATION $= \frac{3.2 \times 0.9375}{75 \times 12} = 0.003$ RAD
SUBTOTAL:	0.007 RAD	-0.007 RAD	

NOT GREATER THAN 1% THEREFORE DO NOT USE BEVELED SOLE PLATES

LONG. ROTATION FROM ABOVE: 0.007 RAD
LONG. LIVE LOAD ROTATION : 0.004 RAD ← LL ROTATION $= \frac{3.2 \times 1.125}{75 \times 12} = 0.004$ RAD
TRANS. ROTATION : 0.000 RAD
$\sqrt{LONG^2 + TRANS^2}$ 0.011 RAD
UNCERTAINTIES AND TOLERANCES : 0.030 RAD
TOTAL DESIGN ROTATIONS : 0.041 RAD ← DESIGN VALUE

LONG. THERMAL MOVEMENT :
SPAN = 75 FT ΔT = 100° 0.293"
TRANS. THERMAL MOVEMENT :
WIDTH = 25 FT ΔT = 100° 0.098"
$\sqrt{LONG^2 + TRANS^2}$ 0.308" ← DESIGN VALUE

PRESTRESSED GIRDER WITH BEVELED LOAD PLATES

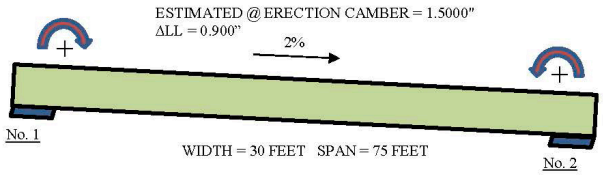

	No. 1	No. 2	
PROFILE GRADE ROTATION:	0.020 RAD	-0.020 RAD	MINUS 2% ROADWAY GRADE
LONG. DEAD LOAD ROATION:	0.000 RAD	0.000 RAD	GIRDER DEAD LOAD DEFLECTION (NOT INCLUDING SELF WEIGHT)
ADDITIONAL CAMBER ROTATION:	-0.005 RAD	0.005 RAD	EST. CAMBER AFTER PRESTRESS ← CAMBER ROTATION $= \frac{3.2 \times 1.500}{75 \times 12} = 0.005$ RAD
SUBTOTAL:	0.015 RAD	-0.015 RAD	

GREATER THAN 1% THEREFORE USE INTERNAL BEVELED LOAD PLATES

LONG. ROTATION FROM ABOVE:	0.000 RAD	USE 0.0 RAD DUE TO BEVELED SOLE PLATES
LONG. LIVE LOAD ROTATION :	0.003 RAD	← LL ROTATION $= \frac{3.2 \times 0.900}{75 \times 12} = 0.003$ RAD
TRANS. ROTATION :	0.000 RAD	
$\sqrt{LONG^2 + TRANS^2}$	0.003 RAD	
UNCERTAINTIES AND TOLERANCES :	0.030 RAD	
TOTAL DESIGN ROTATIONS :	0.033 RAD	← DESIGN VALUE

LONG. THERMAL MOVEMENT :		
SPAN = 75 FT ΔT = 70°	0.173"	
TRANS. THERMAL MOVEMENT :		
WIDTH = 30 FT ΔT = 70°	0.069"	
$\sqrt{LONG^2 + TRANS^2}$	0.187"	← DESIGN VALUE

It is desired to have all of the bearings for a line of beams at a support to be the same. Therefore the bearings should be designed for the first interior beam. The live load rotation should be calculated according to *AASHTO LRFD Bridge Design Specifications*, Article 2.5.2.6.2.

For exterior beams the Designer shall check the first interior bearing design using the exterior dead and live loads with the live load rotation used in the interior bearing design, however the *AASHTO LRFD Bridge Design Specifications* Equation 14.7.5.3.3-1 shall be limited to 5.0 instead of the 4.75 as noted above.

For a simple span bridge the maximum rotation of the beam end can be calculated using normal stiffness methods. However, many beam design computer programs do not calculate the beam end rotation. An approximate beam end rotation can be determined based on maximum midspan deflection (please note that this is an exact solution only in the case when the beam is prismatic and the beam deflection is parabolic):

- Calculate the maximum live load deflection at midspan Δ;
- Approximate end rotation in radians is equal to (3.2*Δ)/Span Length.

When determining the deflections and end rotations of continuous span bridges, the composite section properties shall be used for all segments of all beams. This includes the negative moment regions, where the transformed concrete slab should be used in place of the cracked section (beam and slab reinforcement).

3.5.7.7 Bearings shall also be designed for all longitudinal and lateral movements. Longitudinal translation due to dead load girder rotation about the neutral axis may need to be accounted for beams with large rotations or for deep beams. This translation should be added to the design longitudinal

movement. The *AASHTO LRFD Bridge Design Specifications* outline requirements for calculation of thermal movement. The following are general guidelines that are intended to supplement the *AASHTO LRFD Bridge Design Specifications*:

STANDARD BRIDGES:

In this context a standard bridge is defined as a bridge that has the following geometric conditions:

1. Straight beams;
2. Skew angle ≤ 30 degrees;
3. Span length to width ratio greater than 2;
4. The bridge has 3 or less travel lanes.

The major contributor to thermal movements is the bridge deck. This portion of the bridge structure is exposed to the highest temperature extremes and is a continuous flat plate. A flat plate will expand and contract in two directions, and will not be significantly affected by other components of the superstructure below, i.e. beams, diaphragms and cross frames. For bridges that meet the general criteria listed above, the calculations for thermal movement can be based on the assumption that the bridge expands along its major axis, which is along the span length.

NON-STANDARD BRIDGES:

The treatment of non-standard bridges requires careful design and planning. A refined analysis may be required for non-standard bridges in order to determine the thermal movements, beam rotations (transverse and longitudinal), as well as the structural behavior of the system. The stiffness of substructure elements may also have an effect on the thermal movement at bearings. The following are general basic guidelines outlining the thermal movement behavior for non-standard bridges:

- Curved Girder Bridges:

It has been well documented that curved girder bridges do not expand and contract along the girder lines. The most often used approach is to design bearing devices to expand along a chord that runs from the point of zero movement (usually a fixed substructure element) to the bearing element under consideration.

- Large Skew Bridges:

The major axis of thermal movement on a highly skewed bridge is along the diagonal connecting the acute corners. The alignment of bearings and keeper assemblies should be parallel to this axis. The design of the bearings should also be based on thermal movement along this line.

- Bridges with small span-to-width ratios:

Bridges with widths that approach and sometimes exceed their lengths are subject to unusual thermal movements. A square bridge will expand equally in both directions, and bridges that are wider than they are long will expand more in the transverse direction than in the longitudinal direction. The design of bearing devices and keeper assemblies should take into account this movement.

- Wide bridges:

Bridges that are wider than three lanes will experience transverse thermal movements that can become excessive. Care should be taken along lines of bearings as to not to guide or fix all bearings along the line. Guides and keeper assemblies should be limited to the interior portions of the bridge that do not experience large transverse movements.

The Designer should specify on the Construction Drawings a range of temperatures for setting the bearings based on their design. Provisions should also be included for jacking the structure in order to reset the bearings if this range cannot be met during construction. A recommended temperature range is the average ambient temperature range for the bridge location plus or minus 10 °F. Larger values can be specified provided that the bearing is designed for the additional movement.

For continuous span bridges, bearings will see both minimum and maximum loads, depending on the location of the truck along the span of the bridge. In these situations, a bearing shall be designed and detailed for the maximum loading combination. The minimum loading combination shall be ignored in the bearing design.

Where anchor bolts are used to resist lateral forces, they shall be located outside the bearing pads and shall be designed for bending as well as shear. The sole plates shall also be checked for shear and bending.

3.5.7.8 Detailing. Steel-reinforced elastomeric bearings shall be detailed on the Construction Drawings in accordance with Part II of this Bridge Manual. The total thickness of the bearing pad shall be shown in inches in ¼" increments. On the Construction Drawings, the thickness of steel laminates shall be specified in gage, and the actual thickness of these laminates in decimal inches shall be used to determine the actual thickness of the elastomer layers in decimal inches. The total thickness of all reinforcement and elastomer layers will sum up to the total thickness of the bearing pad in ¼" increments.

Tapered layers of elastomer in reinforced bearings are not permitted. If tapering of the bearing is necessary, it shall be accomplished as follows:

- For steel beams, provide an external tapered steel sole plate welded to the bottom flange.
- For concrete beams, use a tapered internal steel load plate and provide a cover layer of elastomer with constant thickness.

The minimum longitudinal slope of the bottom flange beyond which tapering of the bearing is required shall be equal to 1%. Refer to Paragraph 3.5.7.6 of this Section regarding situations with less than 1% bevels.

Standard bridge bearing details are shown in Part II of this Bridge Manual. Bearing types not shown must receive prior approval from the State Bridge Engineer before being used in the design of a bridge project.

3.5.7.9 Application. For adjacent concrete box and deck beam bridges with a span length of 50 feet or less, use rectangular plain (un-reinforced) elastomeric pads, 1" thick by 5" wide, detailed and placed as shown in Part II of this Bridge Manual.

For all other applications, circular steel-reinforced elastomeric bearings shall be used. As an exception, in case of large rotations, primarily about one axis on narrow bridges with skews of 10° or less, the use of rectangular steel reinforced elastomeric bearings arranged to facilitate rotation about the weak axis may be considered. The use of and detailing of rectangular steel reinforced elastomeric bearings must receive prior approval of the State Bridge Engineer.

3.5.7.10 Unfilled and lubricated PTFE (polytetrafluorethylene) sliding bearings shall only be used when a bearing with a low coefficient of friction is needed to minimize horizontal forces, i.e. thermal or seismic, on the substructure. Section 14, Article 14.7.2, of the *AASHTO LRFD Bridge Design Specifications* shall be used to design this type of bearing. They shall be detailed on the Construction Drawings as shown in Part II of this Bridge Manual.

3.5.7.11 Marking. Problems have occurred in the field with the installation of bearings with beveled sole plates (steel beam bridges) or beveled internal load plates (prestressed concrete beam bridges). It is not always obvious which orientation a bearing must take on a beam before the dead load rotation has been applied. This is especially true for bearings with minor bevels. To prevent errors, the Designer shall add the following notes to the Construction Drawings: "*All bearings shall be marked prior to shipping. The marks shall include the bearing location on the bridge, and a 1/32" deep direction arrow that points up-station. All marks shall be permanent and be visible after the bearing is installed.*"

3.5.7.12 Anchor bolts. When bearings with anchor bolts are used, in order to provide sufficient capacity to prevent failure of the concrete into which the anchor bolt is embedded, the embedment of each anchor bolt shall be designed conservatively to resist a pull out force equal to the sum of the design horizontal shear force applied to the anchor bolt plus any uplift force due to regularly applied loads that needs to be held down. The embedment depth of the anchor bolt shall be sized to resist this pull out force by creating a truncated failure cone in the concrete that starts at the embedded head of the anchor bolt and extends vertically at an angle of 45º. The area of this truncated cone shall be used to calculate the resistance of the concrete analogous to a punching shear problem. If part of this failure cone extends beyond the edge of the concrete member into which the anchor bolt is embedded, then the area of the cone that lies outside of the concrete shall not be considered in calculating the concrete resistance. If anchor bolts are located so that their failure cones intersect, the area of the cones that lies within this intersection zone shall not be considered in calculating the concrete resistance of either cone.

3.5.7.13 High-Load Multi-Rotational Bearings. If the bridge reaction is too great for a standard elastomeric bridge bearing assembly to handle, then the Designer shall use a disc type high-load multi-rotational bearing instead. The advantage that a disc bearing has over a standard pot bearing is that the disc is exposed and can be readily inspected while the elastomeric component and the seals of a pot bearing are not.

3.5.8 Scuppers

3.5.8.1 An accurate determination of the need for scuppers on bridges as well as the design of deck drainage systems will be based on the latest edition of the Hydraulic Engineering Circular No. 21: *Design of Bridge Deck Drainage* (Publication No. FHWA SA-92-010).

3.5.8.2 The following may be used as a guide for estimating the need for scuppers and for locating them to properly drain the bridge superstructure:

1. On long bridges, scuppers should be placed about 350 feet on centers.

2. When the bridge is superelevated, scuppers are placed only on the low side.

3. On bridges, scuppers may be required when:
   a) The profile grade is less than 1%.
   b) The profile grade is such that ponding may occur on the roadway surface. An example would be a sag curve on the bridge.

The Designer shall investigate the highway drainage, which may include catch basins at the approaches to the structure.

3.5.8.3 When scuppers are needed, they shall generally be placed near a pier and on the upgrade side of a deck joint. Care shall be taken to ensure that scupper outlets will not result in run-off pouring or spraying onto either the superstructure beams or the piers.

3.5.8.4 Horizontal runs of drainpipes and 90° bends shall not be used. The minimum drainpipe diameter or width shall be 10". The number of drainpipe alignment changes shall be minimized. Multiple alignment changes result in plugged scuppers that defeat the purpose of providing deck drainage. Cleanouts shall be accessible for maintenance purposes and shall be placed, in general, at every change in the alignment of the drainpipes. Typical details for scuppers and downspouts are shown in Part II of this Bridge Manual.

3.6 STEEL SUPERSTRUCTURES

3.6.1 General Guidelines

3.6.1.1 AASHTO M 270 Grade 50W uncoated weathering steel has traditionally been the primary option for all steel bridges constructed by MassDOT due to its perceived low life cycle cost because it did not require periodic re-coating. However, recent evaluations of weathering steel bridges that have been in place for ten years or more, specifically over high speed and high volume roadways, have shown that the salt spray kicked up by vehicles contaminates the steel surface and prevents the protective patina to form, resulting in continued corrosion of the steel. As a result, while the use of uncoated weathering steel should still be considered wherever practical, it should not be used in the following situations:

- In acidic or corrosive environments;
- In locations subject to salt water spray or fog;
- In depressed limited access highway sections (tunnel effect with less than 20 feet underclearance) where salt spray and other pollutants may be trapped;
- In low underclearance situations where the steel is 10 feet or less from normal water elevation;
- Where the steel may be continuously wet or may be buried in soil;
- In expansion joints or for stringers or other members under open steel decking, HMA filled bridge planks, or other deck types that allow water to permeate through;
- In bridge types where salt spray and dirt accumulation may be a concern (e.g., trusses or inclined-leg bridges).

Guidelines for the use of uncoated weathering steel may be found in the FHWA Technical Advisory T5140.22.

3.6.1.2 At locations where the use of uncoated weathering steel is not practical, coated AASHTO M 270 Grade 50 steel shall be used. Hot-dip galvanized steel will provide the best protection and should be specified wherever practical. However the size of the galvanizing kettle typically limits the length of a beam that can be galvanized to about 80 feet (for a 36" deep beam). Due to the expense of preparing and painting galvanized steel as well as the care needed to ship painted beams to the field, galvanized beams should not typically be painted. If a painted beam is desired for aesthetic considerations, only the fascia beams shall be painted, while the interior beams can be left galvanized.

In order to reduce the need for field splices or to eliminate them altogether, for beams longer than the limits specified above, metalizing should be specified as the coating method. Because the metalizing process results in a zinc coating that is somewhat porous, a sealer must be applied to all exposed surfaces to extend the life of the metalizing. Similar to galvanized beams, if a painted beam is desired for aesthetic considerations, only the fascia beams shall be painted, while the interior beams will be left metalized with a sealer. The type of thermal spray feedstock and the coating thickness shall conform to Table 3.6.1-1 below. The Designer shall specify on the Construction Drawings which zone is applicable.

ZONE	WIRE TYPE	THICKNESS (mils)**	COATING SYSTEM
Zone 1*	Zinc or Zinc-Aluminum	6-8	Three Coat
	Zinc-Aluminum	6-8	Sealer Only
Zone 2*	Zinc or Zinc- Aluminum	8-10	Three Coat
	Zinc-Aluminum	10-12	Sealer Only
Zone 3*	Zinc or Zinc-Aluminum	10-12	Three Coat
	Zinc-Aluminum	12-15	Sealer Only

***Zone 1** – Bridges in rural environments, not over waterways, and not over high speed state or interstate highways with potential for salt spray and heavy salt use and de-icing chemical use.
***Zone 2** – Bridges in urban environments, near industrial and manufacturing plants, power plants, or warehouses, over heavy road traffic, or over waterways.
***Zone 3** – Bridges in marine environments, over or close to saltwater waterways, or over high speed state or interstate highways with potential for salt spray and heavy salt use and de-icing chemical use.
** Mil thickness on faying surfaces shall meet the requirements of the slip certificate.

Table 3.6.1-1: Application Requirements for Metalizing

3.6.1.3 For all steel rolled beam and plate girder bridges, the ratio of the length of span to the overall depth of the beam (depth of the beam plus thickness of the design slab) shall preferably not be greater than 21. This ratio may be exceeded where due to clearance and profile requirements a shallower structure is required. However, under no circumstances shall the span to depth ratio be greater than 25 nor shall the span to depth ratio of the steel section alone be greater than 30. For continuous spans, the span length used in calculating this ratio shall be taken as the distance between dead load points of contraflexure.

3.6.1.4 All welding and fabrication shall be in conformance with the AASHTO/AWS Bridge

Welding Code (AASHTO/AWS D1.5). The contract drawings shall clearly show the type of weld required. The drawings shall clearly distinguish between shop and field welds. For complete joint penetration (CJP) and partial penetration (PJP) groove welds, the drawings shall show the location and extent of the welds and, for the PJP welds, the required weld size. PJP groove welds shall not be allowed on main members. These weld symbols shall be shown as follows:

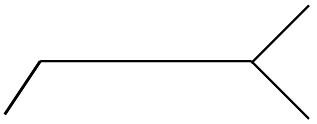

CJP

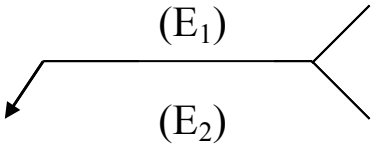

PJP

Where, E_1 and E_2 represent the effective throat size.
For fillet welds, the drawings shall show the location, size and extent of the weld as shown below.

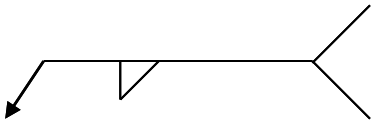

3.6.1.5 All structural steel shall meet the requirements of AASHTO M 270. Main members subject to tensile stresses only, need to conform to the applicable Charpy V-Notch (CVN) Impact Test requirements of AASHTO M 270. A Main Member is defined as any member making up the primary path that either the dead or live load takes from its point of application to its point of reaction onto the substructure, or in the case of steel bent piers, onto the foundation system. Some examples of main members are plate girders, floor beams, stringers, and diaphragms or cross frames on curved girder bridges. All other structural steel shall conform to AASHTO M 270, excluding the CVN tests. ASTM A709 is similar to AASHTO M 270 and may be used in lieu of M 270 provided that the applicable CVN requirements for main members are met.

3.6.1.6 Fracture critical members (FCM), or member components, are tension members or tension components of bending members (including those subject to the reversal of stress) whose failure may result in the collapse of the bridge. All FCM members and components shall be clearly designated on the contract drawings. All members and components designated as FCM are subject to the additional requirements of the Fracture Control Plan in the AASHTO/AWS Bridge Welding Code. Members and components not subject to tensile stress under any condition of live load are not fracture critical.

If a bridge has fracture critical members, the Designer must also prepare and submit, as part of the design deliverables, a Fracture Critical Inspection Procedure prepared in accordance with the requirements of Subsection 3.13.2 of this Bridge Manual.

For longitudinal box girder bridges, components of the girders which meet the FCM definition, shall be designated FCM if there are two or less box girders in the bridge cross section. For the case of a single span two box girder bridge cross section, the top flanges shall not be considered fracture critical.

For bridges with a truss-floorbeam(-stringer) or girder-floorbeam(-stringer) floor systems, the

floorbeams shall not be considered FCM if the spacing of the floorbeams is 12 feet or less and:

- The deck slab is designed to be continuous over the floorbeams with the main reinforcing placed parallel to the main trusses or girders.

- Or the stringers are placed on top of the floorbeams and at least every other stringer is continuous over a floorbeam.

In general, depending upon how they are connected to the primary members, secondary members, such as intermediate diaphragms on straight girder bridges, connection plates of diaphragms, transverse stiffeners, and lateral bracing should not be designated as fracture critical. Fracture critical requirements do not apply to temporary stages in construction.

3.6.1.7 The Designer shall locate and detail all field and transition splices. The location of these splices is dependent upon such factors as design criteria, available length of plates and members, ability to transport the members to the site, and erection and site limitations.

3.6.1.8 Where the Designer has an option to use either rolled beams without cover plates or welded plate girders for a structure, the Designer shall specify the rolled beams without cover plates. Some of the rolled beam sections may have limited production runs and may not be readily available. The Designer shall check to make sure that the specified sections are available. If the specified camber is excessive or if the structure has a radius less than 1200 feet, a welded plate girder design shall be considered instead of a rolled beam. Due to fabrication costs, rolled beams with cover plates should be considered as the last alternative.

3.6.2 Cover Plates

In situations where cover plates are necessary, the following provisions shall govern their use.

1. The minimum cover plate thickness shall be ½". For economy, it is preferable to use the same thickness cover plate on all similar size beams.

2. Bottom cover plates will be terminated not more than 2'-0" from the centerline of bearings or centerline of integral abutments, however the Designer must still check the fatigue stress range at the termination point.

3. Top cover plates, when used in the negative moment regions of continuous beams, shall extend beyond the theoretical end point by at least the terminal distance as defined in Article 6.10.12.2 of the *AASHTO LRFD Bridge Design Specifications*. Nonetheless, the actual termination point shall be determined by fatigue considerations.

4. The Designer shall design all cover plate to flange welds or shall verify the adequacy of the minimum weld sizes.

3.6.3 Welded Plate Girders

3.6.3.1 Minimum sizes for webs, flanges and welds, as well as detailing guidelines for plate girders, are given in Part II of this Bridge Manual.

3.6.3.2 The Designer shall first consider a web design that does not require the use of transverse stiffeners. If the required web thickness is excessive, a stiffened web will be considered; however the spacing of the transverse stiffeners will be as large as possible. Cross frame connection plates can be used as stiffeners if they meet the *AASHTO LRFD Bridge Design Specifications* requirements for stiffener plates. For aesthetics, transverse stiffeners shall not be placed on the outside face of the exterior girders.

3.6.3.3 Longitudinal web stiffeners shall be avoided unless required by design to avoid excessively thick, transversely stiffened webs. Typically, longitudinal stiffeners should only be considered for very deep girders. If longitudinal stiffeners are used, they shall be placed on the opposite side of the web from the un-paired transverse stiffeners. Under no circumstances will longitudinal and transverse stiffeners be allowed to intersect. Shop splices of longitudinal web stiffeners shall be full penetration butt welds, and shall be made before attachment to the web.

3.6.3.4 Flanges shall be sized as required by design, however for shipping and erection safety, the ratio of the shipping length to the width of the flanges shall be limited to 85 where practical, even at the expense of some additional steel.

3.6.3.5 The flange width may vary over the length of the girder; however constant width flanges are preferred. For longer spans where flange width transitions may be necessary, flange width transitions shall occur at the field splices. Top and bottom flanges need not be of the same width.

3.6.4 Welded Box Girders

3.6.4.1 In general, the requirements for Welded Plate Girders contained in Subsection 3.6.3 shall apply to welded box girders.

3.6.4.2 The length of top flange used for the calculation of the length to width ratios for flanges contained in Paragraph 3.6.3.4 above shall be based on the distance between internal shop-installed cross frames.

3.6.4.3 In general, the provisions for transverse web stiffeners contained in Paragraph 3.6.3.2 shall apply to box girders, except that all transverse stiffeners shall be placed in the interior of the box girder.

3.6.4.4 Longitudinal bottom flange stiffeners shall be avoided unless required by design to avoid excessively thick bottom flanges. Typically, longitudinal bottom flange stiffeners should only be considered for very wide flanges.

3.6.4.5 Box girder cross sections should be of a trapezoidal shape with webs sloped equally out from the bottom flange. Preferably, the minimum web depth shall be 6’-6” to allow for inspection access and maintenance activities inside the box girders. The minimum bottom flange width shall be 4’-0”. Shorter web depths and narrower bottom flange widths may be used with the written permission of the State Bridge Engineer. In general, box girders placed on superelevated cross sections shall be rotated so that the top and bottom flanges are parallel to the deck cross slope.

3.6.4.6 Girder spacing shall be maximized in order to reduce the number of girders required, thereby reducing the costs of fabrication, shipping, erection, and future maintenance. Spacing of the top flanges in a bridge cross section shall be approximately equal, however, the spacing may be

varied in accordance with *AASHTO LRFD Bridge Design Specifications* Article 6.11.2.3.

3.6.4.7 Utilities shall not be placed inside the box girders. This restriction shall also apply to scupper drain pipes and street lighting conduit.

3.6.4.8 At least two (2) access manholes shall be provided in the bottom flange of box girders. Alternatively, access shall be provided in the box girder ends at abutments. These manholes shall be located and detailed such that Bridge Inspectors can gain access without the need for special equipment.

The manholes shall have rounded corners fitted with a hinged cover that is lightweight and opens inward. If manhole doors are accessible from the ground without ladders or equipment, the doors shall be provided with an appropriate locking system to prevent unauthorized entry. Access holes shall be provided through all solid diaphragms. Stresses resulting from the introduction of access holes in steel members shall be investigated and kept within allowable limits.

3.6.4.9 The interior surfaces of box girders, including all structural steel components within the box girders (such as diaphragms, cross-frames, connection plates, etc.) shall be painted. The color of the interior paint shall be Gloss White (Federal Standard 595B Color Number 17925) in order to facilitate bridge inspection. In order that bridge inspectors can better orient themselves within the box girder, the distance from each box girder's West centerline of bearings, for bridges oriented generally west to east, or from the South centerline of bearings, for bridges oriented generally from south to north, shall be indicated in five (5) foot increments throughout the full length of each box girder. This indication shall consist of a vertical line ½" wide by 6" high with the measured distance given below the line in 5" high numerals painted in black color halfway up on the inside of the left girder web. This distance shall be measured without interruption from the reference end of the box girder to the other end and shall be sequential over intermediate bearings and/or field splices within each box girder but shall not be carried over between separate box girders within the same girder line.

3.6.4.10 Top flange lateral bracing shall be provided to increase the torsional stiffness of individual box girder sections during fabrication, erection, and placement of the deck slab. Permanent internal lateral bracing shall be connected to the top flanges.

Bracing members shall typically consist of equal leg angles or WT sections directly attached to the flange or attached to the flange via gusset plates. Gusset plates shall be bent to accommodate the difference in elevation between connections.

The bracing shall be designed to resist the torsional forces across the top of the section and the forces due to the placement of the deck, satisfying the stress and slenderness requirements. The lateral bracing connections to the top flange shall be designed to transfer bracing forces. Pratt type bracing should be considered because of efficiency. X-bracing patterns should be avoided for economy. Forces due to any loads applied after the deck is cured shall not be considered in the connection of the bracing members or their connections. Allowable fatigue stress ranges shall not be exceeded where the gusset plates are connected to the flange.

3.6.4.11 The welds between the web and flanges shall be comprised of double fillet welds except where welding equipment cannot be placed within the box during fabrication. For this case, a complete penetration groove weld shall be used with the backing bar on the inside and a reinforcing fillet weld on the outside. Backing bars shall be continuous. Backing bars shall be used inside the

box and shall be made continuous. Testing of welded splices in backup bars shall be treated similarly to flange splices.

3.6.5 Splices and Connections

3.6.5.1 Definitions. The term "Gusset Plate" shall only be used to refer to the plates that connect the main load carrying members of a truss (i.e. diagonals, verticals and chords) at a panel point. All other plates used to connect secondary members to each other or to the primary members shall be called "Connection Plates".

3.6.5.2 In general, all field connections shall be made with high strength bolts conforming to the requirements of ASTM A325. All structural connections shall be designed as Slip-Critical connections. ASTM A490 bolts shall not be used, except with written permission of the State Bridge Engineer.

3.6.5.3 Field splices in beams and girders, when necessary, shall generally be located as follows:

- Continuous Spans: Points of Dead Load contraflexure
- Simple Span: Quarter Point

3.6.5.4 Field splices shall generally be made using 7/8" ∅ high strength bolts. For large repetitive connections, the use of larger bolts shall be evaluated if a significant number of bolts could be saved. All bolts used in a splice shall be of the same diameter. Filler plates shall not be less than ⅛" thick and shall extend to the limits of the splice plate. Field splices of flanges and webs shall not be offset.

3.6.5.5 Transverse stiffeners will be located as specified in Part II of this Bridge Manual so that they do not coincide with the splice plates. If stiffeners in the area of a bolted splice are unavoidable, bolted steel angles shall be used as stiffeners instead of plates welded to the splice plates.

3.6.5.6 All shop welded splices shall have flange splices offset 1'-0" from the web splice. As welded flange splices are costly, a savings of approximately 1300 pounds of steel should be realized in order to justify the cost of the flange splice. Due to the cost of making a full penetration welded flange splice, the number of changes to the flange thickness should be kept to a minimum but in no instance shall exceed 3 different sizes between bolted splices. A savings of approximately 1300 pounds of steel per splice should be realized in order to justify the cost of the flange splice. When a girder flange is butt spliced, the thinner segment shall be not less than one-half the thickness of the adjoining segment.

3.7 PRESTRESSED CONCRETE SUPERSTRUCTURES

3.7.1 Standard Beam Sections

3.7.1.1 Standard AASHTO - PCI precast concrete deck, box, Northeast Bulb Tee (NEBT), or NEXT beam sections as detailed in Part II of this Bridge Manual are to be used to construct precast concrete bridge superstructures. Other sections may be used where the situation precludes the use of standard sections and prior written approval has been obtained from the State Bridge Engineer, or where so permitted by this Bridge Manual.

3.7.1.2 The standard beam sections were developed in conjunction with PCI New England and meet the fabrication tolerances and practices of most regional precasters. If a particular design requires that major alterations be made to the standard details, such as the placement of strands in locations other than those shown or different reinforcing details, it will be the Designer's responsibility to ensure that the design can be fabricated by a majority of area precasters.

3.7.1.3 In adjacent precast beam superstructures, the beams should be placed to follow the roadway cross slope as much as is practical. On bridges with a Utility Bay under the sidewalk, the sidewalk beam need not be placed to follow the cross slope, unless a deeper sidewalk depth is required over this beam for railing/traffic barrier attachments. For NEBT or spread box beam bridges, the beams shall be placed plumb and a deck haunch deep enough to accommodate the drop of deck across the width of the beam flange shall be provided.

3.7.2 Materials and Fabrication

3.7.2.1 Concrete Strength. Designs should be based on a concrete compressive strength (f'_c) of 6500 psi. If needed by design to avoid going to a deeper beam, a concrete compressive strength of 8000 psi may be used. Use of concrete strengths other than these two standard mixes is discouraged, since this will require the precaster to prepare special mix designs and get them approved by MassDOT prior to fabrication, which will delay the start of fabrication and add to the cost of the beams.

In general, the concrete compressive strength at release (f'_{ci}) shall be taken as 4500 psi. Higher concrete release strengths, up to 0.8 f'_c, may be used only if required by design in order to avoid going to a deeper beam. Concrete release strengths greater than 0.8 f'_c shall not be used.

3.7.2.2 Prestressing Strands. Only Low Relaxation strands meeting the requirements of AASHTO M 203 shall be used as required by MassDOT Specifications. Strands shall be 0.6” in diameter and shall not be epoxy coated. Beams shall be fabricated with the prestressing strand layout as shown on the Construction Drawings. The concrete gross section shall be used to compute section properties (the transformed area of the prestressing strands shall not be used for this purpose).

For ease of fabrication, precasters prefer to use straight, debonded strands over draped strands in order to reduce the tensile stresses at the ends of box beams and NEBT beams. The draping of strands shall be used only if debonding alone, due to the limitations imposed on de-bonding as specified below, will still result in unacceptably high tensile stresses. In this situation, mixing draped and debonded strands in a beam will be permitted. For deck beams, due to their detailing, draped strands cannot be used.

Where debonded strands are used, no more than 25% of the total number of strands and no more than 40% of the strands in each row shall be debonded. In addition, no more than 40% of the debonded strands, or four (4) strands, whichever is greater, shall have the debonding terminated at any one section.

The spacing between debonded strands in a layer shall be 4” minimum. Exterior strands in each layer shall be fully bonded. In general, the length of debonded strand from each end of the beam should be limited to approximately 15% of the span length.

Where draped strands are used, the total hold down force of all draped strands for each beam shall not exceed 75% of the total beam weight.

3.7.2.3 Reinforcing Steel. All non-prestressed reinforcement shall be epoxy coated Grade 60

reinforcing steel. It is the Designer's responsibility to detail the beams so that all reinforcement is embedded, developed or lapped as required. In the case of adjacent deck or box beams, the size of the void may need to be reduced (or eliminated for deck beams only) to allow for proper bar development of barrier reinforcement, as noted in Part II of this Bridge Manual.

3.7.2.4 Utility Supports. The steel for all utility supports shall conform to AASHTO M 270 Grade 36, and shall be galvanized. All inserts for the attachment of utilities will be cast into the beam at the time of its fabrication. Under no circumstances shall expansion type anchors be allowed. Inserts that are being provided for a future utility installation shall be furnished with a plastic plug that is the same color as the concrete. Once the beam is cast, the drilling of holes for attachments will not be permitted.

3.7.3 General Design Requirements

3.7.3.1 All prestressed beams shall be designed for all applicable limit states and for all loading conditions according to Article 3.4 of the *AASHTO LRFD Bridge Design Specifications,* except where modified and/or amended by this section.

3.7.3.2 All prestressed beams shall be designed to have no more than $0.0948\sqrt{f'_c}$ ksi tension in the pre-compressed tensile zone under Service III limit state after all losses have occurred. If the only way to reduce these tensile stresses is to go to the next larger beam size and the depth of structure is critical, tensile stresses up to a maximum of $0.19\sqrt{f'_c}$ ksi will be permitted. In this case a live load factor of 1.0 for the Service III Load Combination should be used.

3.7.3.3 The design of stirrups for shear reinforcement shall be performed in accordance with Article 5.8 of the *AASHTO LRFD Bridge Design Specifications*, except that neither the minimum bar size nor the maximum spacing, as noted in Part II of this Bridge Manual, shall be violated.

For adjacent box beams, the top transverse U-shaped bars (#4@7") as well as the top longitudinal #4 reinforcing bars have been pre-designed as slab reinforcement and spaced accordingly; however, the bottom transverse #4 U-shaped bars shall be designed so that their vertical legs satisfy shear reinforcement requirements of Article 5.8 of the *AASHTO LRFD Bridge Design Specifications* and are spaced at a multiple of the top U-shaped bars. The top and bottom U-shaped bars shall be lapped to form the transverse stirrups.

3.7.3.4 Horizontal shear reinforcement for making decks composite with precast beams shall be designed in accordance with Article 5.8.4 of the *AASHTO LRFD Bridge Design Specifications* except that neither the minimum bar size nor the maximum spacing, as noted in Part II of this Bridge Manual, shall be violated.

3.7.3.5 End transverse stirrups and end vertical stirrups shall be provided as shown in Part II of this Bridge Manual and shall be designed to satisfy Article 5.10.10 of the *AASHTO LRFD Bridge Design Specifications* for splitting resistance of pretentioned anchorage zones. These bars should be placed within a distance h/4, as defined in the referenced Article depending on the type of the beam, from the end of a beam and should be either #4 or #5 bars. If using #5 bars, the lap length and embedment length shall be adjusted as needed.

3.7.4 Continuity Design for Prestressed Concrete Beam Bridges

3.7.4.1 General. The procedures outlined here are for multi-span bridges composed of precast spread and adjacent deck and box beams, NEBT beams and NEXT beams with continuity diaphragms cast between ends of girders at piers that are made continuous without the use of post-tensioning. These superstructures shall be designed per Article 5.14.1.4 of the *AASHTO LRFD Bridge Design Specifications* as simple span beams for all non-composite dead loads and as continuous beams for all composite dead loads and live loads applied after continuity is established and shall be detailed as per Part II and Part III of this Bridge Manual.

3.7.4.2 Design and Detailing. The connection between precast girders at a continuity diaphragm (i.e. the closure pour) shall be considered partially effective and shall be designed for all effects that cause moment at the connection, including restraint moments from time-dependent or other deformations. These restraint moments shall not be included in any combination when the effect of the restraint moment will reduce the total design moment.

Both a negative and a positive moment connections are required for continuity diaphragms. They shall be designed and detailed as per Articles 5.14.1.4.8 and 5.14.1.4.9 of the *AASHTO LRFD Bridge Design Specifications*, respectively.

Multi-span bridges constructed of precast spread and adjacent deck and box beams, NEBT beams and NEXT F beams shall be designed compositely with the cast-in-place deck slab with the continuity reinforcement placed in the deck slab. Gross composite girder section properties, ignoring any deck cracking, may be used for analysis. The design compressive strength (f'_c) of the prestressed girder as well as its bottom flange width shall be used to calculate flexural resistance of the continuity reinforcement used for the negative moment connection over a pier.

Presently, MassDOT's practice is to extend prestressing strands beyond the end of the girder and anchor them into the continuity diaphragm to establish a positive moment connection. Only fully bonded strands in the bottom row shall be used for this purpose.

3.7.5 Design of NEBT Beams Post-Tensioned for Continuity

3.7.5.1 NEBT Beams were developed so that they could be post-tensioned to be fully continuous (i.e. continuous for all dead loads and live loads) or to splice several segments together to form continuous beams longer than what could be achieved by using the simple span procedures in Subsection 3.7.4. Designers should consider the benefits of post-tensioned continuity when evaluating NEBT beam superstructures.

3.7.5.2 At present, this Bridge Manual does not contain details for the post-tensioning NEBT beams. For more information and for details, Designers shall refer to PCI Northeast Report PCINER-01-PTDG, which can be downloaded from the URL: www.pcine.org.

3.7.5.3 NEBT Beams post-tensioned for continuity or spliced to form longer continuous beams shall be designed in accordance with Article 5.14.1.3 of the *AASHTO LRFD Bridge Design Specifications*.

3.7.5.4 Since the post-tensioning ducts need to be filled with grout after the tendons have been stressed, the grout to be used, the proper procedures to be followed, and venting of the ducts to ensure that they will be filed without voids are critical. The Designer shall confer with the Bridge Section

about all of these requirements.

3.8 ADJACENT PRECAST PRESTRESSED CONCRETE DECK AND BOX BEAM BRIDGES

3.8.1 General Requirements

3.8.1.1 Background. In the past, adjacent precast prestressed concrete deck and box beam bridges were built with just a membrane and HMA wearing surface placed directly on top of the beams of these bridges. Over the years, this type of construction has suffered from shear keys that deteriorated and leaked, leading to the deterioration of the beams themselves. This was especially so for bridges with high ADT's and ADTT's. In the early 2000's MassDOT restricted this type of adjacent deck and box beam construction to bridges with ADT's of less than 5,000. Since the 2005 Bridge Manual, MassDOT has required the use of a 5" minimum thickness cast in place reinforced concrete deck slab on top of these beam systems and removed the ADT restriction. The purpose of this deck was twofold. First, it would reduce the fatigue on the shear keys because the deck would help distribute the live load between the beams. Second, it would be a sacrificial element that could be replaced without replacing the adjacent beam system itself.

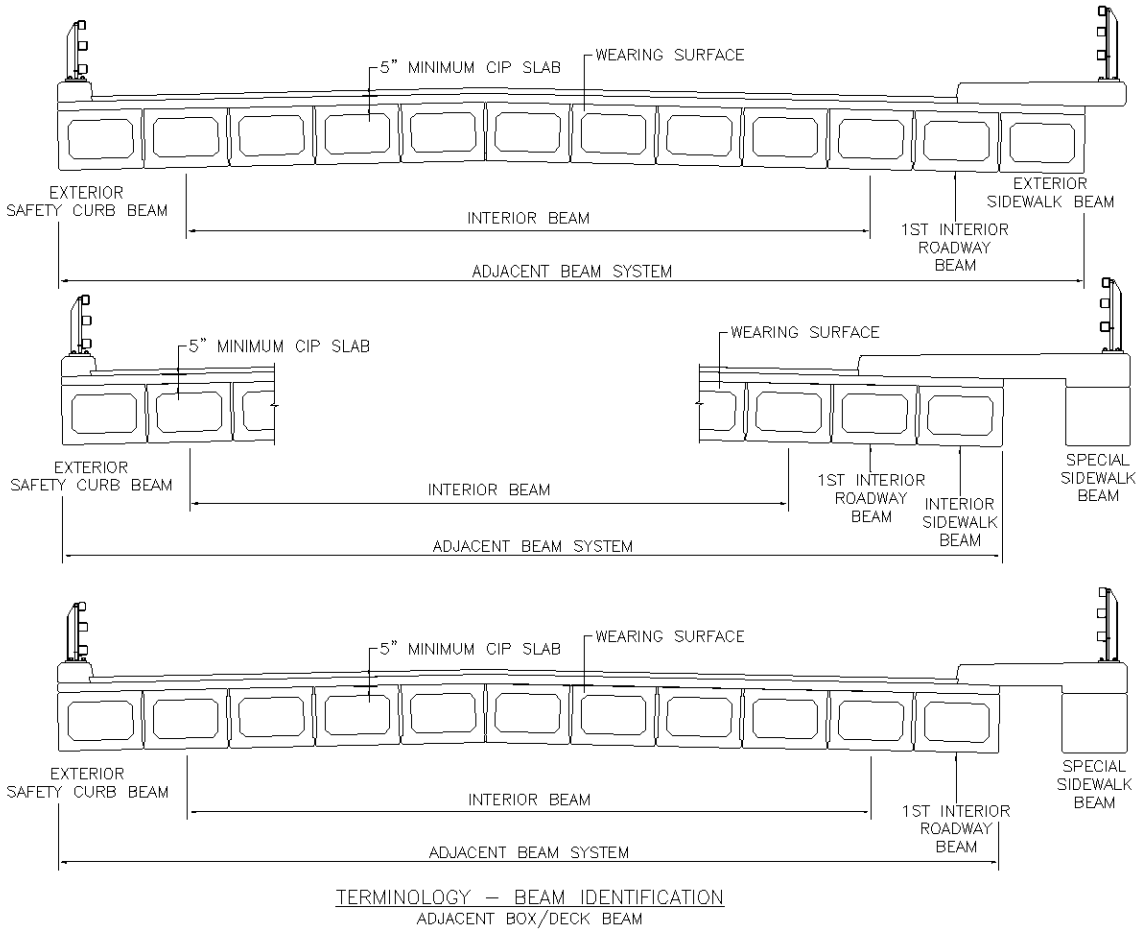

Figure 3.8.1-1

3.8.1.2 This type of bridge is considered to be Typical Cross Section (f) as shown in the *AASHTO LRFD Bridge Design Specifications*, Table 4.6.2.2.1-1.

The beams in the adjacent beam systems shall be designed to be composite with this deck slab by casting dowels into the beams that have been designed for horizontal shear as specified in Article 5.8.4 of the *AASHTO LRFD Bridge Design Specifications*.

3.8.1.3 Utility Bay under Sidewalk and Special Sidewalk Beam. The special sidewalk beam as defined in Figure 3.8.1-1 may be either a standard PCI New England deck or box beam section or a rectangular solid precast prestressed beam. NEBT beams shall not be used for this application. If the sidewalk is wide enough to accommodate two or more standard PCI New England deck or box beam sections as special sidewalk beams, provide longitudinal joints and transverse ties between them as for regular adjacent beams and distribute Superimposed Dead Loads, Pedestrian Loads and Live Loads to each sidewalk beam using the procedures outlined in Subsection 3.8.2.

The special sidewalk beam(s) shall be designed to be composite with the sidewalk slab. The dowels cast into the beam(s) shall be designed for horizontal shear as specified in Article 5.8.4 of the *AASHTO LRFD Bridge Design Specifications*. The effective width of the slab shall extend to mid-bay.

3.8.2 Distribution of Loads to Adjacent Precast Prestressed Concrete Beam Bridges

3.8.2.1 The distribution of loads to these bridges shall be in accordance with Subsection 3.5.3, except as modified by this Subsection. The HL-93 live load shall be distributed in accordance with the *AASHTO LRFD Bridge Design Specifications* distribution procedures for these types of bridges assuming that the beams are non-composite, however, the composite section properties shall be used to design the beams and to check stresses.

3.8.2.2 Superimposed Dead Load Distribution (DC2) and Pedestrian Load (PL)**.** For adjacent beam systems without a special sidewalk beam, see Figure 3.8.2-1 below. In using the pile cap analogy model to distribute these loads to the exterior sidewalk beam, the 1st interior roadway beam and the exterior safety curb beam, the theoretical point of support provided by a beam shall be located at its centerline. When using the pile cap analogy, the relative individual stiffness of the beams shall be ignored, i.e. A = 1.0 for all beams, since the unequal spacing of the pile cap points of supports approximates this effect. The Pile Cap analogy as referenced in the *AASHTO LRFD Bridge Design Specifications* Article 4.6.2.2.2d is used for distributing the HL-93 Live Load to exterior beams in beam-slab bridge cross sections, and so, is not used for live load distribution to bridges with a Typical Cross Section (f). However, MassDOT does not consider that an equal distribution of the sidewalk slab or safety curb/barrier loads accurately models the actual distribution of these loads to the beams in the adjacent beam system. Therefore, MassDOT considers the pile cap analogy to be a better dead load distribution model and applies it here in lieu of a simplistic 60% distribution as was used in the past.

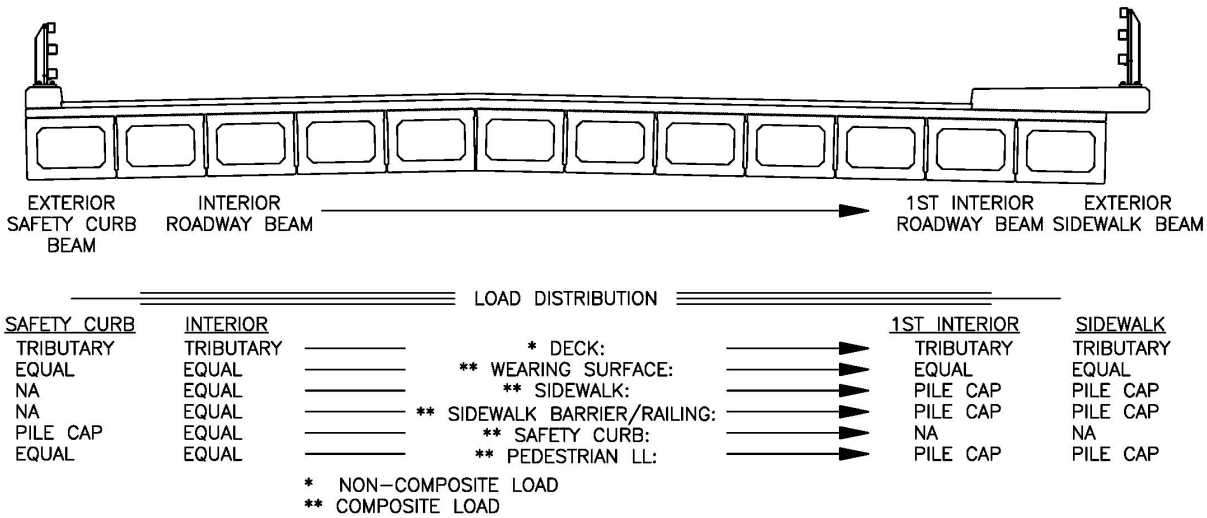

Figure 3.8.2-1

For adjacent beam systems with a special sidewalk beam, see Figure 3.8.2-2 below. The sidewalk slab is placed non-compositely and shall be distributed by tributary area as a non-composite dead load to the special sidewalk beam while the full sidewalk railing/barrier load and tributary area of the pedestrian load shall be applied as composite loads. The wearing surface dead load that is applied to the adjacent beam system shall not be applied to the special sidewalk beam. Similarly, the sidewalk railing/barrier load is fully applied to the special sidewalk beam and is not distributed to beams of the adjacent beam system. The rationale behind this distribution is that the special sidewalk beam, because it is not connected to the rest of the adjacent beam system with shear keys, it will deflect semi-independently of the adjacent beam system. Therefore, this load distribution is a simple but conservative.

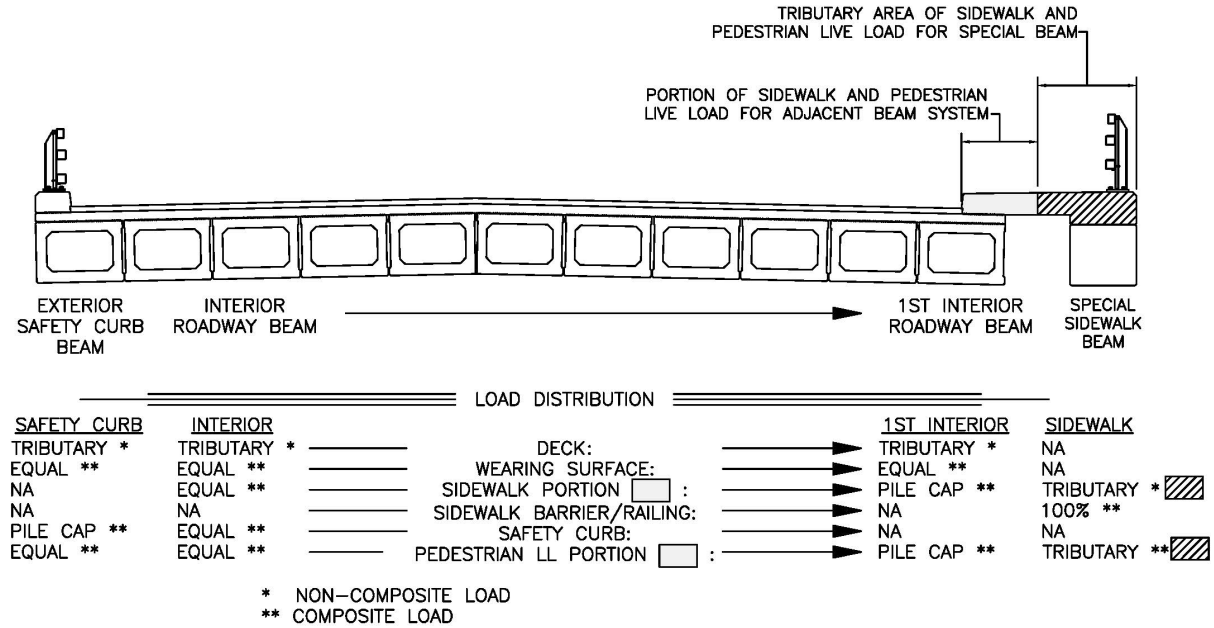

Figure 3.8.2-2

3.8.2.3 For bridges with a configuration similar to Bridge Manual Drawings 4.3.1 or 4.3.2 (see Figure 3.8.2-3 below), with or without utilities, Paragraph 3.5.3.11, Case II (Truck on Sidewalk) shall be ignored since the AASHTO live load distribution factors account for the effect of the truck on the exterior sidewalk beam.

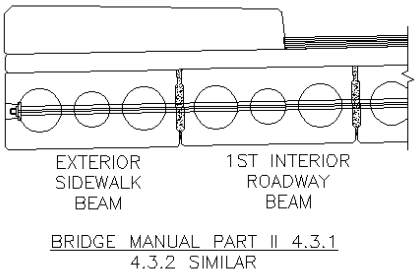

Figure 3.8.2-3

3.8.2.4 For bridges with a configuration similar to Bridge Manual Drawings 4.3.3 or 4.3.4 (see Figure 3.8.2-4 below), with or without utilities, Paragraph 3.5.3.11 Case I shall be modified by considering the 1st Interior Roadway Beam to be an exterior beam for distribution of live load purposes and the Special Sidewalk Beam shall not be considered in this case. Case II shall be

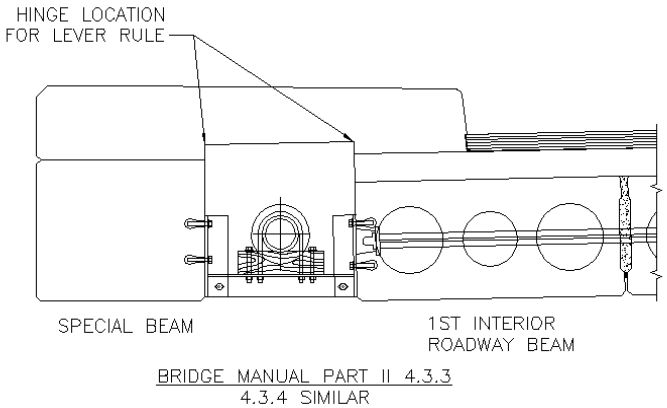

Figure 3.8.2-4

modified by distributing the wheel lines as follows: if the wheel line is located anywhere over the special sidewalk beam, apply 100% of the wheel line load to this beam; if the wheel line is located over the utility bay (between the beams), distribute the wheel line load to the special sidewalk beam using the lever rule and assuming that the hinges are placed at the edge of the beams supporting the sidewalk slab span. Depending on the width of the sidewalk, use one or both wheel lines. The load carrying effect of the 1st Interior Roadway Beam shall not be used to reduce the live load effect on the special sidewalk beam. If there is more than one Special Sidewalk Beam, the wheel load effects that are to be distributed to the special sidewalk beams using the above procedures shall be divided equally among all of these beams.

3.8.2.5 Effect of Different Moments of Inertia on the Distribution of Loads to all beams in the adjacent beam system. If beams of different Moments of Inertia are used together in an adjacent beam superstructure, the Superimposed Dead Loads and Pedestrian Load (if any) shall be distributed to each

beam in the adjacent beam system in proportion to its Moment of Inertia according to the following formula:

$$L.D.F._k = \frac{I_k}{\sum_{i=1}^{n} I_i}$$

In the formula above, $L.D.F._k$ is the load distribution factor for the kth beam, I_k is the Moment of Inertia of the kth beam, and I_1 ... I_n are the Moments of Inertia of each beam in the adjacent beam system.

The live load distribution factors as computed per Section 4 of the *AASHTO LRFD Bridge Design Specifications* are a function of the beam's width and Moment of Inertia, and therefore, no further distribution of Live Load is required.

3.8.2.6 Design of the Sidewalk Slab over a Utility Bay. The sidewalk slab shall be designed for the differential deflection between the adjacent roadway beam system and the special sidewalk beam(s).

STEP 1: Calculate the deflection of the adjacent roadway beam system by placing the factored HL-93 loads in each of the actual travel lanes (not the AASHTO design lanes) and assuming that all adjacent beams act and deflect together.

Step 2: Calculate the equivalent uniformly distributed load (per foot of beam) that would cause the same deflection in the special sidewalk beam as calculated in Step 1. Use the composite section properties. If there are two or more special sidewalk beams, calculate the load that would deflect all special sidewalk beams at once. Since this load was derived by using factored HL-93 loads, it is considered to be a factored load.

STEP 3: The sidewalk slab shall be considered a cantilever beam with a length equal to the clear width of the utility bay. The factored design load shall be the uniform load calculated in Step 2 and applied at the free end of the cantilever. Assume the section to be singly reinforced and use the smallest *d* dimension. Design the required steel area using factored resistance and provide it for both top and bottom transverse slab reinforcement. Spacing of these bars should be at a multiple of the sidewalk dowels of the first interior roadway beam.

STEP 4: Design the sidewalk dowels that connect the sidewalk slab to the first interior roadway beam to concurrently resist the design moment used to design the sidewalk slab in Step 3 and the equivalent factored load calculated in Step 2. Factored resistances shall be used.

If excessive steel areas are required, consideration should be given first to increasing the depth of the sidewalk slab and, second, by providing intermediate diaphragms. The intermediate diaphragms need only be designed for the load in excess of the slab capacity.

3.8.3 Utilities on Adjacent Precast Prestressed Concrete Deck and Box Beam Bridges

3.8.3.1 General. Utilities shall be located as shown in Section 4.3 of Part II of this Bridge Manual. Preference shall be given to locating the utilities in the utility bay under the sidewalk wherever possible. Under no circumstances shall utilities be located inside the beams within the void.

The utility supports shown in Part II of this Bridge Manual represent acceptable configurations. Where utility support member, bolt and insert sizes are provided, these supports may be used up to the limits shown without further design. These supports may have to be altered depending on the utility. If an increase in the side clearance of the utility bay is required, the L4x4x½ attached to the side of the beam may be replaced by an attachment using a section of WT. In these cases, the Designer is responsible for the design of the utility supports. In all cases, the utility supports must be adequately detailed on the Construction Drawings.

For utilities supported similar to Bridge Manual Drawings 4.3.3 or 4.3.4 (see Figure 3.8.3-1 below), the utility loads shall be considered non-composite and generally be assumed to be equally distributed to

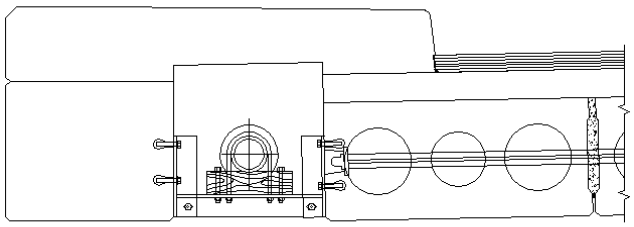

BRIDGE MANUAL PART II 4.3.3
4.3.4 SIMILAR

Figure 3.8.3-1

the beams that support them on either side of the utility bay.

For utilities supported similar to Bridge Manual Drawings 4.3.5 or 4.3.6 (see Figure 3.8.3-2 below), these loads shall be considered composite and be distributed using the Pile Cap analogy.

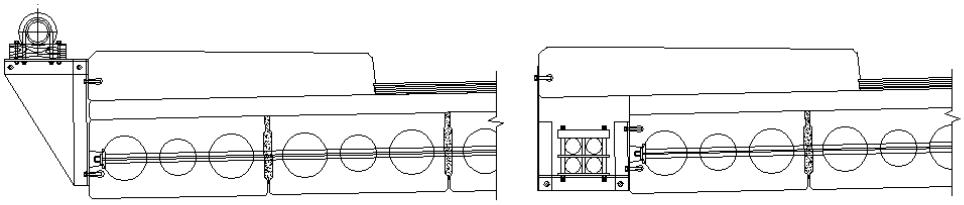

BRIDGE MANUAL PART II 4.3.5
4.3.6 SIMILAR

Figure 3.8.3-2

Whenever a utility is attached to the exterior of an adjacent beam bridge, the torsional effect of such an attachment may cause unequal reactions at the bearings. This effect may be compounded by additional eccentric loads, such as either a sidewalk overhang or a safety curb with a railing/barrier, which does not extend over to the second interior beam. To help equalize the reactions at the bearings, consideration should be given to increasing the number of transverse ties.

3.9 PRECAST CONCRETE FULL DEPTH DECK PANELS (FDDP)

3.9.1 General

3.9.1.1 Applicability. Precast Concrete Full Depth Deck Panels (FDDP) as detailed in Part III of this Bridge Manual may be used for new bridge deck construction as well as for replacement of the existing bridge decks. The roadway profile grade shall not exceed 4%. Spray applied membrane waterproofing and a hot mix asphalt wearing surface shall be used on all bridge decks constructed with FDDP.

Full depth deck panels details included in Part III of this Bridge Manual are longitudinally post tensioned. Full depth deck panels that are connected using reinforced cast–in-place closure pours will be permitted for specific projects with prior approval from the State Bridge Engineer.

3.9.1.2 Structure Types. FDDP can be used on practically any bridge structure that is presently designed with the cast-in-place deck. Steel Stringers, Steel Girder/Floorbeam Systems, Steel Truss Systems, Precast Prestressed Concrete Beams (Box and NEBT), as well as Suspension and Cable Stayed Systems are the types of bridge structure that can be designed with FDDP.

3.9.1.3 Framing Geometry and Layout. For straight bridges FDDP shall be laid out as detailed in Part III of this Bridge Manual. They shall be set to match the cross slope of the finished roadway. For bridges with the superelevated deck, no roadway crown, and the total out-to-out width of the deck not exceeding 40 feet, a single precast deck panel can be used to cover the entire width of the bridge. To accommodate roadway crowns, stage construction joints, bridges with out-to-out width greater than 40 feet, and bridge widening projects the longitudinal cast-in-place closure pour(s) should be used. It has to be detailed and constructed as per Part III of this Bridge Manual.

For horizontally curved bridges FDDP can be cast in a trapezoidal shape so that the transverse joints between the individual panels are radial to the curve.

3.9.2 Materials and Fabrication

3.9.2.1 Concrete Stresses. Standard size FDDP shall be made of 4000 psi, ¾” in, 585 HP cement concrete. If beam spacing exceeds 10 feet the pre-tensioning of the deck panels or increase in their thickness may be required in order to amplify flexural resistance of the panels. If the pre-tensioning is used, the design of the deck panels shall be based on a concrete compressive strength (f'_c) of 6,500 psi. The concrete compressive strength at release (f'_{ci}) shall be taken as 4500 psi.

3.9.2.2 Prestressing Strands. Only Low Relaxation strands meeting the requirements of AASHTO M203 shall be used as required by MassDOT Specifications. Strands shall be 0.6” in diameter and shall not be epoxy coated. Typical strand pattern shall be laid out with zero eccentricity in order to resist the positive as well as negative moments in the panels and to minimize the cambering of the deck slabs after casting. FDDP shall be fabricated with the prestressing strand layout as shown on the Construction Drawings.

3.9.2.3 Mild Reinforcing Steel. All mild reinforcement shall be epoxy coated Grade 60 reinforcing steel and shall be provided and detailed as per Part II of this Bridge Manual.

3.9.2.4 Post-Tensioning Ducts and Anchorage Devices. Only 2” nominal diameter post-tensioning ducts with a maximum of four (4) 0.6”- diameter prestressing strands shall be used in construction of

FDDP. Plastic and galvanized metal ducts are both acceptable. They shall be used in conjunction with the flat anchorage assemblies, which are to be located and detailed as per Part III of this Bridge Manual. When locating the anchorage assemblies, smaller horizontal dimensions measured from panel edges as well as from the edge of the shear connector blockouts can be used, provided that the anchorage forces are accounted for in the design of the panels.

3.9.2.5 Tolerances. FDDP fabrication and erection tolerances shall be provided on the Construction Drawings. It is very important to have many of the fabrication tolerances measured from a common working point or line that is shown on the shop drawings. Center-to-center measurements can lead to a build-up of measuring errors and unacceptable results. Special attention should be given to the location of the longitudinal post-tensioning ducts. Misalignment of these ducts can cause considerable problems in the field. In addition, to avoid flexing of the plastic ducts during concrete placement, it is recommended to properly secure the ducts to the deck panel reinforcing or to stiffen them by attaching them to a parallel reinforcing bar.

3.9.3 General Design Requirements

3.9.3.1 General. The design of precast deck panels shall be the same as for a cast-in-place concrete deck. The "strip method" of design shall be used as per the *AASHTO LRFD Bridge Design Specifications.* Deck panels may be reinforced using mild reinforcement, prestressing, or a combination of both. The design of the deck shall follow normal sectional design requirements as per the *AASHTO LRFD Bridge Design Specifications.* The spacing of reinforcement shall account for the presence of shear connector blockouts, anchorage assemblies, and hand holes. Special care should be used for the detailing of deck overhangs. Barrier and overhang reinforcement details may need to be adjusted to account for the locations and sizes of shear connector blockouts.

3.9.3.2 Mild Reinforcement. All transverse (primary) and longitudinal mild reinforcement for FDDP shall be as per details provided in Part III of this Bridge Manual. Longitudinal deck distribution reinforcement (parallel to girders) does not need to pass through the transverse joints between the individual deck panels. The spacing of transverse and longitudinal steel will need to be adjusted to avoid interference with shear connector blockouts, leveling devices, etc. and to provide the proper cover.

3.9.3.3 Longitudinal Post-Tensioning. Longitudinal post-tensioning shall be used to provide compression between individual deck panels. The post-tensioning shall provide a minimum of 250 psi of prestress after short-term losses due to anchorage set friction, and elastic shortening. Time dependent losses in longitudinal post-tensioning need not be accounted for in the design. For continuous spans, the Designer shall design for and provide additional prestress to overcome the tensile stress due to unfactored negative composite dead and live load moments and maintain a net prestress of 250 psi compression in the negative moment region. This may not be practical for long span bridges and alternate deck systems may need to be investigated. Since net compression is maintained in the deck, the Designer need not provide the one percent of the deck area steel requirement per the *AASHTO LRFD Bridge Design Specifications*, Article 6.10.1.7.

The calculation of the post-tensioning forces including the number of strands shall be based on assumed values for friction, wobble and anchorage set as per the *AASHTO LRFD Bridge Design Specifications.* The minimum final post-tensioning force per tendon and the minimum effective prestress shall be shown on the plans, as well as a sequence for stressing the tendons (generally starting at the center and working to the outside). The plans shall note the assumptions used to develop the post-

tensioning force including the assumptions used for loss calculations. The project specifications shall include requirements for submission of calculations for the design of the post-tensioning system. The final design of the post-tensioning is the responsibility of the Contractor, and shall account for the hardware chosen for the construction of the deck.

The post-tensioning ducts on horizontally curved bridges with curved beams shall follow the roadway curvature. The ducts on bridges with minor curves and straight beams can be placed parallel to the girders. The design of the longitudinal post-tensioning for bridges with curved ducts shall take into account the friction losses in the post-tensioning ducts due to the curvature. In the case of large radius horizontal curves, it is acceptable to run the post-tensioning ducts straight within each individual deck panel combined with small angle points at the hand hole duct splice location.

3.9.3.4 Anchorage Zones. The design of the local zone reinforcement shall be the responsibility of the Contractor. The design of general zone reinforcement shall be the responsibility of the Designer. Local zone and general zone reinforcement shall be designed according to Article 5.10.9.2 of the *AASHTO LRFD Bridge Design Specifications.*

3.9.3.5 Composite Action. FDDP shall be made composite with the supporting beams. Composite action shall be achieved with shear connectors placed in blockouts in the deck panels. The design of the shear connectors shall be the same as for a cast-in-place concrete deck, except that the spacing of the shear connectors shall coincide with the spacing of the shear connector blockouts. Shear connectors shall consist of welded studs (for Steel Stringers, Prestressed Concrete Box and NEBT beams) or epoxy coated reinforcement extending from the top of the girders (for NEBT beams only) and shall be detailed as per Part III of this Bridge Manual.

3.9.3.6 Continuous Spans. The longitudinal post-tensioning may be used for the design of continuous girders in negative bending regions. The post-tensioning tendons may be accounted for in the calculation of the ultimate strength of the girder.

3.9.3.7 Girder Haunches. The design and detailing of the forming for the girder haunches is the responsibility of the Contractor and shall not be shown on the plans. The height of the girder haunches shall be the same as for cast-in-place concrete except on steel girder bridges with bolted splices. In this case, the height of the haunches may need to be increased to accommodate the splice plates and bolt heads. The nuts may be installed on the underside of the flange splice plate, provided that there is no conflict with the installation of the web splice bolts.

3.9.3.8 Handling. The design of lifting hardware and the handling stresses within the deck panel is the responsibility of the Contractor. Specifications shall require that lifting hardware shall be designed in accordance with the provisions of the latest edition of the PCI Design Handbook. The criteria for "no discernable cracking" shall be followed. The design for handling shall account for the presences of all blockouts.

3.9.4 Construction

3.9.4.1 Construction Sequence. The sequence of construction for FDDP shall be such that the longitudinal post-tensioning is done after the transverse joints between the individual deck panels have been grouted and before they have been made composite with the girders. This sequence of construction assures that post-tensioning will not introduce additional bending moment into the girders, which could be detrimental to their performance. The sequence of construction shall be clearly outlined

on the Construction Drawings.

3.9.4.2 FDDP Grade Elevations. The anticipated grade elevations of each corner of each deck panel after all deck panels are placed on a span and after all composite dead loads are applied must be provided on the Construction Drawings. These elevations are to be calculated as follows:

1. Calculate the theoretical finished roadway grade elevation directly over the deck panel at four (4) corners of each panel along the bridge span.

2. From these elevations, subtract the total thickness of the wearing surface and membrane waterproofing.

3. To the above elevations add the total dead load deflection due to all composite dead loads applied after the deck panels have been placed including, but not limited to the wearing surface, sidewalks, safety curbs, and rail/barrier systems. The result is the grade elevations of each deck panel corners that have to be provided on the Construction Drawings.

3.9.4.3 Vertical Adjustment. Vertical adjustment assemblies shall be used to assist in the equal deck panel weight distribution as well as to alter the grade elevations of the deck panels after their placement. The leveling devices shall be designed by the Contractor and shall meet the following criteria::

- The leveling devices shall be detailed so that all hardware that is to remain in place is set within a grouted recess with adequate cover.

- Portions of the leveling devices projecting from the deck, or not having adequate cover shall be removed after placement of the non-shrink grout.

3.9.4.4 Horizontal Adjustment. Horizontal adjustment of FDDP is achieved by providing the transverse joints between individual deck panels with a nominal width of ½". The width of these joints shall be adjusted in the field by ± 3/8" to account for fabrication and erection tolerances.

The layout of panels in the field shall be based off common working lines (transverse and longitudinal). The transverse alignment of panels shall be based on a longitudinal working line, not the deck edge or girder alignment. The use of girder lines for alignment is not recommended due to the fact that the girders may not be perfectly straight (but within tolerance) after installation.

3.10 DESIGN AND ANALYSIS OF INTEGRAL ABUTMENT BRIDGES

3.10.1 General

Integral abutment bridges (IAB) are single-span or multiple-span continuous structures with each abutment rigidly connected to the superstructure and supported by a single row of flexible vertical piles. The primary purpose of rigid connection is to eliminate the need for deck movement joints and bearings at abutments.

Integral abutment bridges differ from traditional rigid frame bridges in the manner which movement is accommodated. Rigid frame bridges resist the effects of temperature change, creep and shrinkage with full height abutment walls that are fixed or pinned at the footing level. The effects produced by

longitudinal forces in integral abutment bridges are accommodated by designing the abutments to move with less induced strain, thus permitting the use of smaller and lighter abutments.

3.10.2 Loads, Load Factors, and Load Combinations

3.10.2.1 Permanent Loads. Permanent Loads on the abutments include the dead weight of the girders, deck and approach slab, integral wingwalls, intermediate diaphragms, and the abutment diaphragm. The weight of the wearing surface, sidewalks and safety curbs, barriers/railings, utilities, sign structures, lighting systems shall be included as well. All dead loads on the abutments shall be distributed equally to all piles.

3.10.2.2 Live Loads. The total Live Load on the abutment shall be determined assuming the largest number of traffic lanes that may be allowed by the total bridge width. For the design of the abutments and the piles, live loads shall be equally distributed to all girders in the cross section. No multiple presence factors shall be applied. Due to the fact that the superstructure is rigidly connected to the substructure as well as that fact that the crushed stone surrounding the piles is intentionally placed loose, the entire live load would be transferred from the superstructure to the substructure (including piles) without any loss and thus, the dynamic load allowance shall be used in the design of both the abutments and the piles.

For bridges with sidewalks, the following two cases are to be investigated and the most conservative shall be used.

1. Pedestrian load is ignored. The number of traffic lanes is calculated based on the total out-to-out width of the bridge, including the width of sidewalk(s) as if it was/were a part of the travelled way.

2. The number of traffic lanes is calculated based on the actual curb-to-curb width. Pedestrian load is applied to the abutment.

Centrifugal force shall be considered in the design of integral abutments of a curved bridge. It shall be calculated and applied as specified in Article 3.6.3 of the *AASHTO LRFD Bridge Design Specifications.*

Braking forces shall not be considered in the design of integral abutments due to the fact that they are resisted by the soil forces acting on the rear face of the abutments.

3.10.2.3 Wind Loads. Transverse wind acting on the superstructure and on live load shall be considered in the design. The direction of the transverse wind force shall be taken perpendicular to the longitudinal axis of the bridge.

Wind load on the structure shall be calculated using the total superstructure thickness including the bridge barrier and shall be distributed to all piles equally.

Wind on live load shall be assumed to act at a distance of 6 feet above the bridge deck. Statics shall be used to determine the effect of this load on the piles by applying a moment about the longitudinal axis of the bridge at the base of the integral abutment cap. This approach shall be used to determine the increase and decrease in loading to the piles.

3.10.2.4 Thermal Movements. The thermal movements, δ_T, shall be calculated in accordance with Subsection 3.1.8 above. For simple spans with constant width and with both superstructure and substructure symmetric in the bridge elevation, the thermal movements at each integral abutment shall be taken as half the change in bridge total length due to uniform temperature change.

3.10.2.5 Secondary Loads. The creep and shrinkage movement should be addressed mostly in designs of cast-in-place or prestressed concrete superstructures. Except for the effect of creep and shrinkage on the vertical reactions of simple prestressed spans made continuous for live loads, abutment loads caused by creep, shrinkage, thermal gradient and differential settlements need only be considered for bridges longer than those specified in Subsection 3.10.11 below, for the Simplified Design Method.

3.10.2.6 Load Factors and Load Combinations. Load Factors and Load Combinations for integral abutment bridges shall be as per Article 3.4, Tables 3.4.1-1 and 3.4.1-2 of the *AASHTO LRFD Bridge Design Specifications*. The following should also apply:

- Passive earth pressure shall be as per Subsection 3.10.8 below;
- Thermal movement is a major source of loads on the abutment and abutment piles. Both the passive earth pressure on the abutment and the stresses in steel piles due to thermal movements are not reduced by the plastic flow of the concrete expected due to the seasonal nature of the thermal movements. Therefore, no reduction in the load factor for uniform temperature is allowed and a load factor of 1.0 is used all the time.
- Seismic loads need not be considered for the design of integral abutment piles as the abutments engage the approach back fill to resist seismic displacements.

3.10.3 Superstructure Types

Only Steel I-beams (rolled beams and plate girders), Prestressed Concrete Spread Deck and Box Beams, NEBT beams, NEXT beams and concrete slabs shall be used with integral abutment bridges.

3.10.4 Approach Slabs

Approach slabs shall be used for all integral abutment bridges. The approach slab shall be detailed to remain stationary by constructing a key away from the abutment and shall be detailed to allow sliding at the end supported by the abutment.

3.10.5 Abutment Backfill and Drainage

The area behind the abutments shall be backfilled with MassDOT's Gravel Borrow for Bridge Foundations and a drainage system shall be provided as shown in Chapter 12 of Part II of this Manual.

3.10.6 Construction of Integral Abutments

Integral abutments shall be constructed as shown in Chapter 12 of Part II and Chapter 2 of Part III of this Bridge Manual.

Construction Loads need to be considered in the pile cap design, if construction equipment is

allowed on the bridge before pouring the abutment diaphragm. In such cases, the Load Factors for Construction Loads shall be taken as per Article 3.4.2 of the *AASHTO LRFD Bridge Design Specifications*.

3.10.7 Superstructure Design Methodology

The connection between the beams and the abutment shall be assumed to be simply supported for superstructure design and analysis. It is recognized that, in some cases, it may be desirable to take advantage of the frame action in the superstructure design by assuming some degree of fixity. This, however, requires careful engineering judgment. Due to the uncertainty in the degree of fixity, frame action shall not be used to reduce design moments in the beams.

3.10.8 Pile Cap and Abutment Diaphragm Design

The superstructure is assumed to transfer moment, and vertical and horizontal forces due to all applicable loads, at the time when the rigid connection with the abutment is achieved. The effects of skew, curvature, thermal expansion of the superstructure, reveal, and grade are considered.

The design provisions below are conservative because the pile cap and the abutment diaphragm are very rigid members, therefore all loads shall be uniformly distributed across the abutment.

For the integral abutments constructed in two stages as specified above, the abutment shall be designed for the following two cases:

1. The pile cap is designed to resist all vertical loads including live load. It is assumed to act as a continuous beam supported by piles. The analysis can be simplified by assuming the pile cap acting as a simple span between piles and then taking 80% of simple span moments to account for continuity. Shears may be taken equal to simple span shears.

2. The entire abutment wall (the combined height of the pile cap and the abutment diaphragm) is designed to resist the earth pressure due to the backfill material, assuming the wall to act as a horizontal continuous beam supported on the girders, i.e., with spans equal to the girder spacing along the skew (if any).

The abutments should be kept as short as possible to reduce the magnitude of soil pressure developed. A minimum of 3'-0" for inspection access shall be provided. A minimum fill cover over the bottom of the abutment of 3'-0" is desirable. It is recommended to have abutments of equal height due to the fact that a difference in abutment heights causes more movements to take place at the shorter abutment. Abutments of unequal height shall be designed by balancing the earth pressure consistent with the magnitude of the displacement at each abutment.

The magnitude of lateral earth pressure developed by the backfill is dependent on the relative wall displacement, δ_T/H, and may be considered to develop between full passive and at-rest earth pressure. The backfill force shall be determined based on the movement-dependent coefficient of earth pressure (K). Results from full scale wall tests performed by UMASS[1] show reasonable agreement between the predicted average passive earth pressure response of MassDOT's standard compacted gravel borrow and the curves of K versus δ_T/H for dense sand found in design manuals DM-7[2] and NCHRP[3]. For the design of integral abutments, the coefficient of horizontal earth pressure when

using compacted gravel borrow backfill shall be estimated using the equation:

$$K = 0.43 + 5.7[1 - e^{-190(\delta_T/H)}]$$

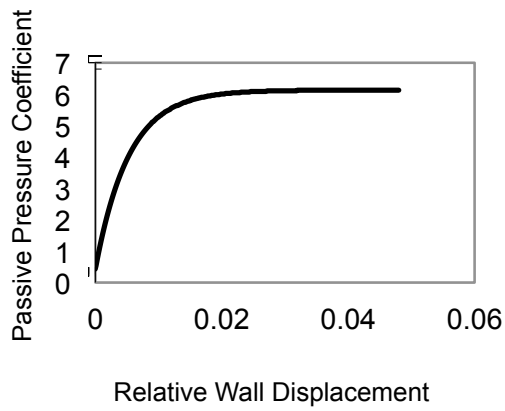

Figure 3.10.8-1: Plot of Passive Pressure Coefficient, K, vs. Relative Wall Displacement, δ_T/H.

The simplified approach may be used to calculate moments and shears in the abutment walls, assuming the abutment wall acting as a simple span between piles and then taking 80% of simple span moments to account for continuity. Shears may be taken equal to simple span shears. Due to the relatively large dimensions of the abutment walls, minimum reinforcement is usually sufficient to satisfy the strength requirements.

The longitudinal reinforcement of the pile cap shown in Chapter 12 of Part II of this Bridge Manual represents an upper–bound for the required reinforcement assuming the girders are located at the positions that produce maximum effects on the pile cap and assuming a conservative value of other dead loads on the abutment wall.

Stirrups intended to resist horizontal shear forces acting on the pile cap due to soil passive pressure shall be provided as shown in Part II of this Bridge Manual.

L-shaped connection reinforcing bars indicated in the standard drawings of Chapter 12 of Part II and Chapter 2 of Part III of this Bridge Manual shall be provided to transfer the maximum expected connection moment between the abutment and the superstructure. These bars shall be #6 @ 9” for girders up to 8 feet deep. For deeper girders they shall be designed. The vertical leg of the connection bars shall be placed as close as practical to the back face of the abutment. The horizontal leg shall be extended into the deck beyond the inside face of the abutment diaphragm at the elevation of the deck top longitudinal reinforcement for a length equal to 10% of the span plus the development length, for simple span bridges. For continuous span bridges the bars shall be extended to 10% of the end span plus the development length.

Refer to Chapter 12 of Part II and Chapter 2 of Part III of this Manual for more information on the integral abutment reinforcement.

3.10.9 Integral Wingwall Design

Only U - shaped (parallel to the longitudinal axis of the bridge) integral wingwalls shall be used between the abutments and the Highway Guardrail Transitions. The length of the integral wingwalls shall be as required by site and bridge geometry, with a minimum and maximum length of 2 feet and 10 feet, respectively. When a longer wingwall is required a combination of integral and independent wingwalls shall be used.

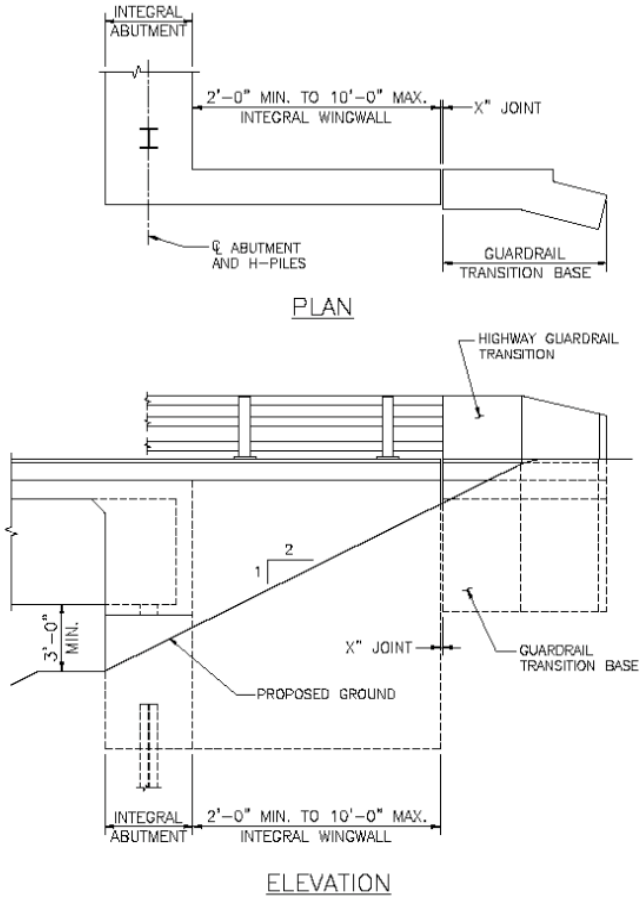

Figure 3.10.9-1: Integral Wingwall Geometry

A parametric study [19] was performed to determine the required primary integral wingwall reinforcement (parallel to the longitudinal axis of the bridge). It was designed based on the moment taken as a sum of the factored active earth pressure moment and the moment resulted from the vehicular collision force applied at the top of the barrier/railing. This load case is considered under Extreme Event II Load Combination with the load factors of 1.5 and 1.0 for the active earth pressure and the vehicular collision, respectively. The analyses were performed for all types of the barrier/railing used by MassDOT as per Part II, Chapter 9 of this Bridge Manual.

Based on the above parametric study, the minimum required primary integral wingwall reinforcement (longitudinal) was determined and shall be as per design table of Chapter 12 of Part II of this Bridge Manual.

The secondary integral wingwall reinforcement (vertical) was determined based upon the shrinkage requirements of Article 5.10.8 of the *AASHTO LRFD Bridge Design Specifications* and is provided in the design table of Chapter 12 of Part II of this Bridge Manual, as well.

3.10.10 Piles

3.10.10.1 General. The abutment shall be supported on a single row of vertical H-piles with the webs oriented parallel to the centerline of the abutment regardless of the skew. The permissible total length of integral abutment bridges is sensitive to the relative slenderness of the pile section. There are only two H-pile sections that satisfy the provisions of *AASHTO LRFD Bridge Design Specifications* Article 6.12.2.2.1 and are capable of developing a fully plastic stress distribution and may be used where plastic hinge formation is expected. These sections are HP10X57 and HP12X84 and they shall be used exclusively in integral abutment construction. Only Grade 50 steel (F_y=50 ksi) shall be used for the above H-pile sections.

3.10.10.2 The pile tip elevation shall be established as per requirements of Subsection 3.10.11 below. When scour is anticipated, the minimum pile length, to meet the structural and geotechnical resistance as required by Subsection 3.2.9, shall be provided beyond the depth of computed total scour.

3.10.10.3 The minimum and maximum distances between the pile flange and the end of the abutment, measured along the skew, shall be 18” and 3'-0", respectively (these limits shall not apply to the staged construction). The piles shall be embedded 2 feet into the pile cap. Maximum pile spacing for integral abutment piles shall be 10 feet. The minimum pile spacing should not be less than 3’-6”. A minimum of one (1) pile per beam line at each abutment shall be used.

3.10.10.4 A trench with a depth of 3’ and a minimum width of 2’-6” shall be constructed directly below the bottom of the pile cap. After the piles are driven, the trench shall be filled with crushed stone to reduce the resistance to the lateral pile movement due to the thermal forces resulting from the temperature changes.

3.10.11 Pile Design

3.10.11.1 General. MassDOT has two methods for Designers to use in designing Integral Abutment piles. Both employ the same pile design methodology, however in the Simplified Method, the thermal movement and skew effects have been factored into the Maximum Factored Axial Compressive Resistance per pile that is provided to Designers to use, while for the Finite Element Analysis Method, the Designer must perform the pile design based on the load effects and displacements obtained from a finite element model of the bridge structure.

I. <u>The Simplified Method</u>. This method allows designers to determine an adequate H-pile section (HP10X57 or HP12X84) by calculating only factored gravity loads (dead and live) for the anticipated number of the abutment piles for a given bridge. The Simplified Method as described below shall be used only if ***all*** of the following boundary conditions are satisfied:

   1. Total bridge lengths shall be limited to 140 feet for steel bridges and 200 feet for concrete bridges. These maximum span lengths restrict the lateral pile’s head displacement to approximately ½” of the one-way movement.

   2. Skew angles shall be limited to 30°.

3. The structure shall be a straight bridge or a curved bridge with straight beams that parallel with each other.

4. Horizontal curvature shall be limited to a 5° subtended central angle.

5. The difference in the profile grade elevation at each of the abutments shall not exceed 5% of the bridge length.

6. Abutment heights, measured from the deck surface to the bottom of the cap, shall not exceed 15 feet.

7. The bridge shall set upon parallel abutments and piers.

8. The bridge shall have abutments with parallel wingwalls (U-wingwalls).

9. The top of bedrock, as per Geotechnical Report, shall be located lower than the established pile tip elevation.

10. The abutments of the bridge are not scour susceptible.

II. The Finite Element Analysis Method. This method shall be used when one or more of the specified above boundary conditions are not met, as well as for integral bridges with unique or unusual geometry. It requires the modeling of the entire bridge structure using an "equivalent length" of unsupported fixed end pile based on the top of the pile deflection required for thermal movement, as described below.

3.10.11.2 Pile Tip Elevation. In order to obtain the intended pile behavior, the piles must be installed to the point of fixity (L_f) or deeper. Therefore, the final pile tip elevation to be shown on the Construction Drawings shall be the longer of the following calculated pile lengths:

1. The required pile length, based on the Factored Geotechnical Pile Resistance.

2. The required pile length, based on the theoretical depth to pile fixity, L_f, plus five (5) feet. The theoretical depth to pile fixity is defined as the depth along the pile to the second point of zero lateral deflection, in relation with the calculated thermal movement of the bridge superstructure as shown in Figure 3.10.11-1 below. Furthermore, the pile must be installed to a depth of five (5) feet below the point of the theoretical pile fixity, to account for any uncertainly in the actual L_f.

At locations where bedrock is situated below the estimated pile tip elevation, but is in close proximity, the piles may be extended to the top of rock. In such cases the number and size of the piles per abutment need only be based on the Design Factored Structural Resistance of the piles. The requirements of the Subsection 3.10.10 shall also be followed.

At locations where the bedrock elevation is less than five (5) feet below the elevation of the theoretical point of pile fixity, the piles need only be driven to bedrock. At locations where the bedrock is located at an elevation that is higher than elevation of the theoretical point of pile fixity, the site is considered unsuitable for pile supported integral abutments. At locations were the bedrock

profile is uncertain, i.e. the borings produce significant discrepancy in the top of rock elevations, geophysical subsurface testing methods may be used to establish the profile with the improved reliability to determine if the site is suitable for pile supported integral abutments or not.

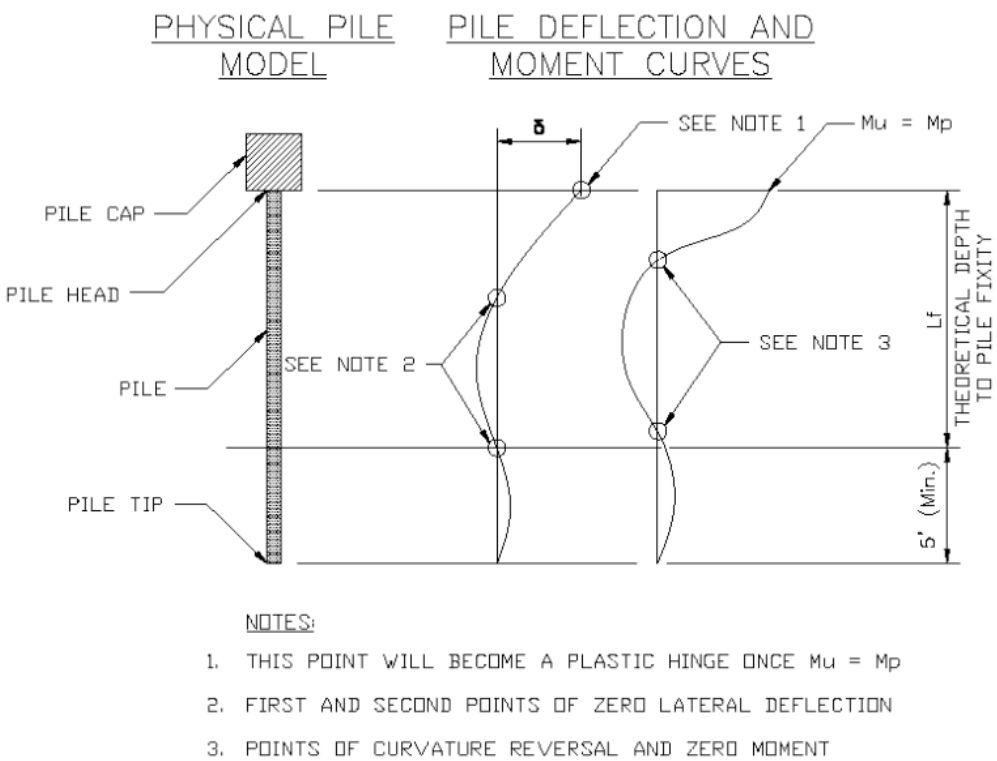

Figure 3.10.11-1: Integral Abutment's Pile Design Model when $M_u = M_p$

3.10.11.3 General Pile Design Methodology. Both design methods are based on the methodology which incorporates the provisions contained in the *AASHTO LRFD Bridge Design Specifications* Subsections 6.5, 6.9, 6.10, and 6.15 and the following:

Integral abutment piles are considered to be fully braced against lateral torsional buckling and gross Euler buckling.

The Factored Geotechnical Pile Resistance and the Factored Axial Pile Resistance shall be computed and evaluated based on the following three (3) controlling cases:

1. Geotechnical Factored Resistance of the pile to transfer load to the ground.

2. Geotechnical Factored Resistance of the ground to support the load.

3. Factored Axial Resistance of the pile according to the procedures outlined in Article 6.15 of the AASHTO LRFD Bridge Design Specifications.

Six different soil types, which were considered for evaluation, as well as their properties, are specified in the following table:

	Soil Type	Unit Weight γ {pcf}	Friction Angle ϕ {degrees}	Modulus k {pci}	Cohesion c {psf}	Strain ε_{50}
1	Dry Loose Sand	122	30	25	-	-
2	Wet Loose Sand	60	30	20	-	-
3	Dry Dense Sand	138	40	225	-	-
4	Wet Dense Sand	76	40	125	-	-
5	Wet Stiff Clay	70	-	500	2600	0.005
6	Wet Soft Clay	70	-	100	575	0.02

Table 3.10.11-1: Soil Properties

In developing the pile capacities and depth to theoretical point of fixity for the Simplified Method, the L-Pile computer program was used to induce a displacement of ½" along the longitudinal axis of the bridge at the pile head for both HP10X57 and HP12X84 pile sections. The resulting moments from the lateral translation at the pile head were established. Subsequently, the Maximum Factored Axial Resistance of a pile sections was calculated as per Article 6.9.2.2 of the *AASHTO LRFD Bridge Design Specifications* by solving the interaction Equation 6.9.2.2-2 for the Axial Compressive Load, P_u, with the following modification: due to the fact that compact sections are capable of developing a fully plastic stress distribution and have an inelastic rotational capacity of 3 before the onset of flange local buckling, the final design procedure for compact pile sections incorporates an inelastic rotational capacity factor $\theta_i = 1.75$ to account for the pile's ability to undergo inelastic rotation (for weak axis bending only) and the associated increase in pile head translation. The modified interaction equation used in the pile analysis is:

$$\frac{P_u}{P_r} + \frac{8.0}{9.0}\left[\frac{M_{uy}}{\theta_i M_{ry}} + \frac{M_{ux}}{M_{rx}}\right] \le 1.0$$

Where:

P_u = Factored axial compressive load;
P_r = Factored axial compressive resistance of the respective pile section;

$P_r = \phi_c P_n = \phi_c F_y A_g$ = axial compressive resistance of a compact pile section that is fully braced against sidesway and buckling, where:

$\phi_c = 0.70$ = Resistance factor for compression as per Article 6.5.4.2 of the *AASHTO LRFD Bridge Design Specification*s for H-Piles with combined axial and flexural resistance.

M_{uy} ; M_{ux} = Factored flexural moment about the pile's respective axis determined from analysis;
M_{ry} ; M_{rx} = Factored flexural resistance about the pile's respective axis;

For compact sections these values shall be taken as:

$M_{ry} = Z_y F_y$ and $M_{rx} = Z_x F_y$

Where:

Z_y ; Z_x - Plastic section modulus for respective axis;
$Z \leq 1.5$ S (AISC[7], Section F1.1);
S = Section modulus for the pile's respective axis;

θ_I = Coefficient of inelastic rotational capacity (see above).

In accordance with Paragraph 3.2.9.2 of this Bridge Manual, for the design of integral abutment piles at the design scour depth, or in the case where the piles penetrate through extremely soft material such as peat, the pile unbraced length must be considered as part of the design. In these cases M_{rx}, M_{ry} and P_r must be determined following the requirements of Article 6.9.2.2 of the *AASHTO LRFD Bridge Design Specifications*, while considering an unbraced length > 0 and using interaction equation contained herein. Pile unbraced length may be taken as the exposed depth of pile or the depth of extremely soft material.

In accordance with Paragraph 3.2.9.3 of this Bridge Manual, for the design of integral abutment piles at the check scour depth, piles shall be checked for axial load only following all requirements in *AASHTO LRFD Bridge Design Specifications* Article 6.9.2.2.

In skewed bridges the deflection due to thermal movement was resolved into components and the piles were analyzed for bi-axial bending. Skew effects are included in the values provided in the Design Tables below and the Designer may interpolate between them for a given skew, if needed. It should be noted that since the load factor for thermal loads is 1.0, the results from the L-Pile analysis were used as factored loads.

The P-Δ effects of the axial load were investigated using the L-Pile program and proven to have an insignificant effect on the total bending in the pile section for the deflections due to one-way thermal movements for up to ½". As a result, the P-Δ effects were ignored in the development of the Simplified Method. For the Finite Element Analysis Method with one-way thermal movements larger than ½" the P-Δ moments (Axial Load x Deflection) shall be included.

In an effort to more accurately simulate field conditions, an analytical study was performed for each type of soil using the L-Pile program with 5 feet of overburden located above the top of the pile head. This minimum depth of overburden was included because in all instances the top of the pile is at least 5 feet below the surface of the roadway. The layer below the overburden was a 3-foot thick layer of crushed stone, followed by the soil types described in Table 3.10.11-1. The results of the analysis showed that the effects of the overburden did not have a significant effect on the behavior of the pile since the 3' crushed stone filled trench allows the pile head to translate relatively freely for these anticipated thermal movements. Therefore, overburden need not be considered and the tabulated values in Paragraph 3.10.11.4 do not include overburden.

The L-Pile results were used to determine the theoretical depth to pile fixity for each soil type specified above for the enforced lateral displacement as well as determine the bending moment at the top of the pile for fixed head conditions.

3.10.11.4 The Simplified Design Method Procedure. Assuming anticipated number of piles (usually one pile per beam line) at each abutment, the Design Factored Axial Compressive Load per

pile shall be computed based on gravity loads (dead and live) only. In order to establish an adequate pile section the computed load shall be checked against the Maximum Factored Axial Compressive Load per pile, P_u, shown in the Design Tables 3.10.11-2 and 3.10.11-3 below. The Design Tables provide the Designer with the theoretical depth to pile fixity as well, which shall be used to establish final pile tip elevation as described in Subsection 3.10.11.2 above.

Soil Type		Skew				L_f (feet)
		0°	10°	20°	30°	
		P_u (kips)	P_u (kips)	P_u (kips)	P_u (kips)	
1	Dry Loose Sand	420	396	377	364	22
2	Wet Loose Sand	429	406	389	377	22
3	Dry Dense Sand	367	328	302	286	16
4	Wet Dense Sand	378	341	317	301	17
5	Wet Stiff Clay	380	332	305	278	14
6	Wet Soft Clay	471	445	429	419	22

Table 3.10.11-2: Maximum Factored Axial Load per pile and Theoretical Depth to Pile Fixity for HP 10X57 Pile Section

Soil Type		Skew				L_f (feet)
		0°	10°	20°	30°	
		P_u (kips)	P_u (kips)	P_u (kips)	P_u (kips)	
1	Dry Loose Sand	641	610	587	571	25
2	Wet Loose Sand	654	626	604	590	26
3	Dry Dense Sand	561	507	473	453	18
4	Wet Dense Sand	580	530	498	479	19
5	Wet Stiff Clay	583	518	484	464	16
6	Wet Soft Clay	713	679	661	649	26

Table 3.10.11-3: Maximum Factored Axial Load per pile and Theoretical Depth to Pile Fixity for HP 12X84 Pile Section

3.10.11.5 The Finite Element Design Method Procedure. The initial choice of pile section shall be based on the Design Factored Axial loads as per procedure specified above for the Simplified Design Method.

The purpose of modeling the structure, as outlined below is to determine:

- Moments in the piles and in the abutment due to thermal and skew and scour effects
- Distribution of seismic loads on multi-span structures

A bridge shall be modeled as 3-D space frame that includes, as a minimum, a “stick” model of the superstructure, abutments, wingwalls, piers (if any), piles, soils springs, and shall be representative of the geometry, including skew (refer to Figure 3.10.11-2 below). The frame elements representing the superstructure and any piers shall be modeled with transformed section properties located at the

respective centers of gravity. The frame elements representing the abutments and rigid connectors shall be modeled with "infinite stiffness". The piles shall be modeled with their respective properties and rotated to align with the abutment skew. Soil springs shall be modeled and located as discussed below.

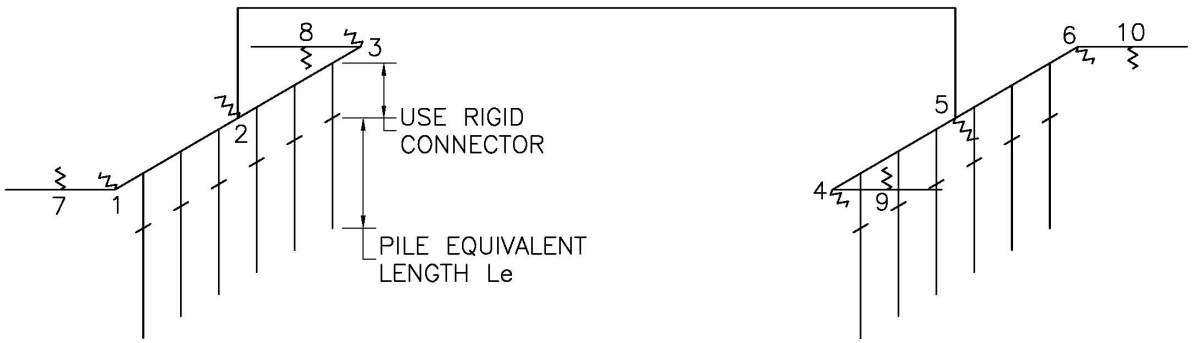

Figure 3.10.11-2: "Stick" Model Geometry

The soil behind the abutments shall be modeled with at least three (3) horizontal non-linear springs that are oriented perpendicular to the wall face with each of the springs located at 1/3 the height of the abutment wall from the base, see nodes 1 through 6 in the diagram above.. In addition the nodes 2 and 5 should be located at mid length of the walls and nodes 1, 3, 4, and 6 should be located at the ends of the walls. The soil spring stiffness behind each abutment shall be distributed based on the tributary area for the middle portion equal to 50% at nodes 2 and 5 and end quarters equal to 25% at nodes 1, 3, 4, and 6. The non-linear soil spring stiffness shall be based on K values determined in accordance with Subsection 3.10.8 above for assumed incremental displacements. The soil springs shall not carry tension forces. The same K values shall be used for both static and dynamic loads. Similarly, the soil behind the integral wingwalls shall be modeled as a horizontal soil spring located at the half point from the wingwall end and at 1/3 the height from the wall base, nodes 7, 8, 9 and 10 in the diagram above, with stiffness calculated as stated above. The choice of the vertical location of the pressure resultant for placing the soil springs is based on a classic triangular soil pressure distribution. To capture the full height of the abutment wall as it relates to the piles, rigid connectors should be used to connect the pile tops at the base of the wall to the horizontal frame member representing the abutment which is located at the abutment 1/3 point.

For additional information on modeling non-linear behavior refer to Article 4.5.3.2.1 of the *AASHTO LRFD Bridge Design Specifications.*

The length of pile from the base of the abutment to the point of fixity shall be the equivalent length, L_e, defined as the theoretical equivalent length of a free standing column with fixed/fixed support conditions translated through a pile head horizontal displacement δ_T. The equivalent length for each pile, L_e, used in the 3-D model shall be as outlined in Table 3.10.11-4 below.

	Soil Type	L_e (ft)	
		HP10x57	HP12x84
1	Dry Loose Sand	8.3	9.5
2	Wet Loose Sand	8.5	9.8
3	Dry Dense Sand	7.3	8.3
4	Wet Dense Sand	7.5	8.5
5	Wet Stiff Clay	7.5	8.5
6	Wet Soft Clay	10	11.5

Table 3.10.11-4: Equivalent Pile Length (L_e).

In order to obtain the pile behavior associated with the calculated equivalent lengths, the piles must be installed to a point of fixity or deeper. As defined in Paragraph 3.10.11.2, the theoretical depth to pile fixity is defined as the depth along the pile to the second point of zero lateral deflection. The required length of fixity, L_f , shown in Tables 3.10.11-2 and 3.10.11-3 was converted to the equivalent lengths, L_e summarized in Table 3.10.11-4 above. Equivalent length, L_e, is the length of a free- standing column with fixed/fixed support conditions translated through a pile head horizontal displacement δ_T. The pile deflection and moment diagrams associated with the above behavior are shown in Figure 3.3. The pile tip elevations shall be determined in accordance with Paragraph 3.10.11.2.

To calculate the Factored Axial Pile Resistance the analyses shall be performed for all applicable Load Combination Limit States as per Article 3.4, Tables 3.4.1-1 and 3.4.1-2 of the *AASHTO LRFD Bridge Design Specifications*.

If the analysis results indicate that the piles are inadequate, the Designer shall increase the pile size and/or add additional piles and re-analyze until an adequate pile size and/or spacing is determined.

3.10.12 References

1. Lutenegger, T. A. Thompson, Jr., C. Riccardi, “Passive Earth Pressures in Integral Abutment Bridges”, Report No. UMTC-97-16, University of Massachusetts, Transportation Center, Amherst, Massachusetts, 1998.

2. “Design Manual - Soil Mechanics, Foundations and Earth Structures,” NAVFAC DM-7, Department of the Navy, Naval Facilities Engineering Command, Alexandria, VA, 1971.

3. Barker, et. al., NCHRP Report 343, “Manuals for the Design of Bridge Foundations”, Transportation Research Board, Washington, D. C., 1991.

4. Ting, S. Faraji, “Streamlined Analysis and Design of Integral Abutment Bridges”, Report No. UMTC-97-13, University of Massachusetts, Transportation Center, Amherst, Massachusetts, 1998.

5. Fleming, W.G.K. et. al., “Piling Engineering”, Surrey Univ. Press, Halsted Press, New York, 1985.

6. Vesic, A.S., "NCHRP Synthesis of Highway Practice 42 Design of Pile Foundations", Transportation Research Board, Washington, D.C., 1977.

7. American Institute of Steel Construction, "Steel Construction Manual", 13th Edition, 2005.

8. Elgaaly, et. al., "Testing an Integral Steel Frame Bridge", Transportation Research Record 1371.

9. Bakht, "Analysis of Some Skew Bridges as Right Bridges", Journal of Structural Engineering, Vol. 114, No. 10, 1988.

10. Commonwealth of Massachusetts, Massachusetts Highway Department, Geotechnical Section Internal Report, "A Preliminary Report on the Geotechnical Aspects of Integral Abutment Bridges", 1998.

11. Portland Cement Association, "Notes on ACI 318-95 Building Code Requirements for Structural Concrete with Design Applications", 6th Edition, 1996.

13. Bonczar, Christine H., Civjan, Scott A., Brena, Sergio F., DeJong, Jason, "Behavior of Integral Abutment Bridges: Field Data and Computer Modeling", Final Report to Massachusetts Highway Department UMTC-05-04, University of Massachusetts Transportation Center, Amherst, Massachusetts, 2005.

14. Conboy, D. W. and Stoothoff, E. J., "Integral Abutment Design and Construction: The New England Experience", Integral Abutment and Jointless Bridges 2005 Conference Proceedings, FHWA, Pp. 50-60, 2005.

15. Precast/Prestressed Concrete Institute, "PCI Design Handbook", 7th Edition, 2010.

16. American Iron and Steel Institute and the Tennessee Department of Transportation, "Highway Structures Design Handbook, Volume II, Chapter 5, Integral Abutments for Steel Bridges", 1996.

17. VTrans Structures Section, "Integral Abutment Bridge Design Guidelines", 2nd Edition, 2008.

18. Pennsylvania Department of Transportation, Design Manual, Part 4, Volume 2, Appendix G - Integral Abutments, June 2008.

19. Modjeski and Masters, Inc., "Guidance on the Design for Vehicular Collision with Wingwalls", 2009.

3.11 REHABILITATION OF STRUCTURES

3.11.1 General Requirements

Every bridge rehabilitation project shall ensure a bridge structure that meets current code and load capacity provisions. Where feasible, structures shall be made jointless.

3.11.2 Options for Increasing Carrying Capacity

3.11.2.1 General. The following are traditional options for increasing the resistance of existing main load carrying members. They can be used independently or in combination to achieve the desired effect. Not every structure can be upgraded using these options and therefore, sound engineering judgment should be employed when evaluating them.

1. Where the existing beams are of non-composite construction, redesigning the beams for composite action and providing for the addition of shear connectors may be sufficient to increase the carrying capacity.

2. Using a full depth HPC deck with a ¾" thick integral wearing surface may be used in lieu of a regular deck with a bituminous concrete wearing surface to reduce the added dead load. Thin HPC overlays shall not be considered due to the potential for constructability problems.

3. Using lightweight concrete for the deck instead of regular weight concrete. When using lightweight concrete, the Designer must take into account the reduced Modulus of Elasticity in the calculation of composite section properties as well as the increase in the development and lap lengths for reinforcing bars, as specified in the *AASHTO LRFD Bridge Design Specifications*.

4. On rolled steel beam sections, adding cover plates. On bridges with existing cover plates, consideration can be given to adding additional cover plates on the top of the bottom flange. This is usually accomplished by adding two small plates to the top of the bottom flange, placed symmetrically either side of the web plate. Addition of any cover plates to an existing structure changes the stress distribution in the beam which must be accounted for in design, e.g. the bottom flange carries dead load stresses while the added cover plate is unstressed.

5. Where existing members have cover plates on the bottom flange, it is usually not economically feasible to remove them, especially if the bridge is over a road that has a high ADT.

6. Construct continuity retrofit of simply supported main members over the pier(s) in order to reduce live load stresses in positive moment region(s).

3.11.2.2 The standard 1½" haunch shall not be used in calculating composite section properties. However, where an excessive haunch depth occurs due to changes in bridge cross slope or changes in vertical profile, the haunch depth in excess of the standard haunch can be utilized in calculating composite section properties. For example, if the profile change results in a 6" haunch, the excess 4½" may be used in calculating section properties.

3.11.3 Fatigue Retrofits

3.11.3.1 All fatigue-susceptible details shall be fully investigated in bridge rehabilitation projects. Of particular concern are the ends of cover plates where a fatigue category E or E′ exists. In most cases, older cover plated beams will not meet current fatigue requirements for allowable stress ranges.

3.11.3.2 Reference is made to the *AASHTO LRFD Bridge Design Specifications* and the *AASHTO Manual for Bridge Evaluation*, Chapter 7, *Fatigue Evaluation of Steel Bridges*, for evaluating the remaining fatigue life of existing steel members.

3.11.3.3 For existing rolled beams with partial length cover plates, if the remaining fatigue life is inadequate or if cracks are found at the cover plate ends during a visual inspection, the beams will be retrofitted by installing splice plates on the bottom flange which will span over the cover plate end. These splices will be designed for the maximum force in the cover plate based on the cross sectional area and the stress in the cover plate under the Service and Strength Limit States. The splices will be designed as bolted slip-critical connections.

Installing bolts through the existing cover plate termination is not acceptable as a retrofit because it does not span over the cover plate end and does not relieve the stress riser associated with the transverse weld. Furthermore, if a crack at the end of the cover plate that was invisible at the time of the inspection were to grow and propagate through the beam flange, the bolts would not keep the beam flange from separating in the way a splice would.

3.12 ANCILLARY STRUCTURES

3.12.1 Pedestrian Bridges

Bridges whose primary function is to carry pedestrians, bicyclists, equestrian riders, and light maintenance vehicles shall be designed in accordance with the *AASHTO LRFD Guide Specifications for Design of Pedestrian Bridges*. Pedestrian bridges shall be designed to comply with the Americans with Disabilities Act (ADA) law.

3.12.2 Temporary Bridges

Pre-Engineered Temporary Panelized Bridges are to be used wherever feasible to maintain traffic flow during bridge reconstruction projects. The design of Pre-Engineered Temporary Panelized Bridge superstructures shall be performed by the supplier and shall be reviewed and approved by the Designer. Where the use of Pre-Engineered Temporary Panelized Bridge superstructures is not feasible, all elements of the temporary bridge structure shall be designed by the Designer. The design of all temporary bridge substructures that are to be used by the public during a bridge project shall be the responsibility of the Designer. Temporary bridge substructures that support Pre-Engineered Temporary Panelized Bridges shall be designed for assumed loads from the superstructure. The temporary bridge substructures shall be located and detailed on the bridge Construction Drawings. The assumed vertical and horizontal geometry of the Pre-Engineered Temporary Panelized Bridge and the assumed design loads for the substructure shall be specified on the bridge Construction Drawings. All temporary bridge structures shall be designed as if the structure was intended to be a permanent installation. Provisions for seismic design may be waived with the approval of the State Bridge Engineer.

3.12.3 Sign Attachments to Bridges and Walls

3.12.3.1 All sign attachments, their connections and their appurtenances shall be designed in accordance with the latest version, including current interims, of the AASHTO *Standard Specifications for Structural Supports for Highway Signs, Luminaries, and Traffic Signals*. The effect of loads from the sign structure on the bridge structure in conjunction with the bridge dead and live loads shall be considered during design.

3.12.3.2 In the design of sign supports, the wind velocity to be used shall be in accordance with the basic wind speed figure contained in the latest version, including current interims, of the AASHTO *Standard Specifications for Structural Supports for Highway Signs, Luminaries, and Traffic Signals.*

3.12.3.3 When considering whether to attach a sign to an existing bridge structure, the following recommendations shall be observed:

1. Avoid attaching large signs to existing bridges (signs whose height is greater than 1.5 times the depth of the bridge beam plus coping height.
2. Avoid attaching signs to bridges where the angle between the sign face and the bridge fascia would exceed 30°.
3. Do not attach changeable message signs to existing bridge structures under any circumstances. These shall always be mounted on independent full span structures.
4. Even if it still seems more efficient to mount a sign on an existing bridge, the bridge must still be checked to verify that the beams can carry all of the sign loads (dead load, eccentric torsional load, out of plane bending, etc.) without global or local overstress. If members are overstressed then a retrofit design must be provided. Also, the condition of both the beam and the coping concrete must be investigated to verify that it is competent to be attached to.
5. Signs shall not be attached to bridges with prestressed concrete beams that would require field drilling for the sign attachments. Field drilling into prestressed beams is prohibited since the prestressing strands are embedded in the beams and careless drilling can sever the strands and reduce the load carrying capacity of the beam. Concrete inserts, if used, shall be cast into the beam during fabrication.
6. Expansion bolts embedded into existing copings shall have a minimum diameter of ¾”.

3.12.3.4 Sign supports shall be fabricated from steel conforming to AASHTO M 270 Grade 36 and shall be galvanized in accordance with AASHTO M 111. All steel hardware shall be galvanized in accordance with AASHTO M 232.

3.12.3.5 The minimum size of angles to be used shall be L3x3x5/16. The minimum size weld to be used shall be ¼”.

3.12.3.6 The distance between sign support panels shall be selected so that the maximum positive and maximum negative moments in the panels shall be approximately equal. The bottom of the sign panel shall be a minimum of 6” above the bottom of the stringer.

3.13 BRIDGE INSPECTION

3.13.1 Requirements for Bridge Inspection Access

3.13.1.1 The main purpose of a bridge inspection is to assure the safety of a bridge for the travelling

public by uncovering deficiencies that can affect its structural integrity. The results of a bridge inspection are used to initiate maintenance activities and/or a load rating. In order to comply with these requirements, all structural components of a bridge must be accessible for a hands-on inspection.

The standard MassDOT bridge, as detailed in Parts II and III of this Bridge Manual, allows inspectors to access all structural members through the use of ladders, bucket trucks or the Bridgemaster (Inspector 50) truck. However, this equipment does have limitations, outlined below, that may prevent full access in some locations. Also, non-standard bridges may require special considerations for inspection access and maintenance. In these cases, inspection access must be secured through the use of rigging, platforms, walkways, scaffolding, barges, and in some cases, special travelling gantries.

The Designer is obligated to properly plan for safe inspection access as part of the design process and to provide accommodation for inspection access equipment in the Construction Drawings. This will insure that the bridge will be thoroughly inspected in the future. Otherwise, bridge inspectors may be faced with an impossible task of trying to properly inspect an inaccessible structure.

3.13.1.2 Ladders. Typically, the maximum safe reach for a ladder is about 25 feet. In addition, ladders must be set on firm and level ground. If the topography of the ground under a bridge is sloping, unstable, too rough or if the bridge is directly over water, ladders probably cannot be used.

3.13.1.3 Bucket trucks. Bucket trucks can be used to access the underside of a bridge from below. The maximum safe vertical reach for a bucket truck is about 25 feet. In order to use a bucket truck, there must be a road directly under the bridge. If there is no road, a bucket truck cannot be used. Bucket trucks also cannot be used on sloping ground.

3.13.1.4 Bridgemaster (Inspector 50) Truck. The Bridgemaster is a versatile inspection truck that allows access to the underside of a bridge from the bridge deck. The vehicle has a maneuverable boom with a bucket that can reach over the side of the bridge and move around underneath. The Bridgemaster, however, does have the following limitations:

- The maximum width of sidewalk that the Bridgemaster can reach over from the curb is 6 feet.

- The Bridgemaster cannot be operated with one set of wheels on the sidewalk and the other on the roadway.

- If the sidewalk can support the truck's weight, the minimum width of sidewalk that the Bridgemaster requires for driving on is 10 feet and there must be a ramp type access to the sidewalk.

- The Bridgemaster bucket can be deployed over a railing or fence with a maximum height of 6 feet. If the fence extends beyond that up to a height of 8 feet, the Bridgemaster boom can only drive along the fence with the bucket already deployed. The bucket must be deployed before or after the start of the 8 foot high fence and there can be no obstructions, such as light poles, in the travel path of the boom. The Bridgemaster cannot reach over fences greater than 8 feet in height.

- The minimum safe vertical underclearance for operating the bucket is 10 feet.
- The maximum roadway cross slope that the Bridgemaster can operate on is 7%.
- The bucket and boom must stay a minimum of 10 feet away from power lines.
- Underneath, the maximum reach under favorable conditions is 50 feet, which is reduced to 25 feet on bridges with problematic access.
- The Bridgemaster bucket cannot reach up around deep girders to allow access to the deck or upper parts of the girder.
- The Bridgemaster cannot be used to access a bridge from below.

3.13.1.5 Bridges with confined spaces in which inspectors must work require special considerations in order to ensure that they will be safe for inspection personnel. OSHA's definition of a confined space is a space large enough and so configured that an employee can bodily enter and perform assigned work but has limited or restricted means for entry or exit and is not designed for continuous employee occupancy. Examples of such confined spaces on a bridge include the inside of steel box girders, hollow abutments, etc. The Designer is obligated to insure that there is sufficient room inside the confined space for a reasonably sized individual to move and turn around, that there is sufficient means of egress in an emergency or access by emergency personnel to rescue a stricken or incapacitated inspector.

3.13.1.6 In all cases of non-standard bridges or bridges with difficult access, the MassDOT Bridge Inspection Unit will review the bridge Construction Drawings and make recommendations for providing adequate and safe access for bridge inspection.

3.13.2 Fracture Critical Bridge Inspection Procedures

3.13.2.1 If a bridge is designed with fracture critical members, the Designer must prepare and submit a Fracture Critical Inspection Procedure as part of the design process in addition to the contract documents. This procedure will be used to properly inspect these structures in accordance with federal regulations, 23 CFR Part 650, Subpart C, §650.303 (e)(1).

3.13.2.2 The Fracture Critical Inspection Procedure shall be prepared on standard MassDOT forms as supplied by the Bridge Inspection Unit and shall consist of the following parts:

1. Index
2. Identification of Fracture Critical Members
   Identify all Fracture Critical members or Fracture Critical portions of members (such as tension zones of non-redundant plate girders or floorbeams) both by text and visually by using key Construction Drawings, diagrams and elevation views of members. This list will be used by the inspectors to identify and inspect all Fracture Critical members on the bridge. The required inspection frequency shall also be noted.
3. Identification of Fatigue Sensitive Details

Identify all Fatigue Sensitive details on the Fracture Critical members both by text and through the use of the standard Fatigue Sensitive category diagrams. This list will be used by inspectors to identify and inspect all Fatigue Sensitive details on the Fracture Critical members. The required inspection frequency shall also be noted.

4. Inspection Procedure for Inspection of Fracture Critical Members
   Outline the procedure the inspectors are to follow when inspecting Fracture Critical members. The required inspection frequency shall also be noted.

5. Inspection Procedure for Inspection of Fatigue Sensitive Details
   Outline the procedure the inspectors are to follow when inspecting Fatigue Sensitive details. The required inspection frequency shall also be noted.

6. Photographs
   Provide inventory photographs of the bridge structure and photographs of the typical Fracture Critical members and Fatigue Sensitive details for identification purposes.

The Federal Highway Administration Report No. FHWA-IP-86-26, "Inspection of Fracture Critical Bridge Members", dated September 1986, can be used as a reference and guide in preparing the inspection procedures of parts 3 and 4.

3.13.2.3 Since a Fracture Critical Inspection requires a very detailed, close visual "hands-on" inspection as a means of detecting cracks, the Designer shall make sure that all Fracture Critical members of the bridge can be accessed in accordance with Subsection 3.13.1.

3.13.3 Bridges Requiring Special Inspection and Maintenance Procedures

3.13.3.1 For all structures having unique or special features whose condition cannot be fully assessed through a standard visual inspection, or which require additional attention during an inspection to insure the safety of such bridges, the Designer will prepare a Special Inspection Procedure and will submit it along with the contract documents as a design deliverable. The Special Inspection Procedure will outline the procedures and methods required to properly inspect their condition and could include the use of Non-Destructive Testing equipment, periodic measurements at identified locations, and elevation surveys to properly assess the condition of such features.

Examples of such special and unique features are:

- Cable stayed bridges: cable stays, their anchorage to the bridge and the tower, structural tower inspection.
- Segmental concrete bridges: post tensioning cables and their anchorages, sagging of the structure due to strand relaxation or deterioration.
- Bridge with settling substructures: periodic survey of elevations at piers to monitor settlement rates.

Since it is impossible to outline every potential type of unique or special feature, it is incumbent upon the Designer to consider future inspection needs if the design calls for details which are not part of the MassDOT standards as detailed in Part II of this Bridge Manual. If the Designer is not certain if a Special Inspection Procedure is required, the MassDOT Bridge Inspection Unit should be

consulted as early as possible in the design process.

3.13.3.2 For those structures that have unique or special features which require special periodic maintenance to insure their satisfactory and safe operation, the Designer will prepare a Special Maintenance Procedure Manual and submit it along with the contract documents as a design deliverable. This manual will outline the maintenance work that is required, the frequency of the required maintenance, and any special procedures required to perform the work.