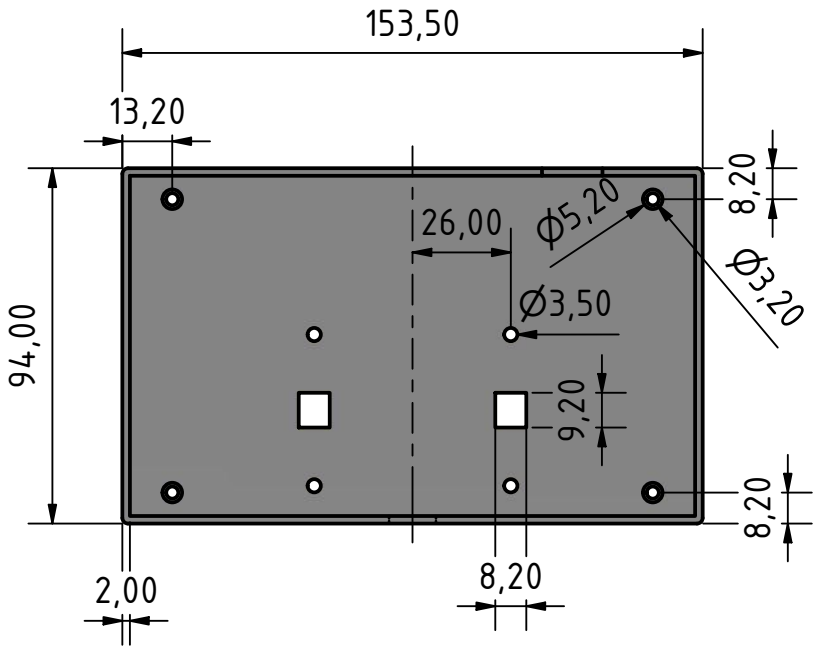

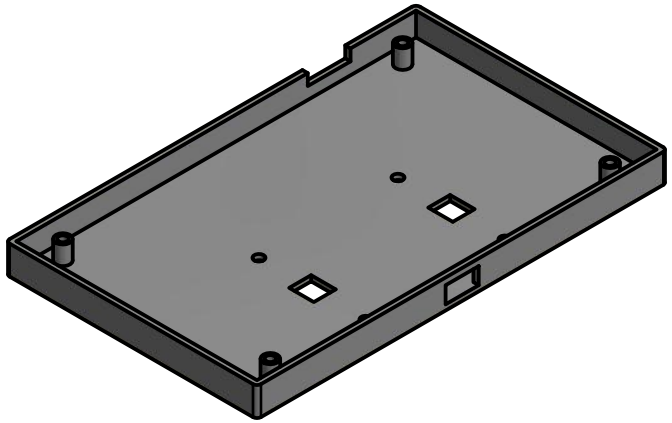

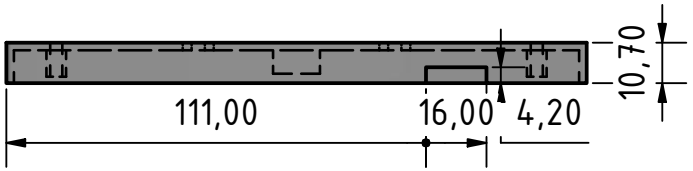

Lufkissenboot-Lenkung	
Mount_Nextion_Display_Main	1
	A4
02.03.2021	Stefan