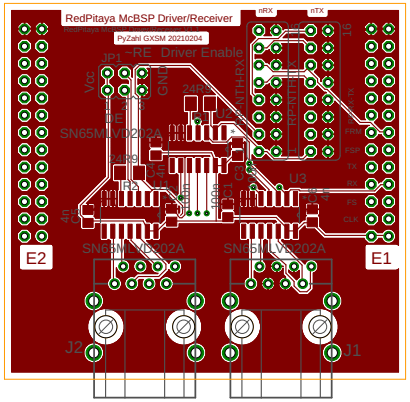

2/5/21 3:00 PM f=0.90 /home/pzahl/SVN/Gxsm-3.0/plug-ins/control/RedPitaya-Support/McBSP-Link-Hardware/MK3-RP-Link/rp-schield.brd