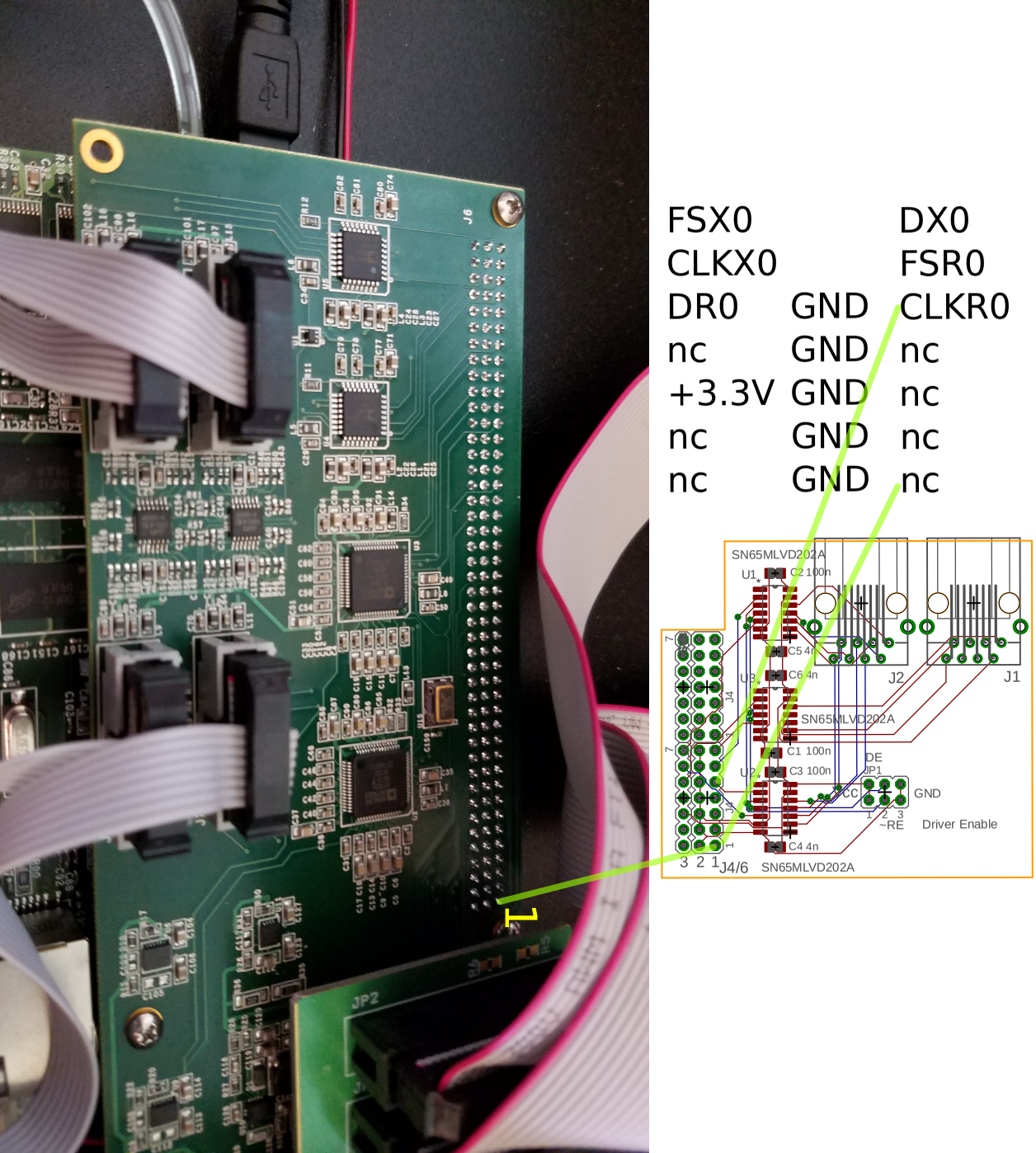
FSX0 DX0
CLKX0 FSR0
DR0 GND CLKR0
nc GND nc
+3.3V GND nc
nc GND nc
nc GND nc
SN65MLVD202A
U1
C2 100n
C5 4n
C6 4n
U3
J2
J1
J4
SN65MLVD202A
C1 100n
C3 100n
U2
DE
JP1
CC
GND
~RE
Driver Enable
C4 4n
3 2 1
J4/6
SN65MLVD202A