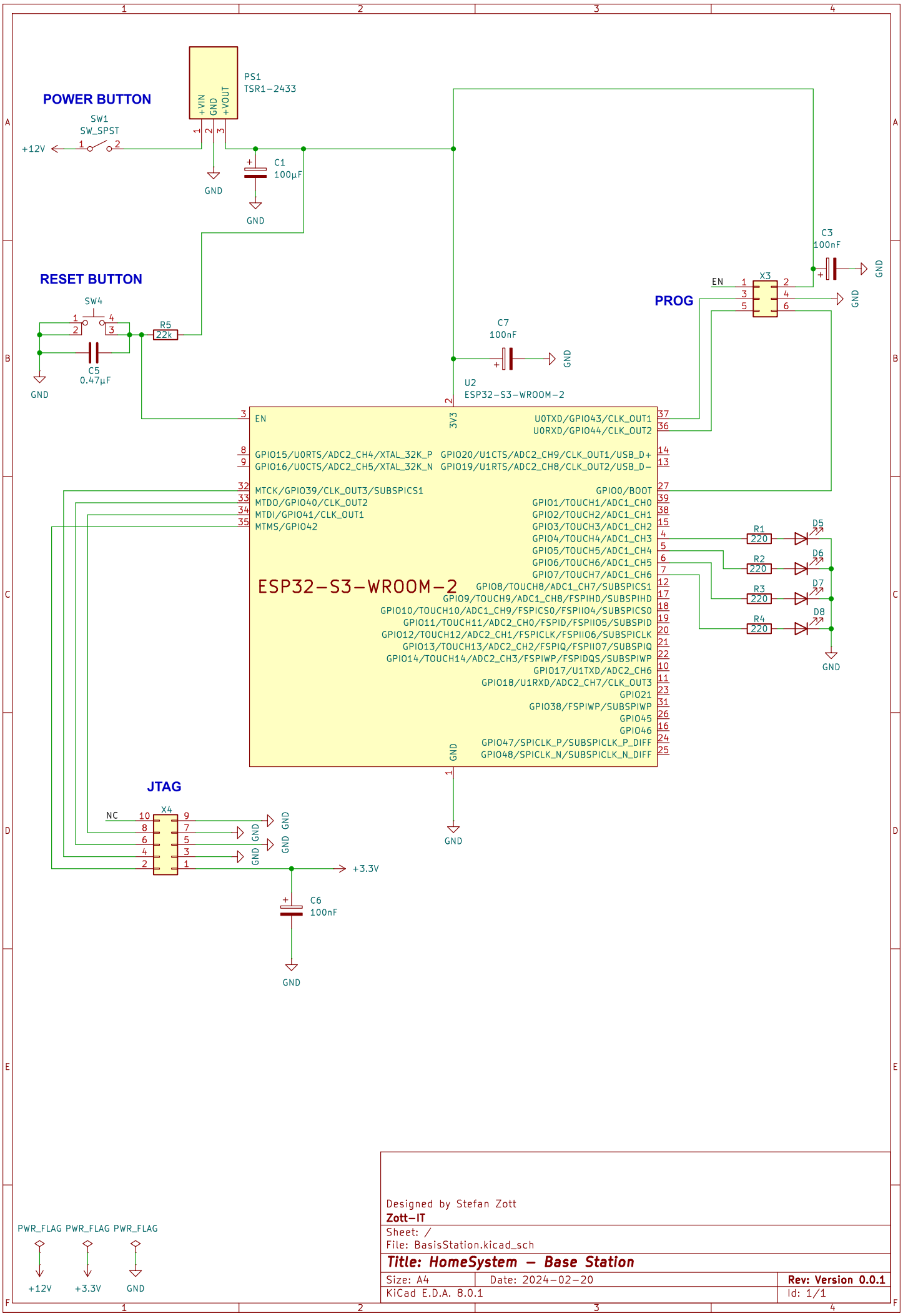

Designed by Stefan Zott
Zott-IT

Sheet: /
File: BasisStation.kicad_sch

Title: HomeSystem – Base Station

Size: A4	Date: 2024-02-20	**Rev: Version 0.0.1**
KiCad E.D.A. 8.0.1		Id: 1/1