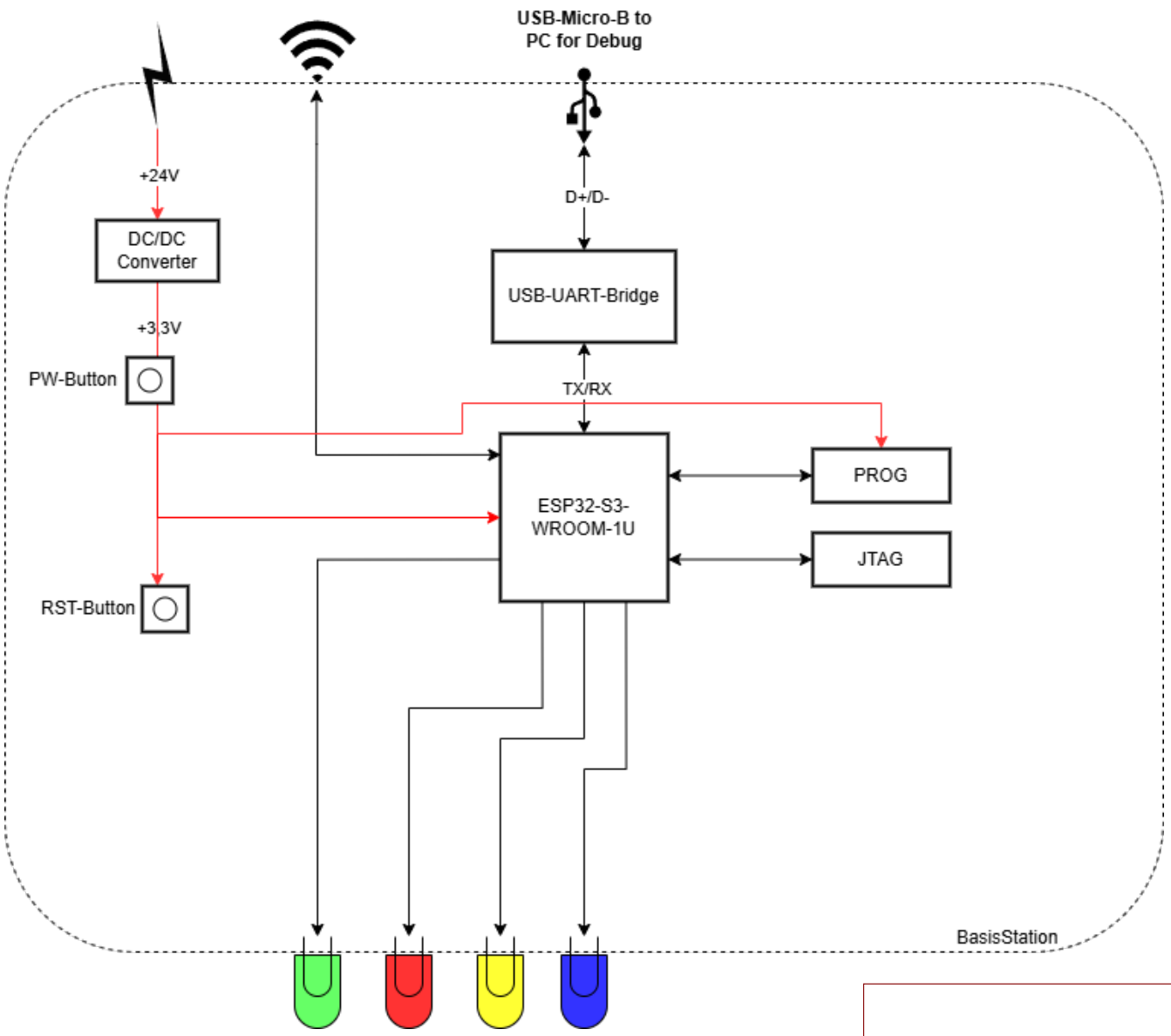


Sheet: /
File: BasisStation.kicad_sch

**Title: Architektur**

| | | |
|---|---|---|
| Size: A4 | Date: 2025-02-20 | Rev: 0.0.1 |
| KiCad E.D.A. 9.0.7 | | Id: 1/3 |

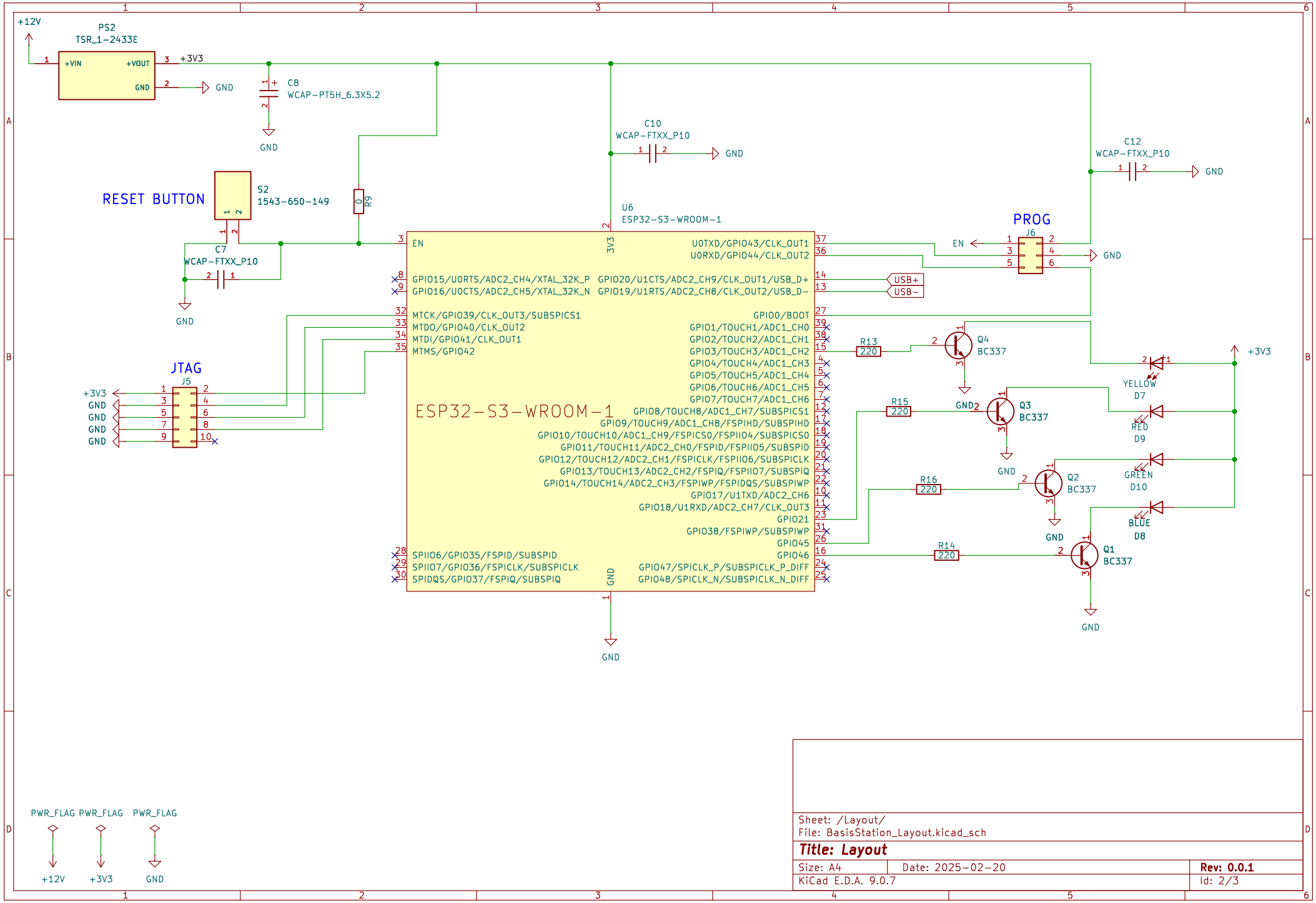


Sheet: /Layout/
File: BasisStation_Layout.kicad_sch

**Title: Layout**

| | | |
|---|---|---|
| Size: A4 | Date: 2025-02-20 | Rev: 0.0.1 |
| KiCad E.D.A. 9.0.7 | | Id: 2/3 |

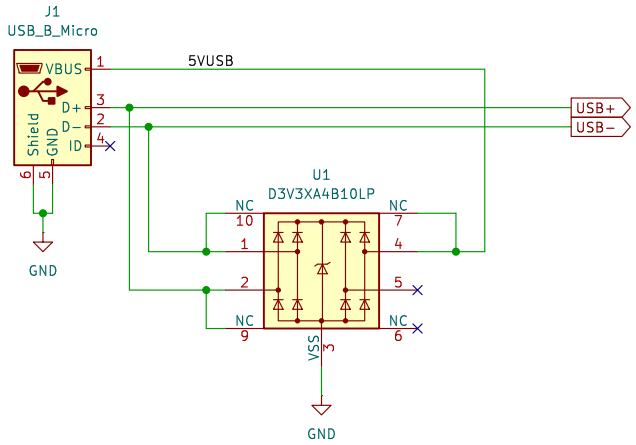


Sheet: /Debugging/
File: BasisStation_Debugging.kicad_sch

**Title: Debugging**

| | | |
|---|---|---|
| Size: A4 | Date: 2025-02-20 | **Rev: 0.0.1** |
| KiCad E.D.A. 9.0.7 | | Id: 3/3 |