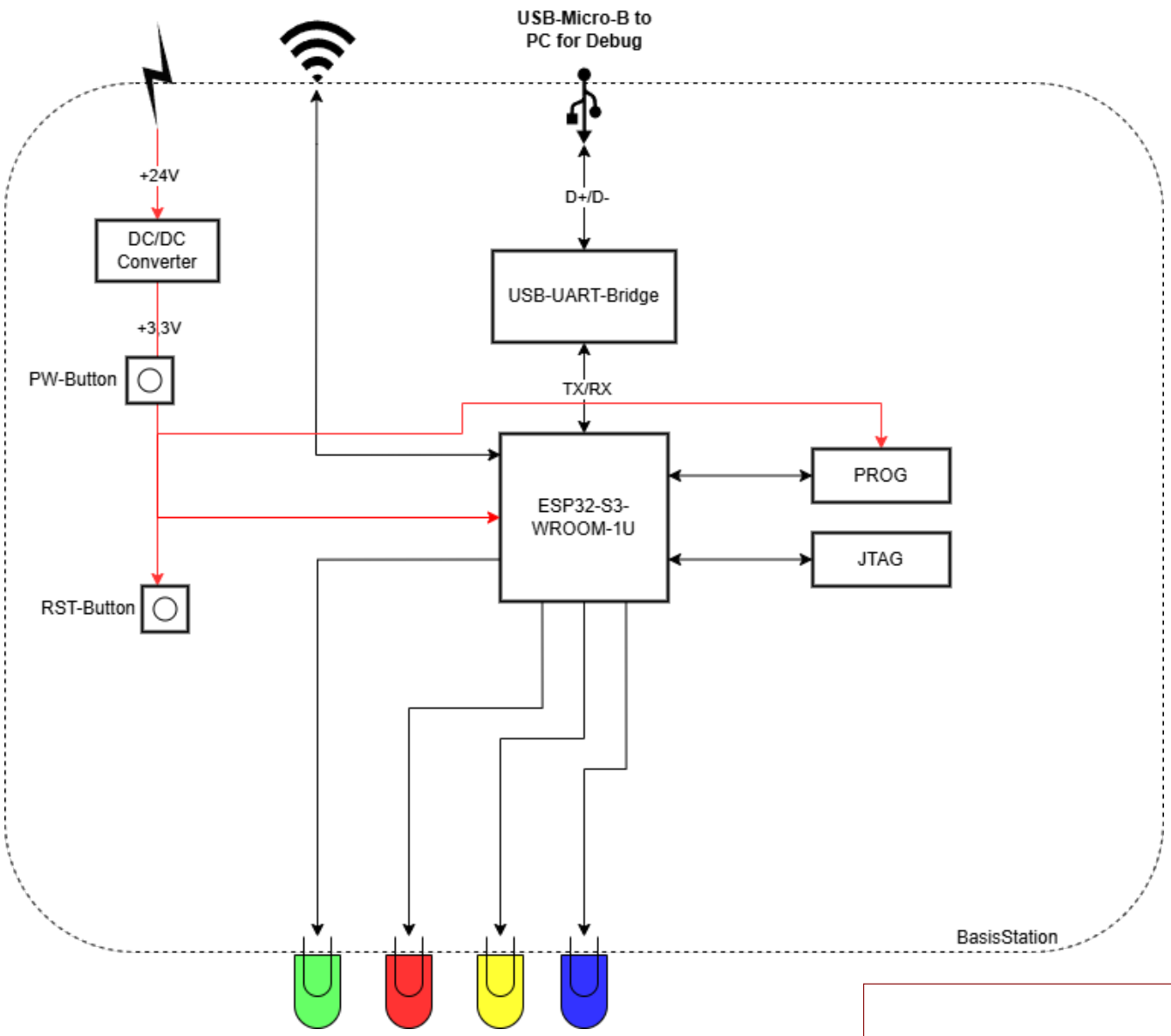

Sheet: /
File: BasisStation.kicad_sch

Title: Architektur

Size: A4	Date: 2025-02-20	Rev: 0.0.1
KiCad E.D.A. 9.0.7		Id: 1/3

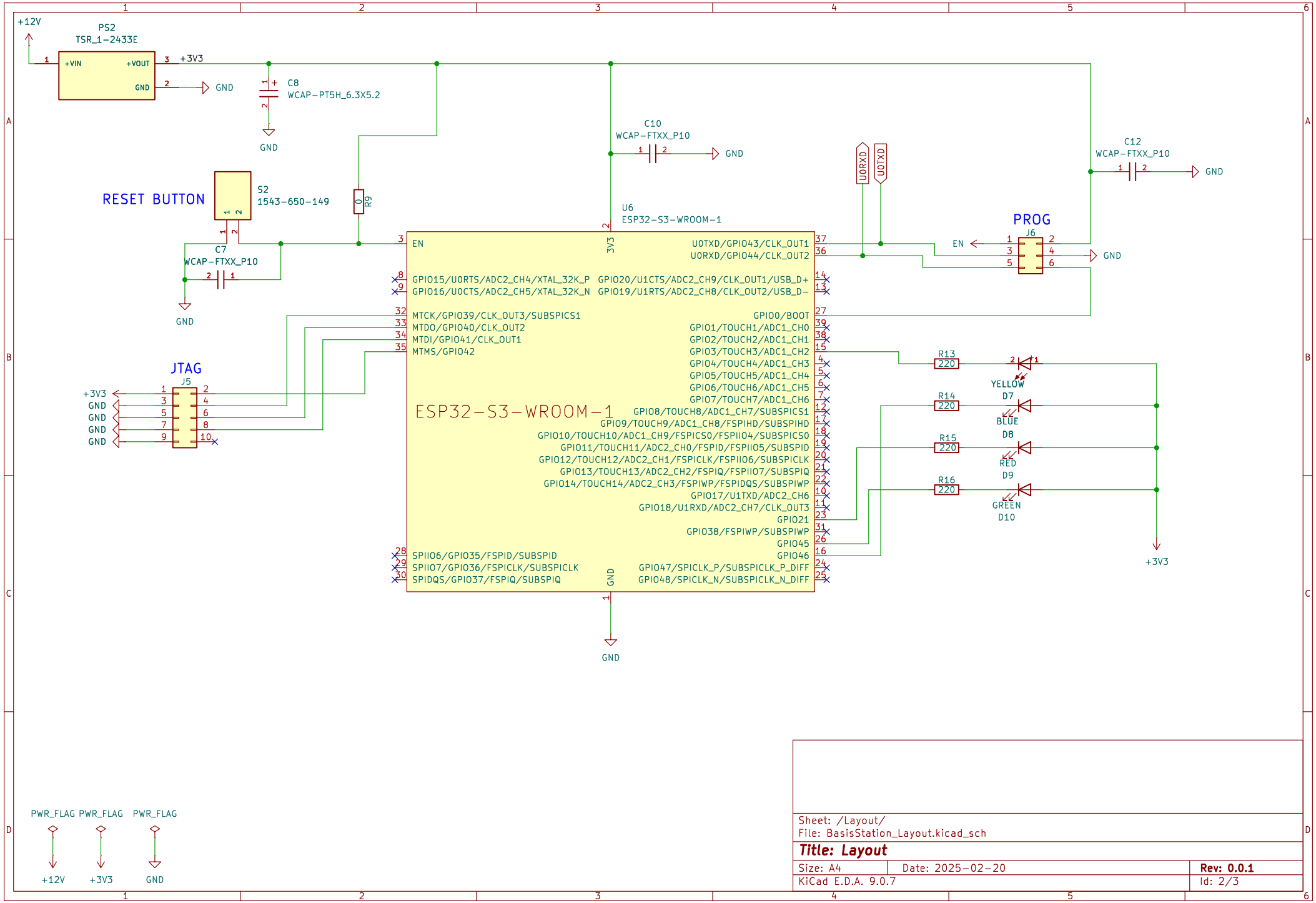

Sheet: /Layout/
File: BasisStation_Layout.kicad_sch

Title: Layout

Size: A4	Date: 2025-02-20	Rev: 0.0.1
KiCad E.D.A. 9.0.7		Id: 2/3

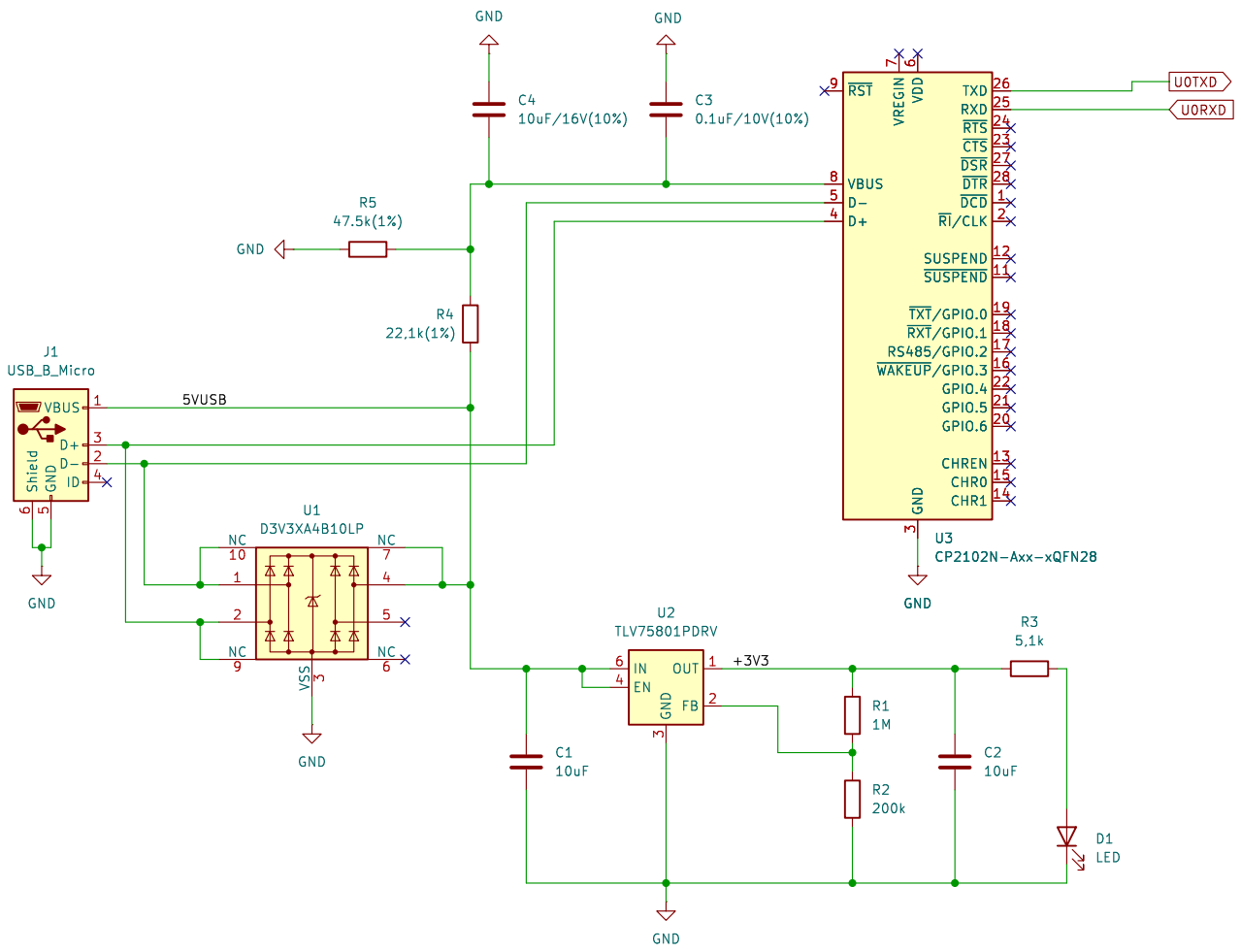

Sheet: /Debugging/
File: BasisStation_Debugging.kicad_sch

Title: Debugging

Size: A4	Date: 2025-02-20	Rev: 0.0.1
KiCad E.D.A. 9.0.7		Id: 3/3