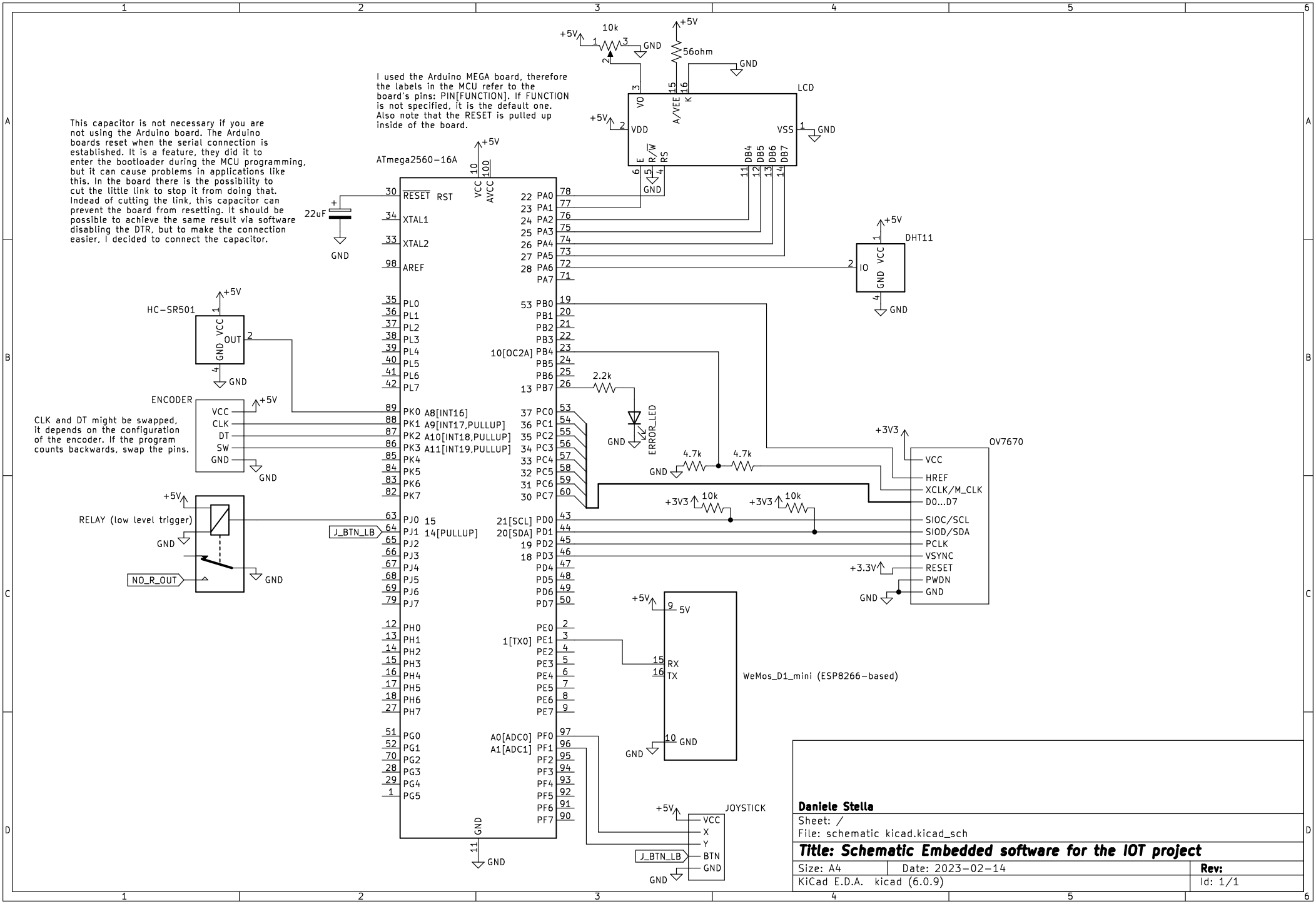
I used the Arduino MEGA board, therefore the labels in the MCU refer to the board's pins: PIN[FUNCTION]. If FUNCTION is not specified, it is the default one. Also note that the RESET is pulled up inside of the board.
This capacitor is not necessary if you are not using the Arduino board. The Arduino boards reset when the serial connection is established. It is a feature, they did it to enter the bootloader during the MCU programming, but it can cause problems in applications like this. In the board there is the possibility to cut the little link to stop it from doing that. Indead of cutting the link, this capacitor can prevent the board from resetting. It should be possible to achieve the same result via software disabling the DTR, but to make the connection easier, I decided to connect the capacitor.
ATmega2560-16A
LCD
DHT11
HC-SR501
ENCODER
CLK and DT might be swapped, it depends on the configuration of the encoder. If the program counts backwards, swap the pins.
RELAY (low level trigger)
OV7670
WeMos_D1_mini (ESP8266-based)
JOYSTICK
ERROR_LED
J_BTN_LB
NO_R_OUT
Daniele Stella
Sheet: /
File: schematic kicad.kicad_sch
Title: Schematic Embedded software for the IOT project
Size: A4
Date: 2023-02-14
Rev:
KiCad E.D.A. kicad (6.0.9)
Id: 1/1