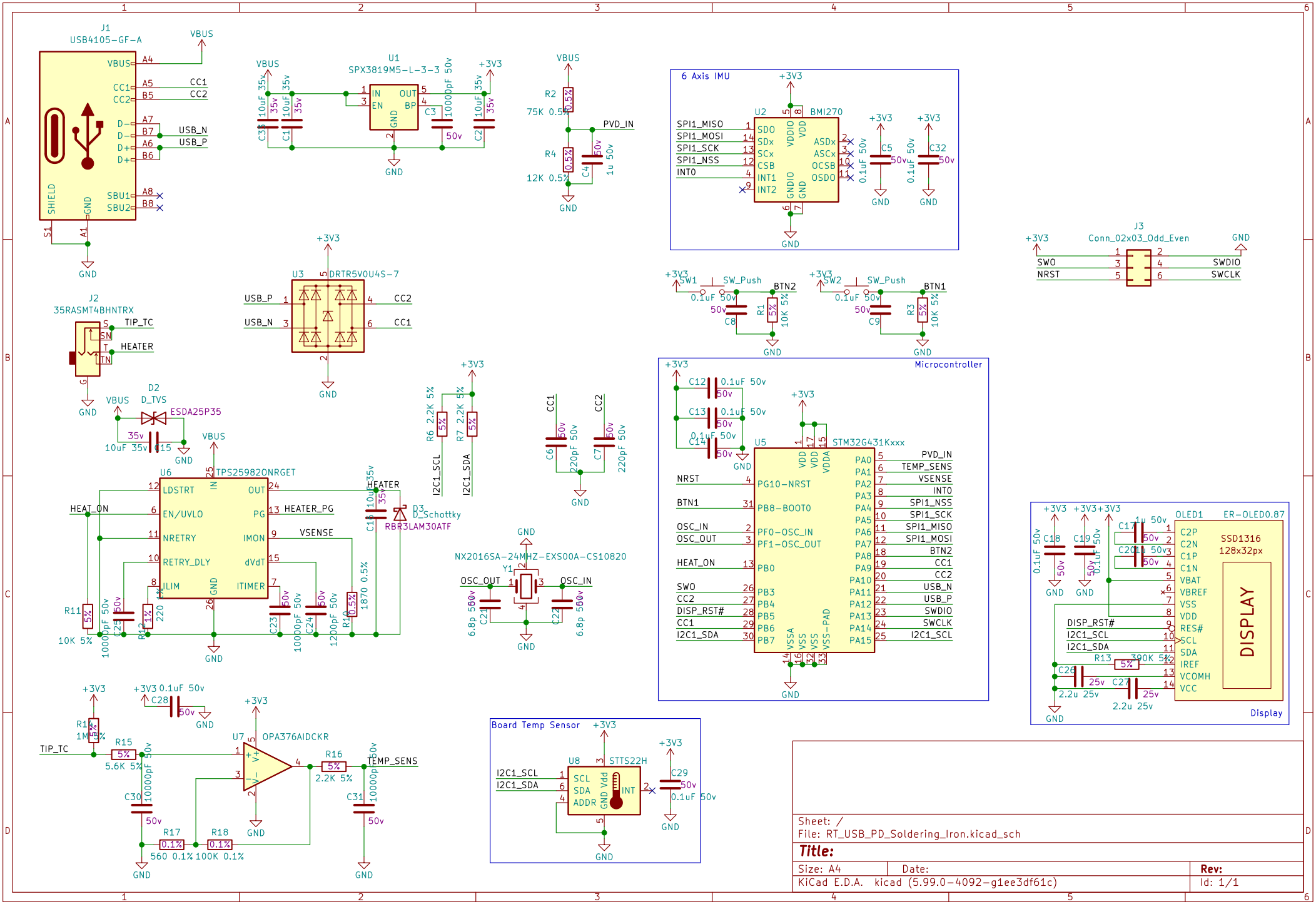
J1
USB4105-GF-A
VBUS
CC1
CC2
USB_N
USB_P
SHIELD
GND
U1
SPX3819M5-L-3-3
IN
EN
OUT
BP
+3V3
R2
75K 0.5%
R4
12K 0.5%
PVD_IN
6 Axis IMU
U2
BMI270
SPI1_MISO
SPI1_MOSI
SPI1_SCK
SPI1_NSS
INT0
SDO
SDx
SCx
CSB
INT1
INT2
VDDIO
VDD
GNDIO
ASDx
ASCx
OCSB
OSDO
J3
Conn_02x03_Odd_Even
SWO
NRST
SWDIO
SWCLK
U3
DRTR5V0U4S-7
J2
35RASMT4BHNTRX
TIP_TC
HEATER
D2
D_TVS
ESDA25P35
SW1
SW_Push
BTN2
SW2
BTN1
R1
10K 5%
R3
10K 5%
Microcontroller
U5
STM32G431Kxxx
PG10-NRST
PB8-BOOT0
PF0-OSC_IN
PF1-OSC_OUT
PB0
PB3
PB4
PB5
PB6
PB7
PA0
PA1
PA2
PA3
PA4
PA5
PA6
PA7
PA8
PA9
PA10
PA11
PA12
PA13
PA14
PA15
VSSA
VSS
VSS-PAD
U6
TPS25982ONRGET
LDSTRT
EN/UVLO
NRETRY
RETRY_DLY
ILIM
OUT
PG
IMON
dVdT
ITIMER
HEAT_ON
HEATER_PG
VSENSE
D3
D_Schottky
RBR3LAM30ATF
R6 2.2K 5%
R7 2.2K 5%
I2C1_SCL
I2C1_SDA
NX2016SA-24MHZ-EXS00A-CS10820
Y1
OSC_OUT
OSC_IN
R11
10K 5%
R12
220
R10
1870 0.5%
U7
OPA376AIDCKR
R14
1M 5%
R15
5.6K 5%
R16
2.2K 5%
R17
560 0.1%
R18
100K 0.1%
TEMP_SENS
Board Temp Sensor
U8
STTS22H
SCL
SDA
ADDR
GND
Vdd
INT
OLED1
ER-OLED0.87
SSD1316
128x32px
DISPLAY
C2P
C2N
C1P
C1N
VBAT
VBREF
VSS
VDD
RES#
SCL
SDA
IREF
VCOMH
VCC
R13
390K 5%
Display
Sheet: /
File: RT_USB_PD_Soldering_Iron.kicad_sch
Title:
Size: A4
Date:
Rev:
KiCad E.D.A. kicad (5.99.0-4092-g1ee3df61c)
Id: 1/1