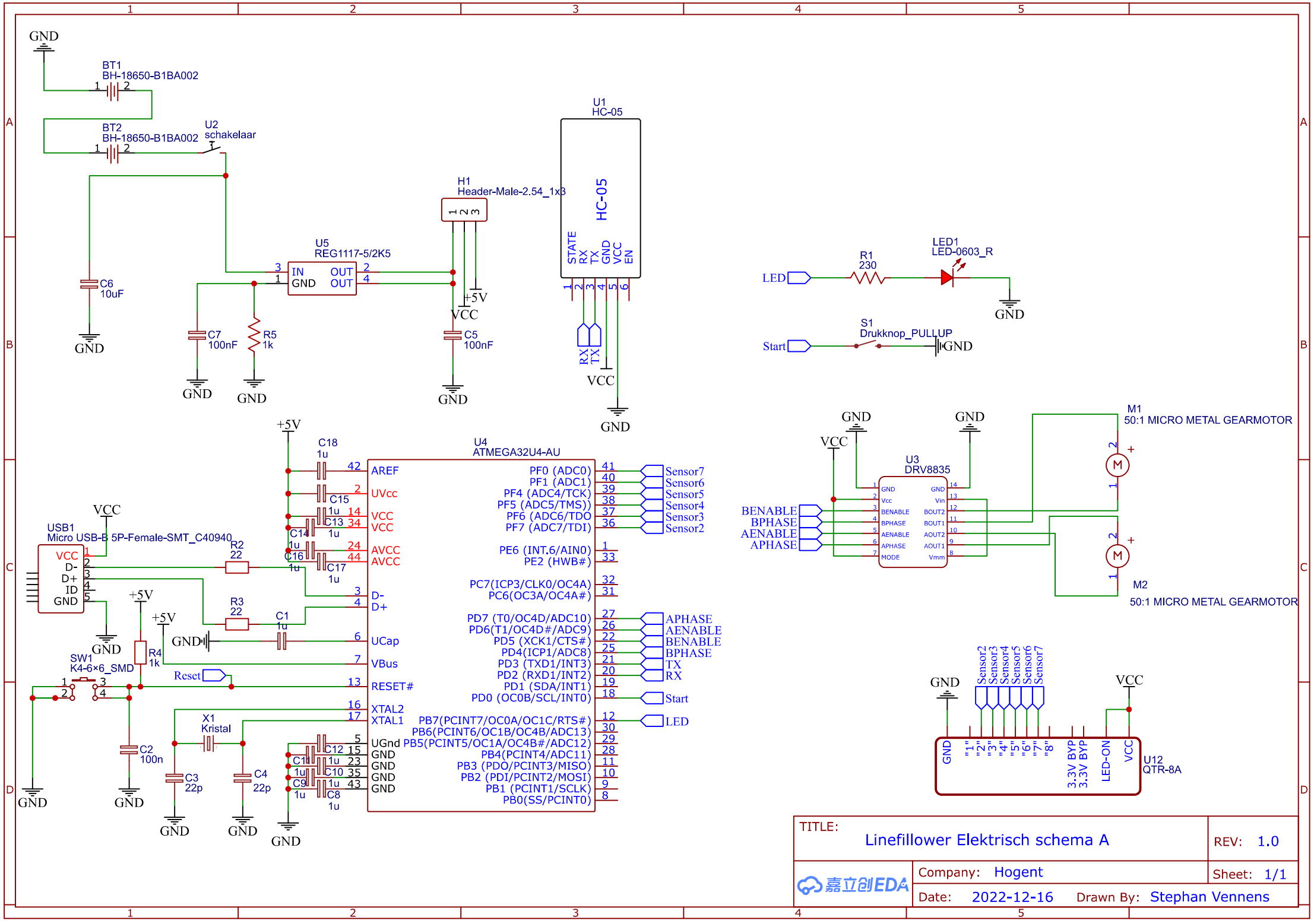
GND
BT1
BH-18650-B1BA002
BT2
BH-18650-B1BA002
U2
schakelaar
C6
10uF
U5
REG1117-5/2K5
IN
GND
OUT
OUT
C7
100nF
R5
1k
H1
Header-Male-2.54_1x3
+5V
VCC
C5
100nF
U1
HC-05
HC-05
STATE
RX
TX
GND
VCC
EN
RX
TX
LED
R1
230
LED1
LED-0603_R
Start
S1
Drukknop_PULLUP
USB1
Micro USB-B 5P-Female-SMT_C40940
VCC
D-
D+
ID
GND
R2
22
R3
22
C1
1u
R4
1k
SW1
K4-6×6_SMD
Reset
C2
100n
X1
Kristal
C3
22p
C4
22p
C18
1u
C15
1u
C13
1u
C14
1u
C16
1u
C17
1u
C12
1u
C11
1u
C10
1u
C9
1u
C8
1u
U4
ATMEGA32U4-AU
AREF
UVcc
VCC
VCC
AVCC
AVCC
D-
D+
UCap
VBus
RESET#
XTAL2
XTAL1
UGnd
GND
GND
GND
GND
PF0 (ADC0)
PF1 (ADC1)
PF4 (ADC4/TCK)
PF5 (ADC5/TMS))
PF6 (ADC6/TDO
PF7 (ADC7/TDI)
PE6 (INT.6/AIN0)
PE2 (HWB#)
PC7(ICP3/CLK0/OC4A)
PC6(OC3A/OC4A#)
PD7 (T0/OC4D/ADC10)
PD6(T1/OC4D#/ADC9)
PD5 (XCK1/CTS#)
PD4(ICP1/ADC8)
PD3 (TXD1/INT3)
PD2 (RXD1/INT2)
PD1 (SDA/INT1)
PD0 (OC0B/SCL/INT0)
PB7(PCINT7/OC0A/OC1C/RTS#)
PB6(PCINT6/OC1B/OC4B/ADC13)
PB5(PCINT5/OC1A/OC4B#/ADC12)
PB4(PCINT4/ADC11)
PB3 (PDO/PCINT3/MISO)
PB2 (PDI/PCINT2/MOSI)
PB1 (PCINT1/SCLK)
PB0(SS/PCINT0)
Sensor7
Sensor6
Sensor5
Sensor4
Sensor3
Sensor2
APHASE
AENABLE
BENABLE
BPHASE
TX
RX
Start
LED
U3
DRV8835
GND
Vcc
BENABLE
BPHASE
AENABLE
APHASE
MODE
GND
Vin
BOUT2
BOUT1
AOUT2
AOUT1
Vmm
BENABLE
BPHASE
AENABLE
APHASE
M1
50:1 MICRO METAL GEARMOTOR
M2
50:1 MICRO METAL GEARMOTOR
Sensor2
Sensor3
Sensor4
Sensor5
Sensor6
Sensor7
GND
VCC
"1"
"2"
"3"
"4"
"5"
"6"
"7"
"8"
3.3V BYP
3.3V BYP
LED-ON
VCC
U12
QTR-8A
TITLE:
Linefillower Elektrisch schema A
REV: 1.0
Company: Hogent
Sheet: 1/1
Date: 2022-12-16
Drawn By: Stephan Vennens
嘉立创EDA