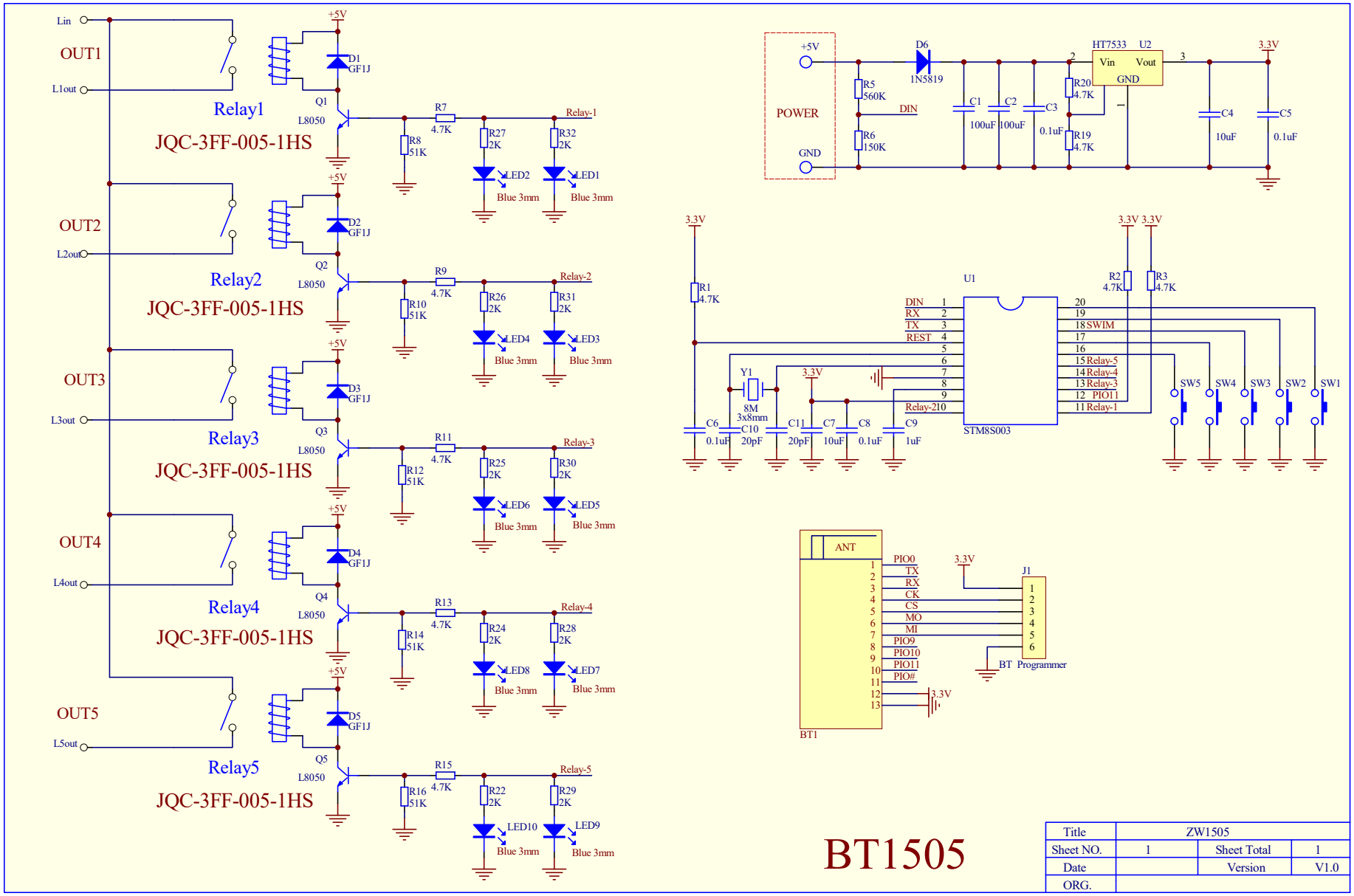

BT1505

Title	ZW1505		
Sheet NO.	1	Sheet Total	1
Date		Version	V1.0
ORG.			