Hybrid Data Assimilation Methods: Application to the DYNASTY Experimental Facility

S. Riva[1], A. Cammi[1], C. Introini[1], S. Lorenzi[1]
[1] Politecnico di Milano, Department of Energy, Via Lambruschini, 4, 20156 Milan, Italy
stefano.riva@polimi.it, antonio.cammi@polimi.it, carolina.introini@polimi.it, stefano.lorenzi@polimi.it

ABSTRACT

Theoretical modelling of complex systems using Partial Differential Equations (PDE) is one of the most used techniques for design and optimization. The main limitation of this approach is the associated computational cost of the numerical solution, which prevents quick repetitive solving, necessary, for instance, in control applications. The hypotheses and approximations for the model derivation and the uncertainty on the parameters represent additional limitations of mathematical models. In this context, Hybrid Data Assimilation (HDA) methods may help overcome these bottlenecks. These methods aim at integrating Model Order Reduction (MOR) approaches into a Data Assimilation framework. This integration reduces the solution time whilst keeping the accuracy of the models to the desired level. The evaluation of fields then serves as an update to the a priori prediction of the model. Despite being very promising, these techniques need to be tested on complex systems and validated with experimental data. This work aims at being the first step for a deep validation phase to assess their efficiency and reliability. This work applies the Generalized Empirical Interpolation Method (GEIM) and the Parametrized-Background Data-Weak (PBDW) formulation to DYNASTY, an experimental facility for studying natural circulation built at Politecnico di Milano. For the time being, the analysis considers only synthetic data and thus preliminary results only. Nevertheless, they show the potentiality of the discussed methods even when considering complex systems.

KEYWORDS: ***GEIM, PBDW, DYNASTY, Model Order Reduction, Data Assimilation***

1. INTRODUCTION

The latest achievements in numerical analysis and scientific computing have led numerical simulations in engineering and applied sciences to gain increasing importance for investigating physical phenomena. Typically, such analysis relies on solving parametrized Partial Differential Equations (PDEs), commonly referred to as the Full Order Model (FOM). Since a direct analytical solution is rarely available, especially for complex problems, their solution needs to use standard numerical methods. Despite the recent developments regarding computational hardware power and numerical software accuracy, typical engineering problems require several hours (or even days) of CPU time to numerically solve the system, even on large hardware parallel architectures.

Despite parametrized PDEs being used for the design and optimization phase for physical systems ([1, 2]), they are not suited for large systems because of the associated computational cost, especially when quick repetitive solutions are required. In this sense, Model Order Reduction (MOR) is a promising tool; in literature, this expression refers to any approach aimed at replacing the high-fidelity problem with one featuring much lower complexity ([3, 4]). This set of techniques, developed originally for control theory, aims to study a dynamical system while preserving its input-output behaviour as much as possible. As the name itself suggests, MOR tries to reduce the dimension of the model to perform faster simulations, ensuring the preservation of the essential features of the physical phenomena. However, these methods cannot have results as accurate as of the FOM ones, which can be a critical issue for all those applications that, for safety reasons, always require strict monitoring of the physical system.

In addition, in the last few years, there have been many improvements in Data Assimilation (DA) ([5, 6]), which is a mathematical discipline that deals with the combination of theoretical modelling and experimental observations. Compared to machine learning and, in general, to black-box methods in which the surrogate model refers to *a priori* knowledge only, this approach allows to keep the mathematical structure of the problem and include additional information coming from the physical system. In Hybrid Data Assimilation (HDA) methods, the theoretical prediction, approximated via MOR, is corrected, or updated, by experimental evaluations of some fields (e.g., the measure of the temperature in a pipe or the neutron flux in a nuclear reactor) coming in real-time from the physical system. As HDA deals with experimental data, the correct positioning of the measurements sensors to maximize the amount of information extracted by the physical system must be considered. MOR methods in a DA framework can also deal with this problem. In general, this hybrid approach is of interest in several engineering fields, especially in nuclear reactors, where continuous feedback from the physical system is required to ensure the control and safety of the system during operation.

In literature there are a lot of works focused on a particular class of MOR methods, namely Reduced Basis methods ([4, 7]). Among them the Proper Orthogonal Decomposition (POD) is of the most widespread methods, especially in fluid dynamics ([8]–[10]) and nuclear applications ([11, 12]). This approach can provide good results; however, being a model-based method, it cannot accommodate experimental data, and it is limited by the accuracy of the mathematical model itself. Therefore, a DA framework requires other MOR approaches: in particular, this work focuses on the Generalized Empirical Interpolation Method (GEIM) ([13, 14]) and the Parametrized-Background Data-Weak (PBDW) ([15, 16]), with the latter theoretically describing the mathematical background of hybrid data assimilation methods. The main difference between the two is the fact that the PBDW is more general, and it has been designed to accommodate different methods in itself [17]: indeed, the GEIM can be retrieved from PBDW. Both will be studied to highlight the main differences in reconstructing a certain field.

This work studies and compares the performance of the GEIM and the PBDW techniques. They are both HDA methods, which combine the theoretical predictions and the experimental observation. Indeed, the mathematical model is used as the starting point and as the primary source of information; conversely, the experimental data represents an update. The literature concerning the application of these methods to physical complex systems is scarce: most of the works focus on benchmark, the goal of this work is a preliminary assessment of the reliability and the main limitations of these techniques to a real-world problem. This work uses as verification the DYNASTY (DYnamics of NAtural circulation for molten SalT internallY heated) experimental facility at the Energy Laboratories at Politecnico di Milano ([18, 19]). Dealing with a real system, even with synthetic data, introduces some limitations in the HDA methods: for instance, the number of sensors and their position may be limited by experimental facility; therefore, it is important to assess the influence on the performance of the techniques.

The paper is organized as follows: Sections 2 and 3 present a brief discussion on GEIM and PBDW; Section 4 is then devoted to the description of the experimental facility and the preliminary verification of the techniques, considering only synthetic data. Throughout the paper, the methods will be referred to as MOR methods, even though they are HDA approaches.

1.1 GENERAL MATHEMATICAL BACKGROUND

In this section a brief description of HDA background will be presented. As for MOR, these techniques are characterized by an offline-online decomposition: during the former the FOM requires to be solved several times to build a Train Set of snapshots, then the reduced space must be built with a suitable algorithm and the sensors positions must be determined, these steps are computationally expensive, even though they are performed only once; the latter involves the solution of a reduced model, which can be a “small” system of Ordinary Differential Equations (ODEs) or a linear system, anyhow both are quick to solve, hence a lot of evaluations can be performed. The main idea behind HDA methods is reported in **Figure *1***.

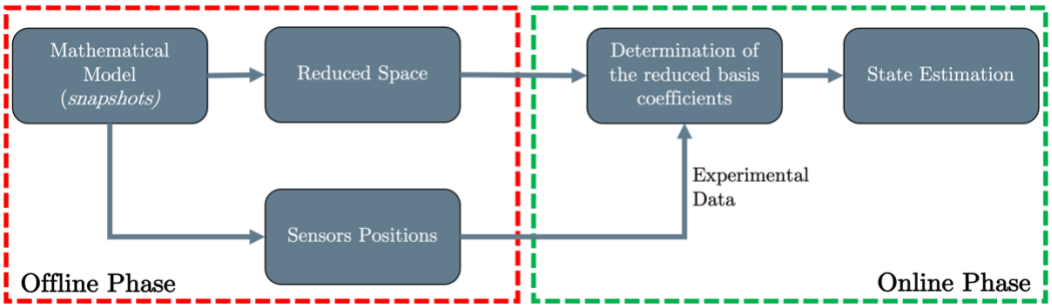

Figure 1: General idea behind HDA techniques.

The accuracy of the state estimation, through a reduced basis approach in a data assimilation framework, is directly linked to an important mathematical concept, the Kolmogorov n-th width [20]: it measures to what extent a certain Banach space[1] can be approximated by a n-dimensional subspace of it. A certain FOM is said to be reducible, if it has a small n-th width [4]; even though it is not trivial to directly compute this quantity, the reducibility of a problem can be assessed by looking at its POD eigenvalues.

2. GENERALIZED EMPIRICAL INTERPOLATION METHOD

This technique was introduced in [13], and it aims at building hierarchical spaces to approximate the given function with the following interpolant

$$u(\vec{x};\mu) \simeq I_M[u](\vec{x}) = \sum_{m=1}^{M} \beta_m(\mu) \cdot q_m(\vec{x}) \tag{1}$$

where the spatial behaviour is captured by the so-called magic functions $\{q_m\}_{m=1}^{M}$ and the parametric dependence by the coefficients $\{\beta_m\}_{m=1}^{M}$. The generation of the reduced basis is performed through a greedy procedure [14], whose main ingredients are the solution manifold U of the functions, the parameter space D and a library Υ of functionals $v: U \to \mathbb{R}$. This technique exploits an iterative procedure, building at each step a reduced space[2]. The offline procedure takes as input some snapshots (i.e., solution to a certain FOM) and returns a set of magic functions and magic sensors $\{v_m\}_{m=1}^{M}$, by minimizing step by step the interpolation error. This selection of the sensors can be used to define the best experimental setup (i.e., the best positions of sensors), to maximize the amount of information extracted by the physical system. The complete algorithm can be found in [14], whereas its convergence analysis has been presented in [21].

For what concerns the online phase, once the data have been collected

$$y_m = v_m(u^{true}(\vec{x}); s) + \varepsilon_m \qquad m = 1, \dots M \tag{2}$$

where ε_m represents different kind of disturbances, usually modelled by an uncorrelated zero-mean Gaussian random variable with standard deviation σ. This term has a strong impact on the interpolation error: if when considering noise-free measurements the GEIM is well-posed (i.e., the interpolant is unique and the interpolation error is bounded, [21]), introducing noise on the data makes the interpolation error diverge [22]. Therefore, a stabilization procedure is required: the approach developed in [23] will be used, in which the Tikhonov regularization is exploited to cure the ill-posed problem. This stabilized version will be referred to as TR-GEIM. Both the versions involve the solution of a linear system during the online phase

$$\text{GEIM:} \;\; B\,\vec{\beta} = \vec{y} \tag{3}$$

[1] FOMs are usually set in an Hilbert space, that is a particular Banach space [34].
[2] These spaces are hierarchical, thus the more sensors/functionals and magic functions are considered the wider the space becomes.

$$\text{TR-GEIM: } (B^T B + \lambda T)\, \vec{\beta} = B^T \vec{y} + \lambda T \, \langle \vec{\beta} \rangle$$

where $B_{ij} = v_i(q_j)$ is the matrix of GEIM [14], T and λ are, respectively, the regularization matrix[3] and parameter. This last term should be calibrated according to the noise level σ.

3. PARAMETRIZED-BACKGROUND DATA-WEAK FORMULATION

In this method, to estimate the true state $u^{true} \in U$ of a system over the domain Ω, two main ingredients are considered: a FOM, also called *best-knowledge* model, and a set of experimental observations $\vec{y} \in \mathbb{R}^M$, generally decomposed as in Eq. (2). The starting point of this formulation is the 3D-VAR (Variational Assimilation) method [6], whose solution requires to have multiple evaluation of the mathematical model. For complex models, this is not feasible due to the large computational costs of multiple evaluations, therefore a MOR approach through reduced basis is used, introducing the N-th rank approximation $Z_N = span\{\zeta_1, \dots, \zeta_N\}$ of U. Then, the state estimation $u^\star$ is decomposed as $u^\star = z^\star + \gamma^\star$, in which the first term is the deduced background which represents the information coming from the mathematical model (along with its modelling error), whereas the second term is the update that accommodates unanticipated information or non-parametric uncertainty. These two terms are the solution of the PBDW statement [16]

$$(z^\star, \gamma^\star) = \underset{(z,\gamma)\in Z_N \times U}{\arg\min} \|\gamma\|^2_{L^2(\Omega)} \quad s.t. \quad v_m(z+\gamma) = y_m, \quad m = 1, \dots M \tag{4}$$

3.1. Model Order Reduction role

The introduction of reduced basis methods in Eq. (4) is a necessary step to ensure a simple algebraic formulation, so that during the online phase, only a linear system of small size must be solved. The reduced space Z_N can be generated with different algorithms, this flexibility is of the main advantages of the PBDW, with respect to GEIM. The size of the reduced space Z_N is quite important for two main reasons: 1) the best fit error (between the *best-knowledge* solution and the reconstructed one) should be low enough, which implies that N has to be sufficiently high; 2) N should be lower than the number of observations M for the sake of the stability of the PBDW formulation [24]. In this work, the Weak Greedy Algorithm [25] will be used to build the reduced space, this choice ensures a nearly optimal space in $\|\cdot\|_{L^2(\Omega)}$ comparable to the one generated by POD [3].

The update γ must be set in a finite dimension space $U_M = span\{g_1, g_2, \dots, g_M\}$, where g_m are the Riesz representations of the sensors v_m [26]. The sensors must be selected according to some criteria [16], in order to ensure a good coverage of the domain and to maximize the amount of information extracted by physical system. In this work, this selection is performed with the GEIM greedy algorithm, for the sake of simplicity, even though the PBDW allows the use of other criteria [16].

Let $A \in \mathbb{R}^{M\times M}$ and $K \in \mathbb{R}^{M\times N}$ be matrices defined as

$$A_{mm'} = (g_m g_{m'})_{L^2(\Omega)} \qquad K_{mn} = (g_m, \zeta_n)_{L^2(\Omega)} = v_m(\zeta_n) \tag{5}$$

The state estimation can be expressed as

$$u^\star(\vec{x}) = \sum_{m=1}^{M} \gamma_m \cdot g_m(\vec{x}) + \sum_{n=1}^{N} z_n \cdot \zeta_n(\vec{x}) \tag{6}$$

in which the coefficients $\vec{\gamma} \in \mathbb{R}^M$ and $\vec{z} \in \mathbb{R}^n$ are the solution of the following linear system

[3] The same definition of [23] will be used, even though other choices can be made.

$$\begin{bmatrix} A & K \\ K^T & 0 \end{bmatrix} \cdot \begin{bmatrix} \vec{\gamma} \\ \vec{z} \end{bmatrix} = \begin{bmatrix} \vec{y} \\ \vec{0} \end{bmatrix} \tag{7}$$

As typically occurs in MOR methods, the procedure is divided into an offline (more demanding from a computational point of view) and an online stage (rather fast). The former includes the construction of the reduced space Z_N, the selection of the sensors and the assembly of the matrices, whereas the latter involves the acquisition of the experimental data, the solution of the linear system and the state estimation.

4. APPLICATION ON THE DYNASTY EXPERIMENTAL FACILITY MODEL

The standard approach found in literature consists in assessing the reliability of these methods on numerical benchmark case. This work is focused on the application of these techniques on a real experimental facility, still considering synthetic data. This preliminary assessment is necessary step, before dealing with real experimental data, to demonstrate that these methods are mature to be applied on real systems.

4.1. Description of the system

DYNASTY (DYnamics of NAtural circulation for molten SalT internallY heated) is an experimental facility that has been built at the Energy Labs of Politecnico di Milano [18]. It is a $3\,m \times 3\,m$ rectangular loop that has been designed to study natural circulation, a matter of great interest for the Generation IV Molten Salt Fast Reactor (MSFR) [27], it has been designed to accommodate different working fluids, such as molten salt, water or a mixture of propylene glycol and water.

The DYNASTY loop has been completely built with stainless steel (AISI-36) to sustain the expected high operative temperature; the inner diameter is 38 mm with 2 mm thickness. The loop is composed by four different sections, three of which are equipped with electrical resistors[4] (GV1, GV2, GO1-2) to simulate the internal heat generation that occurs in the MSFR; the last section (the cooler) extracts heat from the fluid; this section is equipped with a finned tube to improve the heat transfer area (**Figure *2***).

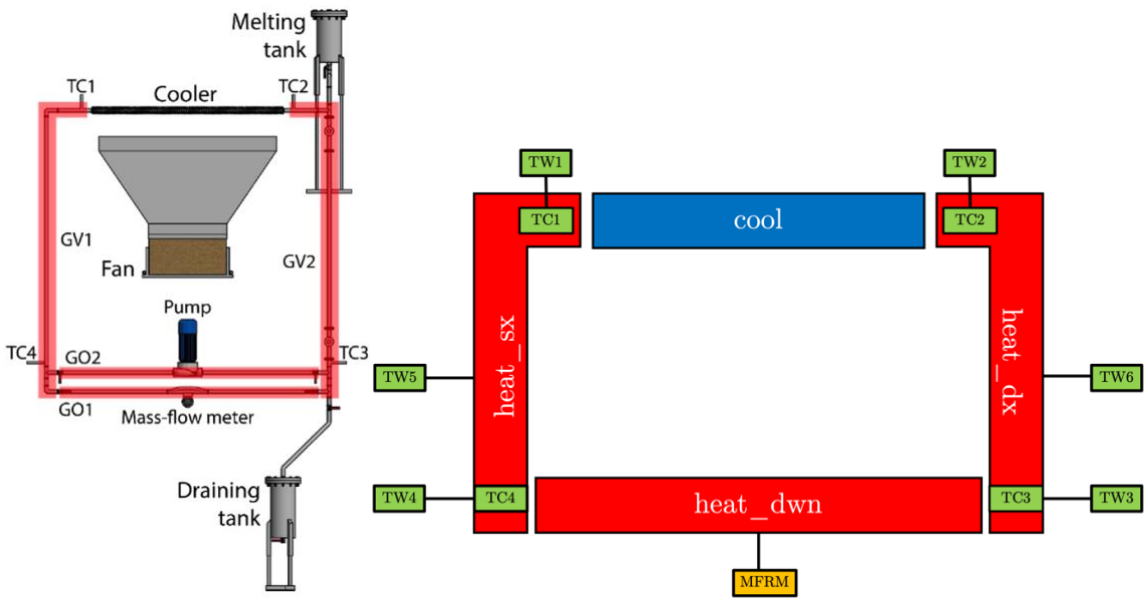

Figure 2: scheme of the DYNASTY experimental facility and experimental setup.

The heat is extracted from the cooler region through a fan, which has a maximum airflow rate of 14500

[4] These three parts will be referred to as *heat_sx, heat_dx* and *heat_dwn*, respectively, in the CFD model.

$\frac{m^3}{h}$ and an area of 1.4 m^2. The total power output is 5.3 kW, which approximates the decay power that a molten salt nuclear fuel experiences during the shutdown phase. With DYNASTY, different configurations can be studied: in fact, the resistors can be all turned on at the same time or they can act separately leg by leg. During this work, only the Distributed Heating (DH) case is going to be considered, because it is the one that better represents the actual MSFR design.

Several works have been carried out on this experimental facility to develop a proper mathematical model, able to properly study the natural circulation regime established within. In particular, a 3D CFD (Computational Fluid Dynamics) model in OpenFOAM [28] was developed in [29], [30] using the HITEC salt as working fluid and implementing different turbulence treatments; on the other hand, a 1D model in DYMOLA with water as working fluid was developed in [31]. Since the scope of this work is to demonstrate the reliability of MOR methods with 3D CFD models, an OpenFOAM model will be considered using water, since the available experimental data were collected with this working fluid and in the future a validation phase with real data is foreseen.

4.2. Modelling choices

The 3D model is composed by a solid and a fluid region, hence different equations for the two regions must be solved. For what concerns the fluid, the unsteady compressible Navier-Stokes equations with energy balance will be solved

$$\begin{cases} \frac{\partial \rho}{\partial t} + \nabla \cdot (\rho\, \vec{u}) = 0 \\ \frac{\partial (\rho\, \vec{u})}{\partial t} + \nabla \cdot (\rho \vec{u} \otimes \vec{u}) = -\nabla p + \nabla \cdot \tau + \rho\, \vec{g} \\ \frac{\partial (\rho E)}{\partial t} + \nabla \cdot (\rho E\, \vec{u}) = \nabla \cdot (k \nabla T) - \nabla \cdot (p \vec{u}) + \nabla \cdot (\tau \cdot \vec{u}) + \rho\, \vec{g} \cdot \vec{u} \end{cases} \tag{8}$$

where ρ is the density of the fluid, $\vec{u}$ the velocity vector, p the pressure, T the temperature, E the total specific energy, k the thermal conductivity, τ is the viscous stress tensor in which the dynamic viscosity μ is hidden and $\vec{g}$ the gravity acceleration. In literature, both laminar and turbulent models have been implemented, however a RANS (Reynolds-Averaged Navier Stokes) approach will be used, along with suitable closure equations: in particular, a $k - \omega\ SST$ (Shear Stress Tensor) model is used [29]. This choice has been driven by the fact that the problem is more reducible, namely the POD eigenvalues decreases more rapidly ([4, 32]) ensuring a lower Kolmogorov *n*-th width [20].

For the solid region, the heat diffusion equation will be solved

$$\frac{\partial (\rho c_p T)}{\partial t} = \nabla \cdot (k \nabla T) + q''' \tag{9}$$

where c_p is the specific heat capacity and q''' the volumetric heat source. The thermophysical properties for water (fluid region) and stainless steel (solid region) are expressed as functions of the temperature T using polynomials of different degrees[5].

In both sets of equations, the volumetric heat source term is present for sake of generality, however in DYNASTY heat generation is only inside the solid. The DYNASTY facility provides the thermal power through stripes placed on the external surface of GV1, GV2 and GO, but in the mathematical model, a volumetric heat source in the correspondent solid regions will be implemented.

[5] The water properties have been fitted starting from the XSteam library in MATLAB, based on IAPWS IF-97, given the system to operate at atmospheric pressure.

4.2.1. Heat Generation Modelling

As already mentioned, the experimental facility has electrical resistors that provides power on three out of four legs. In the numerical simulation, this condition can be equivalently imposed with a volumetric heat source in the regions called *heat_dwn*, *heat_dx* and *heat_sx* **(Figure 2)**. In OpenFOAM, such condition can be imposed with a *fvOptions* additional file, implementing the *scalarSemiImplicitSource* routine so that the power per each leg can be imposed.

The maximum power that can be provided is 5.3 kW, but this value does not consider the thermal dispersion to the environment (as in the current configuration of DYNASTY does not have thermal insulation). Using the experimental data collected in [31], the net value of the power provided can be approximated with a simple energy balance at the end of the transient: *heat_dwn* provides 260 W, *heat_dx* 750 W and *heat_sx* 1150 W.

4.2.2. Initial and Boundary Conditions

At the beginning, the velocity and the pressure are imposed equal to zero everywhere, whereas the temperature is uniform and set equal to the room temperature $24\ °C$. For what concerns the boundary conditions on the fluid region, a no-slip condition for the velocity is imposed on the boundaries, and the thermal coupling between the solid is established by imposing the continuity of temperature and heat flux at the interfaces. The same idea is also applied when two solid regions are in contact. In the end, the external surface is considered adiabatic except for the cooler, where a Robin boundary condition is imposed and where the heat transfer coefficient with the environment is defined using semi-empirical correlations [33].

4.2.3. Numerical Discretization

The domain Ω is composed by two materials, solid and fluid. Moreover, the solid region has been further divided in subregions to reflect the physical configuration of DYNASTY, namely *chimney*, *cool*, *heat_dwn*, *heat_dx* and *heat_sx*. The mesh has been defined in [30], displayed in **Figure *3***, and the total number of cells is around 10^6. Indeed, the mesh size is quite large, and this must be considered when dealing with the generation of the sensors for the GEIM and the PBDW (as the sensor generation step is quite memory-consuming). This model has been solved in OpenFOAM, using the built-in coupled solver *chtMultiRegionFoam*.

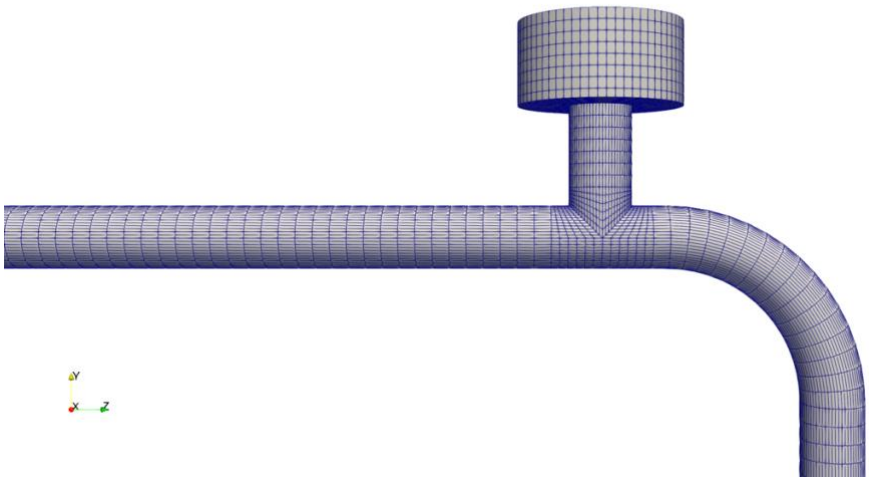

Figure 3: zoom on the chimney of DYNASTY mesh.

The fact that the mesh is divided into different regions, impacts the implementation of the MOR methods

because it is not easy to define functions on the different regions. Let g be a normalized Gaussian, so the general expression of a sensor for the temperature is the following

$$v(\,T(\vec{x});\ \vec{x}_k, s) = \int_\Omega T(\vec{x}) \cdot g(\vec{x} - \vec{x}_k;\ s)\, d\Omega \qquad with \quad \int_\Omega g(\vec{x} - \vec{x}_k;\ s)\, d\Omega = 1 \tag{10}$$

where $\vec{x}_k$ is the centre of mass and s is the point-spread (the standard deviation of the Gaussian itself). Due to implementation issue, mentioned above, it has been assumed that the sensors/functionals act only on the region of their centre of mass, namely the integral is restricted to a portion of the domain Ω (the complete discussion is reported in [32]). This may be a limitation when the point spread is high, however, the system is quite large, hence if two sensors aren't close this assumption is not so limiting. It will be a matter of future developments to overcome this simplifying hypothesis.

4.3. Offline Stage

At first, the Train Set and the Test Set are built using time as parameter and they are defined as follows

$$\Xi_{\text{train}} = [0{:}\,10{:}\,2900] \qquad \Xi_{\text{test}} = [5{:}\,10{:}\,2895]. \tag{11}$$

Only the temperature field is going to be analysed. Since this case is multi-regional, the sensors will be defined only on the specific region, namely *fluid*, *heat_dx* and *heat_sx*, to mimic the experimental setup: the thermocouples are placed in these regions. The library $\Upsilon = \{v(\,\cdot\,;\ \vec{x}_k, s)\}_{k=1}^{N_h}$, with point spread $s^2 = 10^{-4}$ (this value is used, following the sensitivity analysis in [32]), has N_h elements (i.e., the sum of the cells belonging to each sensor region), however this size is too large compared to the available computational resources. Moreover, in the real experimental facility the 4 fluid thermocouples are fixed, whereas the solid ones could be moved on the external boundary. Based on the experimental setup, the maximum number of fluid sensors is 4 and their positions are fixed; on the other hand, the solid sensors for *heat_dx* and *heat_sx* will be limited only on the external surface. This configuration will be referred to as *Free Solid Sensors*.

Before analysing the generation of the reduced spaces by the different algorithms, the following error notation must be introduced: let $\epsilon(\vec{x}; M, \mu)$ be the relative error associated to the field $T^{true}(\vec{x};\ \mu)$, defined as

$$\epsilon(\vec{x}; M, \mu) = \frac{T^{true}(\vec{x};\ \mu) - P_M[T^{true}(\,\cdot\,;\ \mu)](\vec{x})}{\|T^{true}(\vec{x};\ \mu)\|_{L^2(\Omega)}}, \tag{12}$$

where P_M is an operator which takes as input the true field and returns the reconstructed one using M sensors/basis functions[6].

4.3.1. Construction of the reduced spaces

The reduced space is of primary importance when dealing with MOR methods, because it consists in the basic source of information which is later corrected/updated by the data. In this work the reduced spaces built with GEIM and the WeakGreedy algorithm (adopted for the PBDW) are compared with the one constructed by POD: it can be theoretically proved that POD is able to produce the optimal basis, when measuring the error (Eq. 12) in the L2-norm [3].

[6] For GEIM the number of sensors and basis number employed are the same, but for PBDW, in the online stage, the dimension of the adopted basis is usually fixed (N) and the varying parameter is the dimension of the update space U_M.

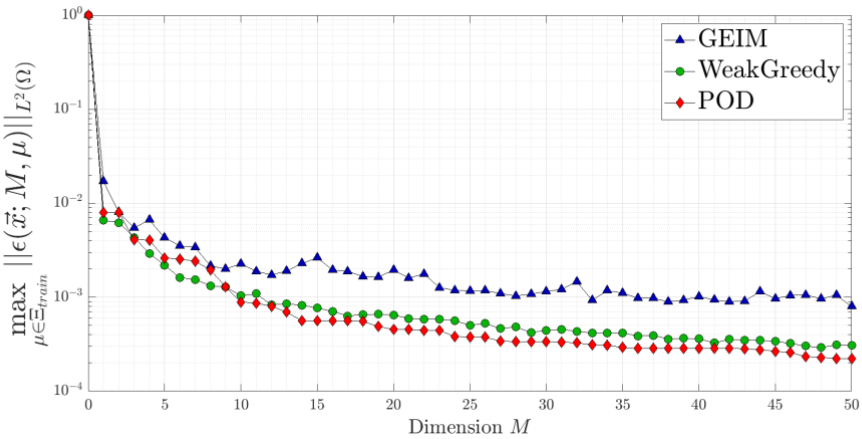

Figure 4: Maximum relative reconstruction error on the Train Set for the different algorithms.

The WeakGreedy algorithm has a Train Set relative error which is comparable with the POD, whereas the GEIM is a bit less performant, even though considering $M = 10$ magic functions results in an error $\approx 10^{-3}$. Therefore, both methods can be considered reliable tools to accurately describe the Train Set.

4.4. Online Stage

In this work only synthetic data are going to be considered: this step is typically performed to preliminarily assess the efficiency of these methods, however compared to literature this work deals with a real physical system instead of benchmark cases. The validation with real experimental data will be a matter of future works. The synthetic data are polluted by random noise, in particular $\sigma = 1\ K$: this value is large, and it has been chosen to assess the performance of the methods in an unpleasant situation[7]. Since synthetic data are considered, the true solution is available and it can be compared with the reconstruction performed by GEIM (or TR-GEIM) and PBDW[8], thus the same error definition of Eq. (12) is used.

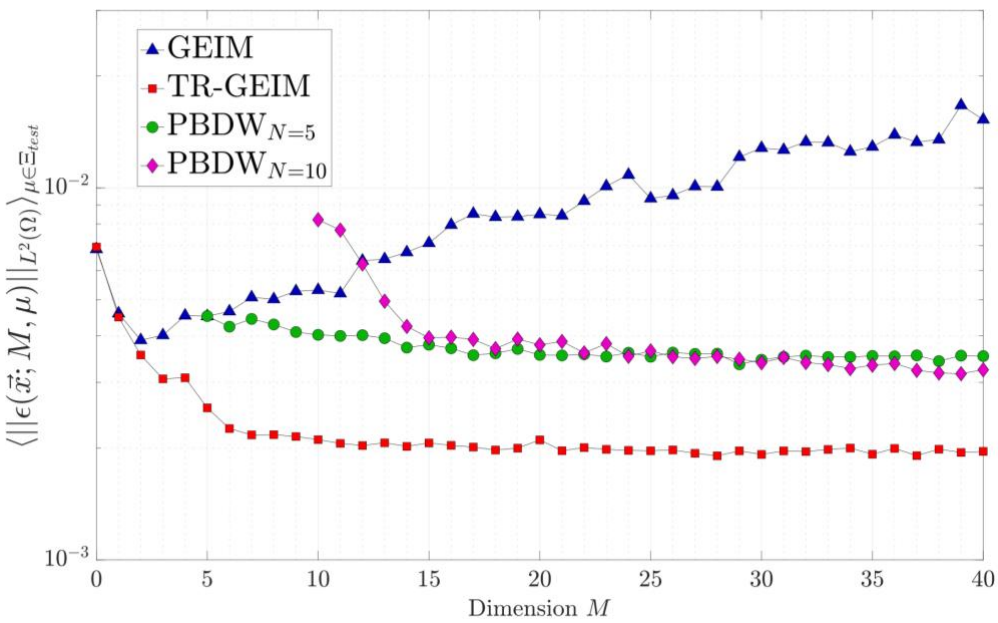

Figure 5: Comparison between the different methods with noise level $\sigma = 1\ K$.

[7] This value has been taken as example since a similar degree of uncertainty is present in MSFR.
[8] If real experimental data were considered, some additional thermocouples can be exploited as a comparison.

Figure *5* shows the relative reconstruction error for the different methods: GEIM, TR-GEIM and PBDW (considering two different dimensions of its reduced space). The instability of GEIM comes into play when data are polluted by random noise, as theoretically proved by [22], hence the necessity of stabilization techniques. On the other hand, PBDW shows no instability issues and good reconstructions are obtained. Interestingly, increasing the dimension of the reduced space doesn't considerably improve the estimation.

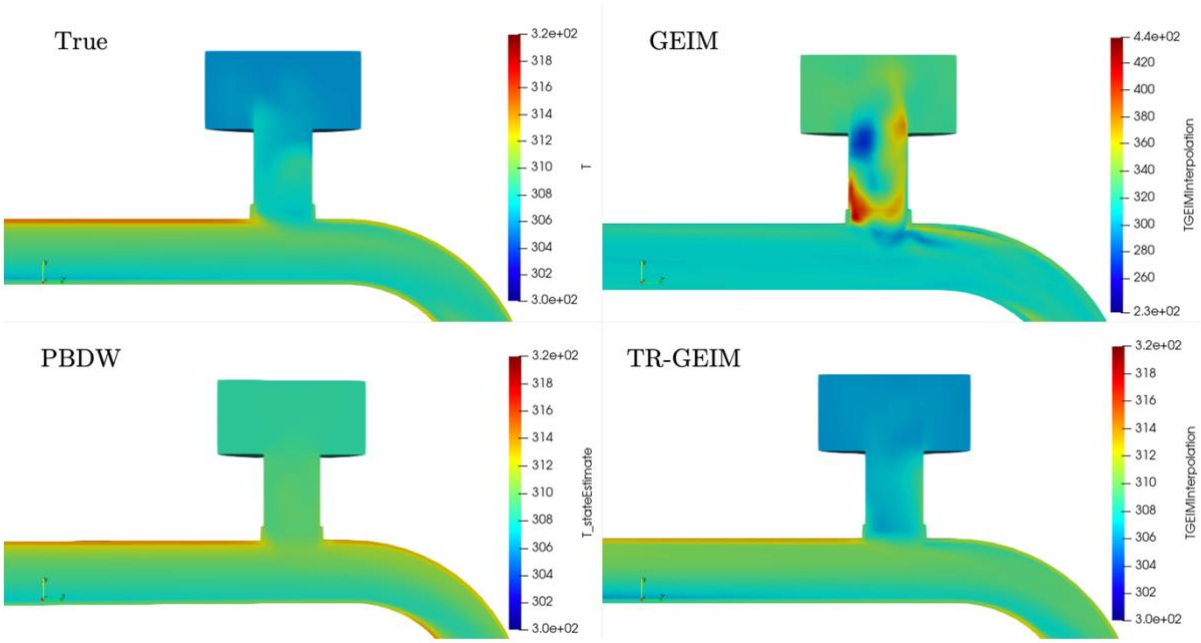

Figure 6: comparison of the temperature field for the different HDA methods.

Figure *6* shows a comparison of the HDA methods plotting the temperature field on a portion of the domain, near the *chimney* region, selected as an example since no sensors are available there and the flow is expected to have some recirculation to and from the *chimney*. Here, GEIM shows its unstable behaviour as predicted by ***Figure 5***, whereas TR-GEIM and PBDW well approximate the true solution. This occurs because, as per mathematical formulation, GEIM is unstable when data are polluted by random noise.

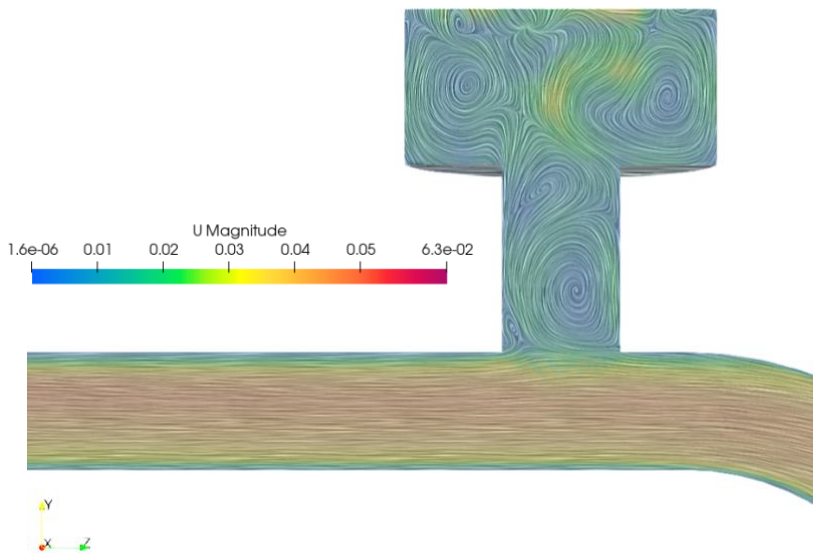

Figure 7: Streamlines (using the Line Integral Contour representation) near the chimney.

Figure *7* shows that at the base of the *chimney* the flow is more complicated compared to the rest of the DYNASTY loop, which is almost 1D, this instability is accentuated. The reason for this instability is two-fold: 1) there is global numerical instability (as underlined in ***Figure 5***) when GEIM is used with data polluted by random noise; 2) there is also a local instability caused by the complexness of the flow compared to the rest of the system, and the GEIM is not able to extract from the available sensors enough information to interpolate the flow in this region. A possible way to overcome this problem could be the addition of an additional sensor at the base of the *chimney*, if possible, to give GEIM more data (although this possibility depends on the physical system and the availability of sensors).

In the end, TR-GEIM results are, by far, the best ones in terms of reconstruction error; moreover, the associated linear system size is always lower than the PBDW one, hence TR-GEIM is associated to a lower computational cost. From this test case, it seems that TR-GEIM should be preferred compared to GEIM and PBDW, however more analysis and applications to different study cases are required to give a definitive conclusion. On the contrary, GEIM should be avoided any time random noise is involved.

Table 1 shows a comparison of the computational cost of the linear system, for the online phase. The GEIM algorithm requires a lower number of operations, due to the fact that the matrix is lower triangular [14].

Table 1: comparison of the computational cost of the Online Phase.

Algorithm	Linear System Size	Computational Cost
GEIM	$M \times M$	$O(M^2)$
TR-GEIM	$M \times M$	$O(M^3)$
PBDW	$(N+M) \times (N+M)$	$O([N+M]^3)$

5. CONCLUSIONS

In this work, the Generalized Empirical Interpolation Method and the Parametrized-Backward Data-Weak formulation have been applied to the DYNASTY experimental facility, built at Politecnico di Milano, even though only synthetic data have been considered. These methods are hybrid data assimilation techniques, in which Model Order Reduction is coupled with Data Assimilation, conceived to combined theoretical modelling and experimental observations. They aim at updating the knowledge of the model with real evaluation of the fields.

For what concerns the results for DYNASTY, only synthetic data have been considered, thus these results must be taken as preliminary; future works will focus on a deep validation of the techniques with real experimental data. The obtained results are nearly optimal for both GEIM and PBDW, even though the GEIM algorithm, in particular its regularized version, shows superior results in terms of reconstruction error on the Test Set. If not stabilized, the GEIM algorithm is highly affected by random noise and an unbounded error is achieved. The PBDW can provide a good reconstruction of the physical system, however adding more and more sensors doesn't decrease too much the global reconstruction error; specifically, the correction/update is more localized near the experimental sensor. Moreover, the PBDW has an important limitation given by its mathematical formulation: in fact, the number of employed sensors can never be lower than the dimension of the reduced space.

In the future, it will be important to further assess the reliability of these methods considering real experimental data, as well as testing them on different study case to assess their applicability and overall performance.

NOMENCLATURE

β_m	:	m-th coefficient of the GEIM interpolant
q_m	:	m-th magic function
v_m	:	m-th sensor/functional
g_m	:	m-th sensor representation
y_m	:	m-th measurement
u	:	Generic snapshot
z	:	Generic element of the reduced space
$\mathrm{I_M}$	:	GEIM interpolant with M magic functions
A	:	PBDW sensors matrix
B	:	GEIM matrix
K	:	PBDW sensor-reduced basis function matrix
M	:	Number of sensors
N	:	Number of basis functions
T	:	Tikhonov matrix in TR-GEIM
Υ	:	Library of sensors
ϵ	:	Relative reconstruction error
ε	:	Random noise
γ	:	Generic element of the Update Space
λ	:	TR-GEIM regularizing parameter
σ	:	Noise Level
Ξ	:	Sample space of the parameter space
ζ_n	:	n-th reduced basis function of PBDW
CFD	:	Computational Fluid Dynamics
DA	:	Data Assimilation
DYNASTY	:	DYnamics of Natural circulation for molten SalT internallY heated
FOM	:	Full Order Model
GEIM	:	Generalized Empirical Interpolation Method
HDA	:	Hybrid Data Assimilation
MOR	:	Model Order Reduction
MSFR	:	Molten Salt Fast Reactor
ODE	:	Ordinary Differential Equation
PBDW	:	Parametrized-Background Data-Weak formulation
PDE	:	Partial Differential Equation
POD	:	Proper Orthogonal Decomposition
RANS	:	Reynolds-Averaged Navier Stokes equations
TR-GEIM	:	Tikhonov Regularized - GEIM

REFERENCES

[1] W. Schilders, H. der Vorst, and J. Rommes, *Model Order Reduction: Theory, Research Aspects and Applications*, vol. 13. Springer-Verlag Berlin Heidelberg, 2008.

[2] H. K. Versteeg and W. Malalasekera, *An Introduction to Computational Fluid Dynamics: The Finite Volume Method*. Pearson Education Limited, 2007.

[3] J. Hesthaven, G. Rozza, and B. Stamm, *Certified Reduced Basis Methods for Parametrized Partial Differential Equations*. Springer International Publishing, 2016.

[4] A. Quarteroni, A. Manzoni, and F. Negri, *Reduced basis methods for partial differential equations: An introduction*. 2015.

[5] S. L. Brunton and J. N. Kutz, *Data-Driven Science and Engineering: Machine Learning, Dynamical Systems, and Control*, 1st ed. USA: Cambridge University Press, 2019.

[6] A. Carrassi, M. Bocquet, L. Bertino, and G. Evensen, "Data assimilation in the geosciences: An overview of methods, issues, and perspectives," *WIREs Clim. Chang.*, vol. 9, no. 5, p. e535, 2018,

doi: https://doi.org/10.1002/wcc.535.

[7] A. Quarteroni and G. Rozza, "Numerical solution of parametrized Navier-Stokes equations by reduced basis methods," *Numer. Methods Partial Differ. Equ.*, vol. 23, 2007, doi: 10.1002/num.20249.

[8] S. Lorenzi, A. Cammi, L. Luzzi, and G. Rozza, "POD-Galerkin method for finite volume approximation of Navier-Stokes and RANS equations," *Comput. Methods Appl. Mech. Eng.*, vol. 311, 2016, doi: 10.1016/j.cma.2016.08.006.

[9] L. Cordier and M. Bergmann, "Proper Orthogonal Decomposition: an overview," in *Lecture series 2002-04, 2003-03 and 2008-01 on post-processing of experimental and numerical data, Von Karman Institute for Fluid Dynamics, 2008.*, VKI, 2008, p. 46 pages.

[10] A. Chatterjee, "An introduction to the proper orthogonal decomposition," *Curr. Sci.*, vol. 78, no. 7, pp. 808–817, 2000, [Online]. Available: http://www.jstor.org/stable/24103957.

[11] S. Lorenzi, A. Cammi, L. Luzzi, and G. Rozza, "A reduced order model for investigating the dynamics of the Gen-IV LFR coolant pool," *Appl. Math. Model.*, vol. 46, 2017, doi: 10.1016/j.apm.2017.01.066.

[12] L. Vergari, A. Cammi, and S. Lorenzi, "Reduced order modeling approach for parametrized thermal-hydraulics problems: inclusion of the energy equation in the POD-FV-ROM method," *Prog. Nucl. Energy*, vol. 118, p. 103071, 2020, doi: 10.1016/j.pnucene.2019.103071.

[13] Y. Maday and O. Mula, "A Generalized Empirical Interpolation Method: Application of Reduced Basis Techniques to Data Assimilation," *Springer INdAM Ser.*, pp. 221–235, 2013, doi: 10.1007/978-88-470-2592-9_13.

[14] Y. Maday, O. Mula, A. T. Patera, and M. Yano, "The Generalized Empirical Interpolation Method: Stability theory on Hilbert spaces with an application to the Stokes equation," *Comput. Methods Appl. Mech. Eng.*, vol. 287, pp. 310–334, 2015, doi: 10.1016/j.cma.2015.01.018.

[15] Y. M. Maday Yvon, Patera Anthony, Penn J, "Parametrized-Background Data-Weak Formulation for Real-Time (In-Situ) State Estimation," 2014.

[16] Y. Maday, A. Patera, J. Penn, and M. Yano, "A parameterized-background data-weak approach to variational data assimilation: formulation, analysis, and application to acoustics," *Int. J. Numer. Methods Eng.*, vol. 102, 2014, doi: 10.1002/nme.4747.

[17] T. Taddei, "Model order reduction methods for data assimilation; state estimation and structural health monitoring," Massachusetts Institute of Technology, 2016.

[18] A. Cammi, M. T. Cauzzi, L. Luzzi, and A. Pini, "DYNASTY: An Experimental Loop for the Study of Natural Circulation with Internally Heated Fluids," *Proc. 12th Int. Conf. Heat Transf. Fluid Mech. Thermodyn.*, pp. 1159–1164, 2016, [Online]. Available: https://re.public.polimi.it/handle/11311/1013906#.YI2qZQ7ptIM.mendeley.

[19] A. Pini, A. Cammi, M. Cauzzi, F. Fanale, and L. Luzzi, "An Experimental Facility to Investigate the Natural Circulation Dynamics in Presence of Distributed Heat Sources," *Energy Procedia*, vol. 101, pp. 10–17, 2016, doi: https://doi.org/10.1016/j.egypro.2016.11.002.

[20] M. Bachmayr and A. Cohen, "Kolmogorov widths and low-rank approximations of parametric elliptic PDEs," *Math. Comput.*, 2016, doi: https://doi.org/10.1090/mcom/3132.

[21] Y. Maday, O. Mula, and G. Turinici, "Convergence analysis of the Generalized Empirical Interpolation Method," *SIAM J. Numer. Anal.*, vol. 54, no. 3, pp. 1713–1731, Jan. 2016, doi: 10.1137/140978843.

[22] J.-P. Argaud, B. Bouriquet, H. Gong, Y. Maday, and O. Mula, "Stabilization of (G)EIM in Presence of Measurement Noise: Application to Nuclear Reactor Physics," 2017, pp. 133–145.

[23] C. Introini, A. Cammi, S. Cavalleri, S. Lorenzi, and S. Riva, "Stabilisation of Generalized Empirical Interpolation Method (GEIM) in presence of noise: a novel approach based on Tikhonov regularization," *Submitt. to Comput. Methods Appl. Mech. Eng.*, 2022.

[24] Y. Maday and T. Taddei, "Adaptive PBDW Approach to State Estimation: Noisy Observations; User-Defined Update Spaces," *SIAM J. Sci. Comput.*, vol. 41, no. 4, pp. B669–B693, Jul. 2019, doi: 10.1137/18M116544X.

[25] C. Prud'homme, D. V. Rovas, K. Veroy, and A. T. Patera, "A mathematical and computational framework for reliable real-time solution of parametrized partial differential equations," *Math. Model. Numer. Anal.*, vol. 36, no. 5, pp. 747–771, 2002, doi: 10.1051/m2an:2002035.

[26] Maday, Yvon, T, Anthony, Penn, James D, and Yano, Masayuki, "PBDW State Estimation: Noisy

Observations; Configuration-Adaptive Background Spaces; Physical Interpretations," *ESAIM: Proc.*, vol. 50, pp. 144–168, 2015, doi: 10.1051/proc/201550008.

[27] Generation IV International Forum, "Technology Roadmap Update for Generation IV Nuclear Energy Systems." 2014.

[28] H. G. Weller, G. Tabor, H. Jasak, and C. Fureby, "A Tensorial Approach to Computational Continuum Mechanics using Object-Oriented Techniques," *Comput. Phys.*, vol. 12, no. 6, pp. 620–631, 1998, doi: 10.1063/1.168744.

[29] M. T. Cauzzi, "Modelling and Experimental Investigation of Natural Circulation in Presence of Distributed Heating," Politecnico di Milano, Italy, 2019.

[30] A. Battistini, A. Cammi, S. Lorenzi, M. Colombo, and M. Fairweather, "Development of a CFD – LES model for the dynamic analysis of the DYNASTY natural circulation loop," *Chem. Eng. Sci.*, vol. 237, p. 116520, 2021, doi: https://doi.org/10.1016/j.ces.2021.116520.

[31] G. Benzoni, "Natural Circulation modeling and experimental validation of the DYNASTY facility," Politecnico di Milano, Italy, 2020.

[32] S. Riva, "Reduced basis methods for data assimilation in real thermal hydraulics systems," Politecnico di Milano, 2021.

[33] F. P. Incropera, T. L. Bergman, A. S. Lavine, and D. P. Dewitt, *Fundamentals of Heat and Mass Transfer*, vii. John Wiley & Sons, Ltd, 2011.

[34] A. Ferrero, F. Gazzola, and M. Zanotti, *Elementi di analisi superiore per la fisica e l'ingegneria*, iii. Società Editrice Esculapio, 2015.