Electronic Balances
Page 905-909

Explosion Proof Electronic Balances
Page 909

Weighing Scales
Page 910/912

Counting Scales
Page 911

Electronic Pocket Scales
Page 911-912

Platform Scales
Page 913

Floor Scales
Page 914

Electronic Crane Scales
Page 915-917

Moisture Analyzers
Page 918

Weights
Page 919-920

VIDEO

DATA OUTPUT

ELECTRONIC BALANCES (0.1mg)

printer (**optional**)

calibration weight
(included in **8310-120M**, **8310-210M** and **8310-320M**)

8310-320A

- Rear electromagnetic sensor
- Separated display unit and weighing unit, reduce vibration error
- Digital processing technology improves reading stability and response speed for micro sample addition, sample weight and balance reading is consistent
- Unit: g, oz, ct, lb
- Weighing, counting, taring, percentage
- Data output

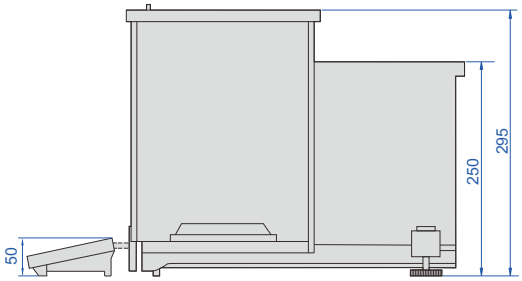

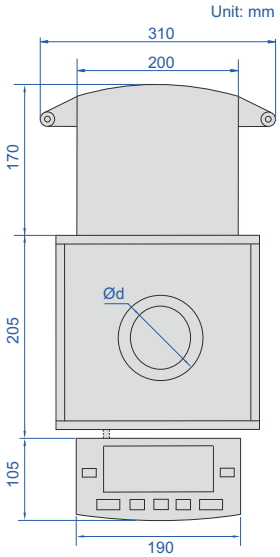

SPECIFICATION

Code	8310-120M	8310-210M	8310-320M	8310-120A	8310-210A	8310-320A
Calibration	external calibration			internal calibration		
Maximum weighing	120g	210g	320g	120g	210g	320g
Minimum weighing	10mg	10mg	10mg	10mg	10mg	10mg
Resolution (d)	0.1mg	0.1mg	0.1mg	0.1mg	0.1mg	0.1mg
Verification interval (e)	1mg	1mg	1mg	1mg	1mg	1mg
Accuracy (m is load)	m≤50g: ±0.5mg; 50g<m≤200g: ±1mg; m>200g: ±1.5mg			m≤50g: ±0.5mg; 50g<m≤200g: ±1mg; m>200g: ±1.5mg		
Repeatability	±0.1mg					
Linearity	±0.1mg					
Stabilization time	2.5s					
Weighing pan size (Ød)	Ø90mm					
Output	RS232					
Operation temperature	10~30°C					
Operation humidity	20~85% RH					
Power supply	power adapter (12V/2A)					
Dimension (L×W×H)	480×310×320mm					
Weight	6kg					

OPTIONAL ACCESSORY

RS232 cable	8304-CABLE *
Printer	8303-PRINTER

*Used to connect with computers

ELECTRONIC BALANCES (0.1mg)

DATA OUTPUT

8304-120

calibration weight (included)

printer (**optional**)

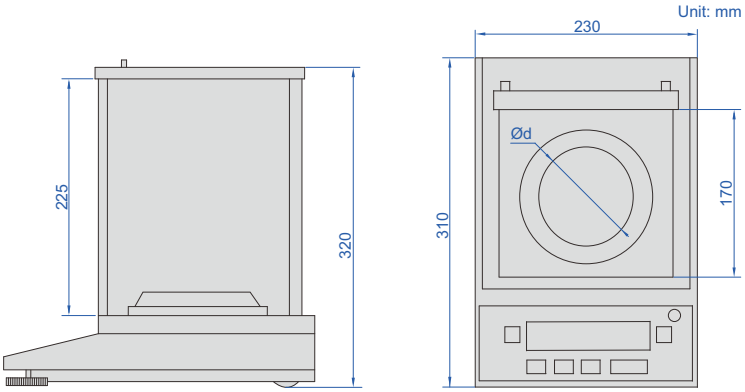

- Electromagnetic sensor
- Unit: g, ct, oz, lb
- Weighing, counting, taring
- Data output

SPECIFICATION

Code	8304-120	8304-220
Maximum weighing	120g	220g
Minimum weighing	10mg	10mg
Resolution (d)	0.1mg	0.1mg
Verification interval (e)	1mg	1mg
Accuracy (m is load)	m≤50g: ±0.5mg; 50g<m≤120g: ±1mg	m≤50g: ±0.5mg; 50g<m≤200g: ±1mg; m>200g: ±1.5mg
Weighing pan size (Ød)	Ø90mm	
Operation temperature	10~30°C	
Operation humidity	20~85% RH	
Power supply	power adapter (12V/2A)	
Dimension (L×W×H)	230×310×320mm	

OPTIONAL ACCESSORY

RS232 cable	8304-CABLE *
Printer	8303-PRINTER
Data output cable (keyboard format)	**7302-8304** page 14

*Used to connect with computers

DATA OUTPUT

ELECTRONIC BALANCES (1mg)

8303-520

calibration weight (included)

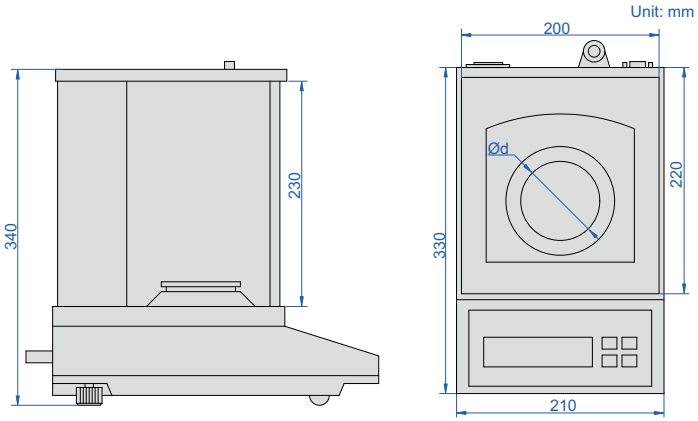

- Aluminum alloy shell, wind shield, three side glass sliding doors
- Electromagnetic balance sensor
- Unit: g, ct, ozt, oz, gn, dwt, mg
- Weighing, counting, taring
- Data output
- With a hook at the bottom

SPECIFICATION

Code	8303-220	8303-320	8303-520	8303-620	8303-1020
Maximum weighing	220g	320g	520g	620g	1020g
Minimum weighing	20mg	20mg	100mg	100mg	100mg
Resolution (d)	1mg	1mg	1mg	1mg	1mg
Verification interval (e)	10mg	10mg	10mg	10mg	10mg
Accuracy	load capacity≤500g: ±5mg; load capacity>500g: ±10mg				
Weighing pan size (Ød)	Ø80mm				Ø120mm
Operation temperature	15~30°C		18~23°C		
Operation humidity	40%~80% RH		50%~70% RH		
Power supply	220V, 50/60Hz				
Dimension (L×W×H)	330×210×340mm				

OPTIONAL ACCESSORY

RS232 cable	8301-CABLE *
Printer	8303-PRINTER

*Used to connect with computers

printer (**optional**)

ELECTRONIC BALANCES (0.01g)

DATA OUTPUT

VIDEO

8305-5000

- LCD with back light
- Unit: g, ct, ozt, oz, GN, dwt, lb, kg
- Weighing, counting, taring

calibration weight
(included in **8305-2000** and **8305-3000**)

Unit: mm

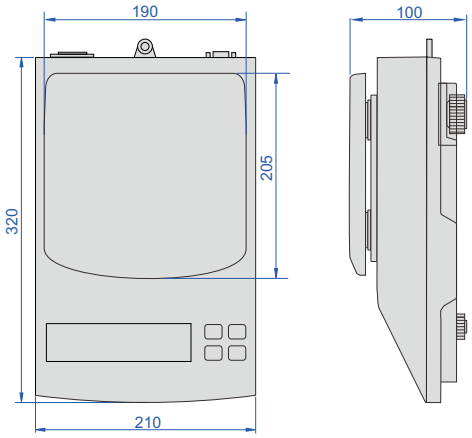

SPECIFICATION

Code	8305-2000	8305-3000	8305-5000	8305-6000
Maximum weighing	2kg	3kg	5kg	6kg
Minimum weighing	0.2g	0.2g	0.2g	0.2g
Resolution (d)	0.01g	0.01g	0.01g	0.01g
Verification interval (e)	0.1g	0.1g	0.1g	0.1g
Accuracy (m is load)	m≤0.5kg: ±0.05g; 0.5kg<m≤2kg: ±0.1g	m≤0.5kg: ±0.05g; 0.5kg<m≤2kg: ±0.1g m>2kg: ±0.15g	m≤0.5kg: ±0.05g; 0.5kg<m≤2kg: ±0.1g m>2kg: ±0.15g	m≤0.5kg: ±0.05g; 0.5kg<m≤2kg: ±0.1g m>2kg: ±0.15g
Weighing pan size	190×205mm			
Output	RS232			
Operation temperature	0~40°C			
Operation humidity	≤80% RH			
Power supply	220V, 50/60Hz			
Dimension (L×W×H)	320×210×100mm			

OPTIONAL ACCESSORY

RS232 cable	**8301-CABLE***
Printer	**8303-PRINTER**
Data output cable (keyboard format)	**7302-8001** page 14
Wireless transmitter (need receiver)	**7315-8301** page 6

*Used to connect with computers

printer (**optional**)

DATA OUTPUT | Ex

EXPLOSION PROOF ELECTRONIC BALANCES

8105-30KG

- LCD display, with backlight
- Zero-setting, subtracting tare value, counting
- Unit: g, ct, oz, lb, ozt

Unit: mm

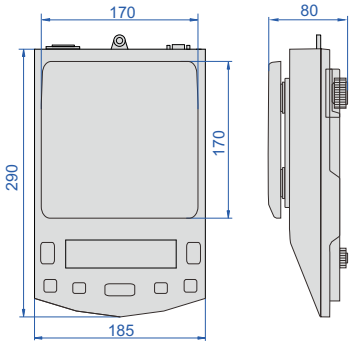

SPECIFICATION

Code	8105-5KG	8105-30KG
Maximum weighing	5kg	30kg
Minimum weighing	0.5g	5g
Resolution (d)	0.01g	0.1g
Verification interval (e)	0.1g	1g
Accuracy (m is load)	m≤0.05kg: ±0.05g; 0.05kg≤m≤0.2kg: ±0.1g; 0.2kg≤m≤5kg: ±0.15g	m≤0.5kg: ±0.5g; 0.5kg≤m≤2kg: ±1.0g; m>2kg: ±1.5g
Dimension of pan	170×170mm	
Output	RS232	
Operation temperature	15~30°C	
Operation humidity	40%~80% RH	
Power	explosion-proof battery, DC7.4V/4.0Ah	
Dimension (L×W×H)	290×185×80mm	

OPTIONAL ACCESSORY

RS232 cable	8105-CABLE*

*Used to connect with computers

DATA OUTPUT

ELECTRONIC BALANCES

- Automatic zero when power on
- Unit: g (gram), ct (carat), ozt (troy ounce)
- Weighing, counting, taring
- Overload alarm
- Data output

8301-3000

windshield (included in **8301-300**, **8301-600** and **8301-1200**)

calibration weight (included in **8301-300**, **8301-600** and **8301-1200**)

Unit: mm

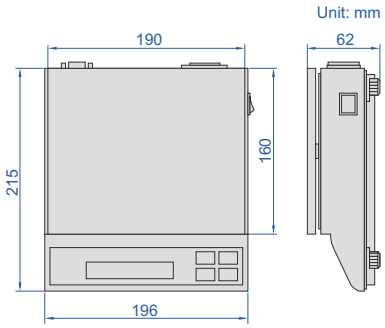

SPECIFICATION

Code	8301-300	8301-600	8301-1200	8301-3000	8301-6000
Maximum weighing	300g	600g	1200g	3000g	6000g
Minimum weighing	0.2g	0.2g	0.2g	2g	2g
Resolution (d)	0.01g	0.01g	0.01g	0.1g	0.1g
Verification interval (e)	0.1g	0.1g	0.1g	1g	1g
Accuracy (m is load)	m≤50g: ±0.05g; 50g<m≤200g: ±0.1g; m>200g: ±0.15g			m≤500g: ±0.5g; 500g<m≤2000g: ±1g; m>2000g: ±1.5g	
Weighing pan size	Ø135mm			190×160mm	
Operation temperature	0~40°C				
Operation humidity	≤80% RH				
Power supply	220V, 50/60Hz				
Dimension (L×W×H)	215×196×62mm				

OPTIONAL ACCESSORY

RS232 cable	8301-CABLE
Data output cable (keyboard format)	7302-8001 page 14
Wireless transmitter (need receiver)	7315-8301 page 6

WEIGHING SCALES (OIML CERTIFICATE)

- LCD display, with backlight
- Zero-setting, subtracting tare value
- Overload alarm
- Automatic power off
- OIML certificate (No. 0200-NAWI-04601)

8002-30M

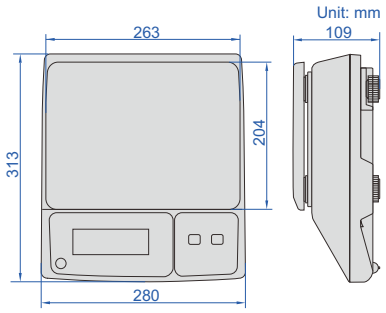

SPECIFICATION

Code	8002-6M	8002-15M	8002-30M	8002-6MD	8002-15MD	8002-30MD
Maximum weighing	3/6kg	6/15kg	15/30kg	3/6kg	6/15kg	15/30kg
Minimum weighing	20g	40g	100g	20g	40g	100g
Resolution (d)	1/2g	2/5g	5/10g	1/2g	2/5g	5/10g
Verification interval (e)	2g	5g	10g	2g	5g	10g
Accuracy (m is load)	m≤3kg: ±1g 3kg<m≤6kg: ±2g	m≤6kg: ±2g 6kg<m≤15kg: ±5g	m≤15kg: ±5g 15kg<m≤30kg: ±10g	m≤3kg: ±1g 3kg<m≤6kg: ±2g	m≤6kg: ±2g 6kg<m≤15kg: ±5g	m≤15kg: ±5g 15kg<m≤30kg: ±10g
Output	no			RS232		
Operation temperature	-10~40°C					
Power	rechargeable battery (6V/3.2Ah), power adapter (12V/500mA)					
Dimensions of pan	263×204mm					

WEIGHING SCALES (HIGH PRECISION)

printer (**optional**)

- LCD display, with backlight
- Zero-setting, subtracting tare value
- Overload alarm
- Automatic power off

8001-30

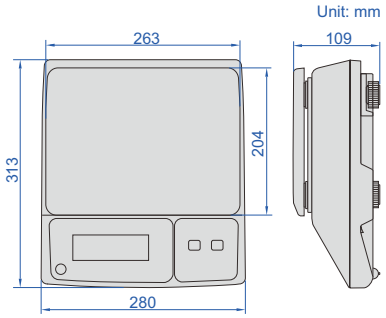

SPECIFICATION

Code	8001-6	8001-15	8001-30	8001-6D	8001-15D	8001-30D
Maximum weighing	6kg	15kg	30kg	6kg	15kg	30kg
Minimum weighing	4g	10g	20g	4g	10g	20g
Resolution (d)	0.2g	0.5g	1g	0.2g	0.5g	1g
Accuracy (m is load)	m≤1kg: ±1g 1kg<m≤4kg: ±2g m>4kg: ±3g	m≤2.5kg: ±2.5g 2.5kg<m≤10kg: ±5g m>10kg: ±7.5g	m≤5kg: ±5g 5kg<m≤20kg: ±10g m>20kg: ±15g	m≤1kg: ±1g 1kg<m≤4kg: ±2g m>4kg: ±3g	m≤2.5kg: ±2.5g 2.5kg<m≤10kg: ±5g m>10kg: ±7.5g	m≤5kg: ±5g 5kg<m≤20kg: ±10g m>20kg: ±15g
Units	kg, lb			kg		
Output	no			RS232		
Operation temperature	-10~40°C					
Power	rechargeable battery (6V/3.2Ah), power adapter (12V/500mA)					
Dimensions of pan	263×204mm					

OPTIONAL ACCESSORY (for scales with RS232)

Printer	8001-PRINTER
Data output cable (keyboard format)	**7302-8001** page 14

COUNTING SCALES

printer (**optional**)

- LCD display, with backlight
- Zero-setting, subtracting tare value, counting, accumulation, checking alarm
- Overload alarm
- Units: kg, g, lb, tj, hj, lb-oz

8101-30

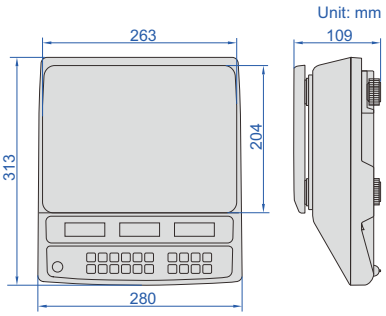

SPECIFICATION

Code	8101-6	8101-15	8101-30	8101-6D	8101-15D	8101-30D
Maximum weighing	6kg	15kg	30kg	6kg	15kg	30kg
Minimum weighing	4g	10g	20g	4g	10g	20g
Resolution (d)	0.2g	0.5g	1g	0.2g	0.5g	1g
Accuracy (m is load)	m≤1kg: ±1g 1kg<m≤4kg: ±2g m>4kg: ±3g	m≤2.5kg: ±2.5g 2.5kg<m≤10kg: ±5g m>10kg: ±7.5g	m≤5kg: ±5g 5kg<m≤20kg: ±10g m>20kg: ±15g	m≤1kg: ±1g 1kg<m≤4kg: ±2g m>4kg: ±3g	m≤2.5kg: ±2.5g 2.5kg<m≤10kg: ±5g m>10kg: ±7.5g	m≤5kg: ±5g 5kg<m≤20kg: ±10g m>20kg: ±15g
Output	no			RS232		
Operation temperature	-10~40°C					
Power	rechargeable battery (6V/3.2Ah), power adapter (12V/500mA)					
Dimensions of pan	263×204mm					

OPTIONAL ACCESSORY (for scales with RS232)

Printer	8001-PRINTER

ELECTRONIC POCKET SCALE (ECONOMIC TYPE)

ATTENTION:
LOW ACCURACY

- LCD display, with backlight
- Zero-setting, subtracting tare value, counting
- Overload alarm
- Automatic power off

8601-100

SPECIFICATION

Code	8601-100
Maximum weighing	100g
Minimum weighing	0.1g
Resolution (d)	0.01g
Accuracy (m is load)	0.1g≤m≤1g: ±0.03g; 1g<m≤30g: ±0.05g 30g<m≤50g: ±0.07g; m>50g: ±0.14g
Units	g, oz, dwt, ozt
Dimension of pan	55×64mm
Dimension (L×W×H)	108×65×21mm
Operation temperature	-10~40°C
Power supply	2×AAA batteries

use of pan

ELECTRONIC POCKET SCALE (ECONOMIC TYPE)

ATTENTION:
LOW ACCURACY

- LCD display, with backlight
- Zero-setting, subtracting tare value, counting
- Overload alarm
- Automatic power off

8602-200

SPECIFICATION

Code	8602-200
Maximum weighing	200g
Minimum weighing	0.2g
Resolution (d)	0.02g
Accuracy (m is load)	0.2g≤m≤2g: ±0.06g; 2g<m≤60g: ±0.1g 60g<m≤100g: ±0.14g; m>100g: ±0.28g
Units	g, oz, dwt, ozt
Dimension of pan	55×64mm
Dimension (L×W×H)	120×70×17mm
Operation temperature	-10~40°C
Power supply	2×CR2032 batteries

use of pan

WEIGHING SCALES (ECONOMIC TYPE)

- Unit: g, oz, lb, tl

8003-3

SPECIFICATION

Code	8003-3	8003-6	8003-10
Maximum weighing	3kg	6kg	10kg
Minimum weighing	2g	10g	20g
Resolution (d)	0.1g	0.5g	1g
Accuracy	±0.5g	±2.5g	±5g
Weighing pan size	157×157mm		
Operation temperature	5~35°C		
Power supply	2×AAA batteries, power adapter		
Dimension (L×W)	160×225mm		

DATA OUTPUT

8501-AL150

printer (**optional**)

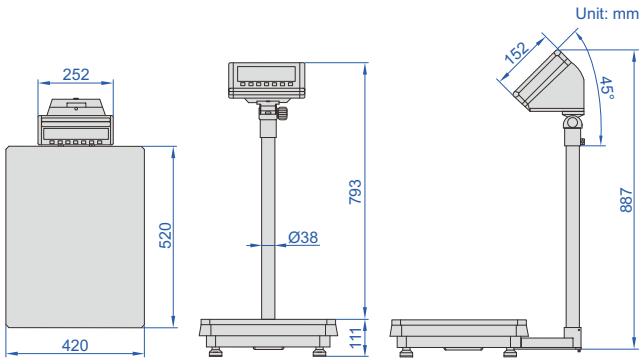

- LCD large screen display with LED backlight
- Weighing, overweight alarm, counting, keyboard lock, accumulating, auto zero and animal scale
- Unit: kg, g, lb, oz

SPECIFICATION

Code	8501-AL60	8501-AL150	8501-AL300
Maximum weighing	60kg	150kg	300kg
Minimum weighing	100g	200g	400g
Resolution (d)	5g	10g	20g
Accuracy	±10g	±20g	±30g
Operation temperature	-10~40°C		
Material	platform: stainless steel, base: die-cast aluminum		
Dimension of platform	420×520mm		
Power	rechargeable lead acid battery (6V/4Ah)		
Output	RS232		
Weight	18.3kg		

OPTIONAL ACCESSORY

Printer	**8001-PRINTER**
Data output cable (keyboard format)	**7302-8001** page 14

FLOOR SCALES

DATA OUTPUT

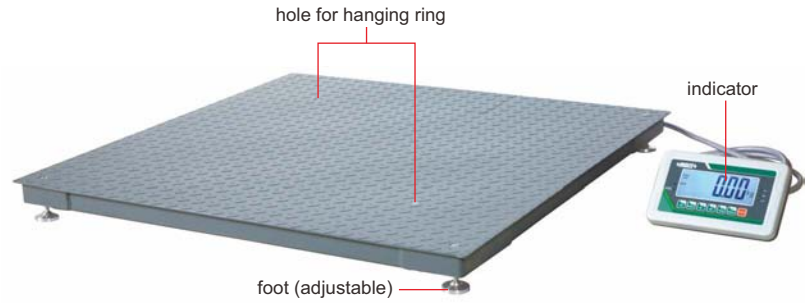

8401-1T1212

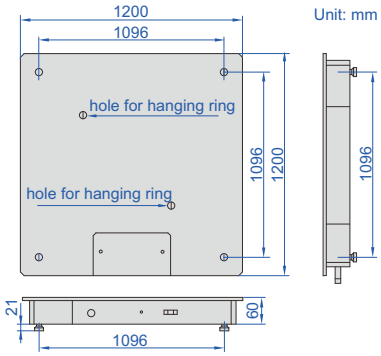

- LCD large screen display with automatic backlight
- Zero, overweight alarm, deduction, unit conversion, accumulating, animal scale, etc.
- Unit: kg, g, lb, oz
- OIML approved load cell

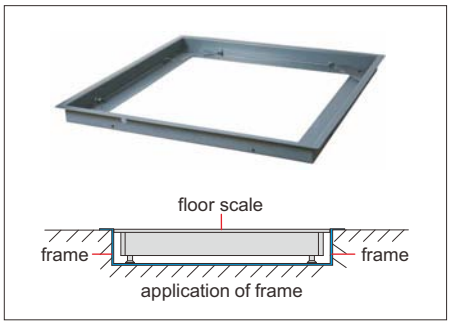

frame (**optional**)

stand (**optional**)

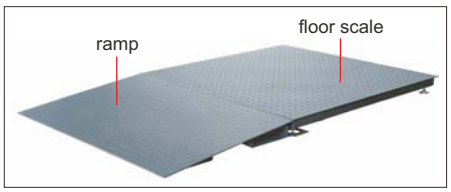

ramp (**optional**)

printer (**optional**)

SPECIFICATION

Code	8401-1T1212	8401-2T1212	8401-3T1212
Maximum weighing	1t	2t	3t
Minimum weighing	10kg	20kg	20kg
Resolution (d)	0.5kg	1kg	1kg
Verification interval (e)	0.5kg	1kg	1kg
Accuracy (m is load)	m≤250kg: ±0.25kg; 250kg<m≤1000kg: ±0.5kg	m≤500kg: ±0.5kg; 500kg<m≤2000kg: ±1kg; m>2000kg: ±1.5kg	
Load cell	4 pcs 350Ω		
Operation temperature	-10~40°C		
Material	mild steel		
Dimension of platform	1200×1200mm		
Power	rechargeable lead acid battery (6V/4Ah)		
Output	RS232		
Weight	140kg		

STANDARD DELIVERY

Main unit	1 pc
Indicator	1 pc
AC/DC adapter	1 pc
Stainless steel foot	4 pcs
Hanging ring	2 pcs

OPTIONAL ACCESSORY

Ramp	8401-1212-1
Frame	8401-1212-2
Stand	8401-STAND
Printer	8001-PRINTER

ELECTRONIC CRANE SCALES

IP65 WATERPROOF

- Dust/waterproof level: IP65
- LED display, remote control
- Low voltage indicator
- Unit: kg, lb
- Automatic power off
- Overload alarm
- 360° safe rotary hook and shackle
- Aluminum alloy die casting case with high strength

Unit: mm

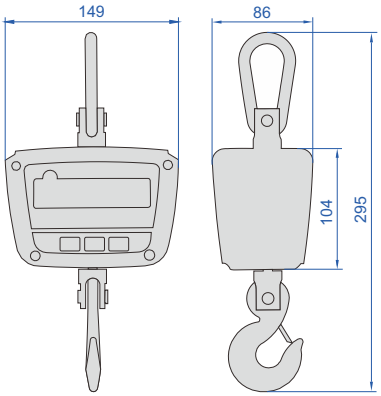

remote controller (included)

8201-150KG

SPECIFICATION

Code	8201-50KG	8201-150KG	8201-300KG
Maximum weighing	50kg	150kg	300kg
Minimum weighing	0.4kg	1.0kg	2.0kg
Resolution (d)	0.02kg/0.01kg	0.05kg/0.02kg	0.10kg/0.05kg
Verification interval (e)	0.02kg	0.05kg	0.10kg
Accuracy	±0.02kg	±0.05kg	±0.10kg
Operation temperature	-10~40°C		
Operation humidity	30%~90% RH		
Overload alarm	100%F.S.+9e		
Maximum safe load	125%F.S.		
Limited overload	400%F.S.		
Power supply	rechargeable battery 6V/3Ah (for 40 hours working)		
Stable reading time	≤8s		

STANDARD DELIVERY

Main unit	1 pc
Remote controller	1 pc
Battery charger	1 pc

ELECTRONIC CRANE SCALES (BASIC TYPE)

- LED display, remote control
- Low voltage indicator
- Unit: kg, lb
- Automatic power off
- Overload alarm
- 360° safe rotary hook and shackle
- Plastic case

Unit: mm

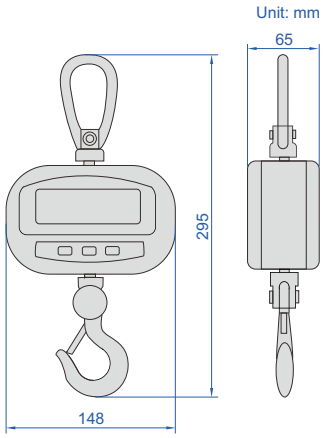

remote controller (included)

8202-150KG

SPECIFICATION

Code	8202-50KG	8202-150KG	8202-300KG
Maximum weighing	50kg	150kg	300kg
Minimum weighing	0.4kg	1.0kg	2.0kg
Resolution (d)	0.02kg/0.01kg	0.05kg/0.02kg	0.10kg/0.05kg
Verification interval (e)	0.02kg	0.05kg	0.10kg
Accuracy	±0.02kg	±0.05kg	±0.10kg
Operation temperature	-10~40°C		
Operation humidity	30%~90% RH		
Overload alarm	100%F.S.+9e		
Maximum safe load	125%F.S.		
Limited overload	400%F.S.		
Power supply	4×1.5V AA batteries (for 40 hours working)		
Stable reading time	≤8s		

STANDARD DELIVERY

Main unit	1 pc
Remote controller	1 pc

ELECTRONIC CRANE SCALES

- Zeroing, taring, weighing
- LED display, remote control
- Low voltage indicator
- Unit: kg, lb
- Overload alarm
- Automatic power off
- Aluminum alloy die casting case with high strength

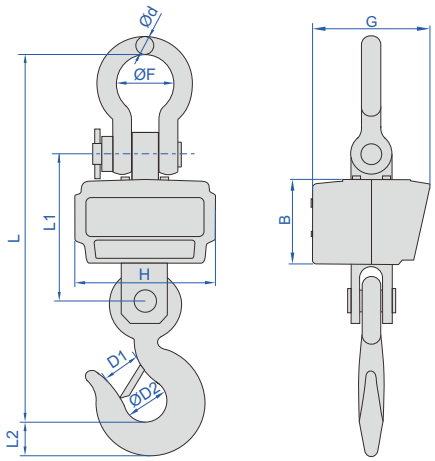

8204-CS3T

remote controller (included)

(mm)

Code	B	G	H	L	L1	L2	D1	ØD2	Ød	ØF
8204-CS06T	120	163	198	420	190	33	40	47	21	76
8204-CS1T	120	163	198	420	190	33	40	47	21	76
8204-CS2T	120	163	198	420	190	33	50	47	21	76
8204-CS3T	120	163	198	462	196	40	50	50	23	76
8204-CS5T	120	163	198	511	204	47	52	60	26	80
8204-CS10T	135	181	206	589	239	66	52	70	36	90
8204-CS15T	135	181	206	727	257	77	60	85	47	135

SPECIFICATION

Code	8204-CS06T	8204-CS1T	8204-CS2T	8204-CS3T
Maximum weighing	600kg	1000kg	2000kg	3000kg
Minimum weighing	4kg	10kg	20kg	20kg
Resolution (d)	0.2kg/0.1kg	0.5kg/0.2kg	1kg/0.5kg	1kg/0.5kg
Verification interval (e)	0.2kg	0.5kg	1kg	1kg
Accuracy (m is load)	m≤100kg: ±0.1kg; 50kg<m≤200kg: ±0.2kg; m>200kg: ±0.3kg	m≤250kg: ±0.25kg; 250kg<m≤1000kg: ±0.5kg	m≤500kg: ±0.5kg; 500kg<m≤2000kg: ±1kg	m≤500kg: ±0.5kg; 500kg<m≤2000kg: ±1kg; m>2000kg: ±1.5kg
Overload alarm	100%F.S.+9e			
Maximum safe load	150%F.S.			
Limited overload	400%F.S.			
Stable reading time	≤8s			
Power supply	rechargeable battery 6V/4Ah (for 40 hours working)			
Operation temperature	-10~40°C			
Operation humidity	≤85% RH			

Code	8204-CS5T	8204-CS10T	8204-CS15T
Maximum weighing	5000kg	10000kg	15000kg
Minimum weighing	40kg	100kg	100kg
Resolution (d)	2kg/1kg	5kg/2kg	5kg/2kg
Verification interval (e)	2kg	5kg	5kg
Accuracy (m is load)	m≤1000kg: ±1kg; 1000kg<m≤4000kg: ±2kg; m>4000kg: ±3kg	m≤2500kg: ±2.5kg; 2500kg<m≤10000kg: ±5kg	m≤2500kg: ±2.5kg; 2500kg<m≤10000kg: ±5kg; m>10000kg: ±7.5kg
Overload alarm	100%F.S.+9e		
Maximum safe load	150%F.S.		
Limited overload	400%F.S.		
Stable reading time	≤8s		
Power supply	rechargeable battery 6V/4Ah (for 40 hours working)		
Operation temperature	-10~40°C		
Operation humidity	≤85% RH		

To be continued

Continued from previous page

handheld display (**optional**)

large display (**optional**)

STANDARD DELIVERY

Main unit	1 pc
Remote controller	1 pc
Battery charger	1 pc

OPTIONAL ACCESSORY

Handheld display	**8204-INDICATOR** (must be supplied with scales together)
Large display	**8204-SCREEN** (must be supplied with scales together)

ELECTRONIC CRANE SCALES

- Zeroing, taring, weighing
- LED display, remote control
- Low voltage indicator
- Unit: kg, lb
- Overload alarm
- Automatic power off
- Aluminum alloy die casting case with high strength

8203-CW05T

remote controller (included)

Unit: mm

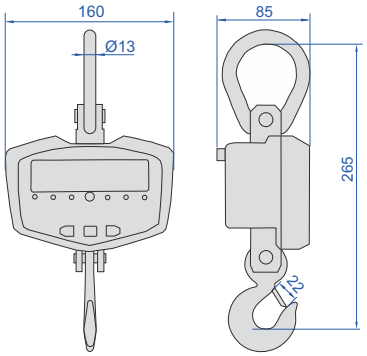

SPECIFICATION

Code	**8203-CW03T**	**8203-CW05T**	**8203-CW1T**
Maximum weighing	300kg	500kg	1000kg
Minimum weighing	2kg	4kg	10kg
Resolution (d)	0.1kg/0.05kg	0.2kg/0.1kg	0.5kg/0.2kg
Verification interval (e)	0.1kg	0.2kg	0.5kg
Accuracy (m is load)	m≤50kg: ±0.05kg; 50kg<m≤200kg: ±0.1kg; m>200kg: ±0.15kg	m≤100kg: ±0.1kg; 100kg<m≤400kg: ±0.2kg; m>400kg: ±0.3kg	m≤250kg: ±0.25kg; 250kg<m≤1000kg: ±0.5kg
Overload alarm	100%F.S.+9e		
Maximum safe load	150%F.S.		
Limited overload	400%F.S.		
Stable reading time	<10s		
Power supply	3×1.5V AA batteries		
Operation temperature	-10~40°C		
Operation humidity	30%~90% RH		

STANDARD DELIVERY

Main unit	1 pc
Remote controller	1 pc

MOISTURE ANALYZERS

DATA OUTPUT

VIDEO

8701-RM40

calibration weight
(included)

- LCD screen
- High sensitivity temperature and humidity sensor
- Ring halogen lamp heating evenly, shorten drying time

SPECIFICATION

Code		8701-RM20	8701-RM30	8701-RM40
Maximum weighing		120g	120g	120g
Resolution (d)		5mg	1mg	0.1mg
Accuracy for moisture	sample<10g	±10%	±0.5%	±0.2%
	sample≥10g	±5%	±0.3%	±0.1%
Operation temperature		13~25°C		
Verification interval		2.5s		
Warm-up time		20~30 minutes		
Weighing pan size		Ø90mm		
Heating source		halogen lamp (450W)		
Range for heating temperature		60~200°C		
Heating time setting		0~99 minutes		
Heating mode		standard heating, step heating, rapid heating		
Shutdown mode		automatic shutdown, manual shutdown, timed shutdown		
Output		RS232C		
Power supply		220V, 50/60Hz		
Dimension (L×W×H)		330×210×340mm		

STANDARD DELIEVERY

Main unit	1 pc
Weight	1 pc

OPTIONAL ACCESSORY

RS232 cable	8304-CABLE *
Printer	8303-PRINTER

*Used to connect with computers

INSPECTION CERTIFICATE

1kg 200g 500mg 200mg 100mg

- Supplied with manufacturer inspection certificate

CLASS SELECTION

Resolution of the weighing instruments	Required class of weights
0.001mg	E1
0.01mg	E2
0.1mg	E2/F1
1mg	F2
0.01g/0.1g	M1

OIML R111-2004 TOLERANCE

Weight	E2	F1	F2	M1
1mg	0.006mg	0.020mg	0.06mg	0.20mg
2mg	0.006mg	0.020mg	0.06mg	0.20mg
5mg	0.006mg	0.020mg	0.06mg	0.20mg
10mg	0.008mg	0.025mg	0.08mg	0.25mg
20mg	0.010mg	0.03mg	0.10mg	0.3mg
50mg	0.012mg	0.04mg	0.12mg	0.4mg
100mg	0.016mg	0.05mg	0.16mg	0.5mg
200mg	0.020mg	0.06mg	0.20mg	0.6mg
500mg	0.025mg	0.08mg	0.25mg	0.8mg
1g	0.03mg	0.10mg	0.3mg	1.0mg
2g	0.04mg	0.12mg	0.4mg	1.2mg
5g	0.05mg	0.16mg	0.5mg	1.6mg
10g	0.06mg	0.20mg	0.6mg	2.0mg
20g	0.08mg	0.25mg	0.8mg	2.5mg
50g	0.10mg	0.3mg	1.0mg	3.0mg
100g	0.16mg	0.5mg	1.6mg	5.0mg
200g	0.3mg	1.0mg	3.0mg	10mg
500g	0.8mg	2.5mg	8.0mg	25mg
1kg	1.6mg	5.0mg	16mg	50mg
2kg	3.0mg	10mg	30mg	100mg
5kg	8.0mg	25mg	80mg	250mg
10kg	16mg	50mg	160mg	500mg
20kg	30mg	100mg	300mg	1000mg

Weight	Class and material						Shape
	E2 (non-magnetic stainless steel)	F1 (non-magnetic stainless steel)	F1 (304 stainless steel)	F2 (304 stainless steel)	M1 (304 stainless steel)	M1 (steel, chrome plated)	
1mg	8911-1MGE2	8911-1MGF1	8911-1MGF1S	8911-1MGF2	8911-1MGM1	—	sheet
2mg	8911-2MGE2	8911-2MGF1	8911-2MGF1S	8911-2MGF2	8911-2MGM1		
5mg	8911-5MGE2	8911-5MGF1	8911-5MGF1S	8911-5MGF2	8911-5MGM1		
10mg	8911-10MGE2	8911-10MGF1	8911-10MGF1S	8911-10MGF2	8911-10MGM1		
20mg	8911-20MGE2	8911-20MGF1	8911-20MGF1S	8911-20MGF2	8911-20MGM1		
50mg	8911-50MGE2	8911-50MGF1	8911-50MGF1S	8911-50MGF2	8911-50MGM1		
100mg	8911-100MGE2	8911-100MGF1	8911-100MGF1S	8911-100MGF2	8911-100MGM1		
200mg	8911-200MGE2	8911-200MGF1	8911-200MGF1S	8911-200MGF2	8911-200MGM1		
500mg	8911-500MGE2	8911-500MGF1	8911-500MGF1S	8911-500MGF2	8911-500MGM1		
1g	8911-1GE2	8911-1GF1	8911-1GF1S	8911-1GF2	8911-1GM1	—	cylinder
2g	8911-2GE2	8911-2GF1	8911-2GF1S	8911-2GF2	8911-2GM1		
5g	8911-5GE2	8911-5GF1	8911-5GF1S	8911-5GF2	8911-5GM1		
10g	8911-10GE2	8911-10GF1	8911-10GF1S	8911-10GF2	8911-10GM1	8911-10GM1C	
20g	8911-20GE2	8911-20GF1	8911-20GF1S	8911-20GF2	8911-20GM1	8911-20GM1C	
50g	8911-50GE2	8911-50GF1	8911-50GF1S	8911-50GF2	8911-50GM1	8911-50GM1C	
100g	8911-100GE2	8911-100GF1	8911-100GF1S	8911-100GF2	8911-100GM1	8911-100GM1C	
200g	8911-200GE2	8911-200GF1	8911-200GF1S	8911-200GF2	8911-200GM1	8911-200GM1C	
500g	8911-500GE2	8911-500GF1	8911-500GF1S	8911-500GF2	8911-500GM1	8911-500GM1C	
1kg	8911-1KGE2	8911-1KGF1	8911-1KGF1S	8911-1KGF2	8911-1KGM1	8911-1KGM1C	
2kg	8911-2KGE2	8911-2KGF1	8911-2KGF1S	8911-2KGF2	8911-2KGM1	8911-2KGM1C	
5kg	8911-5KGE2	8911-5KGF1	8911-5KGF1S	8911-5KGF2	8911-5KGM1	8911-5KGM1C	
10kg	8911-10KGE2	8911-10KGF1	8911-10KGF1S	8911-10KGF2	8911-10KGM1	8911-10KGM1C	
20kg	8911-20KGE2	8911-20KGF1	8911-20KGF1S	8911-20KGF2	8911-20KGM1	8911-20KGM1C	

WEIGHT SETS

INSPECTION CERTIFICATE

- Supplied with manufacturer inspection certificate

8910-200GF1

CLASS AND MATERIAL

Specification	Code				
	E2 (non-magnetic stainless steel)	F1 (non-magnetic stainless steel)	F1 (304 stainless steel)	F2 (304 stainless steel)	M1 (304 stainless steel)
1mg~100g	8910-100GE2	8910-100GF1	8910-100GF1S	8910-100GF2	8910-100GM1
1mg~200g	8910-200GE2	8910-200GF1	8910-200GF1S	8910-200GF2	8910-200GM1
1mg~1kg	8910-1KGE2	8910-1KGF1	8910-1KGF1S	8910-1KGF2	8910-1KGM1
1mg~2kg	8910-2KGE2	8910-2KGF1	8910-2KGF1S	8910-2KGF2	8910-2KGM1
1mg~5kg	8910-5KGE2	8910-5KGF1	8910-5KGF1S	8910-5KGF2	8910-5KGM1

SPECIFICATION AND SHAPE

Weight	Specification				
	1mg~100g	1mg~200g	1mg~1kg	1mg~2kg	1mg~5kg
1mg	⬟	⬟	⬟	⬟	⬟
2mg	⬟ ⬟*	⬟ ⬟*	⬟ ⬟*	⬟ ⬟*	⬟ ⬟*
5mg	⬟	⬟	⬟	⬟	⬟
10mg	⬟	⬟	⬟	⬟	⬟
20mg	⬟ ⬟*	⬟ ⬟*	⬟ ⬟*	⬟ ⬟*	⬟ ⬟*
50mg	⬟	⬟	⬟	⬟	⬟
100mg	⬟	⬟	⬟	⬟	⬟
200mg	⬟ ⬟*	⬟ ⬟*	⬟ ⬟*	⬟ ⬟*	⬟ ⬟*
500mg	⬟	⬟	⬟	⬟	⬟
1g	▮	▮	▮	▮	▮
2g	▮ ▮*	▮ ▮*	▮ ▮*	▮ ▮*	▮ ▮*
5g	▮	▮	▮	▮	▮
10g	▮	▮	▮	▮	▮
20g	▮ ▮*	▮ ▮*	▮ ▮*	▮ ▮*	▮ ▮*
50g	▮	▮	▮	▮	▮
100g	▮	▮	▮	▮	▮
200g		▮ ▮*	▮ ▮*	▮ ▮*	▮ ▮*
500g			▮	▮	▮
1kg			▮	▮	▮
2kg				▮ ▮*	▮ ▮*
5kg					▮
Quantity	21 pcs	23 pcs	25 pcs	27 pcs	28 pcs
Total range	1mg~211.11g	1mg~611.11g	1mg~2111.11g	1mg~6111.11g	1mg~11111.11g

⬟ sheet ▮ cylinder

⬟* sheet, with mark ▮* cylinder, with mark