4-54. The 100 KHz filter and the 6.5 MHz crystal filter operate together to select the IF bandwidth of the 6.5 MHz 4th IF signal. Diode switches bypass all filter elements when the 1000 KHz bandwidth is selected. When the 100 KHz bandwidth is selected, diode switches also bypass the filter elements in the 6.5 MHz crystal filter. The 100 KHz filter performs bandpass filtering when the selected bandwidth is 100 KHz or less, and the 6.5 MHz crystal filter performs additional filtering when the selected bandwidth is less than 100 KHz. No filtering is required for the 1000 KHz bandwidth.

4-55. The amplified and filtered output of the 6.5 MHz crystal filter is applied to the LIN/LOG amplifier (A205). After four stages of input amplification, a diode switch routes the 6.5 MHz signal to either the linear or the logarithmic amplifier-detector, as determined by the setting of LIN/LOG switch S204. The detected video output of the selected amplifier-detector is supplied through an output amplifier to the video processor.

4-56. The video processor contains a video duration circuit and a low-pass video filter. The video duration circuit, controlled by VIDEO DURATION - BW switch S205, is bypassed when switch S205 is in the OFF or 1 KHz position. In the SHORT or LONG position of the switch, the video duration circuit is activated, and provides a selectable delay in the fall time of the displayed signal. When used with narrow pulse signals, this delay has the effect of brightening the display. The SHORT or LONG position is selected for optimum effect.

4-57. When VIDEO DURATION - BW switch S205 is not in the 1 KHz position, the cut-off frequency of the video filter is determined by the selected IF bandwidth, as follows:

Selected IF Bandwidth	Video Filter Cut-Off Frequency
1000 KHz	None
100 KHz	100 KHz
10 KHz	100 KHz
1 KHz	1 KHz
3 KHz	1 KHz

When switch S205 is in the 1 KHz position, the video filter cut-off frequency is 1 KHz, regardless of the selected IF bandwidth.

4-58. MODEL 712-2A STANDARD PERSISTENCE DISPLAY UNIT (Figure 8-1). As shown in figure 4-1, the major elements of the display unit are the power supply circuits, the horizontal sweep circuits, the vertical drive circuits, and the CRT circuits.

4-59. POWER SUPPLY CIRCUITS. A-c power (115 volts or 230 volts) is supplied to the unit via LINE INPUT connector J108 on the rear panel. Fuse F101 provides input power protection. When POWER ON switch S101 is set to ON, power is applied (via filtered power module J108) to stepdown transformer T101. Power supply A101 converts the outputs from the secondary windings of T101 to the d-c voltages required for the operation of all spectrum analyzer modules. The following d-c voltages are produced by the power supply:

a. +12 volts

b. ±22 volts

c. +200 volts

d. -6 volts

4-60. HORIZONTAL SWEEP CIRCUITS (Figure 4-7). As shown in figure 4-7, the horizontal sweep circuits include the sync circuits and the sweep generator. The sync circuits initiate the generation of each sawtooth sweep by the sweep generator.

4-61. SYNC CIRCUITS. Sweep synchronization is determined by the SYNC switches, as follows:

a. Video Triggering - When SINGLE/VIDEO switch S2 on board A102 is pressed, and VIDEO TRIG ADJ control R110S1 is switched from the SINGLE position, the video trigger signal from the vertical drive circuits triggers the sync one-shot (board A103), producing the sweep start triggers.

b. Line Sync - When LINE switch S4 on board A102 is pressed, a line frequency signal from transformer T101 is applied to the sync amplifier and differentiator (board A103). The resulting differentiated pulses are used to trigger the sync one-shot (board A103), producing sweep start triggers at the line frequency rate.

c. Single Sweep - Each time SINGLE SWEEP switch S1 on board A102 is pressed, a sweep start trigger is produced, if the sync controls are set to SINGLE.

d. Free-Run - When FREE RUN switch S3 on board A102 is pressed, the interval between sweep start triggers is controlled by a hold-off circuit (board A102) which receives the ramp output of the sweep generator. After each sweep terminates, the hold-off circuit delays the start of the next sweep by a fixed time interval determined by an R-C time constant.

4-62. SWEEP GENERATOR. The sweep start trigger from the sync circuits is applied to the sweep control (board A102). Each time the sweep control is triggered, a sawtooth sweep by the ramp generator (board A102) is initiated. The slope of the sawtooth voltage is determined by the position of SWEEP MODE switch S102, in conjunction with the STD SWEEP (board A102) and FAST SWEEP (board A103) switches. When the SWEEP MODE switch is set to STD, the sawtooth slope is determined by the capacitor selected by the STD SWEEP switches. When the SWEEP MODE switch is set to FAST, the slope is determined by the capacitor selected by the FAST SWEEP switches.

4-63. When the SWEEP MODE switch is set to MAN, the sweep control and ramp generator are disabled, and the sweep sawtooth is a function of SWEEP VAR/MAN control R103 (manual sweep mode). When MAN is not selected, SWEEP VAR/MAN control R103 allows the slope of the sawtooth to be varied between the sweep steps selected by the STD SWEEP or FAST SWEEP switches.

4-64. When the SWEEP MODE switch is set to STD or FAST, the sweep control terminates each sweep when the sawtooth voltages reaches the voltage that is equivalent to maximum horizontal deflection. Another sweep is generated each time a sweep start trigger is applied to the sweep control. Each time the sweep control terminates the sweep, a retrace blanking signal is produced and supplied to the CRT circuits.

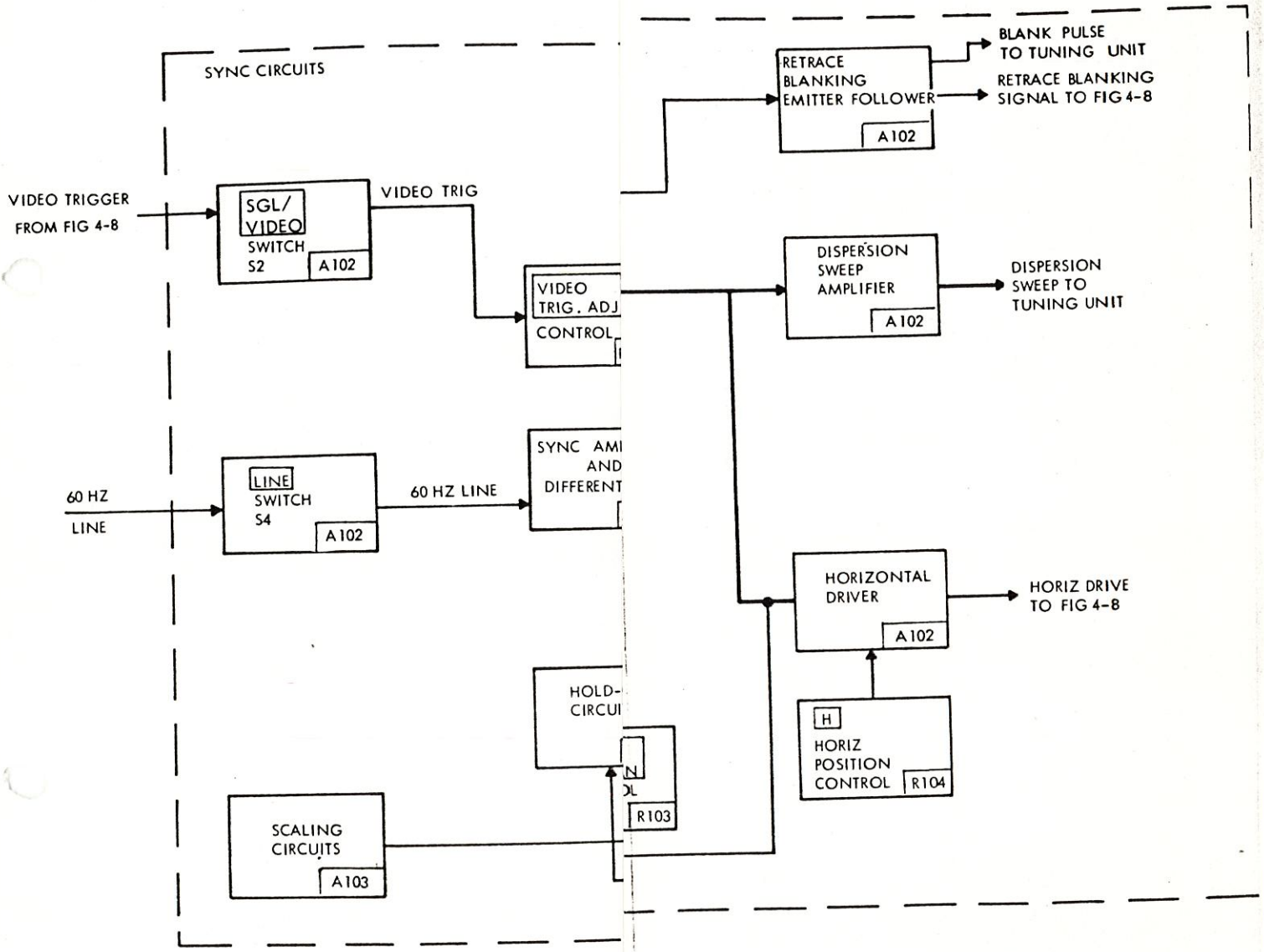

NOTE

*SWEEP CAPACITOR FOR AUTO SWEEP MODE IS LOCATED ON TUNING UNIT. THE VALUE OF THIS CAPACITOR OPTIMIZES THE SWEEPTIME IN THE AUTOMATIC MODE.

Figure 4-7. Horizontal Sweep Circuit

4-65. The sawtooth voltage from the ramp generator is distributed as follows:

a. The dispersion sweep amplifier (board A102) supplies the sawtooth (dispersion sweep) to the tuning unit.

b. The horizontal driver (board A102) supplies the sawtooth (horizontal drive) to the CRT circuits.

4-66. VERTICAL DRIVE CIRCUITS (Figure 4-8). Video from the tuning unit is supplied through emitter followers to the following points:

a. The vertical output amplifier (board A102) which supplies the video signal to the CRT circuits.

b. The baseline blanking comparator (board A104) in the CRT circuits.

c. The horizontal sweep circuits, for use in sync triggering in the video trigger mode (see paragraph 4-62).

4-67. CRT CIRCUITS (Figure 4-8). The CRT deflection is controlled by the vertical drive signal from the vertical drive circuits and the horizontal drive signal from the horizontal sweep circuits. A video blanking signal, applied to the CRT by a blanking driver (board A104) derived from any of the following sources:

a. At the termination of each horizontal sweep, the horizontal sweep circuits supply a retrace blanking signal to the retrace blanking amplifier (board A104).

b. A baseline blanking comparator (board A104) blanks the video below a level established by the BASELINE BLANKING control R111).

4-68. The high voltages required for CRT operation are supplied by high voltage power supply A105, which produces a 1500-volt output. Voltage dividers (board A104) and the INTENSITY, FOCUS, and ASTIG controls provide voltages required for the various CRT grids. A trace alignment coil, controlled by TRACE ALIGN potentiometer R102, permits any tilt in the horizontal trace to be eliminated.

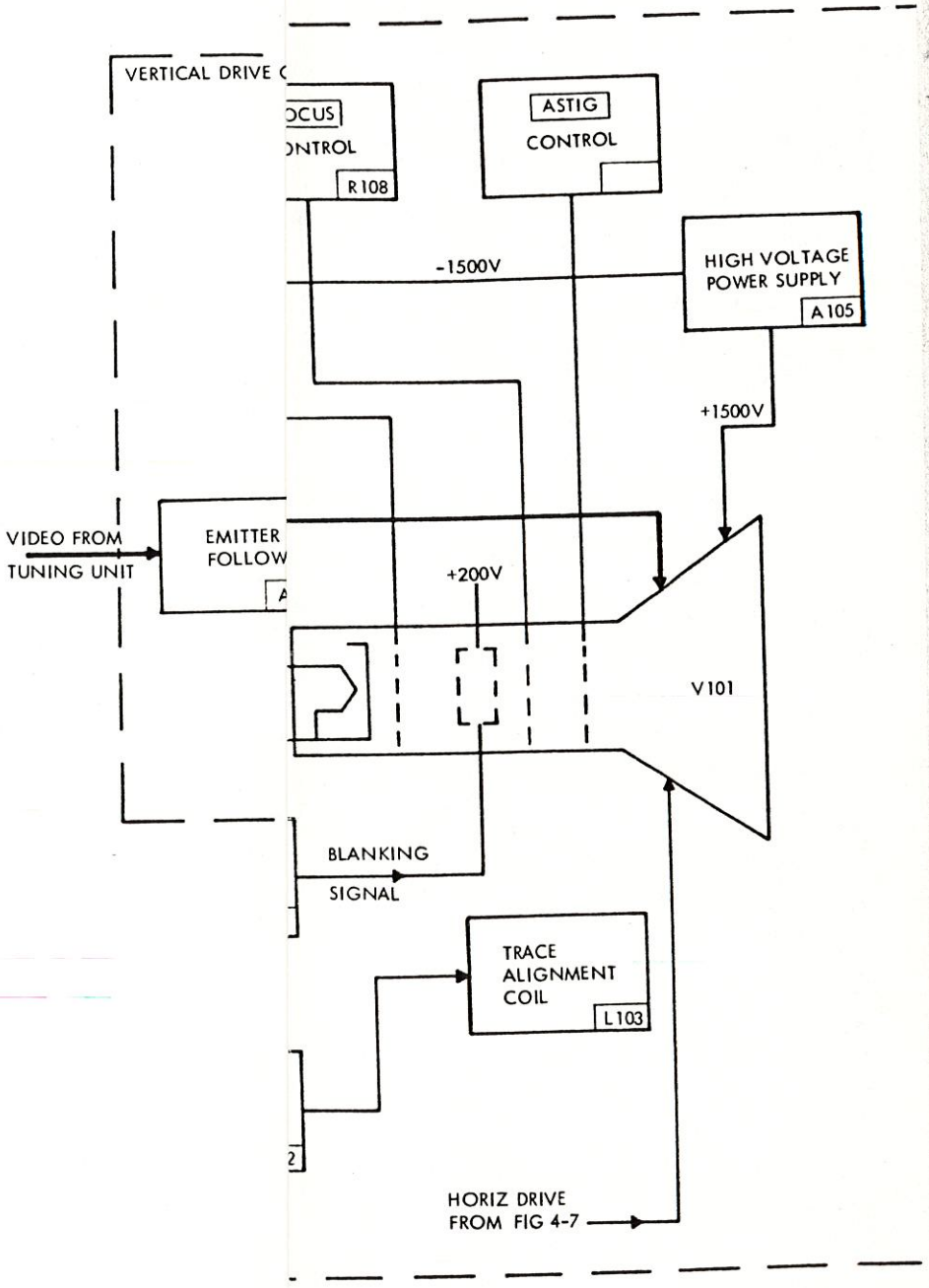

Figure 4-8. Vertical Drive and CRT Circui

SECTION V

MAINTENANCE

5-1. GENERAL

5-2. Maintenance of the Microwave Spectrum Analyzer system includes performance testing, calibration, troubleshooting, and repair. Performance tests (Section VI) and Calibrations (Section VII) are normally conducted periodically to assure that the instrument is operating properly, and to verify that calibrations are within limits.

5-3. In general, faults in the spectrum analyzer system can be divided into two categories. Degradation faults are indicated by a gradual deterioration in equipment performance. Degradation faults are detected by making periodic performance checks and comparing results with previously-recorded values. Faults of this type may ordinarily be corrected by recalibration, but frequent necessity for recalibration, or inability to achieve calibration, is an indication of a marginal or defective component which should be isolated and replaced. The other category of faults consists of component failures, resulting in an obvious failure of the spectrum analyzer, such as loss of display, loss of frequency scan, or loss of signal between the input and the display.

5-4. For degradation faults, an analysis of the specific performance test results or calibration procedure observations which show abnormalities will usually permit localization of the trouble. For component failures, it is usually necessary first to isolate the trouble to the display section or tuning unit section. Final trouble isolation is then accomplished by signal checks in the malfunctioning unit.

5-5. LOCATION OF COMPONENTS AND ADJUSTMENTS

5-6. The interior views presented in figure 5-1 are marked to identify major assemblies and component assemblies. Each internal adjustment control is designated. These views are useful for repair operations, and also for performing the calibration of Section VII.

5-7. OVERALL CHECKOUT AND TROUBLESHOOTING (Figures 5-2 and 5-3)

5-8. The performance checks in Section VI provide the principal means for checking out the Model 762-2A. Figure 5-2 provides detailed checkout and troubleshooting of the Model 712-2A display unit. Figure 5-3 provides detailed troubleshooting for the Model 809-2A tuning unit. These two troubleshooting diagrams permit isolation of faults to the replaceable module level.

5-9. In using figures 5-2 and 5-3, the following general procedure applies:

Step 1. Analyze the symptoms of malfunction to determine whether or not the Model 712-2A display unit can be eliminated as the cause. If the display unit cannot be eliminated, perform the procedure in figure 5-2. Successful completion of the procedure in figure 5-2 without any abnormal indications provides essentially conclusive evidence that the display unit is operating normally.

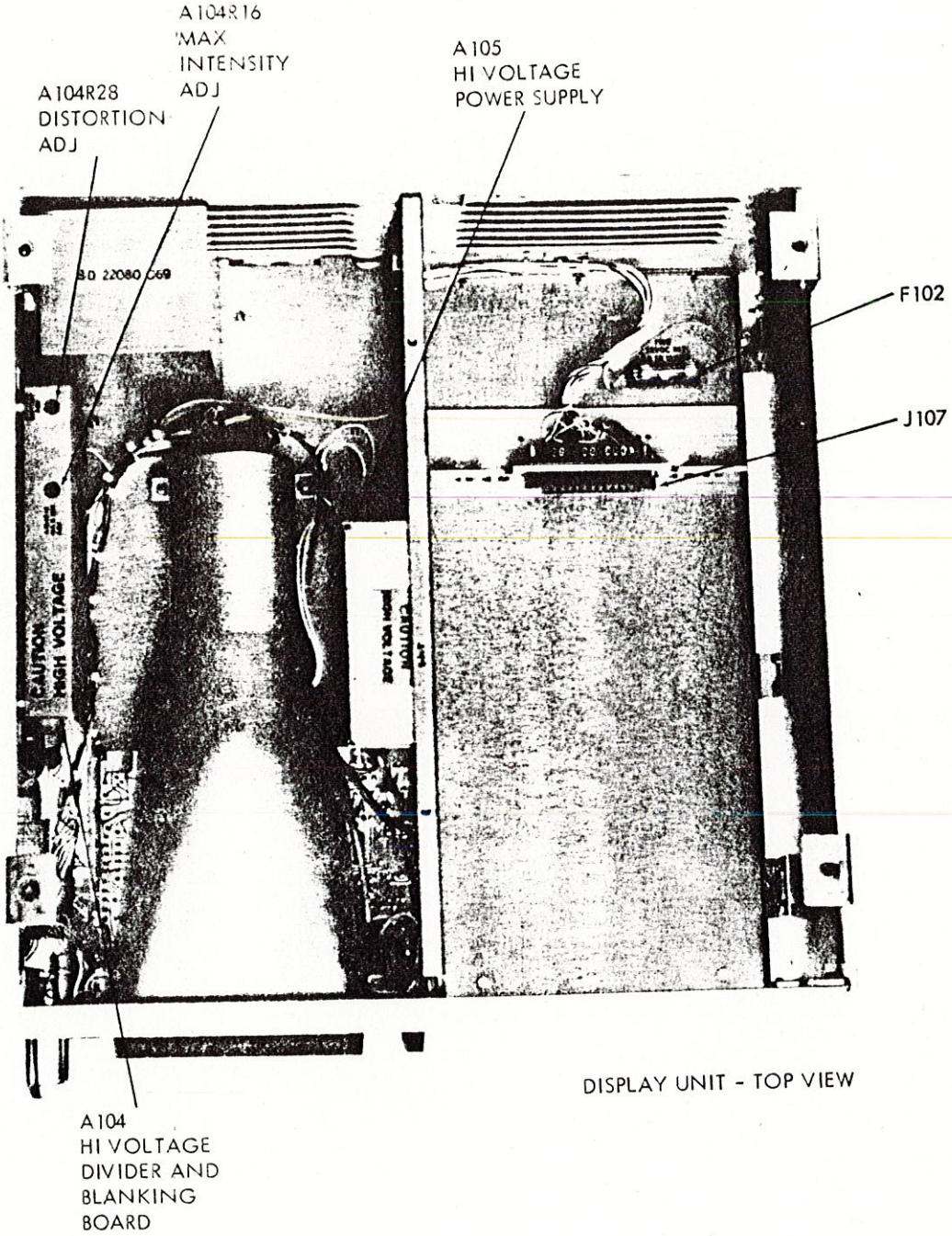

DISPLAY UNIT - TOP VIEW

Figure 5-1. Components and Adjustment Locations
(Sheet 1 of 8)

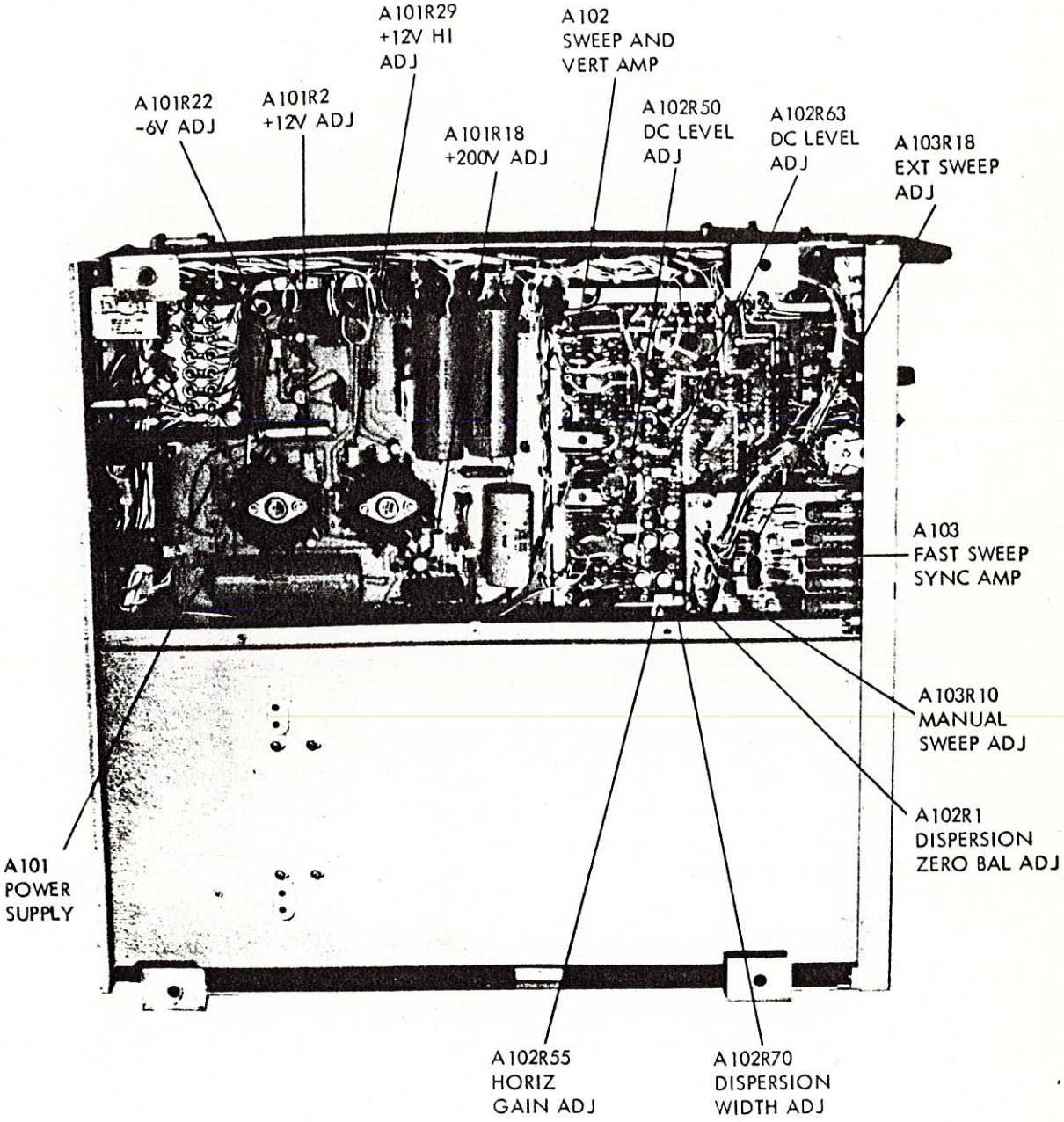

Figure 5-1. Components and Adjustment Locations
(Sheet 2 of 8)

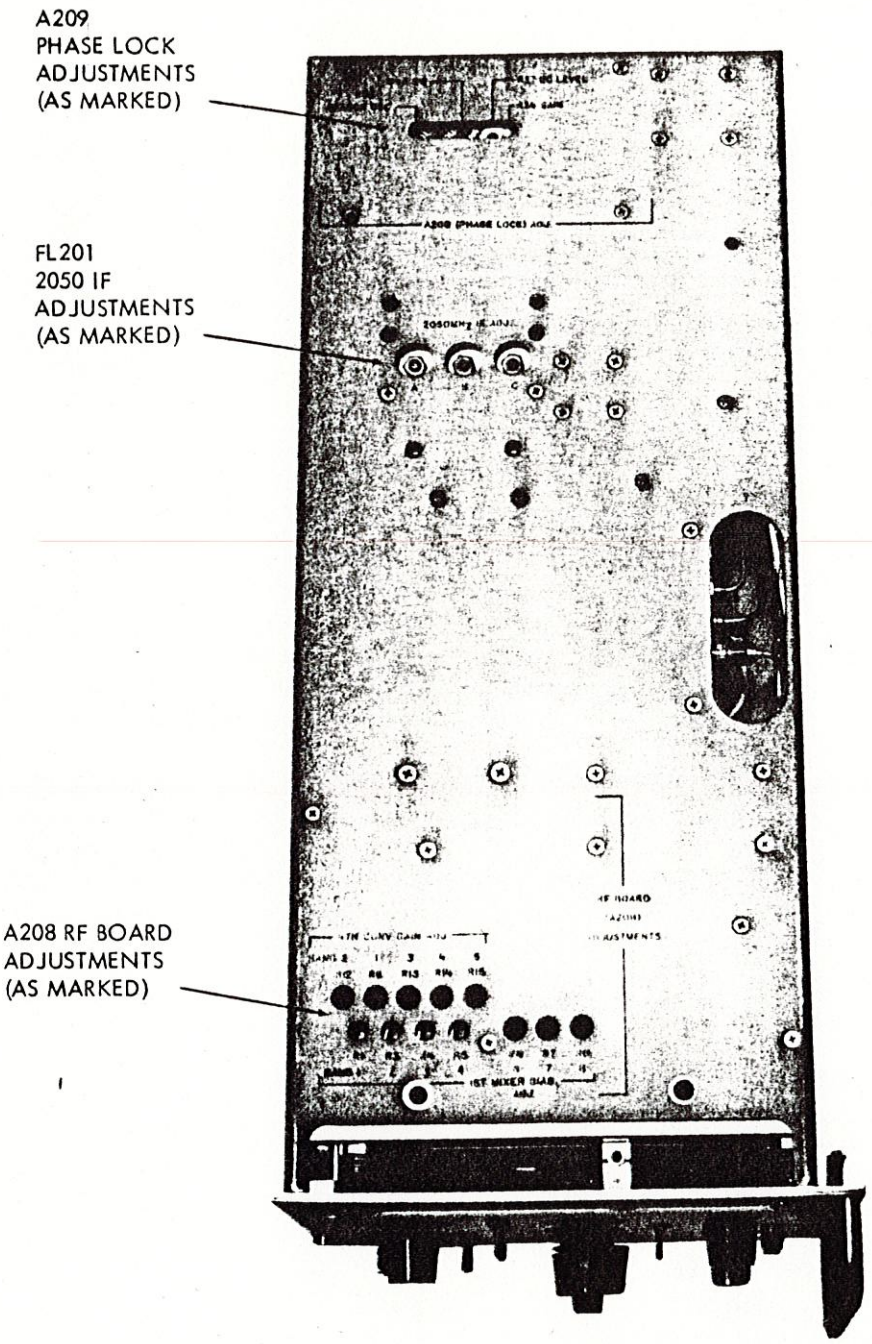

Figure 5-1. Components and Adjustment Locations
(Sheet 3 of 8)

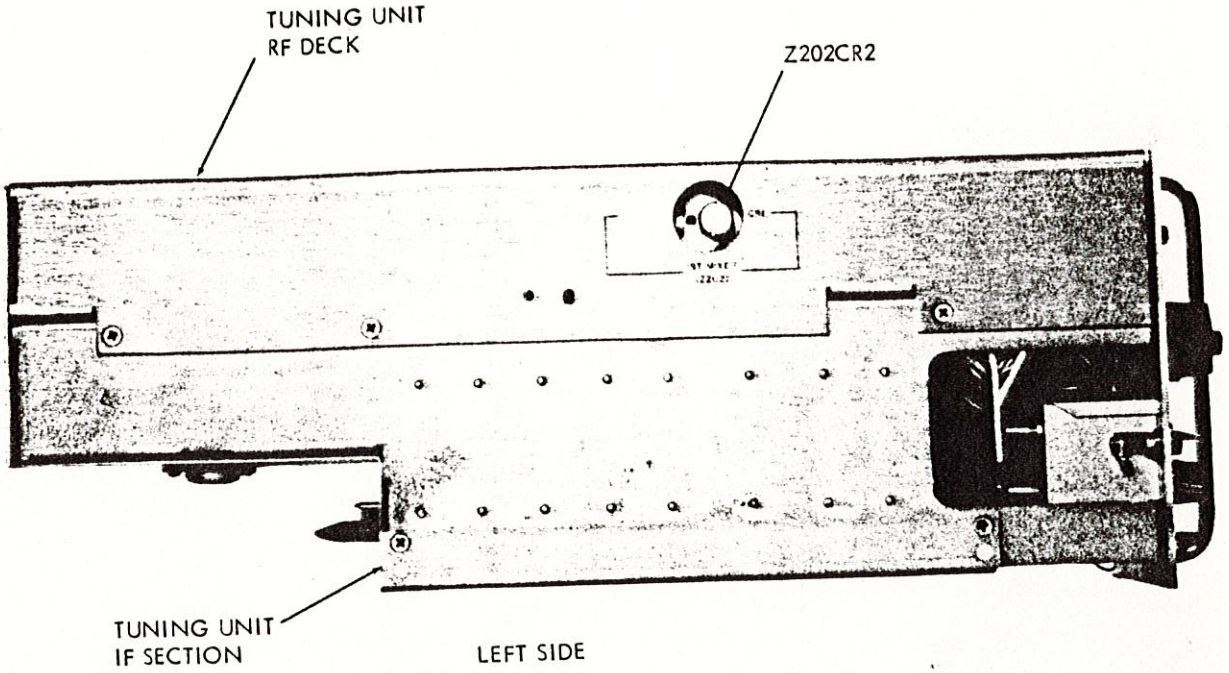

LEFT SIDE

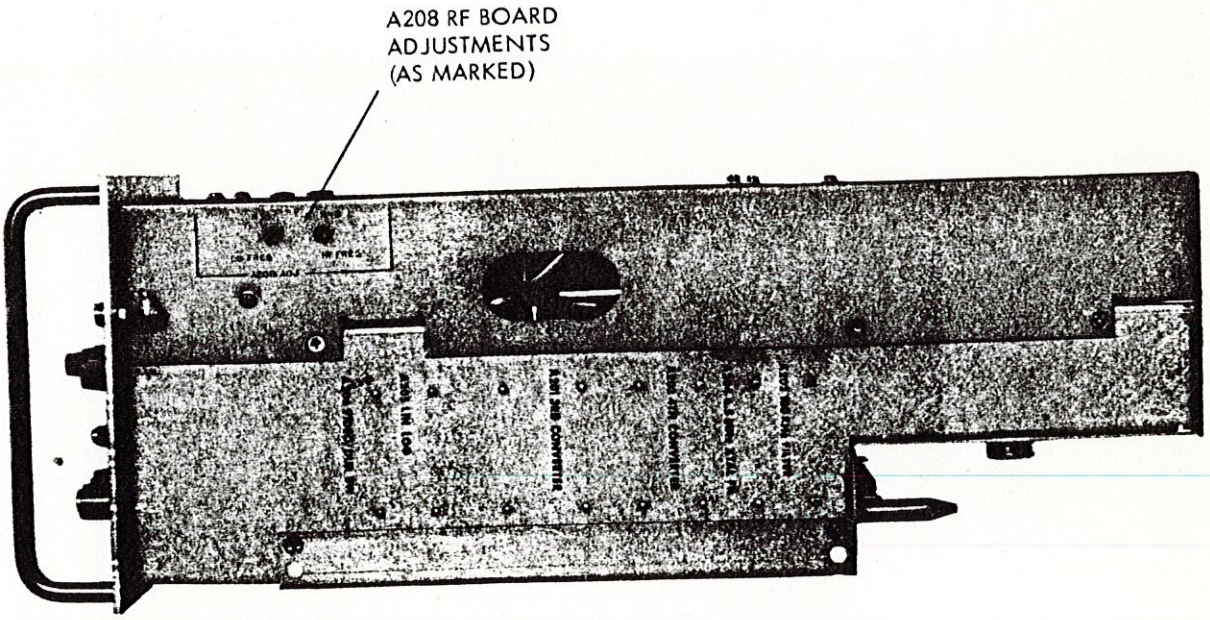

RIGHT SIDE

Figure 5-1. Components and Adjustment Locations
(Sheet 4 of 8)

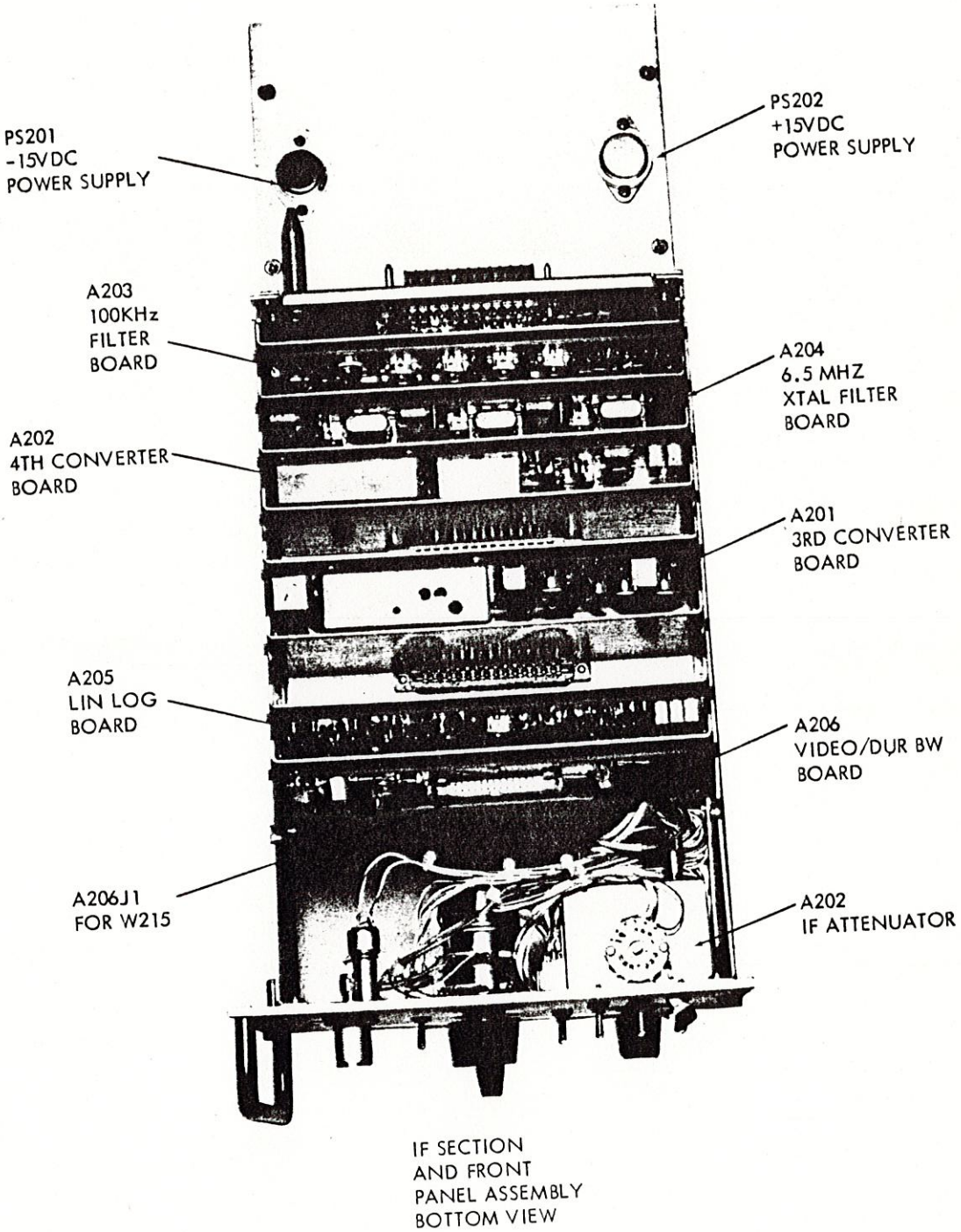

Figure 5-1. Components and Adjustment Locations
(Sheet 5 of 8)

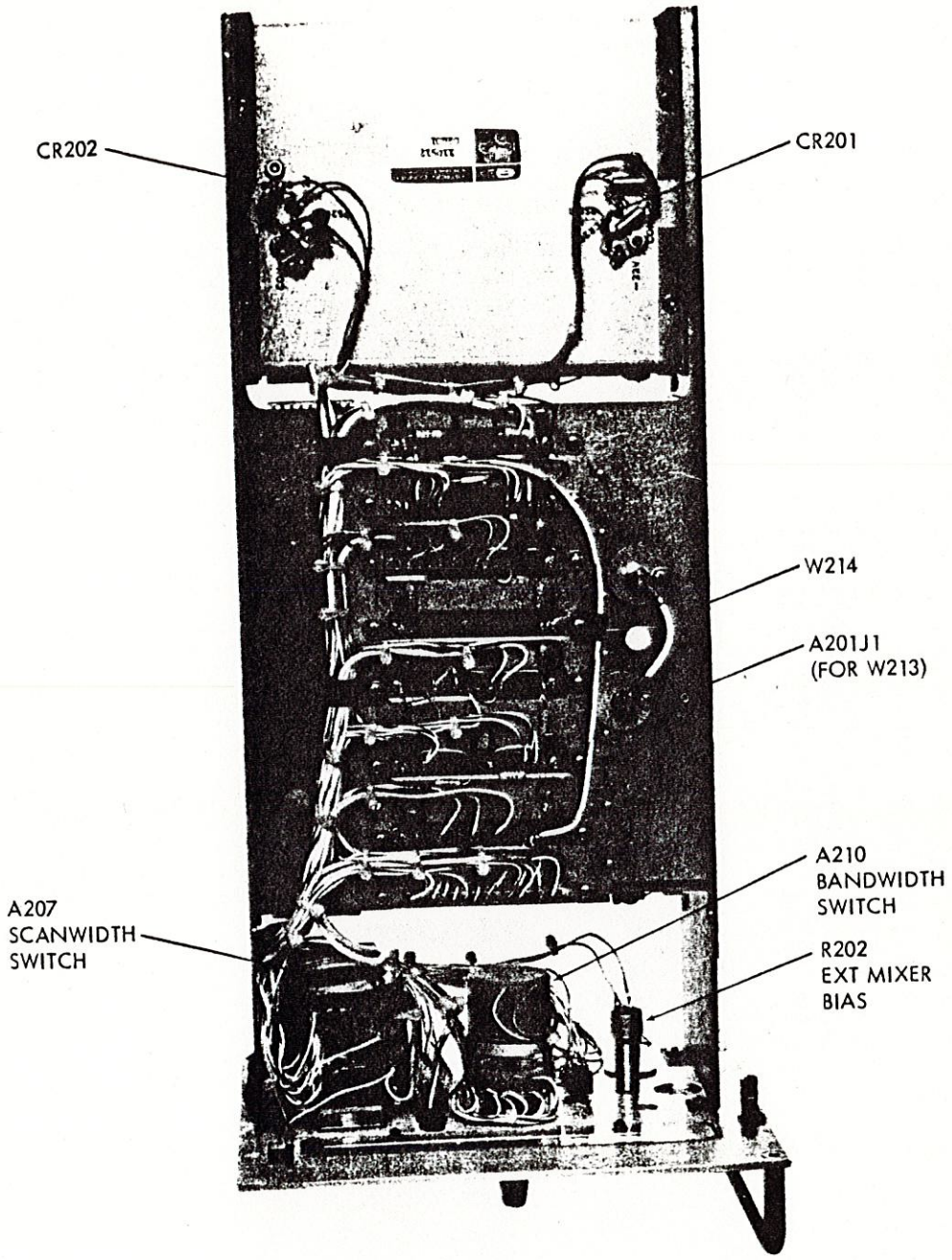

IF SECTION AND
FRONT PANEL ASSEMBLY
TOP VIEW

Figure 5-1. Components and Adjustment Locations
(Sheet 6 of 8)

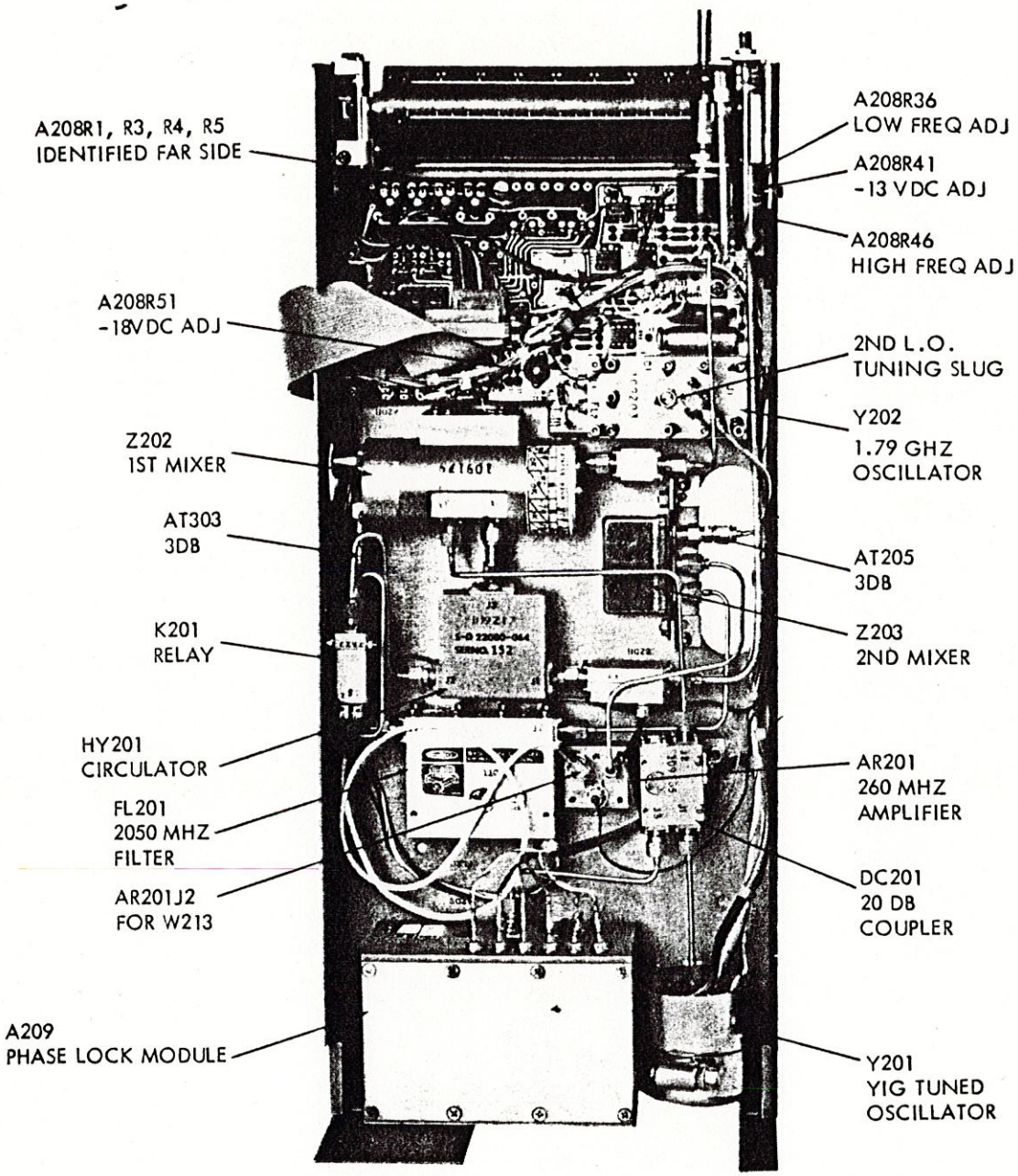

RF DECK
BOTTOM
VIEW

Figure 5-1. Components and Adjustment Locations
(Sheet 7 of 8)

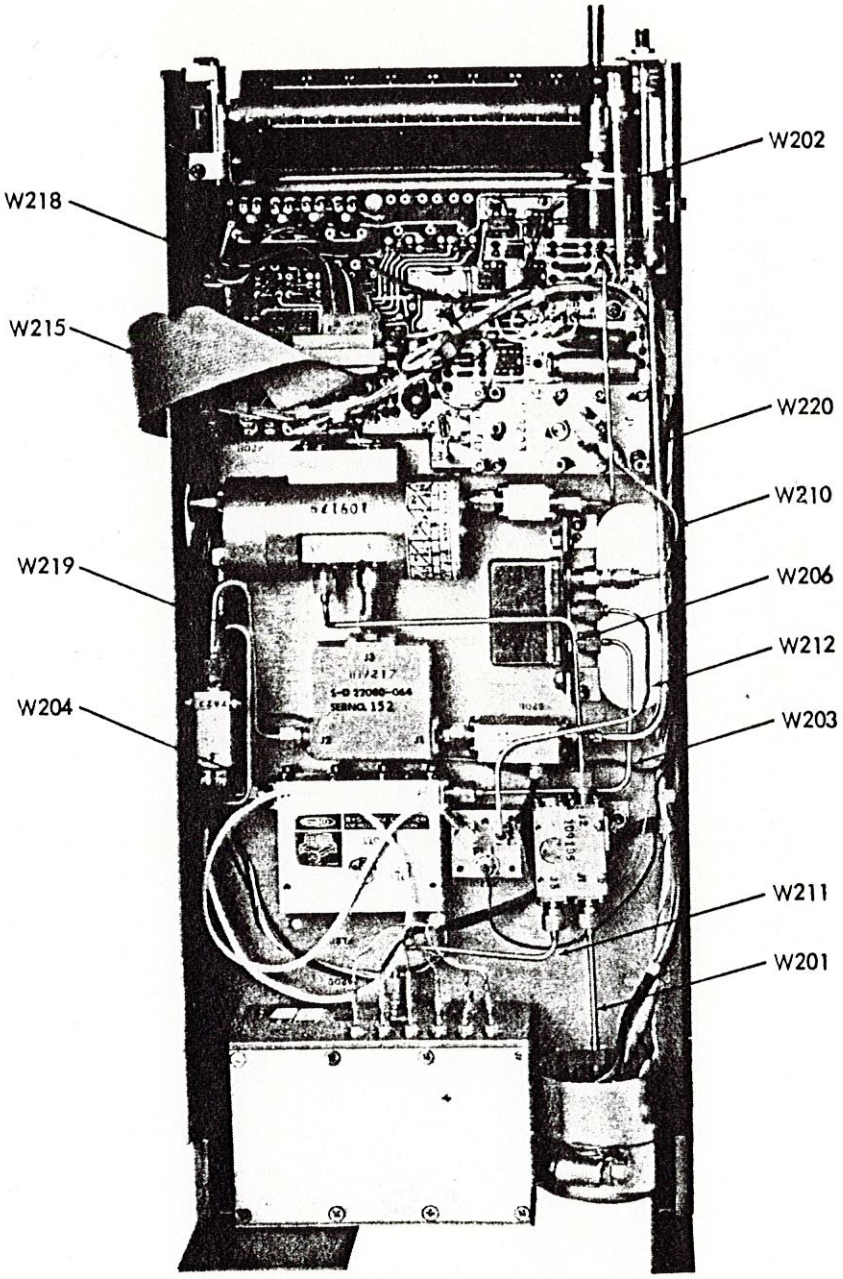

Figure 5-1. Components and Adjustment Locations
(Sheet 8 of 8)

Step 2. If the display unit is determined to be operating normally, the fault is in the Model 809-2A tuning unit. Before proceeding to figure 5-3, perform the following steps:

a. Check ±15-volt outputs of the ±15-volt power supplies (PS201 and PS202) in the tuning unit. If either voltage is abnormal, replace the associated power supply.

b. Check operation of the tuning unit in each band to determine whether all bands are abnormal, or if only certain bands have abnormally low sensitivity.

c. Check whether operation is abnormal for all settings of SCANWIDTH, BANDWIDTH, IF ATTEN, LIN/LOG, VIDEO DURATION, and FULL SWEEP/SIG IDENT switches.

5-10. If replacement of the module indicated to be defective in figure 5-3 fails to correct the malfunction, check the cables to the module that is indicated to be defective. The succeeding subparagraphs describe the checks in figures 5-2 and 5-3 in more detail.

5-11. DISPLAY UNIT CHECKOUT AND TROUBLESHOOTING (Figure 5-2)

5-12. This diagram is divided into the following major checkout/troubleshooting sequences:

a. START Sequence. Power is applied, and operation of the POWER ON indicator is checked. Then the display is checked for presence of noise and a sweep trace. The ±22 VDC and power supplies are also checked.

b. Sequence A. This procedure is performed when no sweep trace is present.

c. Sequence B. This procedure is performed when there is no noise on the sweep trace.

d. Sequence C. This procedure checks miscellaneous secondary functions.

5-13. MICROWAVE TUNING UNIT TROUBLESHOOTING (Figure 5-3)

5-14. This diagram is divided into the following major troubleshooting sequences:

a. START Sequence. This sequence is used to isolate malfunctions that occur only on certain bands.

b. Sequence A. If all bands are abnormal, this sequence is used to determine whether the fault is present in all operating modes and switch positions. If the fault is present in all operating modes and switch positions, the 1st local oscillator output is checked to determine whether or not the fault is in the 1st local oscillator circuits.

c. Sequence B. This sequence is used to isolate faults in the 1st local oscillator circuits.

d. Sequence C. When the 1st local oscillator output is normal, this sequence is used to determine whether the fault is in the RF deck or in the IF and video circuits. If the fault is in the RF deck, detailed troubleshooting isolates the defective module.

e. Sequence D. This sequence is used to isolate faults in the IF and video circuits.

f. Sequence E. This sequence is used to isolate faults that occur only in certain modes, or in certain positions of the SCANWIDTH, BANDWIDTH, IF ATTEN, and VIDEO DURATION switches.

NOTE

Measurement of average noise level with a signal injected at various points in the tuning unit is used extensively in figure 5-3 to isolate malfunctions. Refer to paragraph 5-15 for the general procedure for measuring average noise level.

5-15. GENERAL PROCEDURE FOR MEASURING AVERAGE NOISE LEVEL

5-16. Measurement of average noise level is one of the principal techniques for fault isolation in the tuning unit. To perform this test, the RF/IF signal path at some point in the tuning unit is interrupted, and a signal generator is connected to the point where the path was interrupted. The frequency of the signal generator output depends upon the point of connection, and corresponds to the frequency normally present at that point. The signal generator output level is then adjusted until the resulting level on the CRT is 20 dB above the average noise level present when the signal generator output is zero. The adjusted signal generator output level is then recorded from the output level meter of the signal generator. The average noise level in dBm is then obtained by subtracting 20 dB from the signal generator level previously recorded. The procedure is as follows:

Step 1. Make the following preliminary control settings:

Control	Setting
SWEEP MODE	STD
STD SWEEP	10 msec/DIV
SYNC	FREE RUN
BASELINE BLANKING	OFF
BANDWIDTH - KHz	100
SCANWIDTH/DIV	100 kHz
LIN/LOG	LOG
STAB	OFF
FULL SWEEP/SIG IDENT	OFF
VIDEO DURATION - BW	1 KHz
IF ATTEN	None (all switches down)
IF GAIN - VAR	60 dB

Step 2. Connect the signal generator to the point of test, and set up the signal generator for the frequency which corresponds to the intermediate frequency normally present at the point of test.

Step 3. With zero signal output from the signal generator, observe the CRT display, and note the level (in dB) which corresponds to the average noise level.

Step 4. Adjust the signal generator output level until the horizontal line produced on the CRT display by the signal generator output is exactly 20 dB above the average noise level noted in step 3.

Step 5. Read and record the signal generator output level, as indicated on the output level meter of the signal generator.

Step 6. Subtract 20 dB from the output level recorded in step 5 to obtain the average noise level. For example, if the output level recorded in step 5 is -95 dBm, the average noise level is -95 dBm -20 dB = -115 dBm.

5-17. DETAILED TROUBLESHOOTING OF REPLACEABLE MODULES

5-18. After locating the defective module using the procedures in figures 5-2 and 5-3, the malfunctioning module is normally removed and replaced. In some cases, it may be necessary to isolate, remove, and replace the defective part on printed circuit boards. The following data is provided to aid in isolating faults to the defective part on printed circuit boards:

a. The detailed theory descriptions in Section IV, supported by detailed block diagrams.

b. The schematic diagram in Section IX.

c. The calibration procedures for individual modules, provided in Section VII. These procedures can be used in the same manner as a test procedure for an individual circuit board.

5-19. The following modules are considered non-repairable at the field level:

a. A105
b. A209
c. Z201
d. Z202 (except for diode CR1 - see paragraph 5-22)
e. Z203
f. Z204
g. Y201
h. A208Y202
i. HY201
j. K201
k. AT205
l. AT206
m. FL201
n. AR201
o. DC201
p. PS201
q. PS202
r. Local oscillator board (part of A201)
s. Local oscillator board (part of A202)

5-20. REPAIR AND REPLACEMENT

5-21. Complete replacement parts information, including illustrations for identification of parts, is given in Section VIII.

5-22. REPLACEMENT OF FIRST MIXER DIODE

5-23. The input mixer diode is suceptible to damage from input signal overloads. Replace a damaged diode as follows:

(a) Remove tuning unit from display unit.

(b) Unscrew the diode cap, accessible through the left side panel opening (see figure 5-1).

(c) Remove and replace diode (Z202CR1).

(d) Install diode cap.

NOTE

It is advisable to conduct a performance check of the unit after replacing input mixer diode, followed by the indicated adjustments if required.