Seventh Edition

ALBERT MALVINO
DAVID J. BATES

Electronic Principles

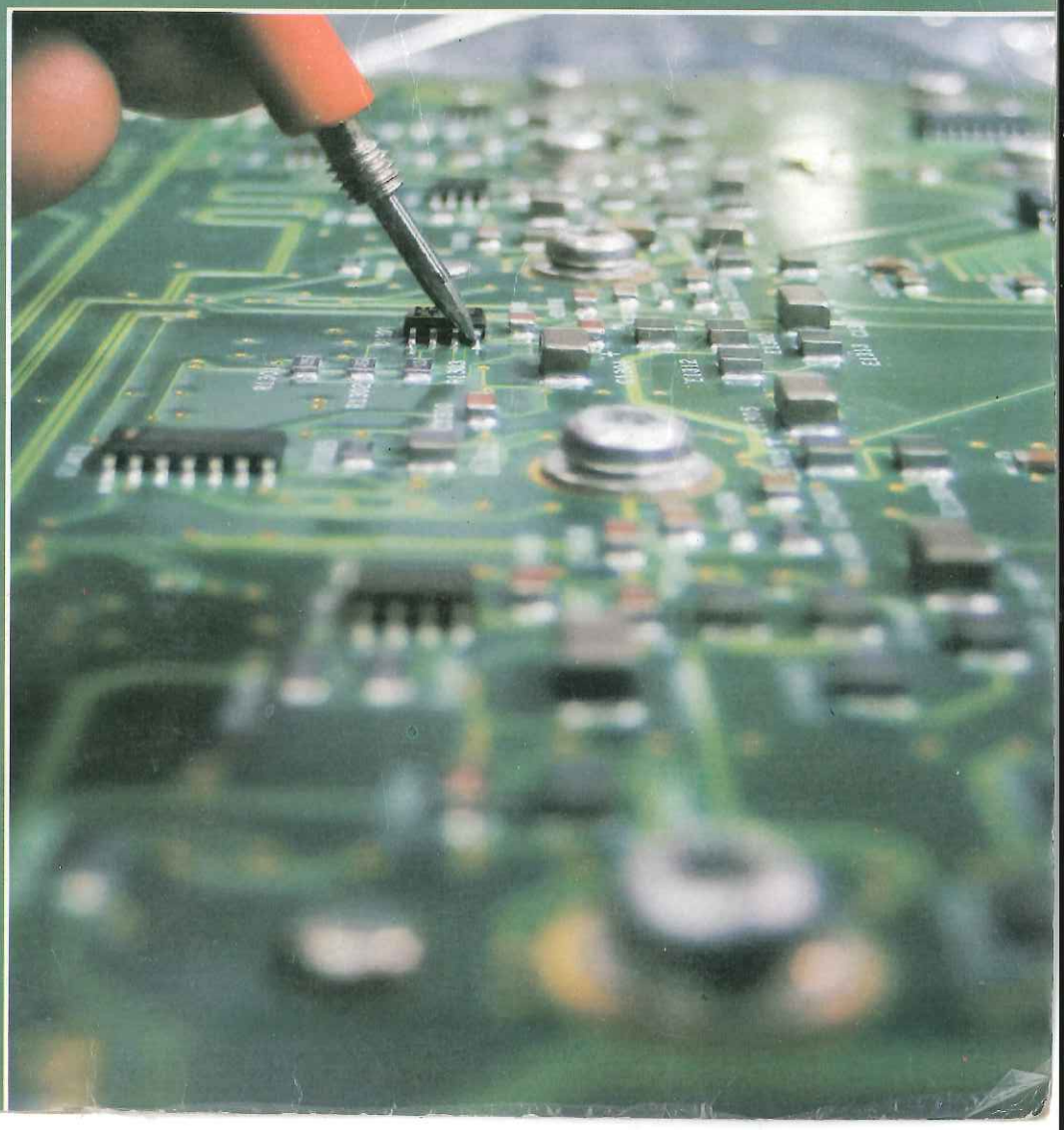

Electronic Principles

Seventh Edition

Albert Malvino

David J. Bates

Dedication

Electronic Principles, 7th ed. is dedicated to my family and friends who have been so supportive during this process and especially to Jackie, whose patience and skills helped put this all together.

About the Authors

Albert P. Malvino *was an electronics technician while serving in the U.S. Navy from 1950 to 1954. He graduated from the University of Santa Clara Summa Cum Laude in 1959 with a B.S. degree in Electrical Engineering. For the next five years, he worked as an electronics engineer at Microwave Laboratories and at Hewlett-Packard while earning his MSEE from San Jose State University in 1964. He taught at Foothill College for the next four years and was awarded a National Science Foundation Fellowship in 1968. After receiving a Ph.D. in Electrical Engineering from Stanford University in 1970, Dr. Malvino embarked on a full-time writing career. He has written 10 textbooks that have been translated into 20 foreign languages with over 108 editions. Dr. Malvino is currently a consultant and designs microcontroller circuits for SPD-Smart™ windows. In addition, he is writing educational software for electronics technicians and engineers. He also serves on the Board of Directors of Research Frontiers Incorporated. His website address is www.malvino.com.*

David J. Bates *is an instructor in the Electronic Technologies Department of Western Wisconsin Technical College located in La Crosse, Wisconsin. Along with working as an electronic servicing technician and as an electrical engineering technician, he has over 25 years of teaching experience.*

Credentials include an A.S. degree in Industrial Electronics Technology, B.S. degree in Industrial Education, and an M.S. degree in Vocational/Technical Education. Certifications include an FCC GROL license, A+ certification as a computer hardware technician, and a Journeyman Level certification as a Certified Electronics Technician (CET) by the International Society of Certified Electronics Technicians (ISCET). David J. Bates is presently a certification administrator (CA) for ISCET and has served as a member of the ISCET Board of Directors, along with serving as a Subject Matter Expert (SME) of basic electronics for the National Coalition for Electronics Education (NCEE).

David J. Bates is also a co-author of "Basic Electricity" a text-lab manual by Zbar, Rockmaker, and Bates.

Contents

Preface x

Chapter 1 Introduction 2

1-1 The Three Kinds of Formulas
1-2 Approximations
1-3 Voltage Sources
1-4 Current Sources
1-5 Thevenin's Theorem
1-6 Norton's Theorem
1-7 Troubleshooting

Chapter 2 Semiconductors 28

2-1 Conductors
2-2 Semiconductors
2-3 Silicon Crystals
2-4 Intrinsic Semiconductors
2-5 Two Types of Flow
2-6 Doping a Semiconductor
2-7 Two Types of Extrinsic Semiconductors
2-8 The Unbiased Diode
2-9 Forward Bias
2-10 Reverse Bias
2-11 Breakdown
2-12 Energy Levels
2-13 The Energy Hill
2-14 Barrier Potential and Temperature
2-15 Reverse-Biased Diode

Chapter 3 Diode Theory 58

3-1 Basic Ideas
3-2 The Ideal Diode
3-3 The Second Approximation
3-4 The Third Approximation
3-5 Troubleshooting
3-6 Up-Down Circuit Analysis
3-7 Reading a Data Sheet
3-8 How to Calculate Bulk Resistance
3-9 DC Resistance of a Diode
3-10 Load Lines
3-11 Surface-Mount Diodes

Chapter 4 Diode Circuits 88

4-1 The Half-Wave Rectifier
4-2 The Transformer
4-3 The Full-Wave Rectifier
4-4 The Bridge Rectifier
4-5 The Choke-Input Filter
4-6 The Capacitor-Input Filter
4-7 Peak Inverse Voltage and Surge Current
4-8 Other Power-Supply Topics
4-9 Troubleshooting
4-10 Clippers and Limiters
4-11 Clampers
4-12 Voltage Multipliers

Chapter 5 Special-Purpose Diodes 142

5-1 The Zener Diode
5-2 The Loaded Zener Regulator
5-3 Second Approximation of a Zener Diode
5-4 Zener Drop-Out Point
5-5 Reading a Data Sheet
5-6 Troubleshooting
5-7 Load Lines
5-8 Optoelectronic Devices
5-9 The Schottky Diode
5-10 The Varactor
5-11 Other Diodes

Chapter 6 Bipolar Junction Transistors 188

6-1 The Unbiased Transistor
6-2 The Biased Transistor
6-3 Transistor Currents
6-4 The CE Connection
6-5 The Base Curve
6-6 Collector Curves
6-7 Transistor Approximations
6-8 Reading Data Sheets
6-9 Surface-Mount Transistors
6-10 Troubleshooting

Chapter 7 Transistor Fundamentals 222

7-1 Variations in Current Gain
7-2 The Load Line
7-3 The Operating Point
7-4 Recognizing Saturation
7-5 The Transistor Switch
7-6 Emitter Bias
7-7 LED Drivers
7-8 The Effect of Small Changes
7-9 Troubleshooting
7-10 More Optoelectronic Devices

Chapter 8 Transistor Biasing 260

8-1 Voltage-Divider Bias
8-2 Accurate VDB Analysis
8-3 VDB Load Line and *Q* Point
8-4 Two-Supply Emitter Bias
8-5 Other Types of Bias
8-6 Troubleshooting
8-7 *PNP* Transistors

Chapter 9 AC Models 286

9-1 Base-Biased Amplifier
9-2 Emitter-Biased Amplifier
9-3 Small-Signal Operation
9-4 AC Beta
9-5 AC Resistance of the Emitter Diode
9-6 Two Transistor Models
9-7 Analyzing an Amplifier
9-8 AC Quantities on the Data Sheet

Chapter 10 Voltage Amplifiers 318

10-1 Voltage Gain
10-2 The Loading Effect of Input Impedance
10-3 Multistage Amplifiers
10-4 Swamped Amplifier
10-5 Two-Stage Feedback
10-6 Troubleshooting

Chapter 11 CC and CB Amplifiers 344

11-1 CC Amplifier
11-2 Output Impedance
11-3 Cascading CE and CC
11-4 Darlington Connections
11-5 Voltage Regulation
11-6 The Common-Base Amplifier

Chapter 12 Power Amplifiers 376

12-1 Amplifier Terms
12-2 Two Load Lines
12-3 Class A Operation
12-4 Class B Operation
12-5 Class B Push-Pull Emitter Follower
12-6 Biasing Class B/AB Amplifiers
12-7 Class B/AB Driver
12-8 Class C Operation
12-9 Class C Formulas
12-10 Transistor Power Rating

Chapter 13 JFETs 424

13-1 Basic Ideas
13-2 Drain Curves
13-3 The Transconductance Curve
13-4 Biasing in the Ohmic Region
13-5 Biasing in the Active Region
13-6 Transconductance
13-7 JFET Amplifiers
13-8 The JFET Analog Switch
13-9 Other JFET Applications
13-10 Reading Data Sheets
13-11 JFET Testing

Chapter 14 MOSFETs 478

14-1 The Depletion-Mode MOSFET
14-2 D-MOSFET Curves
14-3 Depletion-Mode MOSFET Amplifiers
14-4 The Enhancement-Mode MOSFET
14-5 The Ohmic Region
14-6 Digital Switching
14-7 CMOS
14-8 Power FETs
14-9 E-MOSFET Amplifiers
14-10 MOSFET Testing

Chapter 15 Thyristors 520

15-1 The Four-Layer Diode
15-2 The Silicon Controlled Rectifier
15-3 The SCR Crowbar
15-4 SCR Phase Control
15-5 Bidirectional Thyristors
15-6 IGBTs
15-7 Other Thyristors
15-8 Troubleshooting

Chapter 16 Frequency Effects 562

16-1 Frequency Response of an Amplifier
16-2 Decibel Power Gain
16-3 Decibel Voltage Gain
16-4 Impedance Matching
16-5 Decibels above a Reference
16-6 Bode Plots
16-7 More Bode Plots
16-8 The Miller Effect
16-9 Risetime-Bandwidth Relationship
16-10 Frequency Analysis of BJT Stages
16-11 Frequency Analysis of FET Stages
16-12 Frequency Effects of Surface-Mount Circuits

Chapter 17 Differential Amplifiers 618

17-1 The Differential Amplifier
17-2 DC Analysis of a Diff Amp
17-3 AC Analysis of a Diff Amp
17-4 Input Characteristics of an Op Amp
17-5 Common-Mode Gain
17-6 Integrated Circuits
17-7 The Current Mirror
17-8 The Loaded Diff Amp

Chapter 18 Operational Amplifiers 660

18-1 Introduction to Op Amps
18-2 The 741 Op Amp
18-3 The Inverting Amplifier
18-4 The Noninverting Amplifier
18-5 Two Op-Amp Applications
18-6 Linear ICs
18-7 Op Amps as Surface-Mount Devices

Chapter 19 Negative Feedback 704

19-1 Four Types of Negative Feedback
19-2 VCVS Voltage Gain
19-3 Other VCVS Equations
19-4 The ICVS Amplifier
19-5 The VCIS Amplifier
19-6 The ICIS Amplifier
19-7 Bandwidth

Chapter 20 Linear Op-Amp Circuits 734

20-1 Inverting-Amplifier Circuits
20-2 Noninverting-Amplifier Circuits
20-3 Inverter/Noninverter Circuits
20-4 Differential Amplifiers
20-5 Instrumentation Amplifiers
20-6 Summing Amplifier Circuits
20-7 Current Boosters
20-8 Voltage-Controlled Current Sources
20-9 Automatic Gain Control
20-10 Single-Supply Operation

Chapter 21 Active Filters 782

21-1 Ideal Responses
21-2 Approximate Responses
21-3 Passive Filters
21-4 First-Order Stages
21-5 VCVS Unity-Gain Second-Order Low-Pass Filters
21-6 Higher-Order Filters
21-7 VCVS Equal-Component Low-Pass Filters
21-8 VCVS High-Pass Filters
21-9 MFB Bandpass Filters
21-10 Bandstop Filters
21-11 The All-Pass Filter
21-12 Biquadratic and State-Variable Filters

Chapter 22 Nonlinear Op-Amp Circuits 842

22-1 Comparators with Zero Reference
22-2 Comparators with Nonzero References
22-3 Comparators with Hysteresis
22-4 Window Comparator
22-5 The Integrator
22-6 Waveform Conversion
22-7 Waveform Generation
22-8 Another Triangular Generator
22-9 Active Diode Circuits
22-10 The Differentiator
22-11 Class-D Amplifier

Chapter 23 Oscillators 890

23-1 Theory of Sinusoidal Oscillation
23-2 The Wien-Bridge Oscillator
23-3 Other *RC* Oscillators
23-4 The Colpitts Oscillator
23-5 Other *LC* Oscillators
23-6 Quartz Crystals
23-7 The 555 Timer
23-8 Astable Operation of the 555 Timer
23-9 555 Circuits
23-10 The Phase-Locked Loop
23-11 Function Generator ICs

Chapter 24 Regulated Power Supplies 946

24-1 Supply Characteristics
24-2 Shunt Regulators
24-3 Series Regulators
24-4 Monolithic Linear Regulators
24-5 Current Boosters
24-6 DC-to-DC Converters
24-7 Switching Regulators

Appendix A Data Sheets 994

Appendix B Mathematical Derivations 1046

Appendix C MultiSim Primer 1052

Appendix D Thevenizing the R/2R D/A Converter 1085

Appendix E Summary Table Listing 1087

Glossary 1088

Answers Odd-Numbered Problems 1101

Index 1107

Preface

Electronic Principles, seventh edition, continues its tradition as a clearly explained, in-depth introduction to electronic semiconductor devices and circuits. This textbook is intended for students who are taking their first course in linear electronics. The prerequisites are a DC/AC Circuits course, algebra, and some trigonometry.

Electronic Principles provides essential understanding of semiconductor device characteristics, testing, and the practical circuits in which they are found. The text provides clearly explained concepts—written in an easy-to-read conversational style—establishing the foundation needed for understanding the operation and troubleshooting of electronic systems. Practical circuit examples and troubleshooting exercises are found throughout the chapters.

New to This Edition

Based on the feedback from extensive reviewing and course research, the seventh edition of *Electronic Principles* contains enhanced material on a variety of electronic devices and circuits, including:

- additional PNP transistor coverage,
- basic Bipolar Junction Transistor (BJT) voltage-divider circuit design
- increased ac load line analysis of BJT power amplifiers
- power E-MOSFET and D-MOSFET biasing
- Insulated Gate Bipolar Transistors (IGBTs)
- R/2R ladder D/A converters
- Function generator integrated circuits
- Class-D amplifiers

Starting in Chapter 1, "Introduction," the **T-shooter** troubleshooting exercise feature has been simplified for easier student use and understanding. This practical feature is integrated throughout the remaining chapters. In Chapter 2, "Semiconductors," one of many **"Summary Tables"** has been added to provide concept reinforcement and a convenient information resource. Starting in Chapter 3, "Diode Theory," **data sheets** for specific semiconductor devices will be found within the chapter as they are discussed. Chapters 4 through 6 have additional content regarding the testing of diodes and transistors using DMMs, VOMs, and semiconductor curve tracers. While Chapter 10, "Voltage Amplifiers," retains its coverage

of the common-emitter (CE) amplifier, Chapter 11, "CC and CB Amplifiers," focuses on common-collector (CC) or emitter follower, common-base (CB), and Darlington amplifier configurations. Chapter 12, "Power Amplifiers," has been modified to include class A, B, AB and C power amplifiers, along with additional ac load line analysis. In Chapter 13, "JFETs," modifications have been made to the order of JFET biasing and biasing techniques. In Chapter 14, "MOSFETs," depletion-mode and power enhancement-mode MOSFET amplifiers have been added along with MOSFET testing. Chapter 15, "Thyristors," includes more detail in RC phase-shift control, SCR testing, and introduces IGBTs. Frequency analysis of FET stages has been added to Chapter 16, "Frequency Effects." In Chapter 20, "Linear Op-Amp Circuits," the circuit operation of the R/2R ladder D/A converter has been included. Chapter 22, "Nonlinear Op-Amp Circuits," now includes the basic operation of a class-D amplifier. Also, Chapter 23, "Oscillators," has an additional section on function generator ICs, including the XR-2206.

Acknowledgements

The production of *Electronic Principles*, seventh edition, is truly a team effort. It requires the hard work and professional dedication of a large number of people. Thank you to everyone at McGraw-Hill Higher Education who contributed to this edition, especially Tom Casson, Jonathan Plant, Lindsay Roth, Kay Brimeyer, and Carol Krommingа. Special thanks should also go out to Pat Hoppe whose insights, careful review, and tremendous work on the MultiSim files has been a significant contribution to this textbook.

Thanks to everyone whose comments and suggestions were extremely valuable in the development of this edition. This includes those who took the time to respond to surveys prior to manuscript development and those who carefully reviewed the revised material. Every survey and review was carefully examined and has contributed greatly to this edition. Here is a list of the reviewers who helped make this edition comprehensive and relevant.

Current Edition Reviewers

Ron Barrier
Rowan Cabarrus Community College, NC

Adrien Berthiaume
Northern Essex Community College, MA

M. C. Greenfield
Indiana State University, IN

Craig Hill
Erie Institute of Technology, PA

Patrick Hoppe
Gateway Technical College, WI

Paul Kiser
National Institute of Technology, WV

Dan Lookadoo
New River Community College, VA

William Murray
Broome Community College, NY

Rina Mazzucco
Mesa Community College, AZ

Rajappa Papannareddy
Purdue University, IN

Ken White
Lakeland Community College, OH

Survey Respondents

Ben Bartlett
College of Southern Idaho, ID

Michele J. Chance
Rowan-Cabarrus Community College, NC

Walter O. Craig, III
Southern University, LA

Sheila Donchoo
Southern Polytechnic State University, GA

James A. Duru
Essex County College, NJ

William Eaton
Hinds Community College, MS

Udezei F. Edgal
North Carolina A&T State University, NC

Glen Elliott
Cambria County Area Community College, PA

Fred Etcheverry
Hartnell College, CA

Jim Fiore
Mohawk Valley Community College, NY

Rex Fisher
Brigham Young University, ID

John E. Fitzen
Idaho State University, ID

George Fredericks
Northeast State Technical Community College, TN

G. J. Gerard
Gateway Community Technical College, CT

Albert Gerth
Corning Community College, NY

Melvin G. Gomez
Green River Community College, WA

James Henderson
Arkansas State University, AR

George Hendricks
Gaston College, NC

Larry Hoffman
Purdue University, IN
David A. Kruse
Lane Community College, OR
Daniel Landiss
St. Louis Community College, MO
M. David Luneau, Jr.
University of Arkansas, AR
Richard McKinney
Nashville State Technical Community College, TN
Paul Nelson
College of the Sequoias, CA
Robert Peeler
Lamar State College, TX
Nasser H. Rashidi
Virginia State University, VA
Steven D. Rice
University of Montana, MT
Robert J. Scoff
University of Memphis, TN
Ron Tinckham
Santa Fe Community College, FL
Anthony Webb
Missouri Tech, MO
Harold Wiebe
Northern Kentucky University, KY
Michael Wilson
Kansas State University, KS

Manuscript Reviewers

Abraham Falsafi
National Institute of Technology, WV
Mohamed Haj-Mohamadi
North Carolina A&T University, NC
Patrick Hoppe
Gateway Technical College, WI
John Lindsey
Kansas Community and Technical College System, KS
Jim Ramming
Vatterott College, MO
Vince Vasco
Pittsburgh Technical Institute, PA

Electronic Principles

chapter 1

Introduction

The topics in this chapter include formulas, voltage sources, current sources, two circuit theorems, and troubleshooting. Although some of the discussion will be review, you will find new ideas that can make it easier for you to understand semiconductor devices and to serve as a framework for the rest of the textbook.

Objectives

After studying this chapter, you should be able to:

- Name the three types of formulas and explain why each is true.
- Explain why approximations are often used instead of exact formulas.
- Define an ideal voltage source and an ideal current source.
- Describe how to recognize a stiff voltage source and a stiff current source.
- State Thevenin's theorem and apply it to a circuit.
- State Norton's theorem and apply it to a circuit.
- List two facts about an open device and two facts about a shorted device.

Chapter Outline

1-1 The Three Kinds of Formulas
1-2 Approximations
1-3 Voltage Sources
1-4 Current Sources
1-5 Thevenin's Theorem
1-6 Norton's Theorem
1-7 Troubleshooting

Vocabulary

cold-solder joint
definition
derivation
duality principle
formula
ideal (first) approximation
law
Norton current
Norton resistance
open device
second approximation
shorted device
solder bridge
theorem
Thevenin resistance
Thevenin voltage
third approximation
troubleshooting

1-1 The Three Kinds of Formulas

A **formula** is a rule that relates quantities. The rule may be an equation, an inequality, or other mathematical description. You will see many formulas in this book. Unless you know why each one is true, you may become confused as they accumulate. Fortunately, there are only three ways formulas can come into existence. Knowing what they are will make your study of electronics more logical and satisfying.

GOOD TO KNOW

For all practical purposes, a formula is like a set of instructions written in mathematical shorthand. A formula describes how to go about calculating a particular quantity or parameter.

The Definition

When you study electricity and electronics, you have to memorize new words like *current, voltage,* and *resistance.* However, a verbal explanation of these words is not enough. Why? Because your idea of current must be mathematically identical to everyone else's. The only way to get this identity is with a **definition,** a formula invented for a new concept.

Here is an example of a definition. In your earlier course work, you learned that capacitance equals the charge on one plate divided by the voltage between plates. The formula looks like this:

$$C = \frac{Q}{V}$$

This formula is a definition. It tells you what capacitance C is and how to calculate it. Historically, some researcher made up this definition and it became widely accepted.

Here is an example of how to create a new definition out of thin air. Suppose we are doing research on reading skills and need some way to measure reading speed. Out of the blue, we might decide to define *reading speed* as the number of words read in a minute. If the number of words is W and the number of minutes is M, we could make up a formula like this:

$$S = \frac{W}{M}$$

In this equation, S is the speed measured in words per minute.

To be fancy, we could use Greek letters: ω for words, μ for minutes, and σ for speed. Our definition would then look like this:

$$\sigma = \frac{\omega}{\mu}$$

This equation still translates to speed equals words divided by minutes. When you see an equation like this and know that it is a definition, it is no longer as impressive and mysterious as it initially appears to be.

In summary, *definitions are formulas that a researcher creates.* They are based on scientific observation and form the basis for the study of electronics. They are simply accepted as facts. It's done all the time in science. A definition is true in the same sense that a word is true. Each represents something we want to talk about. When you know which formulas are definitions, electronics is easier to understand. Because definitions are starting points, all you need to do is to understand and memorize them.

The Law

A **law** is different. It summarizes a relationship that already exists in nature. Here is an example of a law:

$$f = K\frac{Q_1Q_2}{d^2}$$

where f = force
K = a constant of proportionality, $9(10^9)$
Q_1 = first charge
Q_2 = second charge
d = distance between charges

This is Coulomb's law. It says that the force of attraction or repulsion between two charges is directly proportional to the charges and inversely proportional to the square of the distance between them.

This is an important equation, for it is the foundation of electricity. But where does it come from? And why is it true? To begin with, all the variables in this law existed before its discovery. By experiment, Coulomb was able to prove that the force was directly proportional to each charge and inversely proportional to the square of the distance between the charges. Coulomb's law is an example of a relationship that exists in nature. Although earlier researchers could measure f, Q_1, Q_2, and d, Coulomb discovered the law relating the quantities and wrote a formula for it.

Before discovering a law, someone may have a hunch that such a relationship exists. After a number of experiments, the researcher writes a formula that summarizes the discovery. When enough people confirm the discovery through experiments, the formula becomes a law. *A law is true because you can verify it with an experiment.*

The Derivation

Given an equation like this:

$$y = 3x$$

we can add 5 to both sides to get:

$$y + 5 = 3x + 5$$

The new equation is true because both sides are still equal. There are many other operations like subtraction, multiplication, division, factoring, and substitution that preserve the equality of both sides of the equation. For this reason, we can derive many new formulas using mathematics.

A **derivation** *is a formula that we can get from other formulas.* This means that we start with one or more formulas and, using mathematics, arrive at a new formula not in our original set of formulas. A derivation is true because mathematics preserves the equality of both sides of every equation between the starting formula and the derived formula.

For instance, Ohm was experimenting with conductors. He discovered that the ratio of voltage to current was a constant. He named this constant *resistance* and wrote the following formula for it:

$$R = \frac{V}{I}$$

This is the original form of Ohm's law. By rearranging it, we can get:

$$I = \frac{V}{R}$$

This is a derivation. It is the original form of Ohm's law converted to another equation.

Here is another example. The definition for capacitance is:

$$C = \frac{Q}{V}$$

We can multiply both sides by V to get the following new equation:

$$Q = CV$$

This is a derivation. It says that the charge on a capacitor equals its capacitance times the voltage across it.

What to Remember

Why is a formula true? There are three possible answers. To build your understanding of electronics on solid ground, classify each new formula in one of these three categories:

Definition: A formula invented for a new concept
Law: A formula for a relationship in nature
Derivation: A formula produced with mathematics

1-2 Approximations

We use approximations all the time in everyday life. If someone asks you how old you are, you might answer 21 (ideal). Or you might say 21 going on 22 (second approximation). Or, maybe, 21 years and 9 months (third approximation). Or, if you want to be more accurate, 21 years, 9 months, 2 days, 6 hours, 23 minutes, and 42 seconds (exact).

The foregoing illustrates different levels of approximation: an ideal approximation, a second approximation, a third approximation, and an exact answer. The approximation to use will depend on the situation. The same is true in electronics work. In circuit analysis, we need to choose an approximation that fits the situation.

The Ideal Approximation

Did you know that 1 ft of AWG 22 wire that is 1 in from a chassis has a resistance of 0.016 Ω, an inductance of 0.24 μH, and a capacitance of 3.3 pF? If we had to include the effects of resistance, inductance, and capacitance in every calculation for current, we would spend too much time on calculations. This is why everybody ignores the resistance, inductance, and capacitance of connecting wires in most situations.

The **ideal approximation,** sometimes called the **first approximation,** is the simplest equivalent circuit for a device. For instance, the ideal approximation of a piece of wire is a conductor of zero resistance. This ideal approximation is adequate for everyday electronics work.

The exception occurs at higher frequencies, where you have to consider the inductance and capacitance of the wire. Suppose 1 in of wire has an inductance of 0.24 μH and a capacitance of 3.3 pF. At 10 MHz, the inductive reactance is 15.1 Ω, and the capacitive reactance is 4.82 kΩ. As you see, a circuit designer can no longer idealize a piece of wire. Depending on the rest of the circuit, the inductance and capacitive reactances of a connecting wire may be important.

As a guideline, we can idealize a piece of wire at frequencies under 1 MHz. This is usually a safe rule of thumb. But it does not mean that you can be careless about wiring. In general, keep connecting wires as short as possible, because at some point on the frequency scale, those wires will begin to degrade circuit performance.

When you are troubleshooting, the ideal approximation is usually adequate because you are looking for large deviations from normal voltages and currents. In this book, we will idealize semiconductor devices by reducing them to simple equivalent circuits. With ideal approximations, it is easier to analyze and understand how semiconductor circuits work.

The Second Approximation

The ideal approximation of a flashlight battery is a voltage source of 1.5 V. The **second approximation** adds one or more components to the ideal approximation. For instance, the second approximation of a flashlight battery is a voltage source of 1.5 V and a series resistance of 1 Ω. This series resistance is called the *source* or *internal* resistance of the battery. If the load resistance is less than 10 Ω, the load voltage will be noticeably less than 1.5 V because of the voltage drop across the source resistance. In this case, accurate calculations must include the source resistance.

The Third Approximation and Beyond

The **third approximation** includes another component in the equivalent circuit of the device. Chapter 3 will give you an example of the third approximation when we discuss semiconductor diodes.

Even higher approximations are possible with many components in the equivalent circuit of a device. Hand calculations using these higher approximations can become very difficult and time-consuming. Because of this, computers using circuit simulation software are often used. For instance, MultiSim by Electronics Workbench (EWB) and PSpice are commercially available computer programs that use higher approximations to analyze semiconductor circuits. Many of the circuits and examples in this book can be analyzed and demonstrated using this type of software.

Conclusion

Which approximation to use depends on what you are trying to do. If you are troubleshooting, the ideal approximation is usually adequate. For many situations, the second approximation is the best choice because it is easy to use and does not require a computer. For higher approximations, you should use a computer and a program like MultiSim.

1-3 Voltage Sources

An *ideal dc voltage source* produces a load voltage that is constant. The simplest example of an ideal dc voltage source is a perfect battery, one whose internal resistance is zero. Figure 1-1*a* shows an ideal voltage source connected to a variable load resistance of 1 Ω to 10 MΩ. The voltmeter reads 10 V, exactly the same as the source voltage.

Figure 1-1*b* shows a graph of load voltage versus load resistance. As you can see, the load voltage remains fixed at 10 V when the load resistance changes from 1 Ω to 1 MΩ. In other words, an ideal dc voltage source produces a constant load voltage, regardless of how small or large the load resistance is. With an ideal voltage source, only the load current changes when the load resistance changes.

Figure 1–1 (*a*) Ideal voltage source and variable load resistance; (*b*) load voltage is constant for all load resistances.

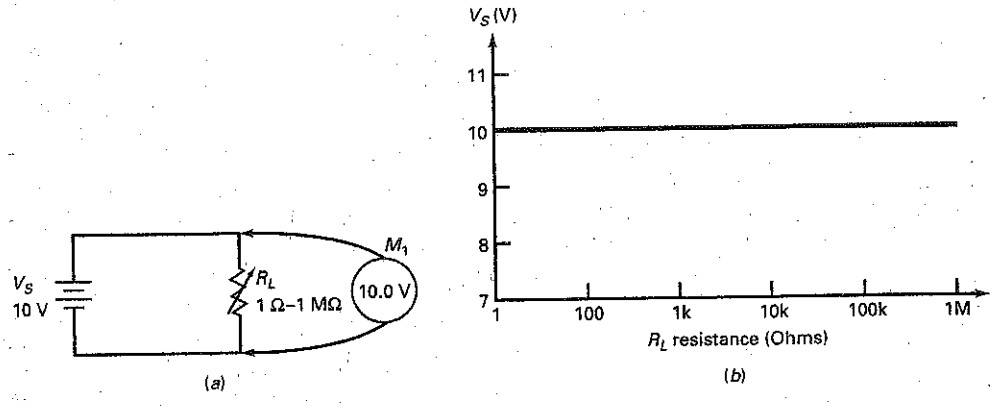

Second Approximation

An ideal voltage source is a theoretical device; it cannot exist in nature. Why? When the load resistance approaches zero, the load current approaches infinity. No real voltage source can produce infinite current because a real voltage source always has some internal resistance. The second approximation of a dc voltage source includes this internal resistance.

Figure 1-2*a* illustrates the idea. A source resistance R_S of 1 Ω is now in series with the ideal battery. The voltmeter reads 5 V when R_L is 1 Ω. Why? Because the load current is 10 V divided by 2 Ω, or 5 A. When 5 A flows through the source resistance of 1 Ω, it produces an internal voltage drop of 5 V. This is why the load voltage is only half of the ideal value, with the other half being dropped across the internal resistance.

Figure 1-2*b* shows the graph of load voltage versus load resistance. In this case, the load voltage does not come close to the ideal value until the load resistance is much greater than the source resistance. But what does *much greater* mean? In other words, when can we ignore the source resistance?

Figure 1–2 (*a*) Second approximation includes source resistance; (*b*) load voltage is constant for large load resistances.

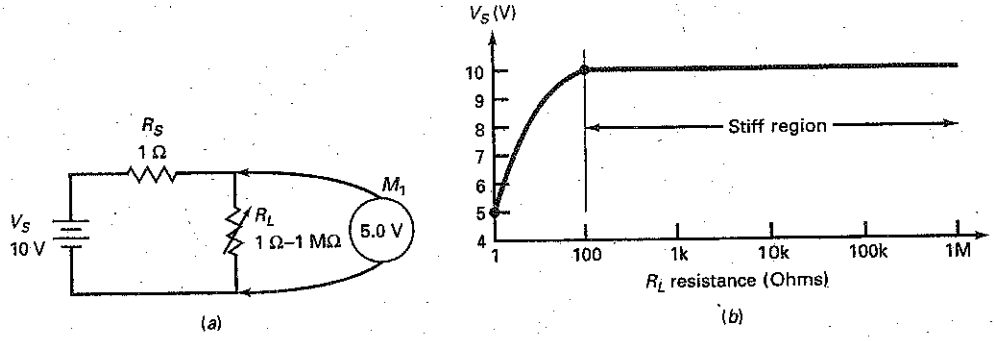

Figure 1–3 Stiff region occurs when load resistance is large enough.

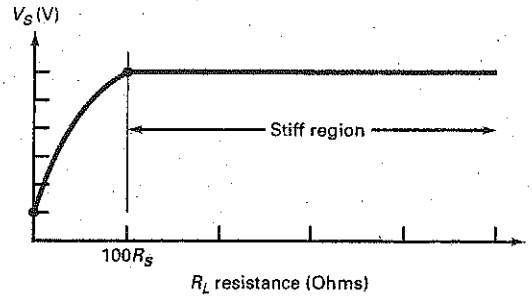

Stiff Voltage Source

Now is the time when a new definition can be useful. So, let us invent one. We can ignore the source resistance when it is at least 100 times smaller than the load resistance. Any source that satisfies this condition is a *stiff voltage source.* As a definition,

$$\textbf{Stiff voltage source: } R_S < 0.01R_L \tag{1-1}$$

This formula defines what we mean by a *stiff voltage source.* The boundary of the inequality (where < is changed to =) gives us the following equation:

$$R_S = 0.01R_L$$

Solving for load resistance gives the minimum load resistance we can use and still have a stiff source:

$$R_{L(\text{min})} = 100R_S \tag{1-2}$$

In words, the minimum load resistance equals 100 times the source resistance.

Equation (1-2) is a derivation. We started with the definition of a stiff voltage source and rearranged it to get the minimum load resistance permitted with a stiff voltage source. As long as the load resistance is greater than $100R_S$, the voltage source is stiff. When the load resistance equals this worst-case value, the calculation error from ignoring the source resistance is 1 percent, small enough to ignore in a second approximation.

Figure 1-3 visually summarizes a stiff voltage source. The load resistance has to be greater than $100R_S$ for the voltage source to be stiff.

Example 1-1

The definition of a stiff voltage source applies to ac sources as well as to dc sources. Suppose an ac voltage source has a source resistance of 50 Ω. For what load resistance is the source stiff?

SOLUTION Multiply by 100 to get the minimum load resistance:

$$R_L = 100R_S = 100(50\ \Omega) = 5\ \text{k}\Omega$$

As long as the load resistance is greater than 5 kΩ, the ac voltage source is stiff and we can ignore the internal resistance of the source.

A final point. Using the second approximation for an ac voltage source is valid only at low frequencies. *At high frequencies, additional factors such as lead inductance and stray capacitance come into play.* We will deal with these high-frequency effects in a later chapter.

PRACTICE PROBLEM 1-1 If the ac source resistance in Example 1-1 is 600 Ω, for what load resistance is the source stiff?

GOOD TO KNOW

A well-regulated power supply is a good example of a stiff voltage source.

1-4 Current Sources

A dc voltage source produces a constant load voltage for different load resistances. A *dc current source* is different. It produces a constant load current for different load resistances. An example of a dc current source is a battery with a large source resistance (Fig. 1-4*a*). In this circuit, the source resistance is 1 MΩ and the load current is:

$$I_L = \frac{V_S}{R_S + R_L}$$

When R_L is 1 Ω in Fig. 1-4*a*, the load current is:

$$I_L = \frac{10\text{ V}}{1\text{ M}\Omega + 1\ \Omega} = 10\ \mu\text{A}$$

GOOD TO KNOW

At the output terminals of a constant current source, the load voltage V_L increases in direct proportion to the load resistance.

In this calculation, the small load resistance has an insignificant effect on the load current.

Figure 1-4*b* shows the effect of varying the load resistance from 1 Ω to 1 MΩ. In this case, the load current remains constant at 10 μA over a large range. It is only when the load resistance is greater than 10 kΩ that a noticeable drop-off occurs in load current.

Figure 1-4 (*a*) Simulated current source with a dc voltage source and a large resistance; (*b*) load current is constant for small load resistances.

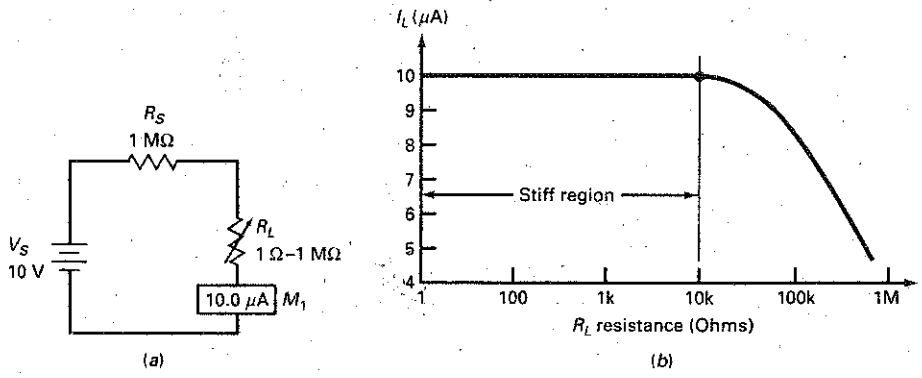

Stiff Current Source

Here is another definition that will be useful, especially with semiconductor circuits. We will ignore the source resistance of a current source when it is at least 100 times larger than the load resistance. Any source that satisfies this condition is a *stiff current source*. As a definition:

$$\textbf{Stiff current source: } R_S > 100R_L \tag{1-3}$$

The upper boundary is the worst case. At this point:

$$R_S = 100R_L$$

Solving for load resistance gives the maximum load resistance we can use and still have a stiff current source:

$$R_{L(max)} = 0.01R_S \tag{1-4}$$

In words: The maximum load resistance equals 1/100 of the source resistance.

Equation (1-4) is a derivation, because we started with the definition of a stiff current source and rearranged it to get the maximum load resistance. When the load resistance equals this worst-case value, the calculation error is 1 percent, small enough to ignore in a second approximation.

Figure 1-5 shows the stiff region. As long as the load resistance is less than $0.01R_S$, the current source is stiff.

Schematic Symbol

Figure 1-6*a* is the schematic symbol of an ideal current source, one whose source resistance is infinite. This ideal approximation cannot exist in nature, but it can exist mathematically. Therefore, we can use the ideal current source for fast circuit analysis, as in troubleshooting.

Figure 1-6*a* is a visual definition: It is the symbol for a current source. When you see this symbol, it means that the device produces a constant current I_S. It may help to think of a current source as a pump that pushes out a fixed number of coulombs per second. This is why you will hear expressions like "The current source pumps 5 mA through a load resistance of 1 kΩ."

Figure 1-6*b* shows the second approximation. The internal resistance is in parallel with the ideal current source, not in series as it was with an ideal voltage source. Later in this chapter we will discuss Norton's theorem. You will then see why the internal resistance must be in parallel with the current source. Table 1-1 will help you understand the differences between a voltage source and a current source.

Figure 1–5 Stiff region occurs when load resistance is small enough.

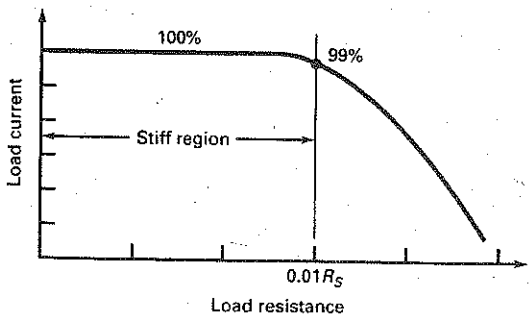

Figure 1–6 (*a*) Schematic symbol of a current source; (*b*) second approximation of a current source.

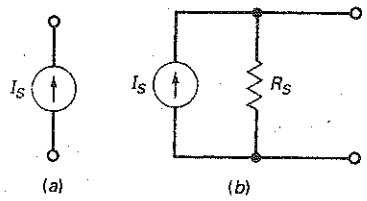

Table 1–1	Properties of Voltage and Current Sources	
Quantity	**Voltage Source**	**Current Source**
R_S	Typically low	Typically high
R_L	Greater than $100R_S$	Less than $0.01R_S$
V_L	Constant	Depends on R_L
I_L	Depends on R_L	Constant

Example 1-2

A current source of 2 mA has an internal resistance of 10 MΩ. Over what range of load resistance is the current source stiff?

SOLUTION Since this is a current source, the load resistance has to be small compared to the source resistance. With the 100:1 rule, the maximum load resistance is:

$$R_{L(\max)} = 0.01(10\ \text{M}\Omega) = 100\ \text{k}\Omega$$

The stiff range for the current source is a load resistance from 0 to 100 kΩ.

Figure 1-7 summarizes the solution. In Fig. 1-7*a*, a current source of 2 mA is in parallel with 10 MΩ and a variable resistor set to 1 Ω. The ammeter measures a load current of 2 mA. When the load resistance changes from 1 Ω to 1 MΩ, as shown in Fig. 1-7*b*, the source remains stiff up to 100 kΩ. At this point, the load current is down about 1 percent from the ideal value. Stated another way, 99 percent of the source current passes through the load resistance. The other 1 percent passes through the source resistance. As the load resistance continues to increase, load current continues to decrease.

Figure 1-7 Solution.

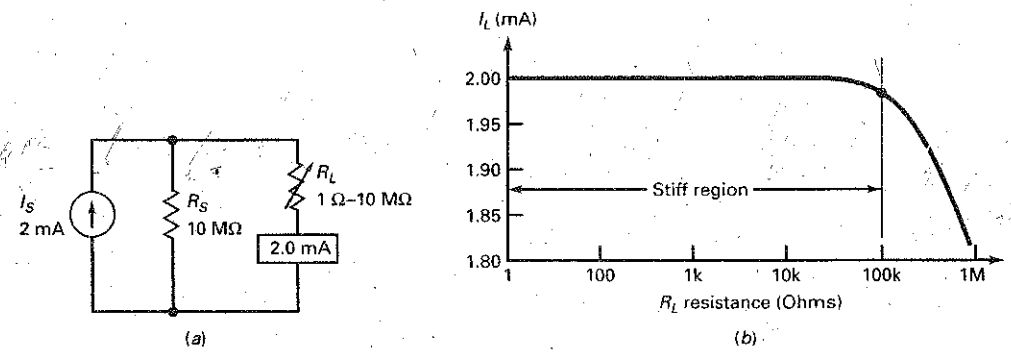

PRACTICE PROBLEM 1-2 What is the load voltage in Fig. 1-7*a* when the load resistance equals 10 kΩ?

Example 1-3

When you analyze transistor circuits, you will visualize a transistor as a current source. In a well-designed circuit, the transistor will act like a stiff current source, so that you can ignore its internal resistance. Then you can calculate the load voltage. For instance, if a transistor is pumping 2 mA through a load resistance of 10 kΩ, the load voltage is 20 V.

1-5 Thevenin's Theorem

Every once in a while, somebody makes a big breakthrough in engineering and carries all of us to a new high. A French engineer, M. L. Thevenin, made one of these quantum leaps when he derived the circuit theorem named after him: Thevenin's theorem.

Definition of Thevenin Voltage and Resistance

A **theorem** is a statement that we can prove mathematically. Because of this, it is not a definition or a law. So, we classify it as a derivation. Recall the following ideas about Thevenin's theorem from earlier courses. In Fig. 1-8*a*, the **Thevenin voltage** V_{TH} is defined as the voltage across the load terminals when the load resistor is open. Because of this, the Thevenin voltage is sometimes called the *open-circuit voltage*. As a definition:

$$\textbf{Thevenin voltage: } V_{TH} = V_{OC} \tag{1-5}$$

The **Thevenin resistance** is defined as the resistance that an ohmmeter measures across the load terminals of Fig. 1-8*a* when all sources are reduced to zero and the load resistor is open. As a definition:

$$\textbf{Thevenin resistance: } R_{TH} = R_{OC} \tag{1-6}$$

With these two definitions, Thevenin was able to derive the famous theorem named after him.

There is a subtle point in finding the Thevenin resistance. Reducing a source to zero has different meanings for voltage and current sources. When you reduce a voltage source to zero, you are effectively replacing it by a short because that's the only way to guarantee zero voltage when a current flows through the voltage source. When you reduce a current source to zero, you are effectively replacing it by an open because that's the only way you can guarantee zero current when there is a voltage across the current source. To summarize:

To zero a voltage source, replace it by a short.
To zero a current source, replace it by an open.

Figure 1-8 (*a*) Black box has a linear circuit inside of it; (*b*) Thevenin circuit.

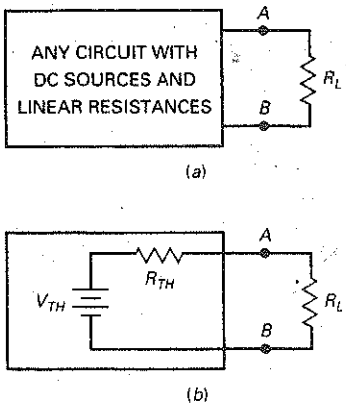

The Derivation

What is Thevenin's theorem? Look at Fig. 1-8*a*. This black box can contain any circuit with dc sources and linear resistances. (A *linear resistance* does not change with increasing voltage.) Thevenin was able to prove that no matter how

complicated the circuit inside the black box of Fig. 1-8*a* was, it would produce exactly the same load current as the simple circuit of Fig. 1-8*b*. As a derivation:

$$I_L = \frac{V_{TH}}{R_{TH} + R_L} \tag{1-7}$$

Let the idea sink in. Thevenin's theorem is a powerhouse tool. Engineers and technicians use the theorem constantly. Electronics could not possibly be where it is today without the Thevenin theorem. It not only simplifies calculations, it enables us to explain circuit operation that would be impossible to explain with only Kirchhoff equations.

Example 1-4

MultiSim

What are the Thevenin voltage and resistance in Fig. 1-9*a*?

SOLUTION First, calculate the Thevenin voltage. To do this, you have to open the load resistor. Opening the load resistance is equivalent to removing it from the circuit, as shown in Fig. 1-9*b*. Since 8 mA flows through 6 kΩ in series with 3 kΩ, 24 V will appear across the 3 kΩ. With no current through the 4 kΩ, 24 V will appear across the *AB* terminals. Therefore:

$$V_{TH} = 24 \text{ V}$$

Second, get the Thevenin resistance. Reducing a dc source to zero is equivalent to replacing it by a short, as shown in Fig. 1-9*c*. If we connect an ohmmeter across the *AB* terminals of Fig. 1-9*c*, what will it read?

It will read 6 kΩ. Why? Because looking back into the *AB* terminals with the battery shorted, the ohmmeter sees 4 kΩ in series with a parallel connection of 3 kΩ and 6 kΩ. We can write:

$$R_{TH} = 4 \text{ k}\Omega + \frac{3\text{k}\Omega \times 6\Omega}{3\text{k}\Omega + 6\text{k}\Omega} = 6 \text{ k}\Omega$$

The product over sum of 3 kΩ and 6 kΩ is 2 kΩ, which, added to 4 kΩ, gives 6 kΩ.

Again, we need a new definition. Parallel connections occur so often in electronics that most people use a shorthand notation for them. From now on, we will use the following notation:

$$\| = \text{in parallel with}$$

Whenever you see two vertical bars in an equation, it means *in parallel with.* In industry, you will see the foregoing equation for Thevenin resistance written like this:

$$R_{TH} = 4 \text{ k}\Omega + (3 \text{ k}\Omega \,\|\, 6 \text{ k}\Omega) = 6 \text{ k}\Omega$$

Most engineers and technicians know that the vertical bars mean *in parallel with.* So, they automatically use product over sum or reciprocal method to calculate the equivalent resistance of 3 kΩ and 6 kΩ.

Figure 1-10 shows the Thevenin circuit with a load resistor. Compare this simple circuit with the original circuit of Fig. 1-9*a*. Can you see how much

Figure 1-9 (*a*) Original circuit; (*b*) open-load resistor to get Thevenin voltage; (*c*) reduce source to zero to get Thevenin resistance.

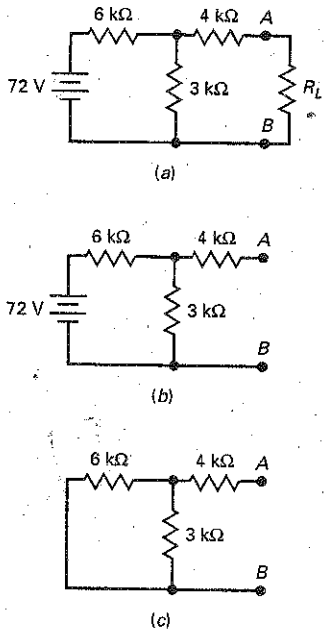

Figure 1-10 Thevenin circuit for Fig. 1-9*a*.

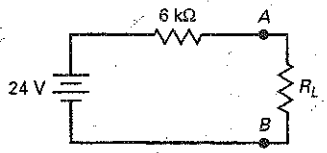

easier it will be to calculate the load current for different load resistances? If not, the next example will drive the point home.

PRACTICE PROBLEM 1-4 Using Thevenin's theorem, what is the load current in Fig. 1-9*a* for the following values of R_L: 2 kΩ, 6 kΩ, and 18 kΩ?

If you really want to appreciate the power of Thevenin's theorem, try calculating the foregoing currents using the original circuit of Fig. 1-9*a* and any other method.

Example 1-5

MultiSim

A *breadboard* is a circuit often built with solderless connections without regard to the final location of parts to prove the feasibility of a design. Suppose you have the circuit of Fig. 1-11*a* breadboarded on a lab bench. How would you measure the Thevenin voltage and resistance?

SOLUTION Start by replacing the load resistor with a multimeter, as shown in Fig. 1-11*b*. After you set the multimeter to read volts, it will indicate 9 V. This is the Thevenin voltage. Next, replace the dc source by a short (Fig. 1-11*c*). Set the multimeter to read ohms, and it will indicate 1.5 kΩ. This is the Thevenin resistance.

Are there any sources of error in the foregoing measurements? Yes, the one thing to watch out for is the input impedance of the multimeter when voltage is measured. Because this input impedance is across the measured terminals, a small current flows through the multimeter. For instance, if you use a moving-coil multimeter, the typical sensitivity is 20 kΩ per volt. On the 10-V range, the voltmeter has an input resistance of 200 kΩ. This will load the circuit down slightly and decrease the load voltage from 9 to 8.93 V.

As a guideline, the input impedance of the voltmeter should be at least 100 times greater than the Thevenin resistance. Then, the loading error is less than 1 percent. *To avoid loading error, use a field-effect transistor (FET) input or digital multimeter (DMM) instead of a moving-coil multimeter.* The input impedance of these instruments is at least 10 MΩ, which usually eliminates loading error.

Figure 1-11 (*a*) Circuit on lab bench; (*b*) measuring Thevenin voltage; (*c*) measuring Thevenin resistance.

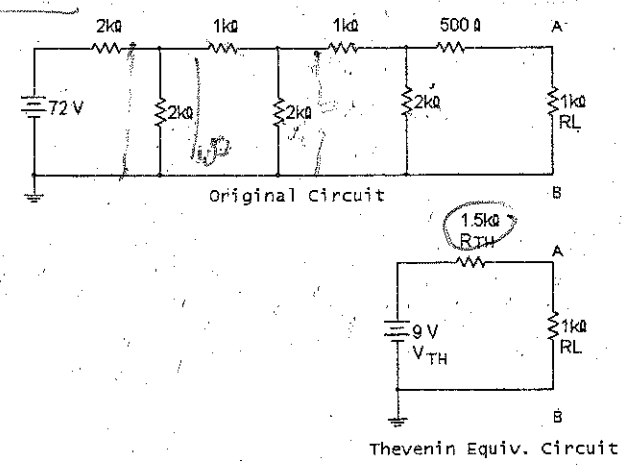

(*a*)

Figure 1-11 (continued)

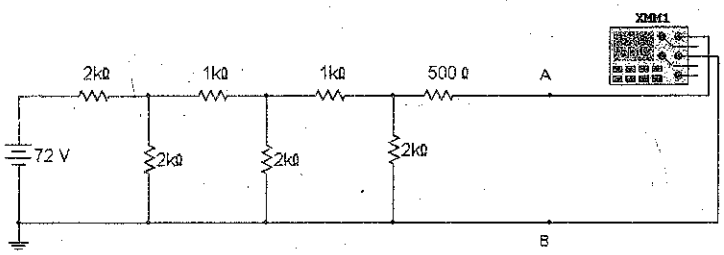

Measuring the Thevenin Voltage

(*b*)

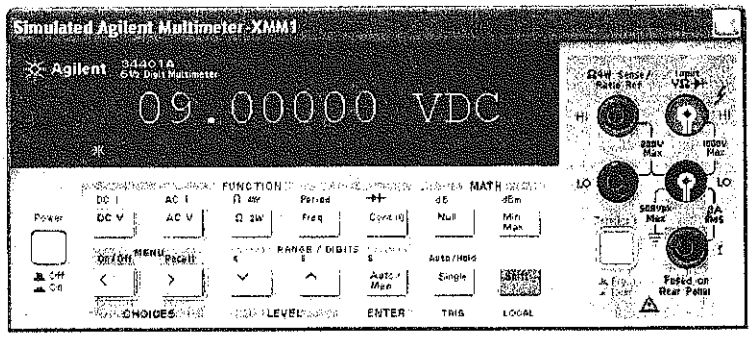

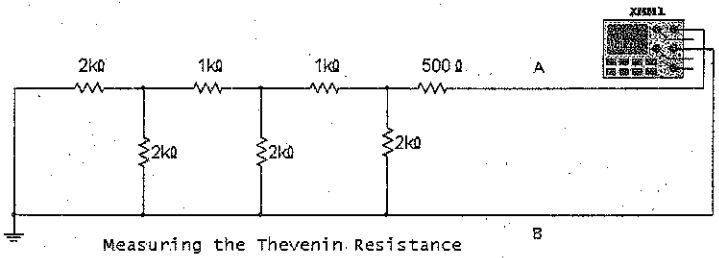

Measuring the Thevenin Resistance

(*c*)

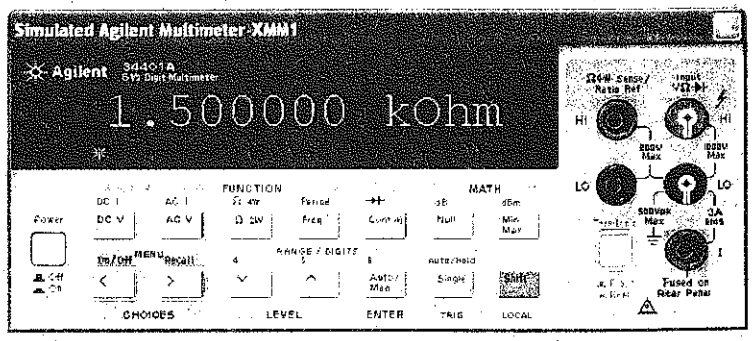

1-6 Norton's Theorem

Recall the following ideas about Norton's theorem from earlier courses. In Fig. 1-12*a*, the Norton current I_N is defined as the load current when the load resistor is shorted. Because of this, the **Norton current** is sometimes called the *short-circuit current.* As a definition:

$$\textbf{Norton current: } I_N = I_{SC} \tag{1-8}$$

The **Norton resistance** is the resistance that an ohmmeter measures across the load terminals when all sources are reduced to zero and the load resistor is open. As a definition:

$$\textbf{Norton resistance: } R_N = R_{OC} \tag{1-9}$$

Since Thevenin resistance also equals R_{OC}, we can write:

$$R_N = R_{TH} \tag{1-10}$$

This derivation says that Norton resistance equals Thevenin resistance. If you calculate a Thevenin resistance of 10 kΩ, you immediately know that the Norton resistance equals 10 kΩ.

Basic Idea

What is Norton's theorem? Look at Fig. 1-12*a*. This black box can contain any circuit with dc sources and linear resistances. Norton proved that the circuit inside the black box of Fig. 1-12*a* would produce exactly the same load voltage as the simple circuit of Fig. 1-12*b*. As a derivation, Norton's theorem looks like this:

$$V_L = I_N(R_N \parallel R_L) \tag{1-11}$$

In words: The load voltage equals the Norton current times the Norton resistance in parallel with the load resistance.

Earlier we saw that Norton resistance equals Thevenin resistance. But notice the difference in the location of the resistors: Thevenin resistance is always in series with a voltage source; Norton resistance is always in parallel with a current source.

Note: If you are using electron flow, keep the following in mind. In industry, the arrow inside the current source is almost always drawn in the direction of conventional current. The exception is a current source drawn with a dashed arrow instead of a solid arrow. In this case, the source pumps electrons in the direction of the dashed arrow.

GOOD TO KNOW

Like Thevenin's theorem, Norton's theorem can be applied to ac circuits containing inductors, capacitors, and resistors. For ac circuits, the Norton current I_N is usually stated as a complex number in polar form, whereas the Norton impedance Z_N is usually expressed as a complex number in rectangular form.

Figure 1-12 (*a*) Black box has a linear circuit inside of it; (*b*) Norton circuit.

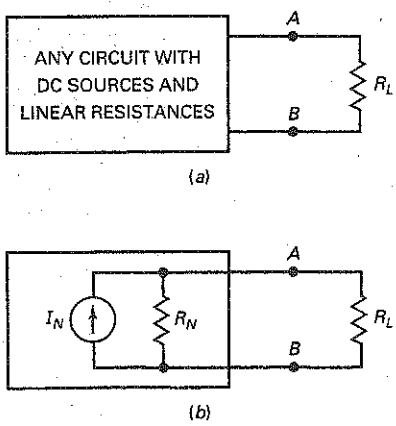

Figure 1-13 Duality principle: Thevenin theorem implies Norton theorem and vice versa. (*a*) Converting Thevenin to Norton; (*b*) converting Norton to Thevenin.

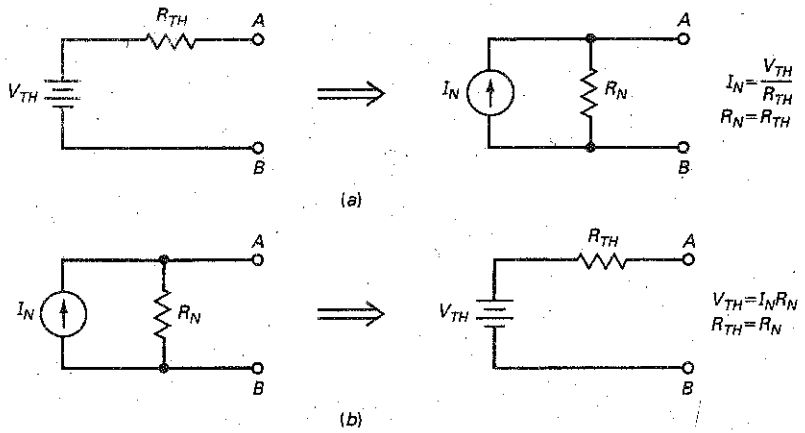

The Derivation

Norton's theorem can be derived from the **duality principle.** It states that for any theorem in electrical circuit analysis there is a dual (opposite) theorem in which one replaces the original quantities with dual quantities. Here is a brief list of dual quantities:

Voltage ⟷ Current
Voltage source ⟷ Current source
Series ⟷ Parallel
Series resistance ⟷ Parallel resistance

Figure 1-13 summarizes the duality principle as it applies to Thevenin and Norton circuits. It means that we can use either circuit in our calculations. As you will see later, both equivalent circuits are useful. Sometimes, it is easier to use Thevenin. At other times, we use Norton. It depends on the specific problem. Summary Table 1-1 shows the steps for getting the Thevenin and Norton quantities.

Summary Table 1-1 Thevenin and Norton Values

Process	Thevenin	Norton
Step 1	Open the load resistor.	Short the load resistor.
Step 2	Calculate or measure the open-circuit voltage. This is the Thevenin voltage.	Calculate or measure the short-circuit current. This is the Norton current.
Step 3	Short voltage sources and open current sources.	Short voltage sources, open current sources, and open load resistor.
Step 4	Calculate or measure the open-circuit resistance. This is the Thevenin resistance.	Calculate or measure the open-circuit resistance. This is the Norton resistance.

Relationships between Thevenin and Norton Circuits

We already know that the Thevenin and Norton resistances are equal in value, but different in location: Thevenin resistance is in series with a voltage source, and Norton resistance is in parallel with a current source.

We can derive two more relationships, as follows. We can convert any Thevenin circuit to a Norton circuit, as shown in Fig. 1-13*a*. The proof is straightforward. Short the *AB* terminals of the Thevenin circuit, and you get the Norton current:

$$I_N = \frac{V_{TH}}{R_{TH}} \tag{1-12}$$

This derivation says that the Norton current equals the Thevenin voltage divided by the Thevenin resistance.

Similarly, we can convert any Norton circuit to a Thevenin circuit, as shown in Fig. 1-13*b*. The open-circuit voltage is:

$$V_{TH} = I_N R_N \tag{1-13}$$

This derivation says that the Thevenin voltage equals the Norton current times the Norton resistance.

Figure 1-13 summarizes the equations for converting either circuit into the other.

Example 1-6

Suppose that we have reduced a complicated circuit to the Thevenin circuit shown in Fig. 1-14*a*. How can we convert this to a Norton circuit?

Figure 1-14 Calculating Norton current.

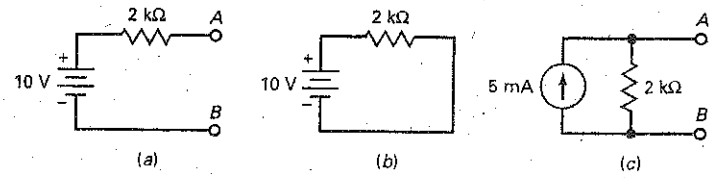

SOLUTION Use Eq. (1-12) to get:

$$I_N = \frac{10\text{V}}{2\text{k}\Omega} = 5 \text{ mA}$$

Figure 1-14*c* shows the Norton circuit.

Most engineers and technicians forget Eq. (1-12) soon after they leave school. But they always remember how to solve the same problem using Ohm's law. Here is what they do. Look at Fig. 1-14*a*. Visualize a short across the *AB* terminals, as shown in Fig. 1-14*b*. The short-circuit current equals the Norton current:

$$I_N = \frac{10\text{V}}{2\text{k}\Omega} = 5 \text{ mA}$$

This is the same result, but calculated with Ohm's law applied to the Thevenin circuit. Figure 1-15 summarizes the idea. This memory aid will help you calculate the Norton current, given the Thevenin circuit.

Figure 1-15 A memory aid for Norton current.

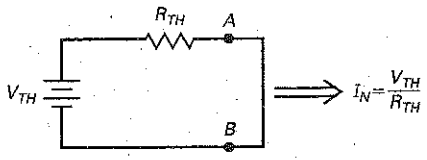

PRACTICE PROBLEM 1-6 If the Thevenin resistance of Fig. 1-14*a* is 5 kΩ, determine the Norton current value.

1-7 Troubleshooting

Troubleshooting means finding out why a circuit is not doing what it is supposed to do. The most common troubles are opens and shorts. Devices like transistors can become open or shorted in a number of ways. One way to destroy any transistor is by exceeding its maximum-power rating.

Resistors become open when their power dissipation is excessive. But you can get a shorted resistor indirectly as follows. During the stuffing and soldering of printed-circuit boards, an undesirable splash of solder may connect two nearby conducting lines. Known as a **solder bridge,** this effectively shorts any device between the two conducting lines. On the other hand, a poor solder connection usually means no connection at all. This is known as a **cold-solder joint** and means that the device is open.

Besides opens and shorts, anything is possible. For instance, temporarily applying too much heat to a resistor may permanently change the resistance by several percent. If the value of resistance is critical, the circuit may not work properly after the heat shock.

And then there is the troubleshooter's nightmare: the intermittent trouble. This kind of trouble is very difficult to isolate because it appears and disappears. It may be a cold-solder joint that alternately makes and breaks a contact, or a loose cable connector, or any similar trouble that causes on-again, off-again operation.

An Open Device

Always remember these two facts about an **open device:**

The current through an open device is zero.
The voltage across it is unknown.

The first statement is true because an open device has infinite resistance. No current can exist in an infinite resistance. The second statement is true because of Ohm's law:

$$V = IR = (0)(\infty)$$

In this equation, zero times infinity is mathematically indeterminate. You have to figure out what the voltage is by looking at the rest of the circuit.

A Shorted Device

A shorted device is exactly the opposite. Always remember these two statements about a **shorted device:**

> *The voltage across a shorted device is zero.*
> *The current through it is unknown.*

The first statement is true because a shorted device has zero resistance. No voltage can exist across zero resistance. The second statement is true because of Ohm's law:

$$I = \frac{V}{R} = \frac{0}{0}$$

Zero divided by zero is mathematically meaningless. You have to figure out what the current is by looking at the rest of the circuit.

Procedure

Normally, you measure voltages with respect to ground. From these measurements and your knowledge of basic electricity, you can usually deduce the trouble. After you have isolated a component as the top suspect, you can unsolder or disconnect the component and use an ohmmeter or other instrument for confirmation.

Figure 1-16 Voltage divider and load used in troubleshooting discussion.

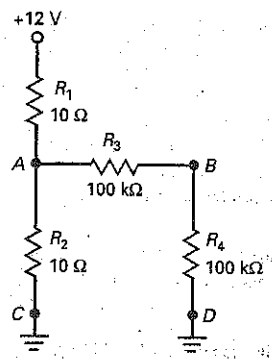

Normal Values

In Fig. 1-16, a stiff voltage divider consisting of R_1 and R_2 drives resistors R_3 and R_4 in series. Before you can troubleshoot this circuit, you have to know what the normal voltages are. The first thing to do, therefore, is to work out the values of V_A and V_B. The first is the voltage between A and ground. The second is the voltage between B and ground. Because R_1 and R_2 are much smaller than R_3 and R_4 (10 Ω versus 100 kΩ), the stiff voltage at A is approximately +6 V. Furthermore, since R_3 and R_4 are equal, the voltage at B is approximately +3 V. When this circuit is trouble-free, you will measure 6 V between A and ground, and 3 V between B and ground. These two voltages are the first entry of Table 1-2.

R_1 Open

When R_1 is open, what do you think happens to the voltages? Since no current can flow through the open R_1, no current can flow through R_2. Ohm's law tells us the voltage across R_2 is zero. Therefore, $V_A = 0$ and $V_B = 0$, as shown in Table 1-2 for R_1 open.

R_2 Open

When R_2 is open, what happens to the voltages? Since no current can flow through the open R_2, the voltage at A is pulled up toward the supply voltage. Since R_1 is much smaller than R_3 and R_4, the voltage at A is approximately 12 V. Since R_3 and R_4 are equal, the voltage at B becomes 6 V. This is why $V_A = 12$ V and $V_B = 6$ V, as shown in Table 1-2 for an R_2 open.

Table 1-2	Troubles and Clues	
Trouble	V_A	V_B
Circuit OK	6 V	3 V
R_1 open	0	0
R_2 open	12 V	6 V
R_3 open	6 V	0
R_4 open	6 V	6 V
C open	12 V	6 V
D open	6 V	6 V
R_1 shorted	12 V	6 V
R_2 shorted	0	0
R_3 shorted	6 V	6 V
R_4 shorted	6 V	0

Remaining Troubles

If ground C is open, no current can pass through R_2. This is equivalent to an open R_2. This is why the trouble C open has $V_A = 12$ V and $V_B = 6$ V in Table 1-2.

You should work out all of remaining entries in Table 1-2, making sure that you understand why each voltage exists for the given trouble.

Example 1-7

In Fig. 1-16, you measure $V_A = 0$ and $V_B = 0$. What is the trouble?

SOLUTION Look at Table 1-2. As you can see, two troubles are possible: R_1 open or R_2 shorted. Both of these produce zero voltage at points A and B. To isolate the trouble, you can disconnect R_1 and measure it. If it measures open, you have found the trouble. If it measures OK, then R_2 is the trouble.

PRACTICE PROBLEM 1-7 What could the possible troubles be if you measure $V_A = 12$ V and $V_B = 6$ V in Fig. 1-16?

Summary

SEC. 1-1 THE THREE KINDS OF FORMULAS

A *definition* is a formula invented for a new concept. A *law* is a formula for a relation in nature. A *derivation* is a formula produced with mathematics.

SEC. 1-2 APPROXIMATIONS

Approximations are widely used in industry. The ideal approximation is useful for troubleshooting. The second approximation is useful for preliminary circuit calculations. Higher approximations are used with computers.

SEC. 1-3 VOLTAGE SOURCES

An ideal voltage source has no internal resistance. The second approximation of a voltage source has an internal resistance in series with the source. A stiff voltage source is defined as one whose internal resistance is less than $^1/_{100}$ of the load resistance.

SEC. 1-4 CURRENT SOURCES

An ideal current source has an infinite internal resistance. The second approximation of a current source has a large internal resistance in parallel with the source. A *stiff current source* is defined as one whose internal resistance is more than 100 times the load resistance.

SEC. 1-5 THEVENIN'S THEOREM

The *Thevenin voltage* is defined as the voltage across an open load. The *Thevenin resistance* is defined as the resistance an ohmmeter would measure with an open load and all sources reduced to zero. Thevenin proved that a Thevenin equivalent circuit will produce the same load current as any other circuit with sources and linear resistances.

SEC. 1-6 NORTON'S THEOREM

The Norton resistance equals the Thevenin resistance. The Norton current equals the load current when the load is shorted. Norton proved that a Norton equivalent circuit produces the same load voltage as any other circuit with sources and linear resistances. Norton current equals Thevenin voltage divided by Thevenin resistance.

SEC. 1-7 TROUBLESHOOTING

The most common troubles are shorts, opens, and intermittent troubles. A short always has zero voltage across it; the current through a short must be calculated by examining the rest of the circuit. An open always has zero current through it; the voltage across an open must be calculated by examining the rest of the circuit. An intermittent trouble is an on-again, off-again trouble that requires patient and logical troubleshooting to isolate it.

Definitions

(1-1) Stiff voltage source:

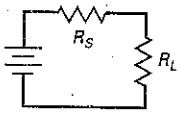

$R_S < 0.01R_L$

(1-3) Stiff current source:

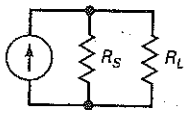

$R_S > 100R_L$

(1-5) Thevenin voltage:

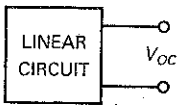

$V_{TH} = V_{OC}$

(1-6) Thevenin resistance:

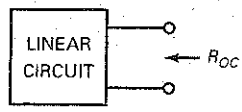

$R_{TH} = R_{OC}$

(1-8) Norton current:

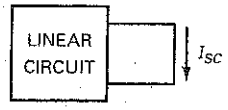

$I_N = I_{SC}$

(1-9) Norton resistance:

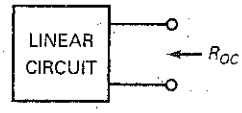

$R_N = R_{OC}$

Derivations

(1-2) Stiff voltage source:

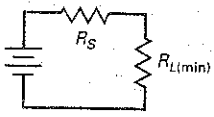

$R_{L(min)} = 100R_S$

(1-4) Stiff current source:

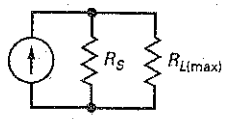

$R_{L(max)} = 0.01R_S$

(1-7) Thevenin's theorem:

$$I_L = \frac{V_{TH}}{R_{TH} + R_L}$$

(1-10) Norton resistance:

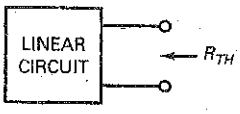

$$R_N = R_{TH}$$

(1-11) Norton's theorem:

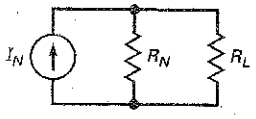

$$V_L = I_N(R_N \| R_L)$$

(1-12) Norton current:

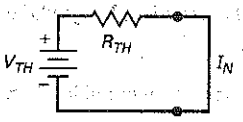

$$I_N = \frac{V_{TH}}{R_{TH}}$$

(1-13) Thevenin voltage:

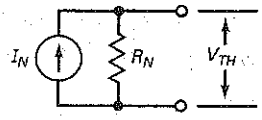

$$V_{TH} = I_N R_N$$

Student Assignments

1. **An ideal voltage source has**
   a. Zero internal resistance
   b. Infinite internal resistance
   c. A load-dependent voltage
   d. A load-dependent current

2. **A real voltage source has**
   a. Zero internal resistance
   b. Infinite internal resistance
   c. A small internal resistance
   d. A large internal resistance

3. **If a load resistance is 100 Ω, a stiff voltage source has a resistance of**
   a. Less than 1 Ω
   b. At least 10 Ω
   c. More than 10 kΩ
   d. Less than 10 kΩ

4. **An ideal current source has**
   a. Zero internal resistance
   b. Infinite internal resistance
   c. A load-dependent voltage
   d. A load-dependent current

5. **A real current source has**
   a. Zero internal resistance
   b. Infinite internal resistance
   c. A small internal resistance
   d. A large internal resistance

6. **If a load resistance is 100 Ω, a stiff current source has a resistance of**
   a. Less than 1 Ω
   b. Less than 1 Ω
   c. Less than 10 kΩ
   d. More than 10 kΩ

7. **The Thevenin voltage is the same as the**
   a. Shorted-load voltage
   b. Open-load voltage
   c. Ideal source voltage
   d. Norton voltage

8. **The Thevenin resistance is equal in value to the**
   a. Load resistance
   b. Half the load resistance
   c. Internal resistance of a Norton circuit
   d. Open-load resistance

9. **To get the Thevenin voltage, you have to**
   a. Short the load resistor
   b. Open the load resistor
   c. Short the voltage source
   d. Open the voltage source

10. **To get the Norton current, you have to**
    a. Short the load resistor
    b. Open the load resistor
    c. Short the voltage source
    d. Open the current source

11. **The Norton current is sometimes called the**
    a. Shorted-load current
    b. Open-load current
    c. Thevenin current
    d. Thevenin voltage

12. **A solder bridge**
    a. May produce a short
    b. May cause an open
    c. Is useful in some circuits
    d. Always has high resistance

13. **A cold-solder joint**
    a. Always has low resistance
    b. Shows good soldering technique
    c. Usually produces an open
    d. Will cause a short circuit

14. **An open resistor has**
    a. Infinite current through it
    b. Zero voltage across it
    c. Infinite voltage across it
    d. Zero current through it

15. **A shorted resistor has**
    a. Infinite current through it
    b. Zero voltage across it
    c. Infinite voltage across it
    d. Zero current through it

16. **An ideal voltage source and an internal resistance are examples of the**
    a. Ideal approximation
    b. Second approximation
    c. Higher approximation
    d. Exact model

17. **Treating a connecting wire as a conductor with zero resistance is an example of the**
    a. Ideal approximation
    b. Second approximation
    c. Higher approximation
    d. Exact model

18. **The voltage out of an ideal voltage source**
   a. Is zero
   b. Is constant
   c. Depends on the value of load resistance
   d. Depends on the internal resistance

19. **The current out of an ideal current source**
   a. Is zero
   b. Is constant
   c. Depends on the value of load resistance
   d. Depends on the internal resistance

20. **Thevenin's theorem replaces a complicated circuit facing a load by an**
   a. Ideal voltage source and parallel resistor
   b. Ideal current source and parallel resistor
   c. Ideal voltage source and series resistor
   d. Ideal current source and series resistor

21. **Norton's theorem replaces a complicated circuit facing a load by an**
   a. Ideal voltage source and parallel resistor
   b. Ideal current source and parallel resistor
   c. Ideal voltage source and series resistor
   d. Ideal current source and series resistor

22. **One way to short a device is**
   a. With a cold-solder joint
   b. With a solder bridge
   c. By disconnecting it
   d. By opening it

23. **Derivations are**
   a. Discoveries
   b. Inventions
   c. Produced by mathematics
   d. Always called theorems

Problems

SEC. 1-3 VOLTAGE SOURCES

1-1 A given voltage source has an ideal voltage of 12 V and an internal resistance of 0.1 Ω. For what values of load resistance will the voltage source appear stiff?

1-2 A load resistance may vary from 270 Ω to 100 kΩ. For a stiff voltage source to exist, what is the largest internal resistance the source can have?

1-3 The internal output resistance of a function generator is 50 Ω. For what values of load resistance does the generator appear stiff?

1-4 A car battery has an internal resistance of 0.04 Ω. For what values of load resistance does the car battery appear stiff?

1-5 The internal resistance of a voltage source equals 0.05 Ω. How much voltage is dropped across this internal resistance when the current through it equals 2 A?

1-6 In Fig. 1-17, the ideal voltage is 9 V and the internal resistance is 0.4 Ω. If the load resistance is zero, what is the load current?

Figure 1-17

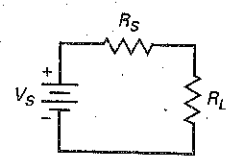

SEC. 1-4 CURRENT SOURCES

1-7 Suppose a current source has an ideal current of 10 mA and an internal resistance of 10 MΩ. For what values of load resistance will the current source appear stiff?

1-8 A load resistance may vary from 270 Ω to 100 kΩ. If a stiff current source drives this load resistance, what is the internal resistance of the source?

1-9 A current source has an internal resistance of 100 kΩ. What is the largest load resistance if the current source must appear stiff?

1-10 In Fig. 1-18, the ideal current is 20 mA and the internal resistance if 200 kΩ. If the load resistance equals zero, what does the load current equal?

Figure 1-18

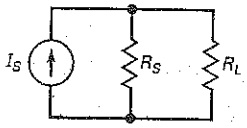

1-11 In Fig. 1-18, the ideal current is 5 mA and the internal resistance is 250 kΩ. If the load resistance is 10 kΩ, what is the load current? Is this a stiff current source?

SEC. 1-5 THEVENIN'S THEOREM

1-12 What is the Thevenin voltage in Fig. 1-19? The Thevenin resistance?

Figure 1-19

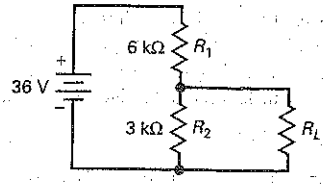

1-13 Use Thevenin's theorem to calculate the load current in Fig. 1-19 for each of these load resistances: 0, 1 kΩ, 2 kΩ, 3 kΩ, 4 kΩ, 5 kΩ, and 6 kΩ.

1-14 The voltage source of Fig. 1-19 is decreased to 18 V. What happens to the Thevenin voltage? To the Thevenin resistance?

1-15 All resistances are doubled in Fig. 1-19. What happens to the Thevenin voltage? To the Thevenin resistance?

SEC. 1-6 NORTON'S THEOREM

1-16 A circuit has a Thevenin voltage of 12 V and a Thevenin resistance of 3 kΩ. What is the Norton circuit?

1-17 A circuit has a Norton current of 10 mA and a Norton resistance of 10 kΩ. What is the Thevenin circuit?

1-18 What is the Norton circuit for Fig. 1-19?

SEC. 1-7 TROUBLESHOOTING

1-19 Suppose the load voltage of Fig. 1-19 is 36 V. What is wrong with R_1?

1-20 The load voltage of Fig. 1-19 is zero. The battery and the load resistance are OK. Suggest two possible troubles.

1-21 If the load voltage is zero in Fig. 1-19 and all resistors are normal, where does the trouble lie?

1-22 In Fig. 1-19, R_L is replaced with a voltmeter to measure the voltage across R_2. What input resistance must the voltmeter have to prevent meter loading?

Critical Thinking

1-23 Suppose we temporarily short the load terminals of a voltage source. If the ideal voltage is 12 V and the shorted load current is 150 A, what is the internal resistance of the source?

1-24 In Fig. 1-17, the ideal voltage is 10 V and the load resistance is 75 Ω. If the load voltage equals 9 V, what does the internal resistance equal? Is the voltage source stiff?

1-25 Somebody hands you a black box with a 2-kΩ resistor connected across the exposed load terminals. How can you measure the Thevenin voltage?

1-26 The black box in Prob. 1-25 has a knob on it that allows you to reduce all internal voltage and current sources to zero. How can you measure the Thevenin resistance?

1-27 Solve Prob. 1-13. Then solve the same problem without using Thevenin's theorem. After you are finished, comment on what you have learned about the Thevenin theorem.

1-28 You are in the laboratory looking at a circuit like the one shown in Fig. 1-20. Somebody challenges you to find the Thevenin circuit driving the load resistor. Describe an experimental procedure for measuring the Thevenin voltage and the Thevenin resistance.

1-29 Design a hypothetical current source using a battery and a resistor. The current source must meet the following specifications: It must supply a stiff 1 mA of current to any load resistance between 0 and 1 kΩ.

1-30 Design a voltage divider (similar to the one in Fig. 1-19) that meets these specifications: Ideal source voltage is 30 V, open-load voltage is 15 V, and Thevenin resistance is equal to or less than 2 kΩ.

1-31 Design a voltage divider like the one in Fig. 1-19 so that it produces a stiff 10 V to all load resistances greater than 1 MΩ. Use an ideal voltage of 30 V.

Figure 1-20

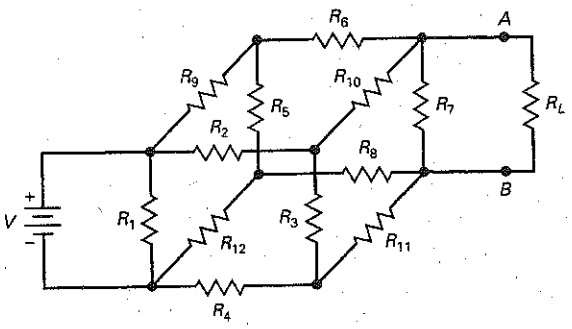

1-32 Somebody hands you a D-cell flashlight battery and a digital multimeter (DMM). You have nothing else to work with. Describe an experimental method for finding the Thevenin equivalent circuit of the flashlight battery.

1-33 You have a D-cell flashlight battery, a DMM, and a box of different resistors. Describe a method that uses one of the resistors to find the Thevenin resistance of the battery.

1-34 Calculate the load current in Fig. 1-21 for each of these load resistances: 0, 1 kΩ, 2 kΩ, 3 kΩ, 4 kΩ, 5 kΩ, and 6 kΩ.

Figure 1-21

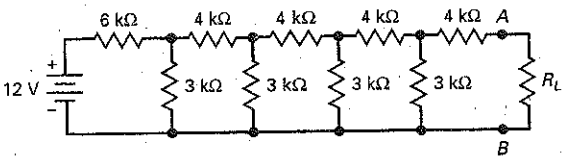

Troubleshooting

1-35 MultiSim Using Fig. 1-22 and its troubleshooting table, find the circuit troubles for conditions 1 to 8. The troubles are one of the resistors open, one of the resistors shorted, an open ground, or no supply voltage.

Figure 1-22 Troubleshooting.

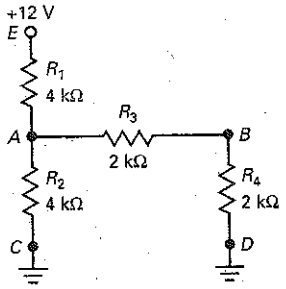

Condition	V_A	V_B	V_E	Condition	V_A	V_B	V_E
Normal	4 V	2 V	12 V	Trouble 5	6 V	3 V	12 V
Trouble 1	12 V	6 V	12 V	Trouble 6	6 V	6 V	12 V
Trouble 2	0 V	0 V	12 V	Trouble 7	0 V	0 V	0 V
Trouble 3	6 V	0 V	12 V	Trouble 8	3 V	0 V	12 V
Trouble 4	3 V	3 V	12 V				

Job Interview Questions

A job interviewer can quickly tell whether your learning is skin-deep or whether you really understand electronics. Interviewers do not always ask neat and tidy questions. Sometimes, they leave out data to see how you handle the question. When you interview for a job, the interviewer might ask you questions like the following.

1. What is the difference between a voltage source and a current source?
2. When do you have to include the source resistance in your calculations for load current?
3. If a device is modeled as a current source, what can you say about the load resistance?
4. What does a stiff source mean to you?
5. I have a circuit breadboarded on my lab bench. Tell me what measurements I can make to get the Thevenin voltage and Thevenin resistance.
6. What would be an advantage of a 50 Ω voltage source compared to a 600 Ω voltage source?
7. How are the Thevenin resistance and "cold cranking amperes" of a car battery related?
8. Someone tells you that a voltage source is heavily loaded. What do you think this means?
9. Which approximation does the technician normally use when performing initial troubleshooting procedures? Why?
10. When troubleshooting an electronics system, you measure a dc voltage of 9.5 V at a test point where the schematic diagram says it should be 10 V. What should you infer from this reading? Why?
11. What are some of the reasons for using a Thevenin or Norton circuit?
12. What is the value of the Thevenin and Norton theorems in bench testing?

Self-Test Answers

1. a	5. d	9. b	13. c	17. a	21. b
2. c	6. d	10. a	14. d	18. b	22. b
3. a	7. b	11. a	15. b	19. b	23. c
4. b	8. c	12. a	16. b	20. c	

Practice Problem Answers

1-1 60 kΩ

1-2 $V_L = 20$ V

1-4 3 mA when $R_L = 2$ kΩ; 2 mA $R_L = 6$ kΩ; 1 mA $R_L = 18$ kΩ

1-6 $I_N = 2$ mA

1-7 Either R_2 open, C open, or R_1 shorted

chapter 2

Semiconductors

- To understand how diodes, transistors, and integrated circuits work, you first have to study semiconductors: materials that are neither conductors nor insulators. Semiconductors contain some free electrons, but what makes them unusual is the presence of holes. In this chapter, you will learn about semiconductors, holes, and other related topics.

Objectives

After studying this chapter, you should be able to:

- Recognize, at the atomic level, the characteristics of good conductors and semiconductors.
- Describe the structure of a silicon crystal.
- List the two types of carriers and name the type of impurity that causes each to be a majority carrier.
- Explain the conditions that exist at the *pn* junction of an unbiased diode, a forward-biased diode, and a reverse-biased diode.
- Describe the types of breakdown current caused by excessive reverse voltage across a diode.

Chapter Outline

2-1 Conductors
2-2 Semiconductors
2-3 Silicon Crystals
2-4 Intrinsic Semiconductors
2-5 Two Types of Flow
2-6 Doping a Semiconductor
2-7 Two Types of Extrinsic Semiconductors
2-8 The Unbiased Diode
2-9 Forward Bias
2-10 Reverse Bias
2-11 Breakdown
2-12 Energy Levels
2-13 The Energy Hill
2-14 Barrier Potential and Temperature
2-15 Reverse-Biased Diode

Vocabulary

ambient temperature
avalanche effect
barrier potential
breakdown voltage
conduction band
covalent bond
depletion layer
diode
doping
extrinsic semiconductor
forward bias
free electron
hole
intrinsic semiconductor
junction diode
junction temperature
majority carriers
minority carriers
n-type semiconductor
p-type semiconductor
pn junction
recombination
reverse bias
saturation current
semiconductor
silicon
surface-leakage current
thermal energy

2-1 Conductors

Copper is a good conductor. The reason is clear when we look at its atomic structure (Fig. 2-1). The nucleus of the atom contains 29 protons (positive charges). When a copper atom has a neutral charge, 29 electrons (negative charges) circle the nucleus like planets around the sun. The electrons travel in distinct *orbits* (also called *shells*). There are 2 electrons in the first orbit, 8 electrons in the second, 18 in the third, and 1 in the outer orbit.

Stable Orbits

The positive nucleus of Fig. 2-1 attracts the planetary electrons. The reason why these electrons are not pulled into the nucleus is the centrifugal (outward) force created by their circular motion. This centrifugal force is exactly equal to the inward pull of the nucleus, so that the orbit is stable. The idea is similar to a satellite that orbits the earth. At the right speed and height, a satellite can remain in a stable orbit above the earth.

The larger the orbit of an electron, the smaller the attraction of the nucleus. In a larger orbit, an electron travels more slowly, producing less centrifugal force. The outermost electron in Fig. 2-1 travels very slowly and feels almost no attraction to the nucleus.

The Core

In electronics, all that matters is the outer orbit. It is called the *valence orbit.* This orbit controls the electrical properties of the atom. To emphasize the importance of the valence orbit, we define the *core* of an atom as the nucleus and all the inner orbits. For a copper atom, the core is the nucleus (+29), and the first three orbits (−28).

The core of a copper atom has a net charge of +1 because it contains 29 protons and 28 inner electrons. Figure 2-2 can help in visualizing the core and the valence orbit. The valence electron is in a large orbit around a core and has a net charge of only +1. Because of this, the inward pull felt by the valence electron is very small.

Figure 2-1 Copper atom.

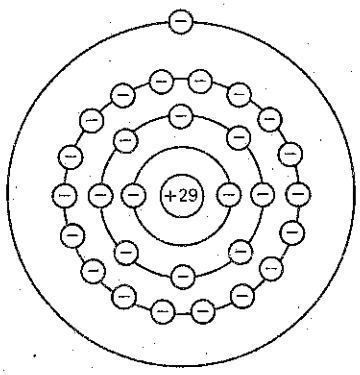

Figure 2-2 Core diagram of copper atom.

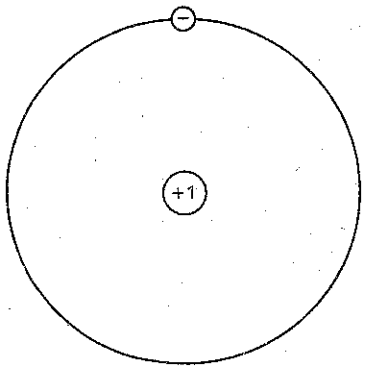

Free Electron

Since the attraction between the core and the valence electron is very weak, an outside force can easily dislodge this electron from the copper atom. This is why we often call the valence electron a **free electron.** This is also why copper is a good conductor. The slightest voltage causes the free electrons to flow from one atom to the next. The best conductors are silver, copper, and gold. All have a core diagram like Fig. 2-2.

Example 2-1

Suppose an outside force removes the valence electron of Fig. 2-2 from a copper atom. What is the net charge of the copper atom? What is the net charge if an outside electron moves into the valence orbit of Fig. 2-2?

SOLUTION. When the valence electron leaves, the net charge of the atom becomes +1. Whenever an atom loses one of its electrons, it becomes positively charged. We call a positively charged atom a *positive ion.*

When an outside electron moves into the valence orbit of Fig. 2-2, the net charge of the atom becomes −1. Whenever an atom has an extra electron in its valence orbit, we call the negatively charged atom a *negative ion.*

2-2 Semiconductors

The best conductors (silver, copper, and gold) have one valence electron, whereas the best insulators have eight valence electrons. A **semiconductor** is an element with electrical properties between those of a conductor and those of an insulator. As you might expect, the best semiconductors have four valence electrons.

Germanium

Germanium is an example of a semiconductor. It has four electrons in the valence orbit. Many years ago, germanium was the only material suitable for making semiconductor devices. But these germanium devices had a fatal flaw (their excessive reverse current, discussed in a later section) that engineers could not overcome. Eventually, another semiconductor named **silicon** became practical and made germanium obsolete in most electronic applications.

Silicon

Next to oxygen, silicon is the most abundant element on the earth. But there were certain refining problems that prevented the use of silicon in the early days of semiconductors. Once these problems were solved, the advantages of silicon (discussed later) immediately made it the semiconductor of choice. Without it, modern electronics, communications, and computers would be impossible.

Figure 2-3 (*a*) Silicon atom; (*b*) core diagram.

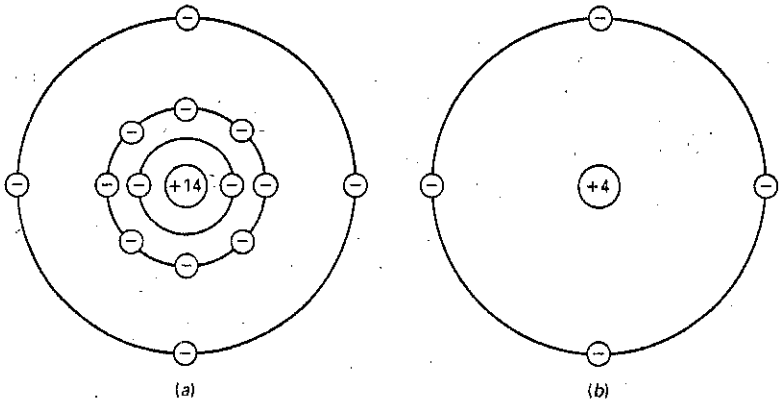

GOOD TO KNOW

Another common semiconductor element is carbon (C), which is used mainly in the production of resistors.

An isolated silicon atom has 14 protons and 14 electrons. As shown in Fig. 2-3*a*, the first orbit contains 2 electrons and the second orbit contains 8 electrons. The 4 remaining electrons are in the valence orbit. In Fig. 2-3*a*, the core has a net charge of +4 because it contains 14 protons in the nucleus and 10 electrons in the first two orbits.

Figure 2-3*b* shows the core diagram of a silicon atom. The 4 valence electrons tell us that silicon is a semiconductor.

Example 2-2

What is the net charge of the silicon atom in Fig. 2-3*b* if it loses one of its valence electrons? If it gains an extra electron in the valence orbit?

SOLUTION If it loses an electron, it becomes a positive ion with a charge of +1. If it gains an extra electron, it becomes a negative ion with a charge of −1.

2-3 Silicon Crystals

When silicon atoms combine to form a solid, they arrange themselves into an orderly pattern called a *crystal*. Each silicon atom shares its electrons with four neighboring atoms in such a way as to have eight electrons in its valence orbit. For instance, Fig. 2-4*a* shows a central atom with four neighbors. The shaded circles represent the silicon cores. Although the central atom originally had four electrons in its valence orbit, it now has eight.

Figure 2–4 (*a*) Atom in crystal has four neighbors; (*b*) covalent bonds.

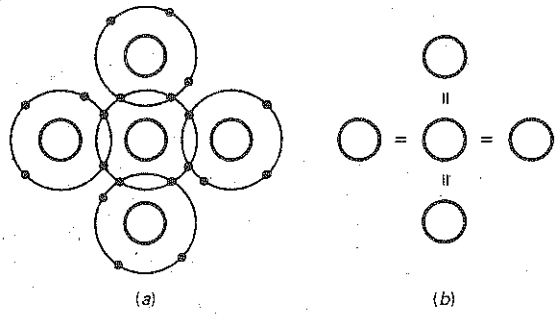

Covalent Bonds

Each neighboring atom shares an electron with the central atom. In this way, the central atom has four additional electrons, giving it a total of eight electrons in the valence orbit. The electrons no longer belong to any single atom. Each central atom and its neighbors share the electrons. The same idea is true for all the other silicon atoms. In other words, every atom inside a silicon crystal has four neighbors.

In Fig. 2-4*a*, each core has a charge of +4. Look at the central core and the one to its right. These two cores attract the pair of electrons between them with equal and opposite force. This pulling in opposite directions is what holds the silicon atoms together. The idea is similar to tug-of-war teams pulling on a rope. As long as both teams pull with equal and opposite force, they remain bonded together.

Since each shared electron in Fig. 2-4*a* is being pulled in opposite directions, the electron becomes a bond between the opposite cores. We call this type of chemical bond a **covalent bond.** Figure 2-4*b* is a simpler way to show the concept of the covalent bonds. In a silicon crystal, there are billions of silicon atoms, each with eight valence electrons. These valence electrons are the covalent bonds that hold the crystal together—that give it solidity.

Valence Saturation

Each atom in a silicon crystal has eight electrons in its valence orbit. These eight electrons produce a chemical stability that results in a solid piece of silicon material. No one is quite sure why the outer orbit of all elements has a predisposition toward having eight electrons. When eight electrons do not exist naturally in an element, there seems to be a tendency for the element to combine and share electrons with other atoms so as to have eight electrons in the outer orbit.

There are advanced equations in physics that partially explain why eight electrons produce chemical stability in different materials, but no one knows the reason why the number eight is so special. It is one of those laws like the law of gravity, Coulomb's law, and other laws that we observe but cannot fully explain.

When the valence orbit has eight electrons, it is *saturated* because no more electrons can fit into this orbit. Stated as a law:

Valence saturation: $n = 8$ (2-1)

In words, *the valence orbit can hold no more than eight electrons.* Furthermore, the eight valence electrons are called *bound electrons* because they are tightly

held by the atoms. Because of these bound electrons, a silicon crystal is almost a perfect insulator at room temperature, approximately 25°C.

The Hole

The **ambient temperature** is the temperature of the surrounding air. When the ambient temperature is above absolute zero (−273°C), the heat energy in this air causes the atoms in a silicon crystal to vibrate. The higher the ambient temperature, the stronger the mechanical vibrations become. When you pick up a warm object, the warmth you feel is the effect of the vibrating atoms.

In a silicon crystal, the vibrations of the atoms can occasionally dislodge an electron from the valence orbit. When this happens, the released electron gains enough energy to go into a larger orbit, as shown in Fig. 2-5*a*. In this larger orbit, the electron is a free electron.

But that's not all. The departure of the electron creates a vacancy in the valence orbit called a **hole** (see Fig. 2-5*a*). This hole behaves like a positive charge because the loss of the electron produces a positive ion. The hole will attract and capture any electron in the immediate vicinity. The existence of holes is the critical difference between conductors and semiconductors. Holes enable semiconductors to do all kinds of things that are impossible with conductors.

At room temperature, thermal energy produces only a few holes and free electrons. To increase the number of holes and free electrons, it is necessary to *dope* the crystal. More is said about this in a later section.

GOOD TO KNOW

A hole and an electron each possess a charge of 0.16×10^{-18} C, but of opposite polarity.

Recombination and Lifetime

In a pure silicon crystal, **thermal** (heat) **energy** creates an equal number of free electrons and holes. The free electrons move randomly throughout the crystal. Occasionally, a free electron will approach a hole, feel its attraction, and fall into it. **Recombination** is the merging of a free electron and a hole (see Fig. 2-5*b*).

The amount of time between the creation and disappearance of a free electron is called the *lifetime*. It varies from a few nanoseconds to several microseconds, depending on how perfect the crystal is and other factors.

Figure 2-5 (*a*) Thermal energy produces electron and hole; (*b*) recombination of free electron and hole.

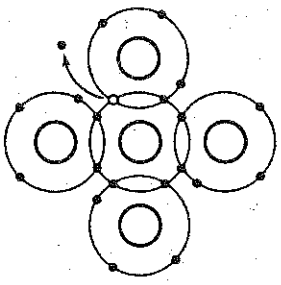

(*a*)

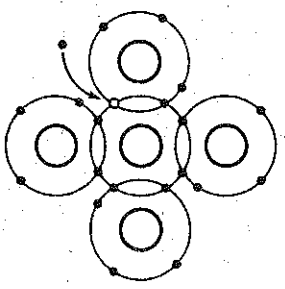

(*b*)

Main Ideas

At any instant, the following is taking place inside a silicon crystal:

1. Some free electrons and holes are being created by thermal energy.
2. Other free electrons and holes are recombining.
3. Some free electrons and holes exist temporarily, awaiting recombination.

Example 2-3

If a pure silicon crystal has 1 million free electrons inside it, how many holes does it have? What happens to the number of free electrons and holes if the ambient temperature increases?

SOLUTION Look at Fig. 2-5*a*. When heat energy creates a free electron, it automatically creates a hole at the same time. Therefore, a pure silicon crystal

always has the same number of holes and free electrons. If there are 1 million free electrons, there are 1 million holes.

A higher temperature increases the vibrations at the atomic level, which means that more free electrons and holes are created. But no matter what the temperature is, a pure silicon crystal has the same number of free electrons and holes.

2-4 Intrinsic Semiconductors

An **intrinsic semiconductor** is a pure semiconductor. A silicon crystal is an intrinsic semiconductor if every atom in the crystal is a silicon atom. At room temperature, a silicon crystal acts like an insulator because it has only a few free electrons and holes produced by thermal energy.

Flow of Free Electrons

Figure 2-6 shows part of a silicon crystal between charged metallic plates. Assume that thermal energy has produced a free electron and a hole. The free electron is in a large orbit at the right end of the crystal. Because of the negatively charged plate, the free electron is repelled to the left. This free electron can move from one large orbit to the next until it reaches the positive plate.

Flow of Holes

Notice the hole at the left of Fig. 2-6. This hole attracts the valence electron at point *A*. This causes the valence electron to move into the hole.

When the valence electron at point *A* moves to the left, it creates a new hole at point *A*. The effect is the same as moving the original hole to the right. The new hole at point *A* can then attract and capture another valence electron. In this way, valence electrons can travel along the path shown by the arrows. This means the hole can move the opposite way, along path *A-B-C-D-E-F*, acting the same as a positive charge.

Figure 2-6 Hole flow through a semiconductor.

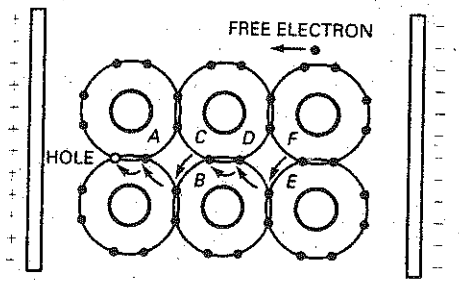

Figure 2-7 Intrinsic semiconductor has equal number of free electrons and holes.

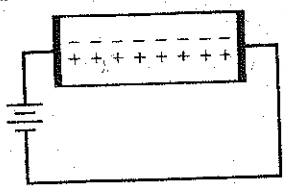

2-5 Two Types of Flow

Figure 2-7 shows an intrinsic semiconductor. It has the same number of free electrons and holes. This is because *thermal energy produces free electrons and holes in pairs.* The applied voltage will force the free electrons to flow left and the holes to flow right. When the free electrons arrive at the left end of the crystal, they enter the external wire and flow to the positive battery terminal.

On the other hand, the free electrons at the negative battery terminal will flow to the right end of the crystal. At this point, they enter the crystal and recombine with holes that arrive at the right end of the crystal. In this way, a steady flow of free electrons and holes occurs inside the semiconductor. Note that there is no hole flow outside the semiconductor.

In Fig. 2-7, *the free electrons and holes move in opposite directions.* From now on, we will visualize the current in a semiconductor as the combined effect of the two types of flow: the flow of free electrons in one direction and the flow of holes in the other direction. Free electrons and holes are often called *carriers* because they carry a charge from one place to another.

2-6 Doping a Semiconductor

One way to increase conductivity of a semiconductor is by **doping.** This means adding impurity atoms to an intrinsic crystal to alter its electrical conductivity. A doped semiconductor is called an **extrinsic semiconductor.**

Increasing the Free Electrons

How does a manufacturer dope a silicon crystal? The first step is to melt a pure silicon crystal. This breaks the covalent bonds and changes the silicon from a solid to a liquid. To increase the number of free electrons, *pentavalent atoms* are added to the molten silicon. Pentavalent atoms have five electrons in the valence orbit. Examples of pentavalent atoms include arsenic, antimony, and phosphorus. Because these materials *will donate an extra electron* to the silicon crystal, they are often referred to as *donor impurities.*

Figure 2-8*a* shows how the doped silicon crystal appears after it cools down and re-forms its solid crystal structure. A pentavalent atom is in the center, surrounded by four silicon atoms. As before, the neighboring atoms share an electron with the central atom. But this time, there is an extra electron left over. Remember that each pentavalent atom has five valence electrons. Since only eight electrons can fit into the valence orbit, the extra electron remains in a larger orbit. In other words, it is a free electron.

Each pentavalent or donor atom in a silicon crystal produces one free electron. This is how a manufacturer controls the conductivity of a doped semiconductor. The more impurity that is added, the greater the conductivity. In this way, a semiconductor may be lightly or heavily doped. A lightly doped semiconductor has a high resistance, whereas a heavily doped semiconductor has a low resistance.

Increasing the Number of Holes

How can we dope a pure silicon crystal to get an excess of holes? By using a *trivalent impurity,* one whose atoms have only three valence electrons. Examples include aluminum, boron, and gallium.

Figure 2-8*b* shows a trivalent atom in the center. It is surrounded by four silicon atoms, each sharing one of its valence electrons. Since the trivalent atom originally had only three valence electrons and each neighbor shares one

Figure 2-8 (*a*) Doping to get more free electrons; (*b*) doping to get more holes.

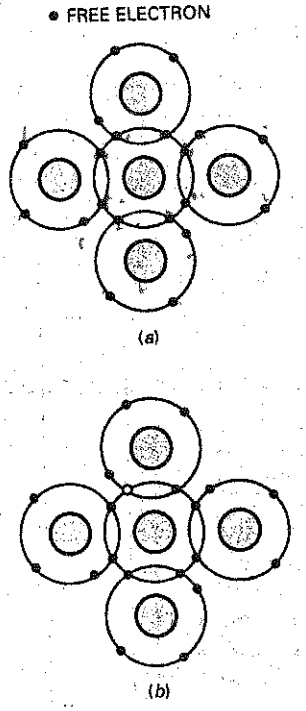

electron, only seven electrons are in the valence orbit. This means that a hole exists in the valence orbit of each trivalent atom. A trivalent atom is also called an *acceptor atom* because each hole it contributes can accept a free electron during recombination.

Points to Remember

Before manufacturers can dope a semiconductor, they must produce it as a pure crystal. Then, by controlling the amount of impurity, they can precisely control the properties of the semiconductor. Historically, pure germanium crystals were easier to produce than pure silicon crystals. This is why the earliest semiconductor devices were made of germanium. Eventually, manufacturing techniques improved and pure silicon crystals became available. Because of its advantages, silicon has become the most popular and useful semiconductor material.

Example 2-4

A doped semiconductor has 10 billion silicon atoms and 15 million pentavalent atoms. If the ambient temperature is 25°C, how many free electrons and holes are there inside the semiconductor?

SOLUTION Each pentavalent atom contributes one free electron. Therefore the semiconductor has 15 million free electrons produced by doping. There will be almost no holes by comparison because the only holes in the semiconductor are those produced by heat energy.

PRACTICE PROBLEM 2-4 As in Example 2-4, if 5 million trivalent atoms are added instead of pentavalent atoms, how many holes are there inside the semiconductor?

2-7 Two Types of Extrinsic Semiconductors

A semiconductor can be doped to have an excess of free electrons or an excess of holes. Because of this, there are two types of doped semiconductors.

n-Type Semiconductor

Silicon that has been doped with a pentavalent impurity is called an ***n*-type semiconductor,** where the *n* stands for negative. Figure 2-9 shows an *n*-type semiconductor. Since the free electrons outnumber the holes in an *n*-type semiconductor, the free electrons are called the **majority carriers** and the holes are called the **minority carriers.**

Because of the applied voltage, the *free electrons move to the left* and the *holes move to the right.* When a hole arrives at the right end of the crystal, one of the free electrons from the external circuit enters the semiconductor and recombines with the hole.

Figure 2-9 *n*-type semiconductor has many free electrons.

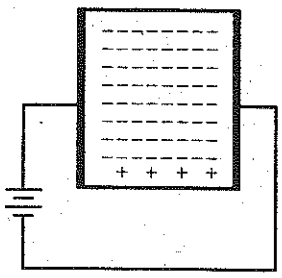

Figure 2-10 *p*-type semiconductor has many holes.

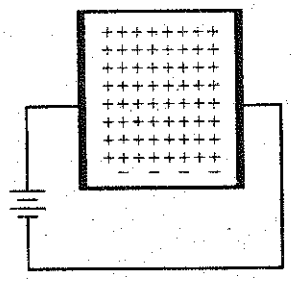

The free electrons shown in Fig. 2-9 flow to the left end of the crystal, where they enter the wire and flow on to the positive terminal of the battery.

p-Type Semiconductor

Silicon that has been doped with a trivalent impurity is called a ***p*-type semiconductor,** where the *p* stands for positive. Figure 2-10 shows a *p*-type semiconductor. Since holes outnumber free electrons, the holes are referred to as the majority carriers and the free electrons are known as the minority carriers.

Because of the applied voltage, the *free electrons move to the left* and the *holes move to the right.* In Fig. 2-10, the holes arriving at the right end of the crystal will recombine with free electrons from the external circuit.

There is also a flow of minority carriers in Fig. 2-10. The free electrons inside the semiconductor flow from right to left. Because there are so few minority carriers, they have almost no effect in this circuit.

2-8 The Unbiased Diode

By itself, a piece of *n*-type semiconductor is about as useful as a carbon resistor; the same can be said for a *p*-type semiconductor. But when a manufacturer dopes a crystal so that one-half of it is *p*-type and the other half is *n*-type, something new comes into existence.

The border between *p*-type and *n*-type is called the ***pn* junction.** The *pn* junction has led to all kinds of inventions including diodes, transistors, and integrated circuits. Understanding the *pn* junction enables you to understand all kinds of semiconductor devices.

The Unbiased Diode

As discussed in the preceding section, each trivalent atom in a doped silicon crystal produces one hole. For this reason, we can visualize a piece of *p*-type semiconductor as shown on the left side of Fig. 2-11. Each circled minus sign is the trivalent atom, and each plus sign is the hole in its valence orbit.

Similarly, we can visualize the pentavalent atoms and free electrons of an *n*-type semiconductor as shown on the right side of Fig. 2-11. Each circled plus sign represents a pentavalent atom, and each minus sign is the free electron it contributes to the semiconductor. Notice that each piece of semiconductor material is *electrically neutral because the number of pluses and minuses is equal.*

A manufacturer can produce a single crystal with *p*-type material on one side and *n*-type on the other side, as shown in Fig. 2-12. The junction is the border where the *p*-type and the *n*-type regions meet, and **junction diode** is another name for a *pn* crystal. The word **diode** is a contraction of two electrodes, where *di* stands for "two."

Figure 2-11 Two types of semiconductor.

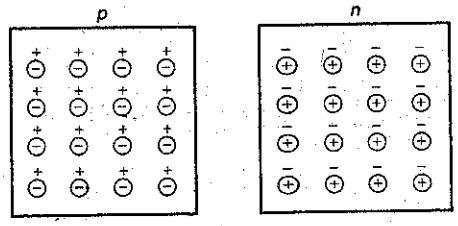

Figure 2-12 The *pn* junction.

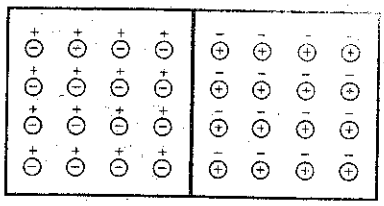

The Depletion Layer

Because of their repulsion for each other, the free electrons on the *n* side of Fig. 2-12 tend to diffuse (spread) in all directions. Some of the free electrons diffuse across the junction. When a free electron enters the *p* region, it becomes a minority carrier. With so many holes around it, this minority carrier has a short lifetime. Soon after entering the *p* region, the free electron recombines with a hole. When this happens, the *hole disappears* and the *free electron becomes a valence electron.*

Each time an electron diffuses across a junction, it creates a pair of ions. When an electron leaves the *n* side, it leaves behind a pentavalent atom that is short one negative charge; this pentavalent atom becomes a positive ion. After the migrating electron falls into a hole on the *p* side, it makes a negative ion out of the trivalent atom that captures it.

Figure 2-13*a* shows these ions on each side of the junction. The circled plus signs are the positive ions, and the circled minus signs are the negative ions. The ions are fixed in the crystal structure because of covalent bonding, and they cannot move around like free electrons and holes.

Each pair of positive and negative ions at the junction is called a *dipole.* The creation of a dipole means that one free electron and one hole have been taken out of circulation. As the number of dipoles builds up, the region near the junction is emptied of carriers. We call this charge-empty region the **depletion layer** (see Fig. 2-13*b*).

Barrier Potential

Each dipole has an electric field between the positive and negative ions. Therefore, if additional free electrons enter the depletion layer, the electric field tries to push these electrons back into the *n* region. The strength of the electric field increases with each crossing electron until equilibrium is reached. To a first approximation, this means that the electric field eventually stops the diffusion of electrons across the junction.

Figure 2-13 (*a*) Creation of ions at junction; (*b*) depletion layer.

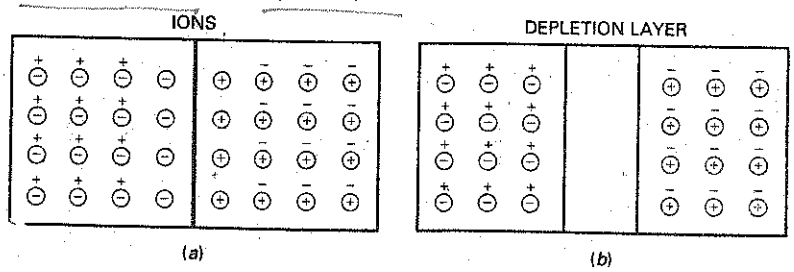

In Fig. 2-13*a*, the electric field between the ions is equivalent to a difference of potential called the **barrier potential.** At 25°C, the barrier potential equals approximately 0.3 V for germanium diodes and 0.7 V for silicon diodes.

2-9 Forward Bias

Figure 2-14 shows a dc source across a diode. The negative source terminal is connected to the *n*-type material, and the positive terminal is connected to the *p*-type material. This connection produces what is called **forward bias.**

Flow of Free Electrons

In Fig. 2-14, the battery pushes holes and free electrons toward the junction. If the battery voltage is less than the barrier potential, the free electrons do not have enough energy to get through the depletion layer. When they enter the depletion layer, the ions will push them back into the *n* region. Because of this, there is no current through the diode.

When the dc voltage source is greater than the barrier potential, the battery again pushes holes and free electrons toward the junction. This time, the free electrons have enough energy to pass through the depletion layer and recombine with the holes. If you visualize all the holes in the *p* region moving to the right and all the free electrons moving to the left, you will have the basic idea. Somewhere in the vicinity of the junction, these opposite charges recombine. Since free electrons continuously enter the right end of the diode and holes are being continuously created at the left end, there is a continuous current through the diode.

The Flow of One Electron

Let us follow a single electron through the entire circuit. After the free electron leaves the negative terminal of the battery, it enters the right end of the diode. It travels through the *n* region until it reaches the junction. When the battery voltage is greater than 0.7 V, the free electron has enough energy to get across the depletion layer. Soon after the free electron has entered the *p* region, it recombines with a hole.

In other words, the free electron becomes a valence electron. As a valence electron, it continues to travel to the left, passing from one hole to the next until it reaches the left end of the diode. When it leaves the left end of the diode, a new hole appears and the process begins again. Since there are billions of electrons taking the same journey, we get a continuous current through the diode. A series resistor is used to limit the amount of forward current.

MultiSim **Figure 2-14** Forward bias.

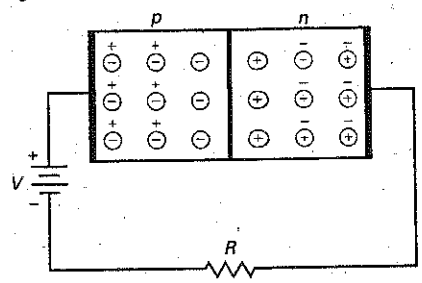

MultiSim **Figure 2-15** Reverse bias.

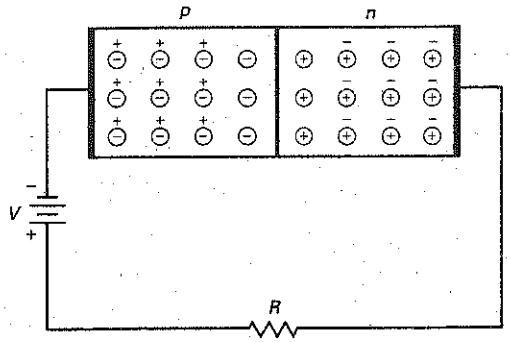

What to Remember

Current flows easily in a forward-biased diode. As long as the applied voltage is greater than the barrier potential, there will be a large continuous current in the circuit. In other words, if the source voltage is greater than 0.7 V, a silicon diode allows a continuous current in the forward direction.

2-10 Reverse Bias

Turn the dc source around and you get Fig. 2-15. This time, the negative battery terminal is connected to the *p* side, and the positive battery terminal to the *n* side. This connection produces what is called **reverse bias.**

Depletion Layer Widens

The negative battery terminal attracts the holes, and the positive battery terminal attracts the free electrons. Because of this, holes and free electrons flow away from the junction. Therefore, the depletion layer gets wider.

How wide does the depletion layer get in Fig. 2-16*a*? When the holes and electrons move away from the junction, the newly created ions increase the difference of potential across the depletion layer. The wider the depletion layer, the greater the difference of potential. The depletion layer stops growing when its difference of potential equals the applied reverse voltage. When this happens, electrons and holes stop moving away from the junction.

Figure 2-16 (*a*) Depletion layer; (*b*) increasing reverse bias widens depletion layer.

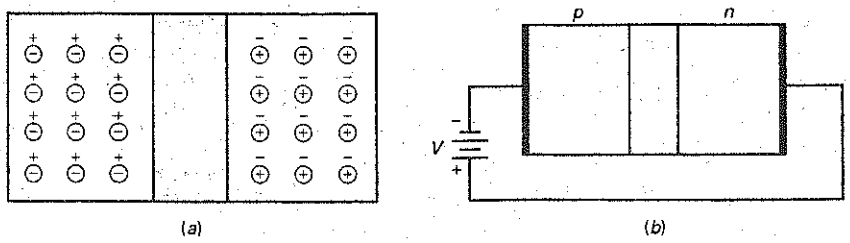

Figure 2-17 Thermal production of free electron and hole in depletion layer produces reverse minority saturation current.

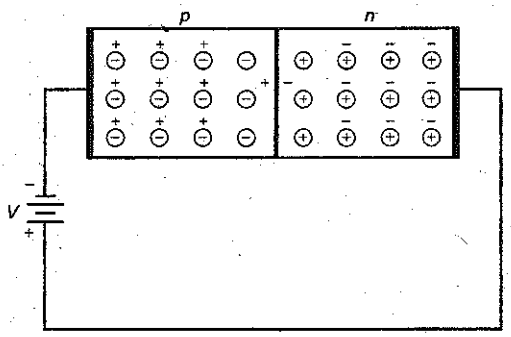

Sometimes the depletion layer is shown as a shaded region like that of Fig. 2-16*b*. The width of this shaded region is proportional to the reverse voltage. *As the reverse voltage increases, the depletion layer gets wider.*

Minority-Carrier Current

Is there any current after the depletion layer stabilizes? Yes. A small current exists with reverse bias. Recall that thermal energy continuously creates pairs of free electrons and holes. This means that a few minority carriers exist on both sides of the junction. Most of these recombine with the majority carriers. But those inside the depletion layer may exist long enough to get across the junction. When this happens, a small current flows in the external circuit.

Figure 2-17 illustrates the idea. Assume that thermal energy has created a free electron and hole near the junction. The depletion layer pushes the free electron to the right, forcing one electron to leave the right end of the crystal. The hole in the depletion layer is pushed to the left. This extra hole on the *p* side lets one electron enter the left end of the crystal and fall into a hole. Since thermal energy is continuously producing electron-hole pairs inside the depletion layer, a small continuous current flows in the external circuit.

The reverse current caused by the thermally produced minority carriers is called the **saturation current.** In equations, the saturation current is symbolized by I_S. The name *saturation* means that we cannot get more minority-carrier current than is produced by the thermal energy. In other words, *increasing the reverse voltage will not increase the number of thermally created minority carriers.*

Surface-Leakage Current

Besides the thermally produced minority-carrier current, does any other current exist in a reverse-biased diode? Yes. A small current flows on the surface of the crystal. Known as the **surface-leakage current,** it is caused by surface impurities and imperfections in the crystal structure.

What to Remember

The reverse current in a diode consists of a minority-carrier current and a surface-leakage current. In most applications, the reverse current in a silicon diode is so small that you don't even notice it. The main idea to remember is this: *Current is approximately zero in a reverse-biased silicon diode.*

Figure 2-18 Avalanche produces many free electrons and holes in depletion layer.

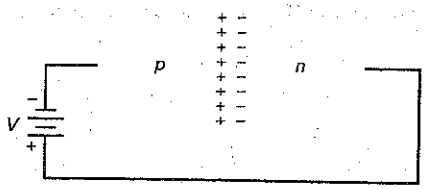

2-11 Breakdown

Diodes have maximum voltage ratings. There is a limit to how much reverse voltage a diode can withstand before it is destroyed. If you continue increasing the reverse voltage, you will eventually reach the **breakdown voltage** of the diode. For many diodes, breakdown voltage is at least 50 V. The breakdown voltage is shown on the *data sheet* for the diode. We will discuss data sheets in Chap. 3.

Once the breakdown voltage is reached, a large number of the minority carriers suddenly appears in the depletion layer and the diode conducts heavily.

Where do the carriers come from? They are produced by the **avalanche effect** (see Fig. 2-18), which occurs at higher reverse voltages. Here is what happens. As usual, there is a small reverse minority-carrier current. When the reverse voltage increases, it forces the minority carriers to move more quickly. These minority carriers collide with the atoms of the crystal. When these minority carriers have enough energy, they can knock valence electrons loose, producing free electrons. These new minority carriers then join the existing minority carriers to collide with other atoms. The process is geometric, because one free electron liberates one valence electron to get two free electrons. These two free electrons then free two more electrons to get four free electrons. The process continues until the reverse current becomes huge.

Figure 2-19 shows a magnified view of the depletion layer. The reverse bias forces the free electron to move to the right. As it moves, the electron gains speed. The larger the reverse bias, the faster the electron moves. If the high-speed electron has enough energy, it can bump the valence electron of the first atom into a larger orbit. This results in two free electrons. Both of these then accelerate and go on to dislodge two more electrons. In this way, the number of minority carriers may become quite large and the diode can conduct heavily.

The breakdown voltage of a diode depends on how heavily doped the diode is. With rectifier diodes (the most common type), the breakdown voltage is usually greater than 50 V. Summary Table 2-1 illustrates the difference between a forward- and reverse-biased diode.

GOOD TO KNOW

Exceeding the breakdown voltage of a diode does not necessarily mean that you will destroy the diode. As long as the product of reverse voltage and reverse current does not exceed the diode's power rating, the diode will recover fully.

Figure 2-19 The process of avalanche is a geometric progression: 1, 2, 4, 8, . . .

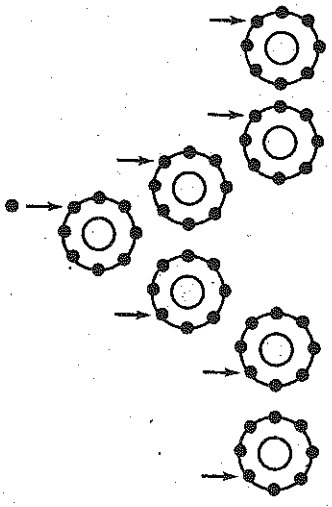

2-12 Energy Levels

To a good approximation, we can identify the total energy of an electron with the size of its orbit. That is, we can think of each radius of Fig. 2-20*a* as equivalent to an energy level in Fig. 2-20*b*. Electrons in the smallest orbit are on the first energy level; electrons in the second orbit are on the second energy level; and so on.

Higher Energy in Larger Orbit

Since an electron is attracted by the nucleus, extra energy is needed to lift an electron into a larger orbit. When an electron is moved from the first to the second orbit, it gains potential energy with respect to the nucleus. Some of the external forces that can lift an electron to higher energy levels are heat, light, and voltage.

Summary Table 2-1 Diode Bias

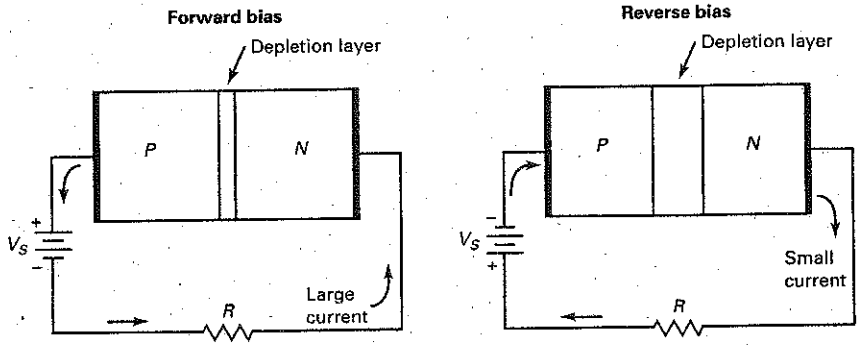

	Forward bias	Reverse bias
V_s polarity	(+) to P material (−) to N material	(−) to P materials (+) to N material
Current flow	Large forward current if $V_s > 0.7$ V	Small reverse current (saturation current and surface leakage current) if $V_s <$ breakdown voltage
Depletion layer	Narrow	Wide

For instance, assume that an outside force lifts the electron from the first to the second orbit in Fig. 2-20*a*. This electron has more potential energy because it is farther from the nucleus (Fig. 2-20*b*). It is like an object above the earth: The higher the object, the greater its potential energy with respect to the earth. If released, the object falls farther and does more work when it hits the earth.

Figure 2-20 Energy level is proportional to orbit size. (*a*) Orbits; (*b*) energy levels.

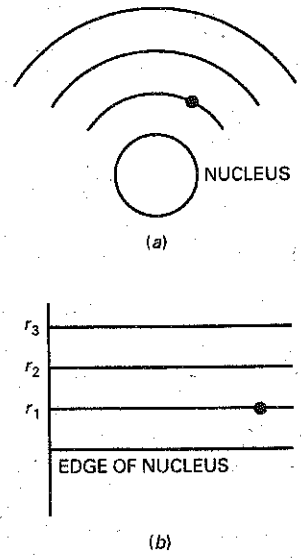

Falling Electrons Radiate Light

After an electron has moved into a larger orbit, it may fall back to a lower energy level. If it does, it will give up its extra energy in the form of heat, light, and other radiation.

In a *light-emitting diode (LED)*, the applied voltage lifts the electrons to higher energy levels. When these electrons fall back to lower energy levels, they give off light. Depending on the material used, the light is red, green, orange, or blue. Some LEDs produce infrared radiation (invisible), which is useful in burglar alarm systems.

Energy Bands

When a silicon atom is isolated, the orbit of an electron is influenced only by the charges of the isolated atom. This results in energy levels like the lines of Fig. 2-20*b*. But when silicon atoms are in a crystal, the orbit of each electron is also influenced by the charges of many other silicon atoms. Since each electron has a unique position inside the crystal, no two electrons see exactly the same pattern of surrounding charges. Because of this, the orbit of each electron is different; or, to put it another way, the energy level of each electron is different.

Figure 2-21 shows what happens to the energy levels. All electrons in first orbit have slightly different energy levels because no two electrons see

Figure 2-21 Intrinsic semiconductor and its energy bands.

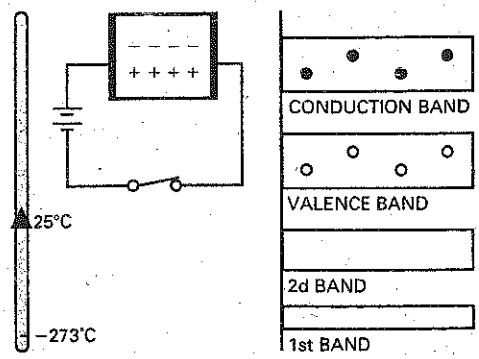

exactly the same charge environment. Since there are billions of first-orbit electrons, the slightly different energy levels form a cluster or *band* of energy. Similarly, the billions of second-orbit electrons, all with slightly different energy levels, form the second energy band—and so on for remaining bands.

Another point. As you know, thermal energy produces a few free electrons and holes. The holes remain in the valence band, but the free electrons go to the next-higher energy band, which is called the **conduction band.** This is why Fig. 2-21 shows a conduction band with some free electrons and a valence band with some holes. When the switch is closed, a small current exists in the pure semiconductor. The free electrons move through the conduction band, and holes move through the valence band.

n-Type Energy Bands

Figure 2-22 shows the energy bands for an *n*-type semiconductor. As you would expect, the majority carriers are the free electrons in the conduction band, and the minority carriers are the holes in the valence band. Since the switch is closed in Fig. 2-22, the majority carriers flow to the left, and the minority carriers flow to the right.

p-Type Energy Bands

Figure 2-23 shows the energy bands for a *p*-type semiconductor. Here you see a reversal of the carrier roles. Now, the majority carriers are the holes in the valence

GOOD TO KNOW

For both *n*- and *p*-type semiconductors, an increase in temperature produces an identical increase in the number of minority and majority current carriers.

Figure 2-22 *n*-type semiconductor and its energy bands.

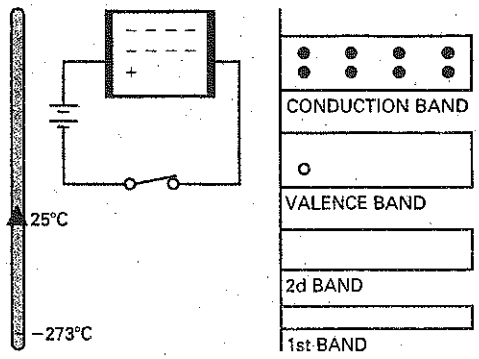

Figure 2-23 *p*-type semiconductor and its energy bands.

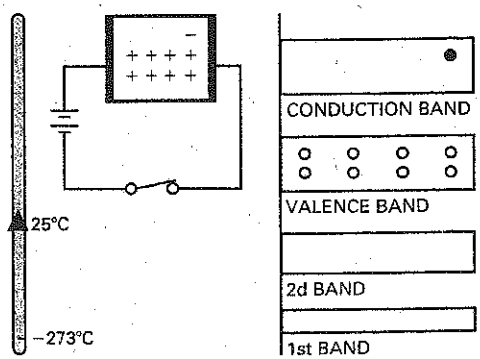

band, and the minority carriers are the free electrons in the conduction band. Since the switch is closed in Fig. 2-23, the majority carriers flow to the right, and the minority carriers flow to the left.

2-13 The Energy Hill

To understand more advanced types of semiconductor devices, you will need to know how energy levels control the action of a *pn* junction.

Before Diffusion

Assuming an abrupt junction (one that suddenly changes from *p* to *n* material), what does the energy diagram look like? Figure 2-24*a* shows the energy bands before electrons have diffused across the junction. The *p* side has many holes in the valence band, and the *n* side has many electrons in the conduction band. But why are the *p* bands slightly higher than the *n* bands?

The *p* side has trivalent atoms with a core charge of +3, shown in Fig. 2-24*b*. On the other hand, the *n* side has pentavalent atoms with a core charge of +5 (Fig. 2-24*c*). A +3 core attracts an electron less than a +5 core does. Therefore, the orbits of a trivalent atom (*p* side) are slightly larger than those of a pentavalent atom (*n* side). This is why the *p* bands of Fig. 2-24a are slightly higher than the *n* bands.

An abrupt junction like that of Fig. 2-24*a* is an idealization because the *p* side cannot suddenly end where the *n* side begins. A manufactured diode has a gradual change from one material to the other. For this reason, Fig. 2-25*a* is a more realistic energy diagram of a junction diode.

At Equilibrium

When the diode is first formed, there is no depletion layer (Fig. 2-25*a*). In this case, free electrons will diffuse across the junction. In terms of energy levels, this means that the electrons near the top of the *n* conduction band move across the junction, as previously described. Soon after crossing the junction, a free electron will recombine with a hole. In other words, the electron will fall from the conduction band to the valence band. As it does, it emits heat, light, and other radiation. This recombination not only creates the depletion layer, it also changes the

Figure 2-24 (*a*) Energy bands of abrupt junction before diffusion; (*b*) *p*-type atom has larger orbits, equivalent to higher energy level; (*c*) *n*-type atom has smaller orbits, equivalent to lower energy level.

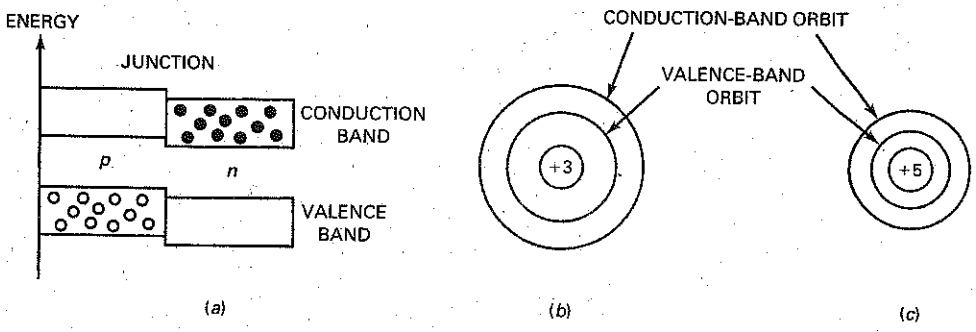

Figure 2-25 (*a*) Energy bands before diffusion; (*b*) energy bands after depletion layer is formed; (*c*) *p*-type atom before diffusion has smaller orbit; (*d*) *p*-type atom after diffusion has larger orbit, equivalent to higher energy level.

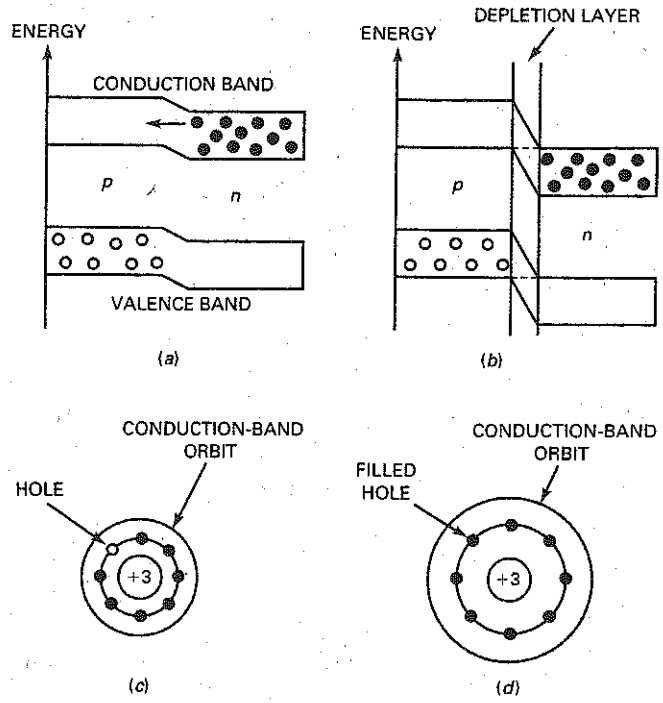

energy levels at the junction by increasing the energy level difference between the *p* and *n* bands.

Figure 2-25*b* shows the energy diagram after the depletion layer is created. The *p* bands have moved up with respect to the *n* bands. As you can see, the bottom of each *p* band is level with the top of the corresponding *n* band. This means that electrons on the *n* side no longer have enough energy to get across the junction. What follows is a simplified explanation of why the *p* band moves up.

Figure 2-25*c* shows a conduction-band orbit around one of the trivalent atoms before diffusion has occurred. When an electron diffuses across the junction, it falls into the hole of a trivalent atom (Fig. 2-25*d*). This extra electron in the valence orbit will push the conduction-band orbit farther away from the trivalent atom, as shown in Fig. 2-25*d*. Therefore, any new electrons coming into this area will need more energy than before to travel in a conduction-band orbit. Stated another way, the larger conduction-band orbit means that the energy level has increased. This is equivalent to saying that the *p* bands move up with respect to the *n* bands after the depletion layer has built up.

At equilibrium, conduction-band electrons on the *n* side travel in orbits not quite large enough to match the *p* side orbits (Fig. 2-25*b*). In other words, electrons on the *n* side do not have enough energy to get across the junction. To an electron trying to diffuse across the junction, the path it must travel looks like a hill, an energy hill (see Fig. 2-25*b*). The electron cannot climb this hill unless it receives energy from an outside source. This energy source may be a voltage source, but it can also be heat, light, or other radiation. Do not think of the energy

Figure 2-26. Forward bias gives free electrons more energy, equivalent to higher energy level.

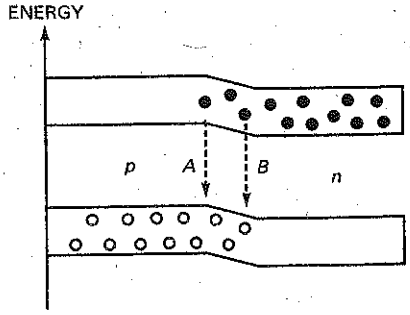

hill as a "physical" hill. Instead, think of it as the necessary higher energy level for the valence electrons to "rise" to before they can cross the depletion layer.

Forward Bias

Forward bias lowers the energy hill (see Fig. 2-26). In other words, the battery increases the energy level of the free electrons; this is equivalent to forcing the *n* band upward. Because of this, free electrons have enough energy to enter the *p* region. Soon after entering the *p* region, they fall into holes (path *A*). As valence electrons, they continue moving toward the left end of the crystal; this is equivalent to holes moving toward the junction.

Some holes penetrate the *n* region as shown in Fig. 2-26. In this case, conduction-band electrons can follow recombination path *B*. Regardless of where the recombination takes place, the result is the same. A steady stream of free electrons moves toward the junction and falls into holes near the junction. The captured electrons (now valence electrons) move left in a steady stream through the holes in the *p* region. In this way, we get a continuous flow of electrons through the diode.

Incidentally, when free electrons fall from the conduction band to the valence band, they radiate their excess energy in the form of heat and light. With an ordinary diode, the radiation is heat energy, which serves no useful purpose. But with an LED, the radiation can be light such as red, green, blue, or orange. LEDs are widely used as visual indicators on electronic instruments, computer keyboards, and consumer equipment.

2-14 Barrier Potential and Temperature

The **junction temperature** is the temperature inside a diode, right at the *pn* junction. The *ambient temperature* is different. It is the temperature of the air outside the diode, the air that surrounds the diode. When the diode is conducting, the junction temperature is higher than the ambient temperature because of the heat created by recombination.

The barrier potential depends on the junction temperature. An increase in junction temperature creates more free electrons and holes in the doped regions. As these charges diffuse into the depletion layer, it becomes narrower. This means that there is *less barrier potential at higher junction temperatures.*

Before continuing, we need to define a symbol:

$$\Delta = \text{the change in} \tag{2-2}$$

The Greek letter Δ (delta) stands for "the change in." For instance, ΔV means the change in voltage, and ΔT means the change in temperature. The ratio $\Delta V/\Delta T$ stands for the change in voltage divided by the change in temperature.

Now we can state a rule for estimating the change in barrier potential: *The barrier potential of a silicon diode decreases by 2 mV for each degree Celsius rise.*

As a derivation:

$$\frac{\Delta V}{\Delta T} = -2 \text{ mV/°C} \tag{2-3}$$

By rearranging:

$$\Delta V = (-2 \text{ mV/°C})\, \Delta T \tag{2-4}$$

With this, we can calculate the barrier potential at any junction temperature.

Example 2-5

Assuming a barrier potential of 0.7 V at an ambient temperature of 25°C, what is the barrier potential of a silicon diode when the junction temperature is 100°C? At 0°C?

SOLUTION When the junction temperature is 100°C, the change in barrier potential is:

$$\Delta V = (-2 \text{ mV/°C})\, \Delta T = (-2 \text{ mV/°C})(100°\text{C} - 25°\text{C}) = -150 \text{ mV}$$

This tells us that the barrier potential decreases 150 mV from its room temperature value. So, it equals:

$$V_B = 0.7 \text{ V} - 0.15 \text{ V} = 0.55 \text{ V}$$

When the junction temperature is 0°C, the change in barrier potential is:

$$\Delta V = (-2 \text{ mV/°C})\, \Delta T = (-2 \text{ mV/°C})(0°\text{C} - 25°\text{C}) = 50 \text{ mV}$$

This tells us that the barrier potential increases 50 mV from its room temperature value. So, it equals:

$$V_B = 0.7 \text{ V} + 0.05 \text{ V} = 0.75 \text{ V}$$

PRACTICE PROBLEM 2-5 What would be the barrier potential in Example 2-5 when the junction temperature is 50°C?

2-15 Reverse-Biased Diode

Let's discuss a few advanced ideas about a reverse-biased diode. To begin with, the depletion layer changes in width when the reverse voltage changes. Let us see what this implies.

Transient Current

When the reverse voltage increases, holes and electrons move away from the junction. As the free electrons and holes move away from the junction, they leave positive and negative ions behind. Therefore, the depletion layer gets wider. The greater the reverse bias, the wider the depletion layer becomes. While the depletion layer is adjusting to its new width, a current flows in the external circuit. This transient current drops to zero after the depletion layer stops growing.

The amount of time the transient current flows depends on the *RC* time constant of the external circuit. It typically happens in a matter of nanoseconds. Because of this, you can ignore the effects of the transient current below approximately 10 MHz.

Reverse Saturation Current

As discussed earlier, forward-biasing a diode raises the *n* band and allows free electrons to cross the junction. Reverse bias has the opposite effect: It widens the depletion layer and lowers the *n* band, as shown in Fig. 2-27.

Here is the energy viewpoint on reverse saturation. Suppose that thermal energy creates a hole and free electron inside the depletion layer, as shown in Fig. 2-27. The free electron at *A* and the hole at *B* can now contribute to reverse current. Because of the reverse bias, the free electron will move to the right, effectively pushing an electron out of the right end of the diode. Similarly, the hole will move to the left. This extra hole on the *p* side lets an electron enter the left end of the crystal.

The higher the junction temperature, the greater the saturation current. A useful approximation to remember is this: I_S doubles for each 10°C rise. As a derivation,

$$\textbf{Percent } \Delta I_S = 100\% \textbf{ for a } 10°\text{C increase} \tag{2-5}$$

In words, the change in saturation current is 100 percent for each 10°C rise in temperature. If the changes in temperature are less than 10°C, you can use this equivalent rule:

$$\textbf{Percent } \Delta I_S = 7\% \textbf{ per } °\text{C} \tag{2-6}$$

In words, the change in saturation current is 7 percent for each Celsius degree rise. This 7 percent solution is a close approximation of the 10° rule.

Figure 2-27 Thermal energy produces free electron and hole inside depletion layer.

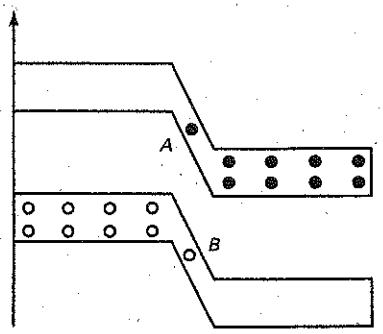

Figure 2-28 (*a*) Atoms on the surface of a crystal have no neighbors; (*b*) surface of crystal has holes.

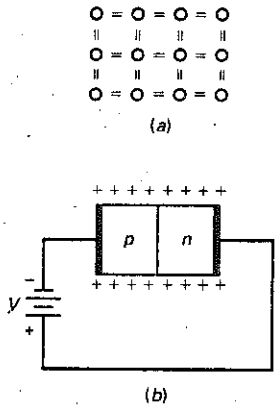

Silicon versus Germanium

In a silicon atom, the distance between the valence band and the conduction band is called the *energy gap*. When thermal energy produces free electrons and holes, it has to give the valence electrons enough energy to jump into the conduction band. The larger the energy gap, the more difficult it is for thermal energy to produce electron-hole pairs. Fortunately, silicon has a large energy gap; this means that thermal energy does not produce many electron-hole pairs at normal temperatures.

In a germanium atom the valence band is much closer to the conduction band. In other words, germanium has a much smaller energy gap than silicon has. For this reason, thermal energy produces many more electron-hole pairs in germanium devices. This is the fatal flaw mentioned earlier. The excessive reverse current of germanium devices precludes their widespread use in modern computers, consumer electronics, and communications circuits.

Surface-Leakage Current

We discussed surface-leakage current briefly in Sec. 2-10. Recall that it is a reverse current on the surface of the crystal. Here is an explanation of why surface-leakage current exists. Suppose that the atoms at the top and bottom of Fig. 2-28*a* are on the surface of the crystal. Since these atoms have no neighbors, they have only six electrons in the valence orbit, implying two holes in each surface atom. Visualize these holes along the surface of the crystal shown in Fig. 2-28*b*. Then you can see that the skin of a crystal is like a *p*-type semiconductor. Because of this, electrons can enter the left end of the crystal, travel through the surface holes, and leave the right end of the crystal. In this way, we get a small reverse current along the surface.

The surface-leakage current is directly proportional to the reverse voltage. For instance, if you double the reverse voltage, the surface-leakage current I_{SL} doubles. We can define the surface-leakage resistance as follows:

$$R_{SL} = \frac{V_R}{I_{SL}} \tag{2-7}$$

Example 2-6

A silicon diode has a saturation current of 5 nA at 25°C. What is the saturation current at 100°C?

SOLUTION The change in temperature is:

$$\Delta T = 100°C - 25°C = 75°C$$

With Eq. (2-5), there are seven doublings between 25°C and 95°C:

$$I_S = (2^7)(5\text{ nA}) = 640\text{ nA}$$

With Eq. (2-6), there are an additional 5° between 95°C and 100°C:

$$I_S = (1.07^5)(640\text{ nA}) = 898\text{ nA}$$

PRACTICE PROBLEM 2-6 Using the same diode as in Example 2-6, what would be the saturation current at 80°C?

Example 2-7

If the surface-leakage current is 2 nA for a reverse voltage of 25 V, what is the surface-leakage current for a reverse voltage of 35 V?

SOLUTION There are two ways to solve this problem. First, calculate the surface-leakage resistance:

$$R_{SL} = \frac{25\text{ V}}{2\text{ nA}} = 12.5(10^9)\ \Omega$$

Then, calculate the surface-leakage current at 35 V as follows:

$$I_{SL} = \frac{35\text{ V}}{12.5(10^9)\ \Omega} = 2.8\text{ nA}$$

Here is a second method. Since surface-leakage current is directly proportional to reverse voltage:

$$I_{SL} = \frac{35\text{ V}}{25\text{ V}}\,2\text{ nA} = 2.8\text{ nA}$$

PRACTICE PROBLEM 2-7 In Example 2-7, what is the surface-leakage current for a reverse voltage of 100 V?

Summary

SEC. 2-1 CONDUCTORS

A neutral copper atom has only one electron in its outer orbit. Since this single electron can be easily dislodged from its atom, it is called a *free electron*. Copper is a good conductor because the slightest voltage causes free electrons to flow from one atom to the next.

SEC. 2-2 SEMICONDUCTORS

Silicon is the most widely used semiconductor material. An isolated silicon atom has four electrons in its outer or valence orbit. The number of electrons in the valence orbit is the key to conductivity. Conductors have one valence electron, semiconductors have four valence electrons, and insulators have eight valence electrons.

SEC. 2-3 SILICON CRYSTALS

Each silicon atom in a crystal has its four valence electrons plus four more electrons that are shared by the neighboring atoms. At room temperature, a pure silicon crystal has only a few thermally produced free electrons and holes. The amount of time between the creation and recombination of a free electron and a hole is called the *lifetime*.

SEC. 2-4 INTRINSIC SEMICONDUCTORS

An intrinsic semiconductor is a pure semiconductor. When an external voltage is applied to the intrinsic semiconductor, the free electrons flow toward the positive battery terminal and the holes flow toward the negative battery terminal.

SEC. 2-5 TWO TYPES OF FLOW

Two types of carrier flow exist in an intrinsic semiconductor. First, there is the flow of free electrons through larger orbits (conduction band). Second, there is the flow of holes through smaller orbits (valence band).

SEC. 2-6 DOPING A SEMICONDUCTOR

Doping increases the conductivity of a semiconductor. A doped semiconductor is called an *extrinsic semiconductor*. When an intrinsic semiconductor is doped with pentavalent (donor) atoms, it has more free electrons than holes. When an intrinsic semiconductor is doped with trivalent (acceptor) atoms, it has more holes than free electrons.

SEC. 2-7 TWO TYPES OF EXTRINSIC SEMICONDUCTORS

In an *n*-type semiconductor the free electrons are the majority carriers, and the holes are the minority carriers. In a *p*-type semiconductor the holes are the majority carriers, and the free electrons are the minority carriers.

SEC. 2-8 THE UNBIASED DIODE

An unbiased diode has a depletion layer at the *pn* junction. The ions in this depletion layer produce a barrier potential. At room temperature, this barrier potential is approximately 0.7 V for a silicon diode and 0.3 V for a germanium diode.

SEC. 2-9 FORWARD BIAS

When an external voltage opposes the barrier potential, the diode is forward-biased. If the applied voltage is greater than the barrier potential, the current is large. In other words, current flows easily in a forward-biased diode.

SEC. 2-10 REVERSE BIAS

When an external voltage aids the barrier potential, the diode is reverse-biased. The width of the depletion layer increases when the reverse voltage increases. The current is approximately zero.

SEC. 2-11 BREAKDOWN

Too much reverse voltage will produce either avalanche or zener effect. Then, the large breakdown current destroys the diode. In general, diodes are never operated in the breakdown region. The only exception is the zener diode, a special-purpose diode discussed in a later chapter.

SEC. 2-12 ENERGY LEVELS

The larger the orbit, the higher the energy level of an electron. If an outside force raises an electron to a higher energy level, the electron will emit energy when it falls back to its original orbit.

SEC. 2-13 THE ENERGY HILL

The barrier potential of a diode looks like an energy hill. Electrons attempting to cross the junction need to have enough energy to climb this hill. An external voltage source that forward-biases the diode gives electrons the energy required to pass through the depletion layer.

SEC. 2-14 BARRIER POTENTIAL AND TEMPERATURE

When the junction temperature increases, the depletion layer becomes narrower and the barrier potential decreases. It will decrease approximately 2 mV for each degree Celsius increase.

SEC. 2-15 REVERSE-BIASED DIODE

There are three components of reverse current in a diode. First, there is the transient current that occurs when the reverse voltage changes. Second, there is the minority-carrier current, also called the *saturation current* because it is independent of the reverse voltage. Third, there is the surface-leakage current. It increases when the reverse voltage increases.

Definitions

(2-2) Δ = the change in

(2-7) $R_{SL} = \dfrac{V_R}{I_{SL}}$

Laws

(2-1) Valence saturation: $n = 8$

Derivations

(2-3) $\dfrac{\Delta V}{\Delta T} = -2\ \text{mV/°C}$

(2-4) $\Delta V = (-2\ \text{mV/°C})\,\Delta T$

(2-5) Percent ΔI_S = 100% for a 10°C increase

(2-6) Percent ΔI_S = 7% per°C

Student Assignments

1. **The nucleus of a copper atom contains how many protons?**
   a. 1
   b. 4
   c. 18
   d. 29

2. **The net charge of a neutral copper atom is**
   a. 0
   b. +1
   c. −1
   d. +4

3. **Assume the valence electron is removed from a copper atom. The net charge of the atom becomes**
   a. 0
   b. +1
   c. −1
   d. +4

4. **The valence electron of a copper atom experiences what kind of attraction toward the nucleus?**
   a. None
   b. Weak
   c. Strong
   d. Impossible to say

5. **How many valence electrons does a silicon atom have?**
   a. 0
   b. 1
   c. 2
   d. 4

6. **Which is the most widely used semiconductor?**
   a. Copper
   b. Germanium
   c. Silicon
   d. None of the above

7. **How many protons does the nucleus of a silicon atom contain?**
   a. 4
   b. 14
   c. 29
   d. 32

8. **Silicon atoms combine into an orderly pattern called a**
   a. Covalent bond
   b. Crystal
   c. Semiconductor
   d. Valence orbit

9. **An intrinsic semiconductor has some holes in it at room temperature. What causes these holes?**
   a. Doping
   b. Free electrons
   c. Thermal energy
   d. Valence electrons

10. **When an electron is moved to a higher orbit level, its energy level with respect to the nucleus**
   a. Increases
   b. Decreases
   c. Remains the same
   d. Depends on the type of atom

11. **The merging of a free electron and a hole is called**
   a. Covalent bonding
   b. Lifetime
   c. Recombination
   d. Thermal energy

12. **At room temperature an intrinsic silicon crystal acts approximately like**
   a. A battery
   b. A conductor
   c. An insulator
   d. A piece of copper wire

13. **The amount of time between the creation of a hole and its disappearance is called**
   a. Doping
   b. Lifetime
   c. Recombination
   d. Valence

14. **The valence electron of a conductor can also be called a**
   a. Bound electron
   b. Free electron
   c. Nucleus
   d. Proton

15. **A conductor has how many types of flow?**
   a. 1
   b. 2
   c. 3
   d. 4

16. **A semiconductor has how many types of flow?**
   a. 1
   b. 2
   c. 3
   d. 4

17. **When a voltage is applied to a semiconductor, holes will flow**
   a. Away from the negative potential
   b. Toward the positive potential
   c. In the external circuit
   d. None of the above

18. **For semiconductor material, its valence orbit is saturated when it contains**
   a. 1 electron
   b. Equal (+) and (−) ions
   c. 4 electrons
   d. 8 electrons

19. **In an intrinsic semiconductor, the number of holes**
   a. Equals the number of free electrons
   b. Is greater than the number of free electrons
   c. Is less than the number of free electrons
   d. None of the above

20. **Absolute zero temperature equals**
   a. −273°C
   b. 0°C
   c. 25°C
   d. 50°C

21. **At absolute zero temperature an intrinsic semiconductor has**
   a. A few free electrons
   b. Many holes
   c. Many free electrons
   d. No holes or free electrons

22. **At room temperature an intrinsic semiconductor has**
   a. A few free electrons and holes
   b. Many holes
   c. Many free electrons
   d. No holes

23. **The number of free electrons and holes in an intrinsic semiconductor decreases when the temperature**
   a. Decreases
   b. Increases
   c. Stays the same
   d. None of the above

24. **The flow of valence electrons to the right means that holes are flowing to the**
   a. Left
   b. Right
   c. Either way
   d. None of the above

25. **Holes act like**
   a. Atoms
   b. Crystals
   c. Negative charges
   d. Positive charges

26. **Trivalent atoms have how many valence electrons?**
   a. 1
   b. 3
   c. 4
   d. 5

27. **An acceptor atom has how many valence electrons?**
   a. 1
   b. 3
   c. 4
   d. 5

28. **If you wanted to produce an *n*-type semiconductor, which of these would you use?**
   a. Acceptor atoms
   b. Donor atoms
   c. Pentavalent impurity
   d. Silicon

29. **Electrons are the minority carriers in which type of semiconductor?**
   a. Extrinsic
   b. Intrinsic
   c. *n*-type
   d. *p*-type

30. **How many free electrons does a *p*-type semiconductor contain?**
   a. Many
   b. None
   c. Only those produced by thermal energy
   d. Same number as holes

31. **Silver is the best conductor. How many valence electrons do you think it has?**
   a. 1
   b. 4
   c. 18
   d. 29

32. **Suppose an intrinsic semiconductor has 1 billion free electrons at room temperature. If the temperature drops to 0°C, how many holes are there?**
   a. Fewer than 1 billion
   b. 1 billion
   c. More than 1 billion
   d. Impossible to say

33. **An external voltage source is applied to a *p*-type semiconductor. If the left end of the crystal is positive, which way do the majority carriers flow?**
   a. Left
   b. Right
   c. Neither
   d. Impossible to say

34. **Which of the following doesn't fit in the group?**
   a. Conductor
   b. Semiconductor
   c. Four valence electrons
   d. Crystal structure

35. **Which of the following is approximately equal to room temperature?**
   a. 0°C
   b. 25°C
   c. 50°C
   d. 75°C

36. **How many electrons are there in the valence orbit of a silicon atom within a crystal?**
   a. 1
   b. 4
   c. 8
   d. 14

37. **Negative ions are atoms that have**
   a. Gained a proton
   b. Lost a proton
   c. Gained an electron
   d. Lost an electron

38. **Which of the following describes an *n*-type semiconductor?**
   a. Neutral
   b. Positively charged
   c. Negatively charged
   d. Has many holes

39. **A *p*-type semiconductor contains holes and**
   a. Positive ions
   b. Negative ions
   c. Pentavalent atoms
   d. Donor atoms

40. **Which of the following describes a *p*-type semiconductor?**
   a. Neutral
   b. Positively charged
   c. Negatively charged
   d. Has many free electrons

41. **As compared to a germanium diode, a silicon diode's reverse saturation current is**
   a. Equal at high temperatures
   b. Lower
   c. Equal at lower temperatures
   d. Higher

42. **What causes the depletion layer?**
   a. Doping
   b. Recombination
   c. Barrier potential
   d. Ions

43. **What is the barrier potential of a silicon diode at room temperature?**
   a. 0.3 V
   b. 0.7 V
   c. 1 V
   d. 2 mV per degree Celsius

44. **When comparing the energy gap of germanium and silicon atoms, a silicon atom's energy gap is**
   a. About the same
   b. Lower
   c. Higher
   d. Unpredictable

45. **In a silicon diode the reverse current is usually**
   a. Very small
   b. Very large
   c. Zero
   d. In the breakdown region

46. **While maintaining a constant temperature, a silicon diode has its reverse-bias voltage increased. The diode's saturation current will**
   a. Increase
   b. Decrease
   c. Remain the same
   d. Equal its surface-leakage current

47. **The voltage where avalanche occurs is called the**
   a. Barrier potential
   b. Depletion layer
   c. Knee voltage
   d. Breakdown voltage

48. **The energy hill of diode's *pn* junction will decrease when the diode is**
   a. Forward biased
   b. First formed
   c. Reverse biased
   d. Not conducting

49. **When the reverse voltage decreases from 10 to 5 V, the depletion layer**
   a. Becomes smaller
   b. Becomes larger
   c. Is unaffected
   d. Breaks down

50. **When a diode is forward-biased, the recombination of free electrons and holes may produce**

a. Heat
b. Light
c. Radiation
d. All of the above

51. **A reverse voltage of 10 V is across a diode. What is the voltage across the depletion layer?**

a. 0 V
b. 0.7 V
c. 10 V
d. None of the above

52. **The energy gap in a silicon atom is the distance between the valence band and the**

a. Nucleus
b. Conduction band
c. Atom's core
d. Positive ions

53. **The reverse saturation current doubles when the junction temperature increases**

a. 1°C
b. 2°C
c. 4°C
d. 10°C

54. **The surface-leakage current doubles when the reverse voltage increases**

a. 7%
b. 100%
c. 200%
d. 2 mV

Problems

2-1 What is the net charge of a copper atom if it gains two electrons?

2-2 What is the net charge of a silicon atom if it gains three valence electrons?

2-3 Classify each of the following as conductor or semiconductor:

a. Germanium
b. Silver
c. Silicon
d. Gold

2-4 If a pure silicon crystal has 500,000 holes inside it, how many free electrons does it have?

2-5 A diode is forward biased. If the current is 5 mA through the *n* side, what is the current through each of the following?

a. *p* side
b. External connecting wires
c. Junction

2-6 Classify each of the following as *n*-type or *p*-type semiconductors:

a. Doped by acceptor atoms
b. Crystal with pentavalent impurities
c. Majority carriers are holes
d. Donor atoms were added to crystal
e. Minority carriers are free electrons

2-7 A designer will be using a silicon diode over a temperature range of 0° to 75°C. What are the minimum and maximum values of barrier potential?

2-8 If a silicon diode has a saturation current of 10 nA at 25° to 75°C, what are the minimum and maximum values of saturation current?

2-9 A diode has a surface-leakage current of 10 nA when the reverse voltage is 10 V. What is the surface-leakage current if the reverse voltage is increased to 100 V?

Critical Thinking

2-10 A silicon diode has a reverse current of 5 μA at 25°C and 100 μA at 100°C. What are values of the saturation current and the surface-leakage current at 25°C?

2-11 Devices with *pn* junctions are used to build computers. The speed of computers depends on how fast a diode can be turned off and on. Based on what you have learned about reverse bias, what can we do to speed up a computer?

Job Interview Questions

A team of experts in electronics created these questions. In most cases, the text provides enough information to answer all questions. Occasionally, you may come across a term that is not familiar. If this happens, look up the term in a technical dictionary. Also, a question may appear that is not covered in this text. In this case, you may wish to do some library research.

1. Tell me why copper is a good conductor of electricity.
2. How does a semiconductor differ from a conductor? Include sketches in your explanation.

3. Tell me all you know about holes and how they differ from free electrons. Include some drawings.
4. Give me the basic idea of doping semiconductors. I want to see some sketches that support your explanation.
5. Show me, by drawing and explaining the action, why current exists in a forward-biased diode.
6. Tell me why a very small current exists in a reverse-biased diode.
7. A reverse-biased semiconductor diode will break down under certain conditions. I want you to describe avalanche in enough detail so that I can understand it.
8. I want to know why a light-emitting diode produces light. Tell me about it.
9. Do holes flow in a conductor? Why or why not? What happens to holes when they reach the end of a semiconductor?
10. What is surface leakage current?
11. Why is recombination important in a diode?
12. How does extrinsic silicon differ from intrinsic silicon, and why is the difference important?
13. In your own words, describe the action that takes place when the *pn* junction is initially created. Your discussion should include the formation of the depletion layer.
14. In a *pn* junction diode, which of the charge carriers move? Holes or free electrons?

Self-Test Answers

1.	d	19.	a	37.	c
2.	a	20.	a	38.	a
3.	b	21.	d	39.	b
4.	b	22.	a	40.	a
5.	d	23.	a	41.	b
6.	c	24.	a	42.	b
7.	b	25.	d	43.	b
8.	b	26.	b	44.	c
9.	c	27.	b	45.	a
10.	a	28.	b	46.	c
11.	c	29.	d	47.	d
12.	c	30.	c	48.	a
13.	b	31.	a	49.	a
14.	b	32.	a	50.	d
15.	a	33.	b	51.	c
16.	b	34.	a	52.	b
17.	d	35.	b	53.	d
18.	d	36.	c	54.	b

Practice Problem Answers

2-4 Approximately 5 million holes

2-5 $V_B = 0.65$ V

2-6 $I_S = 224$ nA

2-7 $i_{SL} = 8$ nA

chapter 3

Diode Theory

- This chapter continues our study of diodes. After discussing the diode curve, we look at approximations of a diode. We need approximations because exact analysis is very tedious and time-consuming in most situations. For instance, an ideal approximation is usually adequate for troubleshooting, and a second approximation gives quick and easy solutions in many cases. Beyond this, we can use a third approximation for better accuracy or a computer solution for almost exact answers.

Objectives

After studying this chapter, you should be able to:

- Draw a diode symbol and label the anode and cathode.
- Draw a diode curve and label all significant points and areas.
- Describe the ideal diode.
- Describe the second approximation.
- Describe the third approximation.
- List four basic characteristics of diodes shown on a data sheet.
- Describe how to test a diode using a DMM and VOM.

Chapter Outline

3-1 Basic Ideas

3-2 The Ideal Diode

3-3 The Second Approximation

3-4 The Third Approximation

3-5 Troubleshooting

3-6 Up-Down Circuit Analysis

3-7 Reading a Data Sheet

3-8 How to Calculate Bulk Resistance

3-9 DC Resistance of a Diode

3-10 Load Lines

3-11 Surface-Mount Diodes

Vocabulary

anode
bulk resistance
cathode
ideal diode
knee voltage
linear device
load line
maximum forward current
nonlinear device
ohmic resistance
power rating
up-down analysis

3-1 Basic Ideas

An ordinary resistor is a **linear device** because the graph of its current versus voltage is a straight line. A diode is different. It is a **nonlinear device** because the graph of its current versus voltage is not a straight line. The reason is the barrier potential. When the diode voltage is less than the barrier potential, the diode current is small. When the diode voltage exceeds the barrier potential, the diode current increases rapidly.

The Schematic Symbol and Case Styles

Figure 3-1*a* shows the schematic symbol of a diode. The *p* side is called the **anode,** and the *n* side the **cathode.** The diode symbol looks like an arrow that points from the *p* side to the *n* side, from the anode to the cathode. Figure 3-1*b* shows some of the many typical diode case styles. Many, but not all, diodes have the cathode lead (K) identified by a colored band.

Basic Diode Circuit

Figure 3-1*c* shows a diode circuit. In this circuit, the diode is forward biased. How do we know? Because the positive battery terminal drives the *p* side through a resistor, and the negative battery terminal is connected to the *n* side. With this connection, the circuit is trying to push holes and free electrons toward the junction.

In more complicated circuits, it may be difficult to decide whether the diode is forward biased. Here is a guideline. Ask yourself this question: Is the external circuit pushing current in the *easy direction* of flow? If the answer is yes, the diode is forward biased.

What is the easy direction of flow? If you use conventional current, the easy direction is the same direction as the diode arrow. If you prefer electron flow, the easy direction is the other way.

Figure 3-1 Diode. (*a*) Schematic symbol; (*b*) diode case styles; (*c*) forward bias.

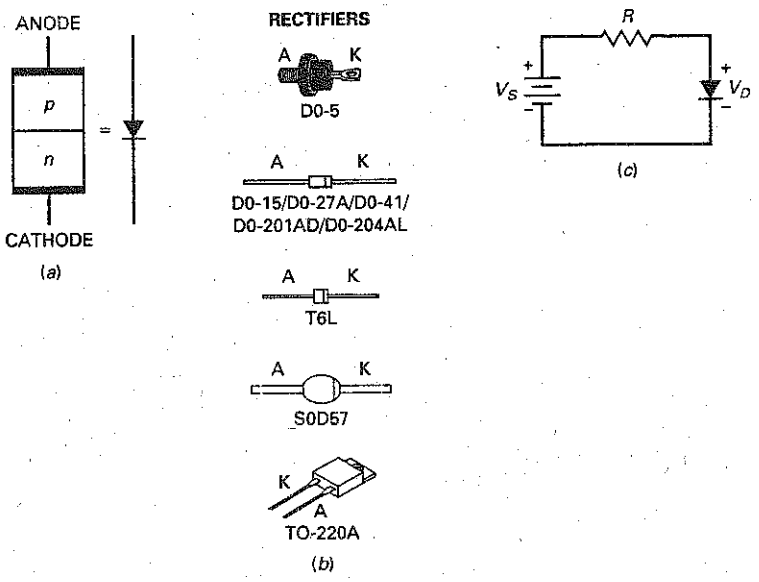

Figure 3-2 Diode curve.

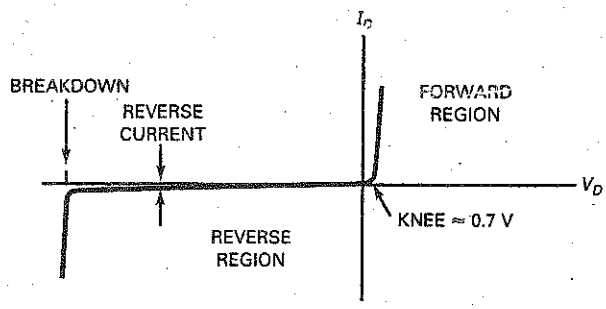

When the diode is part of a complicated circuit, we also can use Thevenin's theorem to determine whether it is forward biased. For instance, assume that we have reduced a complicated circuit with Thevenin's theorem to get Fig. 3-1*c*. We would know that the diode is forward biased.

The Forward Region

Figure 3-1*c* is a circuit that you can set up in the laboratory. After you connect this circuit, you can measure the diode current and voltage. You can also reverse the polarity of the dc source and measure diode current and voltage for reverse bias. If you plot the diode current versus the diode voltage, you will get a graph that looks like Fig. 3-2.

This is a visual summary of the ideas discussed in the preceding chapter. For instance, when the diode is forward biased, there is no significant current until the diode voltage is greater than the barrier potential. On the other hand, when the diode is reverse biased, there is almost no reverse current until the diode voltage reaches the breakdown voltage. Then, avalanche produces a large reverse current, destroying the diode.

Knee Voltage

In the forward region, the voltage at which the current starts to increase rapidly is called the **knee voltage** of the diode. The knee voltage equals the barrier potential. Analysis of diode circuits usually comes down to determining whether the diode voltage is more or less than the knee voltage. If it's more, the diode conducts easily. If it's less, the diode conducts poorly. We define the knee voltage of a silicon diode as:

$$V_K \approx 0.7 \text{ V} \tag{3-1}$$

(*Note:* The symbol ≈ means "approximately equal to.")

Even though germanium diodes are rarely used in new designs, you may still encounter germanium diodes in special circuits or in older equipment. For this reason, remember that the knee voltage of a germanium diode is approximately 0.3 V. This lower knee voltage is an advantage and accounts for the use of a germanium diode in certain applications.

Bulk Resistance

Above the knee voltage, the diode current increases rapidly. This means that small increases in the diode voltage cause large increases in diode current. After the

barrier potential is overcome, all that impedes the current is the **ohmic resistance** of the p and n regions. In other words, if the p and n regions were two separate pieces of semiconductor, each would have a resistance that you could measure with an ohmmeter, the same as an ordinary resistor.

The sum of the ohmic resistances is called the **bulk resistance** of the diode. It is defined as:

$$R_B = R_P + R_N \tag{3-2}$$

The bulk resistance depends on the size of the p and n regions, and how heavily doped they are. Often, the bulk resistance is less than 1 Ω.

Maximum DC Forward Current

If the current in a diode is too large, the excessive heat can destroy the diode. For this reason, a manufacturer's data sheet specifies the maximum current a diode can safely handle without shortening its life or degrading its characteristics.

The **maximum forward current** is one of the maximum ratings given on a data sheet. This current may be listed as I_{max}, $I_{F(max)}$, I_O, etc., depending on the manufacturer. For instance, a 1N456 has a maximum forward current rating of 135 mA. This means that it can safely handle a continuous forward current of 135 mA.

Power Dissipation

You can calculate the power dissipation of a diode the same way as you do for a resistor. It equals the product of diode voltage and current. As a formula:

$$P_D = V_D I_D \tag{3-3}$$

The **power rating** is the maximum power the diode can safely dissipate without shortening its life or degrading its properties. In symbols, the definition is:

$$P_{max} = V_{max} I_{max} \tag{3-4}$$

where V_{max} is the voltage corresponding to I_{max}. For instance, if a diode has a maximum voltage and current of 1 V and 2 A, its power rating is 2 W.

Example 3-1

MultiSim

Is the diode of Fig. 3-3*a* forward biased or reverse biased?

SOLUTION The voltage across R_2 is positive; therefore, the circuit is trying to push current in the easy direction of flow. If this is not clear, visualize the Thevenin circuit facing the diode as shown in Fig. 3-3*b*. In this series circuit, you can see that the dc source is trying to push current in the easy direction of flow. Therefore, the diode is forward biased.

Whenever in doubt, reduce the circuit to a series circuit. Then, it will be clear whether the dc source is trying to push current in the easy direction or not.

Figure 3-3

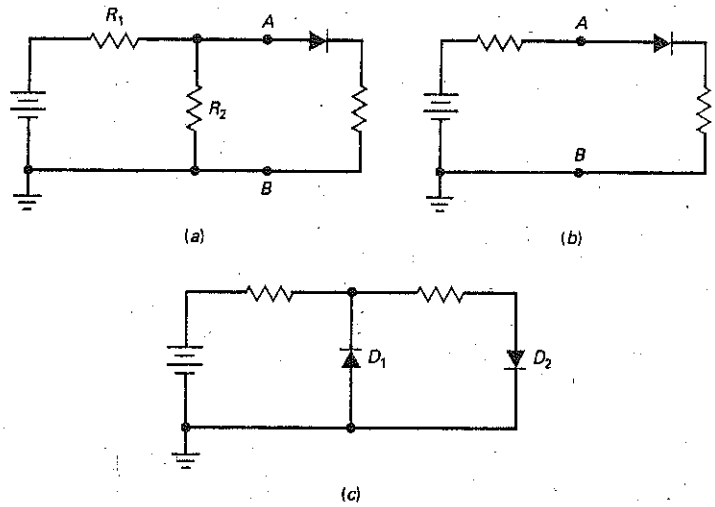

PRACTICE PROBLEM 3-1 Are the diodes of Fig. 3-3*c* forward biased or reverse biased?

Example 3-2

A diode has a power rating of 5 W. If the diode voltage is 1.2 V and the diode current is 1.75 A, what is the power dissipation? Will the diode be destroyed?

SOLUTION

$$P_D = (1.2\text{ V})(1.75\text{ A}) = 2.1\text{ W}$$

This is less than the power rating, so the diode will not be destroyed.

PRACTICE PROBLEM 3-2 Referring to Example 3-2, what is the diode's power dissipation if the diode voltage is 1.1 V and the diode current is 2 A?

3-2 The Ideal Diode

Figure 3-4 shows a detailed graph of the forward region of a diode. Here you see the diode current I_D versus diode voltage V_D. Notice how the current is approximately zero until the diode voltage approaches the barrier potential. Somewhere in the vicinity of 0.6 to 0.7 V, the diode current increases. When the diode voltage is greater than 0.8 V, the diode current is significant and the graph is almost linear.

Depending on how a diode is doped and its physical size, it may differ from other diodes in its maximum forward current, power rating, and other characteristics. If we need an exact solution, we would have to use the graph of

Figure 3-4 Graph of forward current.

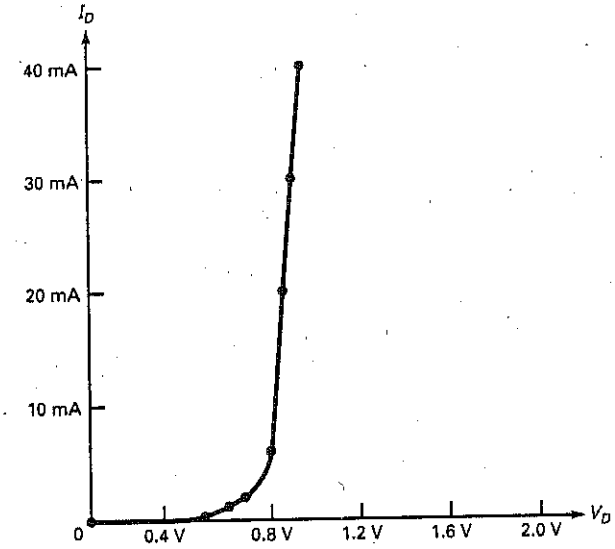

the particular diode. Although the exact current and voltage points will differ from one diode to the next, the graph of any diode is similar to Fig. 3-4. All silicon diodes have a knee voltage of approximately 0.7 V.

Most of the time, we do not need an exact solution. This is why we can and should use approximations for a diode. We will begin with the simplest approximation, called an **ideal diode.** In the most basic terms, what does a diode do? It conducts well in the forward direction and poorly in the reverse direction. Ideally, a diode acts like a perfect conductor (zero resistance) when forward biased and like a perfect insulator (infinite resistance) when reverse biased.

Figure 3-5*a* shows the current-voltage graph of an ideal diode. It echoes what we just said: zero resistance when forward biased and infinite resistance when reverse biased. It is impossible to build such a device, but this is what manufacturers would produce if they could.

Is there any device that acts like an ideal diode? Yes. An ordinary switch has zero resistance when closed and infinite resistance when open. Therefore, an ideal diode acts like a switch that closes when forward biased and opens when reverse biased. Figure 3-5*b* summarizes the switch idea.

Figure 3-5 (*a*) Ideal diode curve; (*b*) ideal diode acts like a switch.

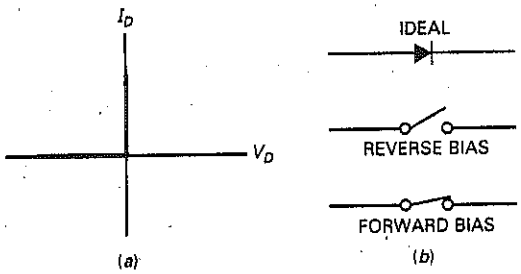

Example 3-3

Use the ideal diode to calculate the load voltage and load current in Fig. 3-6*a*.

SOLUTION Since the diode is forward biased, it is equivalent to a closed switch. Visualize the diode as a closed switch. Then, you can see that all of the source voltage appears across the load resistor:

$$V_L = 10\text{ V}$$

With Ohm's law, the load current is:

$$I_L = \frac{10\text{ V}}{1\text{ k}\Omega} = 10\text{ mA}$$

PRACTICE PROBLEM 3-3 In Fig. 3-6*a*, find the ideal load current if the source voltage is 5 V.

Example 3-4

Calculate the load voltage and load current in Fig. 3-6*b* using an ideal diode.

Figure 3-6

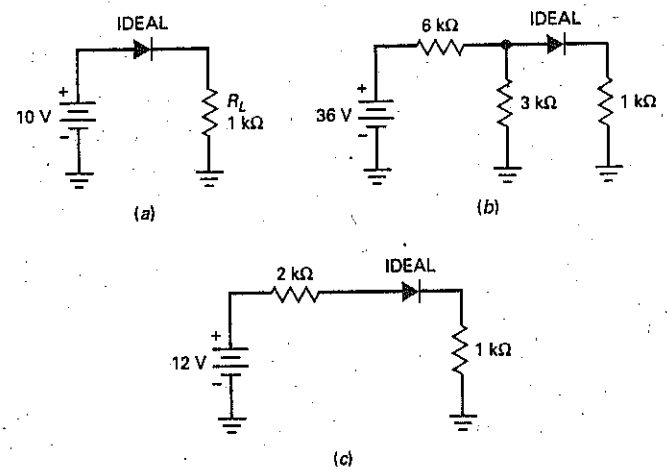

SOLUTION One way to solve this problem is to Thevenize the circuit to the left of the diode. Looking from the diode back toward the source, we see a voltage divider with 6 kΩ and 3 kΩ. The Thevenin voltage is 12 V, and the Thevenin resistance is 2 kΩ. Figure 3-6*c* shows the Thevenin circuit driving the diode. (If you have any problem understanding this, review Example 1-3.)

Now that we have a series circuit, we can see that the diode is forward biased. Visualize the diode as a closed switch. Then, the remaining calculations are:

$$I_L = \frac{12\text{ V}}{3\text{ k}\Omega} = 4\text{ mA}$$

and

$$V_L = (4\text{ mA})(1\text{ k}\Omega) = 4\text{ V}$$

You don't have to use Thevenin's theorem. You can analyze Fig. 3-6*b* by visualizing the diode as a closed switch. Then, you have 3 kΩ in parallel with 1 kΩ, equivalent to 750 Ω. Using Ohm's law, you can calculate a voltage drop of 32 V across the 6 kΩ. The rest of the analysis produces the same load voltage and load current.

PRACTICE PROBLEM 3-4 Using Fig. 3-6*b*, change the 36 V source to 18 V and solve for the load voltage and load current using an ideal diode.

3-3 The Second Approximation

The ideal approximation is all right in most troubleshooting situations. But we are not always troubleshooting. Sometimes, we want a more accurate value for load current and load voltage. This is where the *second approximation* comes in.

Figure 3-7*a* shows the graph of current versus voltage for the second approximation. The graph says that no current exists until 0.7 V appears across the diode. At this point, the diode turns on. Thereafter, only 0.7 V can appear across the diode, no matter what the current.

Figure 3-7*b* shows the equivalent circuit for the second approximation of a silicon diode. We think of the diode as a switch in series with a barrier potential of 0.7 V. If the Thevenin voltage facing the diode is greater than 0.7 V, the switch will close. When conducting, then the diode voltage is 0.7 V for any forward current.

On the other hand, if the Thevenin voltage is less than 0.7 V, the switch will open. In this case, there is no current through the diode.

GOOD TO KNOW

When you troubleshoot a circuit that contains a silicon diode that is supposed to be forward biased, a diode voltage measurement much greater than 0.7 V means that the diode has failed and is in fact open.

Figure 3-7 (*a*) Diode curve for second approximation; (*b*) equivalent circuit for second approximation.

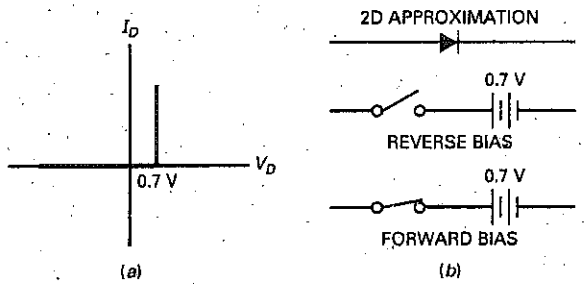

Example 3-5

Figure 3-8

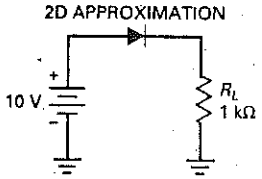

Use the second approximation to calculate the load voltage, load current, and diode power in Fig. 3-8.

SOLUTION Since the diode is forward biased, it is equivalent to a battery of 0.7 V. This means that the load voltage equals the source voltage minus the diode drop:

$$V_L = 10\text{ V} - 0.7\text{ V} = 9.3\text{ V}$$

With Ohm's law, the load current is:

$$I_L = \frac{9.3\text{ V}}{1\text{ k}\Omega} = 9.3\text{ mA}$$

The diode power is

$$P_D = (0.7\text{ V})(9.3\text{ mA}) = 6.51\text{ mW}$$

PRACTICE PROBLEM 3-5 Using Fig. 3-8, change the source voltage to 5 V and calculate the new load voltage, current, and diode power.

Example 3-6

Calculate the load voltage, load current, and diode power in Fig. 3-9*a* using the second approximation.

Figure 3-9 (*a*) Original circuit; (*b*) simplified with Thevenin's theorem.

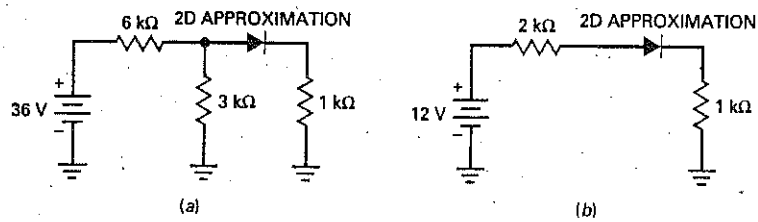

SOLUTION Again, we will Thevenize the circuit to the left of the diode. As before, the Thevenin voltage is 12 V and the Thevenin resistance is 2 kΩ. Figure 3-9*b* shows the simplified circuit.

Since the diode voltage is 0.7 V, the load current is:

$$I_L = \frac{12\text{ V} - 0.7\text{ V}}{3\text{ k}\Omega} = 3.77\text{ mA}$$

The load voltage is:

$$V_L = (3.77\text{ mA})(1\text{ k}\Omega) = 3.77\text{ V}$$

and the diode power is:

$$P_D = (0.7\text{ V})(3.77\text{ mA}) = 2.64\text{ mW}$$

PRACTICE PROBLEM 3-6 Repeat Example 3-6 using 18 V as the voltage source value.

Figure 3-10 (*a*) Diode curve for third approximation; (*b*) equivalent circuit for third approximation.

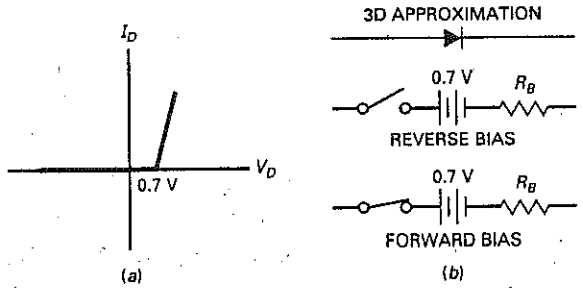

3-4 The Third Approximation

In the *third approximation* of a diode, we include the bulk resistance R_B. Figure 3-10*a* shows the effect that R_B has on the diode curve. After the silicon diode turns on, the voltage increases linearly with an increase in current. The greater the current, the larger the diode voltage because of the voltage drop across the bulk resistance.

The equivalent circuit for the third approximation is a switch in series with a barrier potential of 0.7 V and a resistance of R_B (see Fig. 3-10*b*). When the diode voltage is larger than 0.7 V, the diode conducts. During conduction, the total voltage across the diode is:

$$V_D = 0.7\text{ V} + I_D R_B \tag{3-5}$$

Often, the bulk resistance is less than 1 Ω, and we can safely ignore it in our calculations. A useful guideline for ignoring bulk resistance is this definition:

$$\textbf{Ignore bulk: } R_B < 0.01 R_{TH} \tag{3-6}$$

This says to ignore the bulk resistance when it is less than 1/100 of the Thevenin resistance facing the diode. When this condition is satisfied, the error is less than 1 percent. The third approximation is rarely used by technicians because circuit designers usually satisfy Eq. (3-6).

Example 3-7

The 1N4001 of Fig. 3-11*a* has a bulk resistance of 0.23 Ω. What is the load voltage, load current, and diode power?

SOLUTION Replacing the diode by its third approximation, we get Fig. 3-11*b*. The bulk resistance is small enough to ignore because it is less than 1/100 of the load resistance. In this case, we can use the second approximation to solve the problem. We already did this in Example 3-6, where we found a load voltage, load current, and diode power of 9.3 V, 9.3 mA, and 6.51 mW.

Figure 3-11

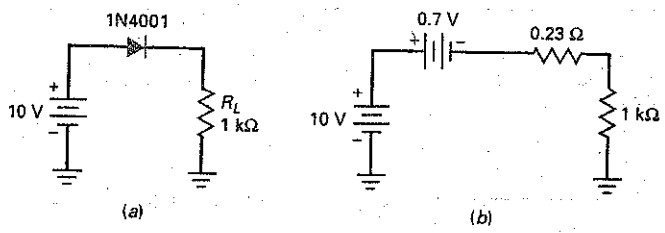

Example 3-8

Repeat the preceding example for a load resistance of 10 Ω.

SOLUTION Figure 3-12*a* shows the equivalent circuit. The total resistance is:

$$R_T = 0.23\ \Omega + 10\ \Omega = 10.23\ \Omega$$

The total voltage across R_T is:

$$V_T = 10\text{ V} - 0.7\text{ V} = 9.3\text{ V}$$

Therefore, the load current is:

$$I_L = \frac{9.3\text{ V}}{10.23\ \Omega} = 0.909\text{ A}$$

The load voltage is:

$$V_L = (0.909\text{ A})(10\ \Omega) = 9.09\text{ V}$$

Figure 3-12

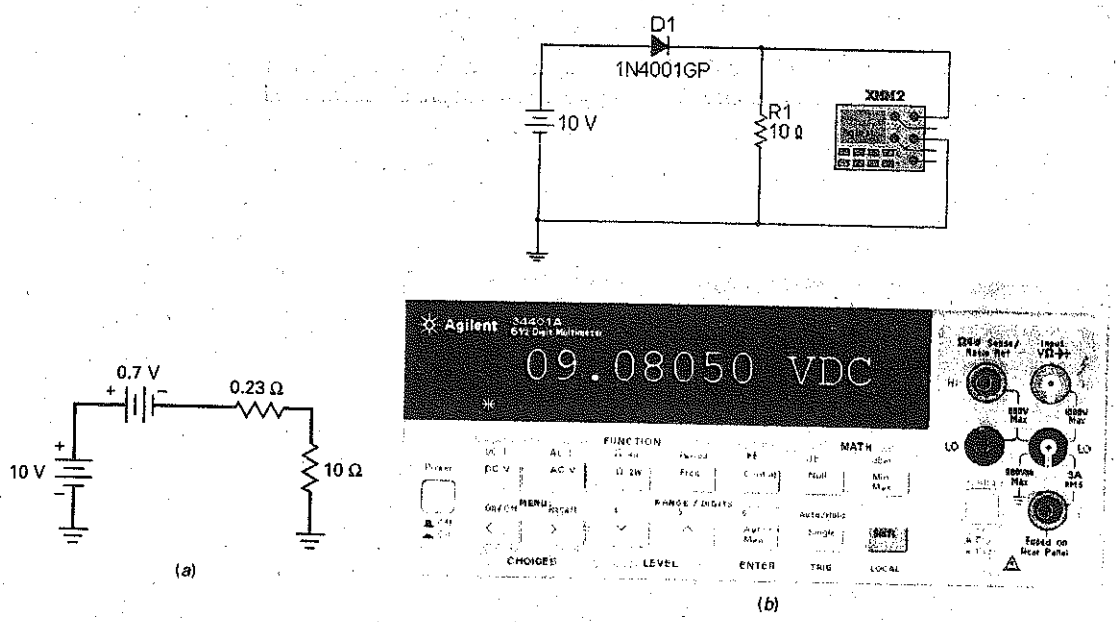

To calculate the diode power, we need to know the diode voltage. We can get this in either of two ways. We can subtract the load voltage from the source voltage:

$$V_D = 10\text{ V} - 9.09\text{ V} = 0.91\text{ V}$$

or we can use Eq. (3-5):

$$V_D = 0.7\text{ V} + (0.909\text{ A})(0.23\ \Omega) = 0.909\text{ V}$$

The slight difference in the last two answers is caused by rounding. The diode power is:

$$P_D = (0.909\text{ V})(0.909\text{ A}) = 0.826\text{ W}$$

Two more points. First, the 1N4001 has a maximum forward current of 1 A and a power rating of 1 W, so the diode is being pushed to its limits with a load resistance of 10 Ω. Second, the load voltage calculated with the third approximation is 9.09 V, which is in very close agreement with the MultiSim load voltage of 9.08 V (see Fig. 3-12*b*).

Summary Table 3-1 illustrates the differences between the three diode approximations.

Summary Table 3–1 Diode Approximations

	First or ideal	Second or practical	Third
When used	Troubleshooting or quick analysis	Analysis at technician level	High-level or engineering-level analysis
Diode curve	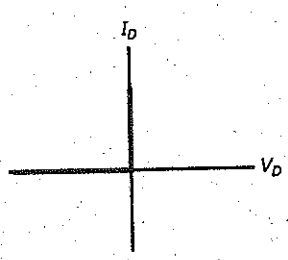	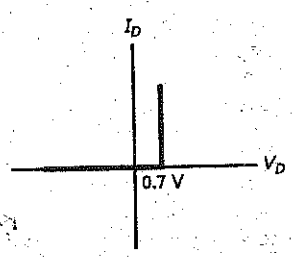	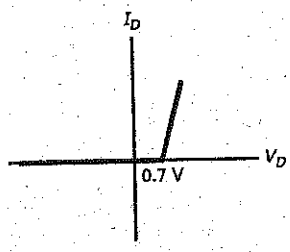
Equivalent circuit	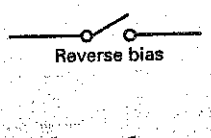 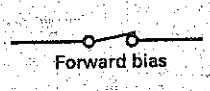	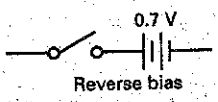 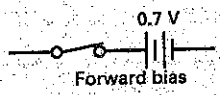	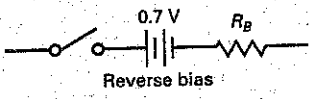 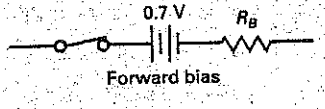
Circuit example	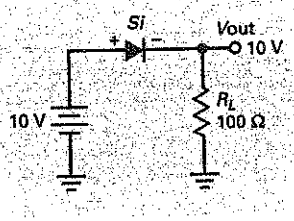	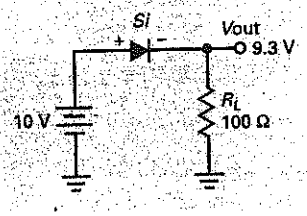	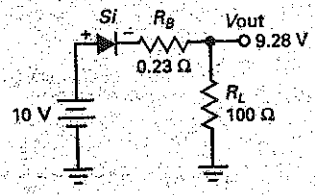

PRACTICE PROBLEM 3–8 Repeat Example 3-8 using 5 V as the voltage source value.

3-5 Troubleshooting

You can quickly check the condition of a diode with an ohmmeter on a medium-to-high resistance range. Measure the dc resistance of the diode in either direction, and then reverse the leads and measure the dc resistance again. The forward current will depend on which ohmmeter range is used, which means that you get different readings on different ranges.

The main thing to look for, however, is a high ratio of reverse to forward resistance. For typical silicon diodes used in electronics work, the ratio should be higher than 1000:1. Remember to use a high enough resistance range to avoid the possibility of diode damage. Normally, the R × 100 or R × 1K ranges will provide proper safe measurements.

Using an ohmmeter to check diodes is an example of go/no-go testing. You're really not interested in the exact dc resistance of the diode; all you want to know is whether the diode has a low resistance in the forward direction and a high resistance in the reverse direction. Diode troubles are indicated for any of the following: extremely low resistance in both directions (diode shorted); high resistance in both directions (diode open); somewhat low resistance in the reverse direction (called a *leaky diode*).

When set to the ohms or resistance function, most digital multimeters (DMMs) do not have the required voltage and current output capability to properly test *pn*-junction diodes. Most DMMs do, however, have a special diode test range. When the meter is set to this range, it supplies a constant current of approximately 1 mA to whatever device is connected to its leads. When forward biased, the DMM will display the *pn*-junction's forward voltage V_F shown in Fig. 3-13*a*. This forward voltage will generally be between 0.5 V and 0.7 V for normal silicon *pn*-junction diodes. When the diode is reverse biased by the test leads, the meter will give an overrange indication such as "OL" or "1" on the display as shown in Fig. 3-13*b*. A shorted diode would display a voltage of less than 0.5 V in both directions. An open diode would be indicated by an overrange display in both directions. A leaky diode would display a voltage less than 2.0 V in both directions.

Figure 3-13 (*a*) DMM diode forward test.

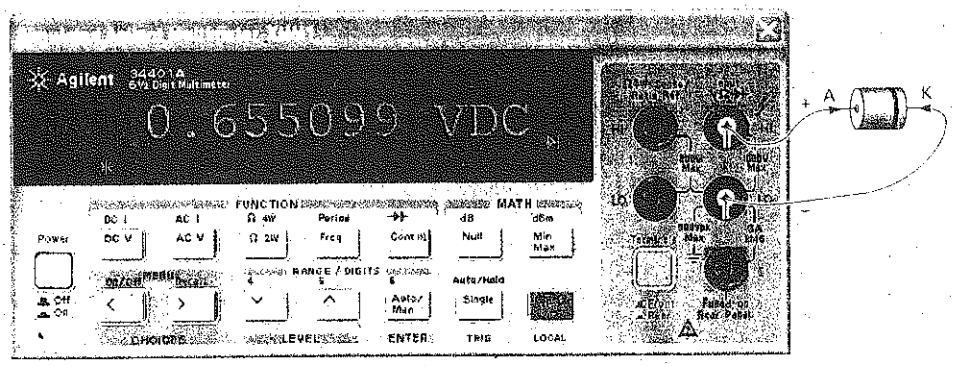

(*a*)

Figure 3-13 (*b*) DMM diode reverse test.

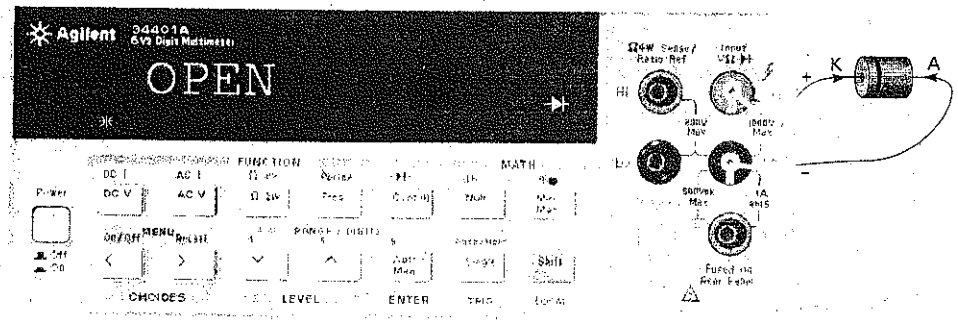

(*b*)

Example 3-9

Figure 3-14 Troubleshooting a circuit.

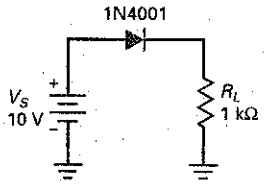

Figure 3-14 shows the diode circuit analyzed earlier. Suppose something causes the diode to burn out. What kind of symptoms will you get?

SOLUTION When a diode burns out, it becomes an open circuit. In this case, the current drops to zero. Therefore, if you measure the load voltage, the voltmeter will indicate zero.

Example 3-10

Suppose the circuit of Fig. 3-14 is not working. If the load is not shorted, what is the trouble?

SOLUTION Many troubles are possible. First, the diode could be open. Second, the supply voltage could be zero. Third, one of the connecting wires could be open.

How do you find the trouble? Measure the voltages to isolate the defective component. Then disconnect any suspected component and test its resistance. For instance, you could measure the source voltage first and the load voltage second. If there is source voltage but no load voltage, the diode may be open. An ohmmeter or DMM test will tell. If the diode passes the ohmmeter or DMM test, check the connections because there's nothing else to account for having source voltage but no load voltage.

If there is no source voltage, the power supply is defective or a connection between the supply and the diode is open. Power-supply troubles are common. Often, when electronics equipment is not working, the trouble is in the power supply. This is why most troubleshooters start by measuring the voltages out of the power supply.

Figure 3-15 Up-down analysis of a circuit.

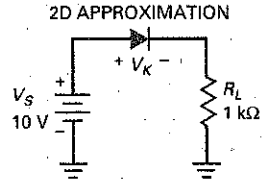

3-6 Up-Down Circuit Analysis

There is nothing quite like **up-down analysis** to help you understand circuits. The idea is this: Any circuit has independent variables (like source voltages and branch resistances) and dependent variables (like voltages across resistors, currents, and powers). When an independent variable increases, each of the dependent variables will usually respond by increasing or decreasing. If you understand how the circuit works, you will be able to predict whether a dependent variable will increase or decrease.

Here is how it works for Fig. 3-15. A voltage V_S of 10 V is applied to a diode in series with a load resistance R_L of 1 kΩ. In the second approximation of a diode, there are three independent variables for this circuit: V_S, R_L, and V_K. We are including the knee voltage as an independent variable because it may be slightly different from the ideal value of 0.7 V. There are five dependent variables as follows: V_L, I_L, P_D, P_L, and P_T. These are the load voltage, load current, diode power, load power, and total power.

Suppose the source voltage V_S increases slightly, say 10 percent. How will each of the dependent variables respond? Will each go up (U), go down (D), or show no change (N)? Here are some of the thoughts that might pass through your mind as you solve this problem:

> ***In the second approximation, the diode has a voltage drop of 0.7 V. If the source voltage increases slightly, the diode drop is still 0.7 V, which means that the load voltage has to increase. If the load voltage increases, the load current increases. An increase in load current means that the diode power and load power increase. The total power is the sum of diode power and load power, so total power must increase.***

The first row of Table 3-1 summarizes the effect of a small increase in source voltage. As you can see, each dependent variable increases.

What do you think happens when the load resistance of Fig. 3-15 increases slightly? Since the diode voltage is constant in the second approximation, the load voltage shows no change, but the load current will go down. This implies less diode power, load power, and total power. The second row of Table 3-1 summarizes this case.

Finally, consider the effect of knee voltage. If the knee voltage increases slightly in Fig. 3-15, the dependent variables decrease, except for the diode power, as shown in the third row of Table 3-1.

Look at Fig. 3-25 (at the end of the chapter). How do you use this to find dependent changes?

The way you can practice up-down analysis for the circuit is by selecting one independent variable (V_S, R_1, R_2, R_3, or V_K). Next, select any dependent variable (V_A, V_B, V_C, I_1, etc.). Then try to figure out whether the dependent variable goes up, goes down, or shows no change.

Table 3-1 Up-Down Analysis

	V_L	I_L	P_D	P_L	P_T
V_S increase	U	U	U	U	U
R_L increase	N	D	D	D	D
V_K increase	D	D	U	D	D

For instance, how does an increase in knee voltage affect the current in R_3? In Fig. 3-25, a stiff voltage divider drives the diode in series with the 100 kΩ. Therefore, a slight increase in knee voltage will decrease the voltage across the 100 kΩ. Then, Ohm's law tells us that I_3 should decrease.

A final point: Do not use a calculator for up-down circuit analysis. This would defeat the whole purpose of this type of thinking. Up-down circuit analysis is similar to troubleshooting because the emphasis is on logic rather than equations. The purpose of up-down analysis is to train your mind to get in touch with the circuit action. It does this by forcing you to think about how the different parts of the circuit interact.

3-7 Reading a Data Sheet

GOOD TO KNOW

Internet search engines, such as Google, can quickly help locate semiconductor specifications.

A data sheet, or specification sheet, lists important parameters and operating characteristics for semiconductor devices. Also, essential information such as case styles, pinouts, testing procedures, and typical applications can be obtained from a component's data sheet. Semiconductor manufacturers generally provide this information in data books or from the manufacturer's website. This information can also be found on the Internet by companies that specialize in cross-referencing or component substitution.

Much of the information on a manufacturer's data sheet is obscure and of use only to circuit designers. For this reason, we will discuss only those entries on the data sheet that describe quantities in this book.

Reverse Breakdown Voltage

Let us start with the data sheet for a 1N4001, a rectifier diode used in power supplies (circuits that convert ac voltage to dc voltage). Figure 3-16 shows a data sheet for the 1N4001 to 1N4007 series of diodes: seven diodes that have the same forward characteristics but differ in their reverse characteristics. We are interested in the 1N4001 member of this family. The first entry under "Absolute Maximum Ratings" is this:

	Symbol
Peak Repetitive Reverse Voltage	V_{RRM}

The breakdown voltage for this diode is 50 V. This breakdown occurs because the diode goes into avalanche when a huge number of carriers suddenly appears in the depletion layer. With a rectifier diode like the 1N4001, breakdown is usually destructive.

With the 1N4001, a reverse voltage of 50 V represents a destructive level that a designer avoids under all operating conditions. This is why a designer includes a *safety factor*. There is no absolute rule on how large to make the safety factor because it depends on too many design factors. A conservative design would use a safety factor of 2, which means never allowing a reverse voltage of more than 25 V across the 1N4001. A less-conservative design might allow as much as 40 V across the 1N4001.

On other data sheets, reverse breakdown voltage may be designated *PIV*, *PRV*, or *BV*.

Figure 3-16 Data sheet for 1N4001–1N4007 diodes.

FAIRCHILD SEMICONDUCTOR®

1N4001-1N4007

1N4001 - 1N4007

Features

- Low forward voltage drop.
- High surge current capability.

DO-41
COLOR BAND DENOTES CATHODE

General Purpose Rectifiers

Absolute Maximum Ratings* T_A = 25°C unless otherwise noted

Symbol	Parameter	Value							Units
		4001	4002	4003	4004	4005	4006	4007	
V_{RRM}	Peak Repetitive Reverse Voltage	50	100	200	400	600	800	1000	V
$I_{F(AV)}$	Average Rectified Forward Current, .375 " lead length @ T_A = 75°C	1.0							A
I_{FSM}	Non-repetitive Peak Forward Surge Current 8.3 ms Single Half-Sine-Wave	30							A
T_{stg}	Storage Temperature Range	-55 to +175							°C
T_J	Operating Junction Temperature	-55 to +175							°C

*These ratings are limiting values above which the serviceability of any semiconductor device may be impaired.

Thermal Characteristics

Symbol	Parameter	Value	Units
P_D	Power Dissipation	3.0	W
$R_{\theta JA}$	Thermal Resistance, Junction to Ambient	50	°C/W

Electrical Characteristics T_A = 25°C unless otherwise noted

Symbol	Parameter	Device							Units
		4001	4002	4003	4004	4005	4006	4007	
V_F	Forward Voltage @ 1.0 A	1.1							V
I_{rr}	Maximum Full Load Reverse Current, Full Cycle T_A = 75°C	30							µA
I_R	Reverse Current @ rated V_R T_A = 25°C T_A = 100°C	5.0 500							µA µA
C_T	Total Capacitance V_R = 4.0 V, f = 1.0 MHz	15							pF

©2003 Fairchild Semiconductor Corporation

(a)

1N4001-1N4007, Rev. C1

Figure 3-16 (continued)

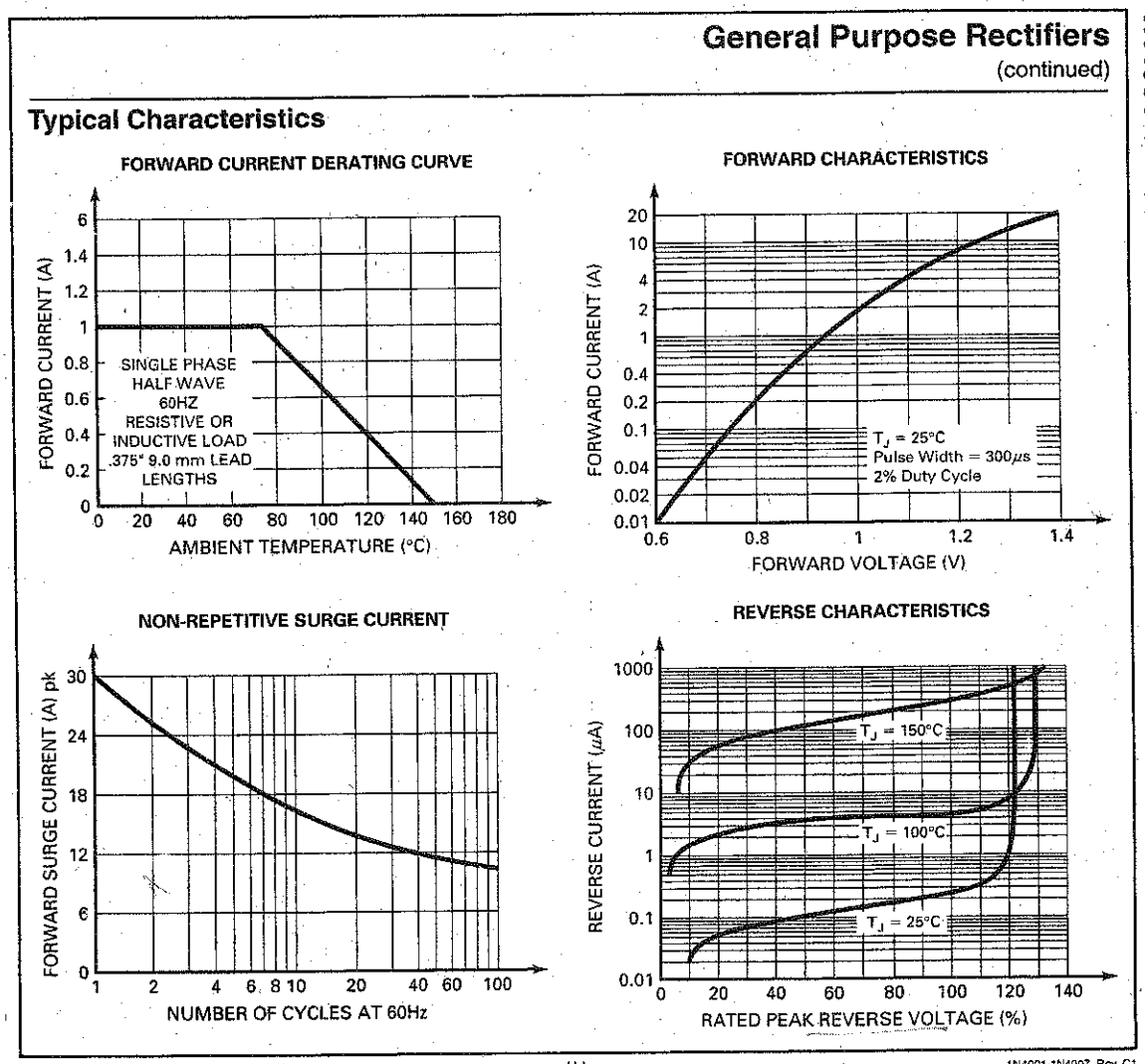

(b)

Maximum Forward Current

Another entry of interest is average rectified forward current, which looks like this on the data sheet:

	Symbol	Value
Average Rectified Forward Current @ T_A = 75°C	$I_{F(AV)}$	1 A

This entry tells us that the 1N4001 can handle up to 1 A in the forward direction when used as a rectifier. You will learn more about average rectified forward current in the next chapter. For now, all you need to know is that 1 A is the level of

forward current when the diode burns out because of excessive power dissipation. On other data sheets, the average current may be designated as I_o.

Again, a designer looks upon 1 A as the absolute maximum rating of the 1N4001, a level of forward current that should not even be approached. This is why a safety factor would be included—possibly a factor of 2. In other words, a reliable design would ensure that the forward current is less than 0.5 A under all operating conditions. Failure studies of devices show that the lifetime of a device decreases the closer you get to the maximum rating. This is why some designers use a safety factor of as much as 10:1. A really conservative design would keep the maximum forward current of the 1N4001 at 0.1 A or less.

Forward Voltage Drop

Under "Electrical Characteristics" in Fig. 3-16, the first entry shown gives you these data:

Characteristic and Conditions	Symbol	Maximum Value
Forward Voltage Drop		
$(i_F) = 1.0$ A, $T_A = 25°C$	v_F	1.1 V

As shown in Fig. 3-16 on the chart titled "Forward Characteristics," the typical 1N4001 has a forward voltage drop of 0.93 V when the current is 1 A and the junction temperature is 25°C. If you test thousands of 1N4001s, you will find that a few will have as much as 1.1 V across them when the current is 1 A.

Maximum Reverse Current

Another entry on the data sheet that is worth discussing is this one:

Characteristic and Conditions	Symbol	Typical Value	Maximum Value
Reverse Current	I_R		
$T_A = 25°C$		0.05 μA	10 μA
$T_A = 100°C$		1.0 μA	50 μA

This is the reverse current at the maximum reverse dc rated voltage (50 V for a 1N4001). At 25°C, the typical 1N4001 has a maximum reverse current of 5.0 μA. But notice how it increases to 500 μA at 100°C. Remember that this reverse current includes thermally produced saturation current and surface-leakage current. You can see from these numbers that temperature is important. A design that requires a reverse current of less than 5.0 μA will work fine at 25°C with a typical 1N4001, but will fail in mass production if the junction temperature reaches 100°C.

3-8 How to Calculate Bulk Resistance

When you are trying to analyze a diode circuit accurately, you will need to know the bulk resistance of the diode. Manufacturers' data sheets do not usually list the bulk resistance separately, but they do give enough information to allow you to calculate it. Here is the derivation for bulk resistance:

$$R_B = \frac{V_2 - V_1}{I_2 - I_1} \tag{3-7}$$

where V_1 and I_1 are the voltage and current at some point at or above the knee voltage; V_2 and I_2 are the voltage and current at some higher point on the diode curve.

For instance, the data sheet of a 1N4001 gives a forward voltage of 0.93 V for a current of 1 A. Since this is a silicon diode, it has a knee voltage of approximately 0.7 V and a current of approximately zero. Therefore, the values to use are $V_2 = 0.93$ V, $I_2 = 1$ A, $V_1 = 0.7$ V, and $I_1 = 0$. Substituting these values into equation, we get a bulk resistance of:

$$R_B = \frac{V_2 - V_1}{I_2 - I_1} = \frac{0.93\text{V} - 0.7\text{ V}}{1\text{ A} - 0\text{ A}} = \frac{0.23\text{ V}}{1\text{ A}} = 0.23\ \Omega$$

Incidentally, the diode curve is a graph of current versus voltage. The bulk resistance equals the inverse of the slope above the knee. The greater the slope of the diode curve, the smaller the bulk resistance. In other words, the more vertical the diode curve is above the knee, the lower the bulk resistance.

3-9 DC Resistance of a Diode

If you take the ratio of total diode voltage to total diode current, you get the *dc resistance* of the diode. In the forward direction, this dc resistance is symbolized by R_F; in the reverse direction, it is designated R_R.

Forward Resistance

Because the diode is a nonlinear device, its dc resistance varies with the current through it. For example, here are some pairs of forward current and voltage for a 1N914: 10 mA at 0.65 V, 30 mA at 0.75 V, and 50 mA at 0.85 V. At the first point, the dc resistance is:

$$R_F = \frac{0.65\text{ V}}{10\text{ mA}} = 65\ \Omega$$

At the second point:

$$R_F = \frac{0.75\text{ V}}{30\text{ mA}} = 25\ \Omega$$

And at the third point:

$$R_F = \frac{0.85\text{ mV}}{50\text{ mA}} = 17\ \Omega$$

Notice how the dc resistance decreases as the current increases. In any case, the forward resistance is low compared to the reverse resistance.

Reverse Resistance

Similarly, here are two sets of reverse current and voltage for a 1N914: 25 nA at 20 V; 5 μA at 75 V. At the first point, the dc resistance is:

$$R_R = \frac{20\text{ V}}{25\text{ nA}} = 800\text{ M}\Omega$$

At the second point:

$$R_R = \frac{75\text{ V}}{5\ \mu\text{A}} = 15\text{ M}\Omega$$

Notice how the dc resistance decreases as we approach the breakdown voltage (75 V).

DC Resistance versus Bulk Resistance

The dc resistance of a diode is different from the bulk resistance. The dc resistance of a diode equals the bulk resistance *plus* the effect of the barrier potential. In other words, the dc resistance of a diode is its total resistance, whereas the bulk resistance is the resistance of only the p and n regions. For this reason, the dc resistance of a diode is always greater than bulk resistance.

3-10 Load Lines

This section is about the **load line,** a tool used to find the exact value of diode current and voltage. Load lines are useful with transistors, so a detailed explanation will be given later in the transistor discussions.

Equation for the Load Line

How can we find the exact diode current and voltage in Fig. 3-17*a*? The current through the resistor is:

$$I_D = \frac{V_S - V_D}{R_s} \tag{3-8}$$

Because of the series circuit, this current is the same through the diode.

Figure 3-17 Load-line analysis.

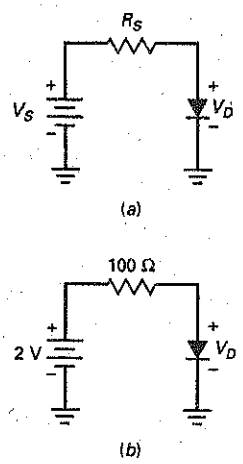

An Example

If the source voltage is 2 V and the resistance is 100 Ω as shown in Fig. 3-17*b*, then Eq. (3-8) becomes:

$$I_D = \frac{2 - V_D}{100} \tag{3-9}$$

Equation (3-9) is a linear relationship between current and voltage. If we plot this equation, we will get a straight line. For instance, let V_D equal zero. Then:

$$I_D = \frac{2\text{ V} - 0\text{ V}}{100\ \Omega} = 20\text{ mA}$$

Plotting this point ($I_D = 20$ mA, $V_D = 0$) gives the point on the vertical axis of Fig. 3-18. This point is called *saturation* because it represents maximum current with 2 V across 100 Ω.

Here's how to get another point. Let V_D equal 2 V. Then Eq. (3-9) gives:

$$I_D = \frac{2\text{ V} - 2\text{ V}}{100\ \Omega} = 0$$

When we plot this point ($I_D = 0$, $V_D = 2$ V), we get the point shown on the horizontal axis (Fig. 3-18). This point is called *cutoff* because it represents minimum current.

By selecting other voltages, we can calculate and plot additional points. Because Eq. (3-9) is linear, all points will lie on the straight line shown in Fig. 3-18. The straight line is called the *load line.*

The Q Point

Figure 3-18 shows the load line and a diode curve. The point of intersection, known as the Q point, represents a simultaneous solution between the diode curve and the load line. In other words, the Q point is the only point on the graph that works for both the diode and the circuit. By reading the coordinates of the Q point, we get a current of 12.5 mA and a diode voltage of 0.75 V.

Figure 3-18 Q point is the intersection of the diode curve and the load line.

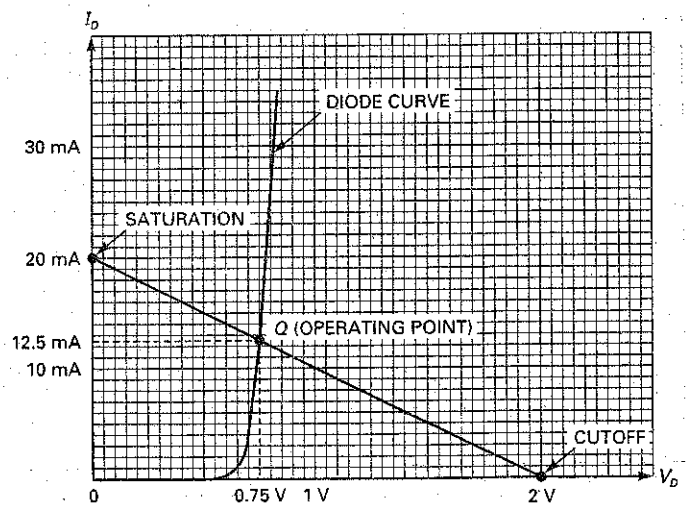

Incidentally, the Q point has no relationship to the figure of merit of a coil. In the present discussion, Q is an abbreviation for *quiescent,* which means "at rest." The quiescent or Q point of semiconductor circuits is discussed in later chapters.

3-11 Surface-Mount Diodes

Surface-mount (SM) diodes can be found anywhere there is a need for diode applications. SM diodes are small, efficient, and relatively easy to test, remove, and replace on the circuit board. Although there are a number of SM package styles, two basic styles dominate the industry: SM (surface mount) and SOT (small outline transistor).

The SM package has two L-bend leads and a colored band on one end of the body to indicate the cathode lead. Figure 3-19 shows a typical set of dimensions. The length and width of the SM package are related to the current rating of

Figure 3-19 The two-terminal SM-style package, used for SM diodes.

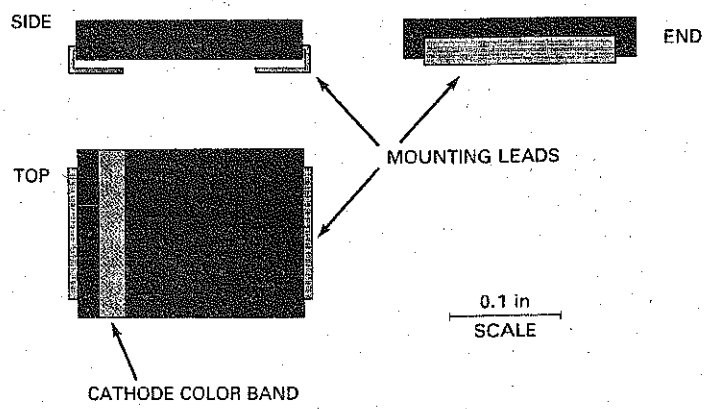

Figure 3-20 The SOT-23 is a three-terminal transistor package commonly used for SM diodes.

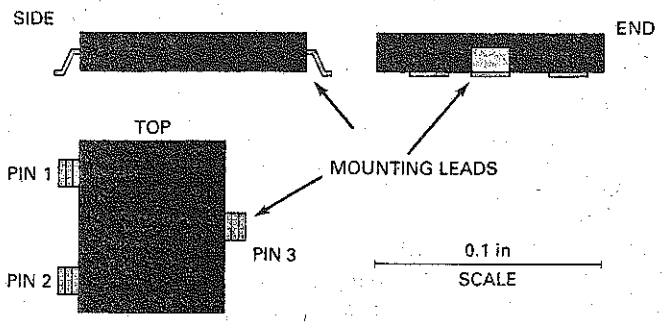

the device. The larger the surface area, the higher the current rating. So an SM diode rated at 1 A might have a surface area given by 0.181 by 0.115 in. The 3 A version, on the other hand, might measure 0.260 by 0.236 in. The thickness tends to remain at about 0.103 in for all current ratings.

Increasing the surface area of an SM-style diode increases its ability to dissipate heat. Also, the corresponding increase in the width of the mounting terminals increases the thermal conductance to a virtual heat sink made up of the solder joints, mounting lands, and the circuit board itself.

SOT-23 packages have three gull-wing terminals (see Fig. 3-20). The terminals are numbered counterclockwise from the top, pin 3 being alone on one side. However, there are no standard markings indicating which two terminals are used for the cathode and the anode. To determine the internal connections of the diode, you can look for clues printed on the circuit board, check the schematic diagram, or consult the diode manufacturer's data book. Some SOT-style packages include two diodes, which have a common-anode or common-cathode connection at one of the terminals.

Diodes in SOT-23 packages are small, no dimension being greater than 0.1 in. Their small size makes it difficult to dissipate larger amounts of heat, so the diodes are generally rated at less than 1 A. The small size also makes it impractical to label them with identification codes. As with many of the tiny SM devices, you have to determine the PIN from other clues on the circuit board and schematic diagram.

Summary

SEC. 3-1 BASIC IDEAS

A diode is a nonlinear device. The knee voltage, approximately 0.7 V for a silicon diode, is where the forward curve turns upward. The bulk resistance is the ohmic resistance of the *p* and *n* regions. Diodes have a maximum forward current and a power rating.

SEC. 3-2 THE IDEAL DIODE

This is the first approximation of a diode. The equivalent circuit is a switch that closes when forward biased and opens when reverse biased.

SEC. 3-3 THE SECOND APPROXIMATION

In this approximation, we visualize a silicon diode as a switch in series with a knee voltage of 0.7 V. If the Thevenin voltage facing the diode is greater than 0.7 V, the switch closes.

SEC. 3-4 THE THIRD APPROXIMATION

We seldom use this approximation because bulk resistance is usually small enough to ignore. In this approximation, we visualize the diode as a switch in series with a knee voltage and a bulk resistance.

SEC. 3-5 TROUBLESHOOTING

When you suspect that a diode is the trouble, remove it from the circuit and use an ohmmeter to measure its resistance in each direction. You should get a high resistance one way and a low resistance the other way, at least 1000:1 ratio. Remember to use a high enough resistance range when testing a diode, to avoid possible diode damage. A DMM will display 0.5–0.7 V when a diode is forward biased and an overrange indication when it is reverse biased.

SEC. 3-6 UP-DOWN CIRCUIT ANALYSIS

No calculation is required in this type of circuit analysis. All you are after is *up*, *down*, or *no change*. When you know beforehand how a dependent variable should respond to an increase in an independent variable, you will be more successful at troubleshooting, analysis, and design.

SEC. 3-7 READING A DATA SHEET

Data sheets are useful to a circuit designer and may be useful to a repair technician for selecting a substitute device, which is sometimes required. Diode data sheets from different manufacturers contain similar information, but different symbols are used to indicate different operating conditions. Diode data sheets may list the following: breakdown voltage (V_R, V_{RRM}, V_{RWM}, PIV, PRV, BV), maximum forward current ($I_{F(max)}$, $I_{F(av)}$, I_0), forward voltage drop ($V_{F(max)}$, V_F), and maximum reverse current $I_{R(max)}$, I_{RRM}).

SEC. 3-8 HOW TO CALCULATE BULK RESISTANCE

You need two points in the forward region of the third approximation. One point can be 0.7 V with zero current. The second point comes from the data sheet at a large forward current where both a voltage and a current are given.

SEC. 3-9 DC RESISTANCE OF A DIODE

The dc resistance equals the diode voltage divided by the diode current at some operating point. This resistance is what an ohmmeter will measure. DC resistance has limited application, aside from telling you that it is small in the forward direction and large in the reverse direction.

SEC. 3-10 LOAD LINES

The current and voltage in a diode circuit have to satisfy both the diode curve and Ohm's law for the load resistor. These are two separate requirements that graphically translate to the intersection of the diode curve and the load line.

SEC. 3-11 SURFACE-MOUNT DIODES

Surface-mount diodes are often found on modern electronics circuits boards. These diodes are small, efficient, and typically found either as an SM (surface mount) or an SOT (small outline transistor) case style.

Definitions

(3-1) Silicon knee voltage:

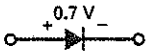

$V_K \approx 0.7\ \text{V}$

(3-2) Bulk resistance:

$R_B = R_P + R_N$

(3-4) Maximum power dissipation

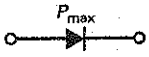

$P_{max} = V_{max} I_{max}$

(3-6) Ignore bulk:

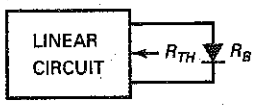

$R_B < 0.01 R_{TH}$

Derivations

(3-3) Diode power dissipation:

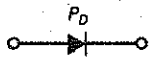

$P_D = V_D I_D$

(3-5) Third approximation:

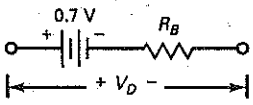

$V_D = 0.7\ \text{V} + I_D R_B$

(3-7) Bulk resistance:

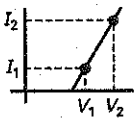

$$R_B = \frac{V_2 - V_1}{I_2 - I_1}$$

Student Assignments

1. When the graph of current versus voltage is a straight line, the device is referred to as
   a. Active
   b. Linear
   c. Nonlinear
   d. Passive

2. What kind of device is a resistor?
   a. Unilateral
   b. Linear
   c. Nonlinear
   d. Bipolar

3. What kind of a device is a diode?
   a. Bilateral
   b. Linear
   c. Nonlinear
   d. Unipolar

4. How is a nonconducting diode biased?
   a. Forward
   b. Inverse
   c. Poorly
   d. Reverse

5. When the diode current is large, the bias is
   a. Forward
   b. Inverse
   c. Poor
   d. Reverse

6. The knee voltage of a diode is approximately equal to the
   a. Applied voltage
   b. Barrier potential
   c. Breakdown voltage
   d. Forward voltage

7. The reverse current consists of minority-carrier current and
   a. Avalanche current
   b. Forward current
   c. Surface-leakage current
   d. Zener current

8. How much voltage is there across the second approximation of a silicon diode when it is forward biased?
   a. 0
   b. 0.3 V
   c. 0.7 V
   d. 1 V

9. How much current is there through the second approximation of a silicon diode when it is reverse biased?
   a. 0
   b. 1 mA
   c. 300 mA
   d. None of the above

10. How much forward diode voltage is there with the ideal-diode approximation?
    a. 0
    b. 0.7 V
    c. More than 0.7 V
    d. 1 V

11. The bulk resistance of a 1N4001 is
    a. 0
    b. 0.23 Ω
    c. 10 Ω
    d. 1 kΩ

12. If the bulk resistance is zero, the graph above the knee becomes
    a. Horizontal
    b. Vertical
    c. Tilted at 45°
    d. None of the above

13. The ideal diode is usually adequate when
    a. Troubleshooting
    b. Doing precise calculations
    c. The source voltage is low
    d. The load resistance is low

14. The second approximation works well when
    a. Troubleshooting
    b. Load resistance is high
    c. Source voltage is high
    d. All of the above

15. The only time you have to use the third approximation is when
    a. Load resistance is low
    b. Source voltage is high
    c. Troubleshooting
    d. None of the above

16. MultiSim How much load current is there in Fig. 3-21 with the ideal diode?
    a. 0 c. 12 mA
    b. 11.3 mA d. 25 mA

Figure 3-21

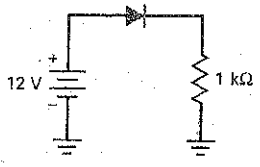

17. MultiSim How much load current is there in Fig. 3-21 with the second approximation?
    a. 0
    b. 11.3 mA
    c. 12 mA
    d. 25 mA

18. MultiSim How much load current is there in Fig. 3-21 with the third approximation?
    a. 0
    b. 11.3 mA
    c. 12 mA
    d. 25 mA

19. MultiSim If the diode is open in Fig. 3-21, the load voltage is
    a. 0
    b. 11.3 V
    c. 20 V
    d. −15 V

20. MultiSim If the resistor is ungrounded in Fig. 3-21, the voltage measured with a DMM between the top of the resistor and ground is closest to
    a. 0 c. 20 V
    b. 12 V d. −15 V

21. MultiSim The load voltage measures 12 V in Fig. 3-21. The trouble may be
    a. A shorted diode
    b. An open diode
    c. An open load resistor
    d. Too much supply voltage

22. Using the third approximation in Fig. 3-21, how low must R_L be before the diode's bulk resistance must be considered?
    a. 1 Ω c. 23 Ω
    b. 10 Ω d. 100 Ω

Problems

SEC. 3-1 BASIC IDEAS

3-1 A diode is in series with 220 Ω. If the voltage across the resistor is 6 V, what is the current through the diode?

3-2 A diode has a voltage of 0.7 V and a current of 100 mA. What is the diode power?

3-3 Two diodes are in series. The first diode has a voltage of 0.75 V and the second has a voltage of 0.8 V. If the current through the first diode is 400 mA, what is the current through the second diode?

SEC. 3-2 THE IDEAL DIODE

3-4 In Fig. 3-22*a*, calculate the load current, load voltage, load power, diode power, and total power.

3-5 If the resistor is doubled in Fig. 3-22*a*, what is the load current?

3-6 In Fig. 3-22*b*, calculate the load current, load voltage, load power, diode power, and total power.

3-7 If the resistor is doubled in Fig. 3-22*b*, what is the load current?

3-8 If the diode polarity is reversed in Fig. 3-22*b*, what is the diode current? The diode voltage?

Figure 3-22

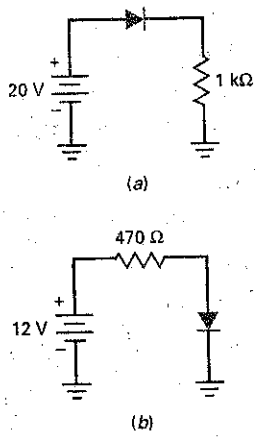

SEC. 3-3 THE SECOND APPROXIMATION

3-9 In Fig. 3-22*a*, calculate the load current, load voltage, load power, diode power, and total power.

3-10 If the resistor is doubled in Fig. 3-22*a*, what is the load current?

3-11 In Fig. 3-22*b*, calculate the load current, load voltage, load power, diode power, and total power.

3-12 If the resistor is doubled in Fig. 3-22*a*, what is the load current?

3-13 If the diode polarity is reversed in Fig. 3-22*b*, what is the diode current? The diode voltage?

SEC. 3-4 THE THIRD APPROXIMATION

3-14 In Fig. 3-22*a*, calculate the load current, load voltage, load power, diode power, and total power. ($R_B = 0.23\ \Omega$)

3-15 If the resistor is doubled in Fig. 3-22*a*, what is the load current? ($R_B = 0.23\ \Omega$)

3-16 In Fig. 3-22*b*, calculate the load current, load voltage, load power, diode power, and total power. ($R_B = 0.23\ \Omega$)

3-17 If the resistor is doubled in Fig. 3-22*b*, what is the load current? ($R_B = 0.23\ \Omega$)

3-18 If the diode polarity is reversed in Fig. 3-22*b*, what is the diode current? The diode voltage?

SEC. 3-5 TROUBLESHOOTING

3-19 Suppose the voltage across the diode of Fig. 3-23*a* is 5 V. Is the diode open or shorted?

Figure 3-23

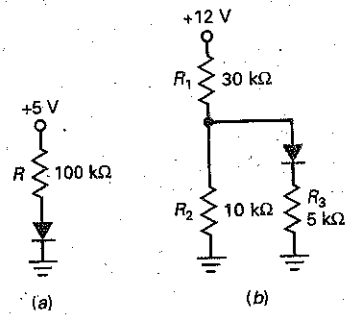

3-20 Something causes R to short in Fig. 3-23*a*. What will the diode voltage be? What will happen to the diode?

3-21 You measure 0 V across the diode of Fig. 3-23*a*. Next you check the source voltage and it reads +5 V with respect to ground. What is wrong with the circuit?

3-22 In Fig. 3-23*b*, you measure a potential of +3 V at the junction of R_1 and R_2. (Remember, potentials are always with respect to ground.) Next you measure 0 V at the junction of the diode and the 5-kΩ resistor. Name some possible troubles.

3-23 The forward and reverse DMM diode test reading is 0.7 V and 1.8 V. Is this diode good?

SEC. 3-7 READING A DATA SHEET

3-24 Which diode would you select in the 1N4000 series if it has to withstand a peak repetitive reverse voltage of 300 V?

3-25 The data sheet shows a band on one end of the diode. What is the name of this band? Does the diode arrow of the schematic symbol point toward or away from this band?

3-26 Boiling water has a temperature of 100°C. If you drop a 1N4001 into a pot of boiling water, will it be destroyed or not? Explain your answer.

Critical Thinking

3-27 Here are some diodes and their worst-case specifications:

Diode	I_F	I_R
1N914	10 mA at 1 V	25 nA at 20 V
1N4001	1 A at 1.1 V	10 μA at 50 V
1N1185	10 A at 0.95 V	4.6 mA at 100 V

Calculate the forward and the reverse resistance for each of these diodes.

3-28 In Fig. 3-23*a*, what value should R be to get a diode current of approximately 20 mA?

3-29 What value should R_2 be in Fig. 3-23*b* to set up a diode current of 0.25 mA?

3-30 A silicon diode has a forward current of 500 mA at 1 V. Use the third approximation to calculate its bulk resistance.

3-31 Given a silicon diode with a reverse current of 5 μa at 25°C and 100 μA at 100°C, calculate the surface leakage current.

3-32 The power is turned off and the upper end of R_1 is grounded in Fig. 3-23*b*. Now you use an ohmmeter to read the forward and reverse resistance of the diode. Both readings are identical. What does the ohmmeter read?

3-33 Some systems, like burglar alarms and computers, use battery backup just in case the main source of power should fail. Describe how the circuit of Fig. 3-24 works.

Figure 3-24

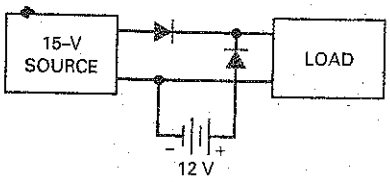

Up-Down Circuit Analysis

Use Fig. 3-25 for the remaining problems. Assume increases of approximately 10 percent in the independent variable and use the second approximation of a diode.

For each independent variable increase, determine what the respective dependent variable will do. Will it go up (U), down (D), or show no change (N)? Refer to Sec. 3-6, Up-Down Circuit Analysis, to review this procedure.

3-34 Predict the response of each dependent variable in the row labeled V_S. Check your answers. Then, answer the

Figure 3-25 Up-down circuit analysis.

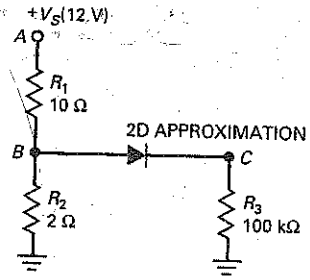

Independent Variables	DEPENDENT VARIABLES								
	V_A	V_B	V_C	I_1	I_2	I_3	P_1	P_2	P_3
V_S									
R_1									
R_2									
R_3									
V_K									

following questions as simply and directly as possible. What effect does an increase in source voltage have on the dependent variables of the circuit?

3-35 Predict the response of each dependent variable in the row labeled R_1. Check your answers. Then summarize your findings in one or two sentences.

3-36 Predict the response of each dependent variable in the row labeled R_2. Check your answers. List the dependent variables that decrease. Explain why these variables decrease, using Ohm's law or similar basic ideas.

3-37 Predict the response of each dependent variable in the row labeled R_3. List the dependent variables that show no change. Explain why these variables show no change.

3-38 Predict the response of each dependent variable in the row labeled V_K. List the dependent variables that decrease. Explain why these variables decrease.

Job Interview Questions

For the following questions, whenever possible draw circuits, graphs, or any figures that will help illustrate your answers. If you can combine words and pictures in your explanations, you are more likely to understand what you are talking about. Also, if you have privacy, pretend that you are at an interview and speak out loud. This practice will make it easier later, when the interview actually takes place.

1. Have you ever heard of an ideal diode? If so, tell me what it is and when you would use it.
2. One of the approximations for a diode is the second approximation. Tell me what the equivalent circuit is and when a silicon diode conducts.
3. Draw the diode curve and explain the different parts of it.
4. A circuit on my lab bench keeps destroying a diode every time I connect a new one. If I have a data sheet for the diode, what are some of the quantities I need to check?
5. In the most basic terms, describe what a diode acts like when it is forward biased and when it is reverse biased.
6. What is the difference between the typical knee voltage of a germanium diode and a silicon diode?
7. What would be a good technique for a technician to use to determine the current through a diode without breaking the circuit?
8. If you suspect that there is a defective diode on a circuit board, what steps would you take to determine whether it is actually defective?
9. For a diode to be useful, how much larger should the reverse resistance be than the forward resistance?
10. How might you connect a diode to prevent a second battery from discharging in a recreational vehicle, and yet still allow it to charge from the alternator?
11. What instruments can you use to test a diode in or out of a circuit?
12. Describe the operation of a diode in detail. Include majority and minority carriers in your discussion.

Self-Test Answers

1.	b	**9.**	a	**17.**	b
2.	b	**10.**	a	**18.**	b
3.	c	**11.**	b	**19.**	a
4.	d	**12.**	b	**20.**	b
5.	a	**13.**	a	**21.**	a
6.	b	**14.**	d	**22.**	c
7.	c	**15.**	a		
8.	c	**16.**	c		

Practice Problem Answers

3-1 D_1 is reverse biased; D_2 is forward biased

3-2 $P_D = 2.2$ W

3-3 $I_L = 5$ mA

3-4 $V_L = 2$ V;
$I_L = 2$ mA

3-5 $V_L = 4.3$ V;
$I_L = 4.3$ mA;
$P_D = 3.01$ mW

3-6 $I_L = 1.77$ mA;
$V_L = 1.77$ V;
$P_D = 1.24$ mW

3-8 $R_T = 10.23\ \Omega$;
$I_L = 420$ mA;
$V_L = 4.2$ V;
$P_D = 335$ mW

chapter 4

Diode Circuits

- Most electronic systems, like HDTVs, DVD/CD players, and computers, need a dc voltage to work properly. Since the power-line voltage is alternating, the first thing we need to do is to convert the ac line voltage to dc voltage. The section of the electronic system that produces this dc voltage is called the power supply. Within the power supply are circuits that allow current to flow in only one direction. These circuits are called **rectifiers.** This chapter discusses rectifier circuits, filters, clippers, clampers, and voltage multipliers.

Objectives

After studying this chapter, you should be able to:

- Draw a diagram of a half-wave rectifier and explain how it works.
- Describe the role of the input transformer in power supplies.
- Draw a diagram of a full-wave rectifier and explain how it works.
- Draw a diagram of a bridge rectifier and explain how it works.
- Analyze a capacitor input filter and its surge current.
- List three important specifications found on a rectifier data sheet.
- Explain how a clipper works and draw waveforms.
- Explain how a clamper works and draw waveforms.
- Describe the action of voltage multipliers.

Chapter Outline

4-1 The Half-Wave Rectifier

4-2 The Transformer

4-3 The Full-Wave Rectifier

4-4 The Bridge Rectifier

4-5 The Choke-Input Filter

4-6 The Capacitor-Input Filter

4-7 Peak Inverse Voltage and Surge Current

4-8 Other Power-Supply Topics

4-9 Troubleshooting

4-10 Clippers and Limiters

4-11 Clampers

4-12 Voltage Multipliers

Vocabulary

bridge rectifier
capacitor-input filter
choke-input filter
clamper
clipper
dc value of a signal
filter
full-wave rectifier
half-wave rectifier
IC voltage regulator
integrated circuit
passive filter
peak detector
peak inverse voltage
polarized capacitor
power supply
rectifiers
ripple
surge current
surge resistor
switching regulator
unidirectional load current
voltage multiplier

Figure 4-1 (*a*) Ideal half-wave rectifier; (*b*) on positive half cycle; (*c*) on negative half cycle.

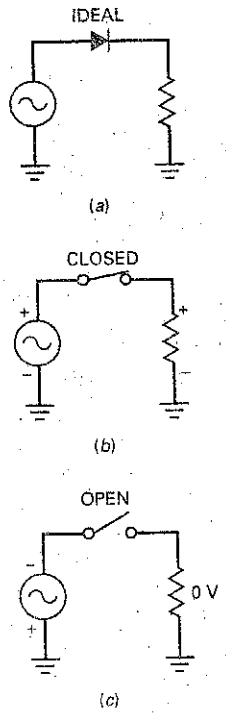

4-1 The Half-Wave Rectifier

Figure 4-1*a* shows a **half-wave rectifier** circuit. The ac source produces a sinusoidal voltage. Assuming an ideal diode, the positive half cycle of source voltage will forward bias the diode. Since the switch is closed, as shown in Fig. 4-1*b*, the positive half cycle of source voltage will appear across the load resistor. On the negative half cycle, the diode is reverse biased. In this case, the ideal diode will appear as an open switch, as shown in Fig. 4-1*c*, and no voltage appears across the load resistor.

Ideal Waveforms

Figure 4-2*a* shows a graphical representation of the input voltage waveform. It is a sine wave with an instantaneous value of v_{in} and a peak value of $V_{p(in)}$. A pure sinusoid like this has an average value of zero over one cycle because each instantaneous voltage has an equal and opposite voltage half a cycle later. If you measure this voltage with a dc voltmeter, you will get a reading of zero because a dc voltmeter indicates the average value.

In the half-wave rectifier of Fig. 4-2*b*, the diode is conducting during the positive half cycles but is nonconducting during the negative half cycles. Because of this, the circuit clips off the negative half cycles, as shown in Fig. 4-2*c*. We call a waveform like this a *half-wave signal.* This half-wave voltage produces a **unidirectional load current.** This means that it flows in only one direction. If the diode were reversed, the output pulses would be negative.

A half-wave signal like the one in Fig. 4-2*c* is a pulsating dc voltage that increases to a maximum, decreases to zero, and then remains at zero during the negative half cycle. This is not the kind of dc voltage we need for electronics equipment. What we need is a constant voltage, the same as you get from a

Figure 4-2 (*a*) Input to half-wave rectifier; (*b*) circuit; (*c*) output of half-wave rectifier.

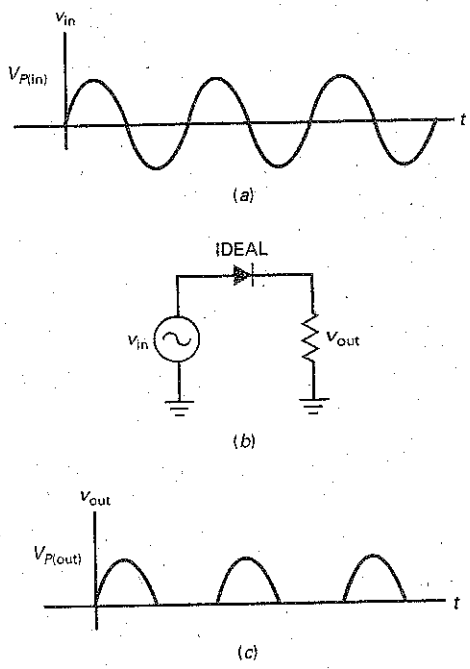

GOOD TO KNOW

The rms value of a half-wave signal can be determined with the following formula:

$$V_{rms} = 1.57V_{avg}$$

where $V_{avg} = V_{dc} = 0.318V_p$. Another formula that works is:

$$V_{rms} = \frac{V_p}{\sqrt{2}}$$

For any waveform, the rms value corresponds to the equivalent dc value that will produce the same heating effect.

battery. To get this kind of voltage, we need to **filter** the half-wave signal (discussed later in this chapter).

When you are troubleshooting, you can use the ideal diode to analyze a half-wave rectifier. It's useful to remember that the peak output voltage equals the peak input voltage:

$$\textbf{Ideal half wave: } V_{p(out)} = V_{p(in)} \tag{4-1}$$

DC Value of Half-Wave Signal

The **dc value of a signal** is the same as the average value. If you measure a signal with a dc voltmeter, the reading will equal the average value. In basic courses the dc value of a half-wave signal is derived. The formula is:

$$\textbf{Half wave: } V_{dc} = \frac{V_p}{\pi} \tag{4-2}$$

The proof of this derivation requires calculus because we have to work out the average value over one cycle.

Since $1/\pi \approx 0.318$, you may see Eq. (4-2) written as:

$$V_{dc} \approx 0.318V_p$$

When the equation is written in this form, you can see that the dc or average value equals 31.8 percent of the peak value. For instance, if the peak voltage of the half-wave signal is 100 V, the dc voltage or average value is 31.8 V.

Output Frequency

The output frequency is the same as the input frequency. This makes sense when you compare Fig. 4-2*c* with Fig. 4-2*a*. Each cycle of input voltage produces one cycle of output voltage. Therefore, we can write:

$$\textbf{Half wave: } f_{out} = f_{in} \tag{4-3}$$

We will use this derivation later with filters.

Second Approximation

We don't get a perfect half-wave voltage across the load resistor. Because of the barrier potential, the diode does not turn on until the ac source voltage reaches approximately 0.7 V. When the peak source voltage is much greater than 0.7 V, the load voltage will resemble a half-wave signal. For instance, if the peak source voltage is 100 V, the load voltage will be very close to a perfect half-wave voltage. If the peak source voltage is only 5 V, the load voltage will have a peak of only 4.3 V. When you need to get a better answer, use this derivation:

$$\textbf{2d half wave: } V_{p(out)} = V_{p(in)} - 0.7\text{ V} \tag{4-4}$$

Higher Approximations

Most designers will make sure that the bulk resistance is much smaller than the Thevenin resistance facing the diode. Because of this, we can ignore bulk resistance in almost every case. If you must have better accuracy than you can get with the second approximation, you should use a computer and a circuit simulator like MultiSim.

Example 4–1

Figure 4-3 shows a half-wave rectifier that you can build on the lab bench or on a computer screen with MultiSim. An oscilloscope is across the 1 kΩ. This will show us the half-wave load voltage. Also, a multimeter is across the 1 kΩ to read the dc load voltage. Calculate the theoretical values of peak load voltage and the dc load voltage. Then, compare these values to the readings on the oscilloscope and the multimeter.

SOLUTION Figure 4-3 shows an ac source of 10 V and 60 Hz. Schematic diagrams usually show ac source voltages as effective or rms values. Recall that the *effective value* is the value of a dc voltage that produces the same heating effect as the ac voltage.

Figure 4–3 Lab example of half-wave rectifier.

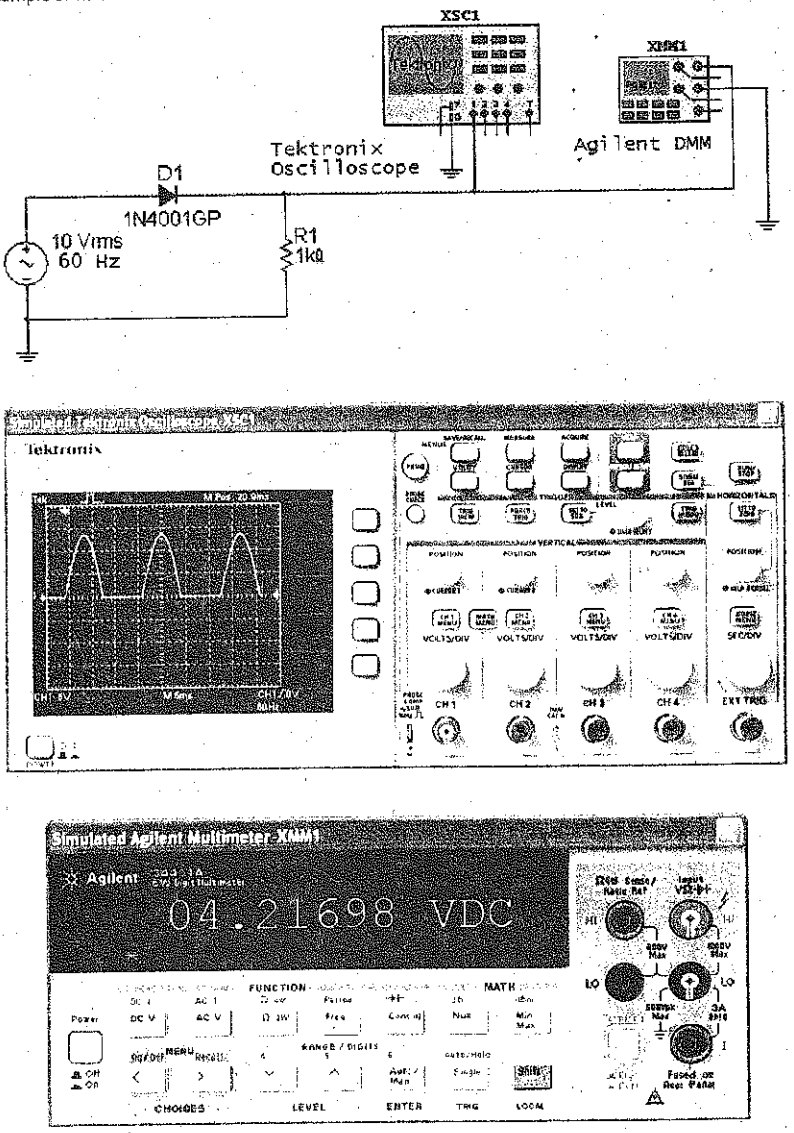

Since the source voltage is 10 V rms, the first thing to do is calculate the peak value of the ac source. You know from earlier courses that the rms value of a sine wave equals:

$$V_{rms} = 0.707V_p$$

Therefore, the peak source voltage in Fig. 4-3 is:

$$V_p = \frac{V_{rms}}{0.707} = \frac{10\text{ V}}{0.707} = 14.1\text{ V}$$

With an ideal diode, the peak load voltage is:

$$V_{p(out)} = V_{p(in)} = 14.1\text{ V}$$

The dc load voltage is:

$$V_{dc} = \frac{V_p}{\pi} = \frac{14.1\text{ V}}{\pi} = 4.49\text{ V}$$

With the second approximation, we get a peak load voltage of:

$$V_{p(out)} = V_{p(in)} - 0.7\text{ V} = 14.1\text{ V} - 0.7\text{ V} = 13.4\text{ V}$$

and a dc load voltage of:

$$V_{dc} = \frac{V_p}{\pi} = \frac{13.4\text{ V}}{\pi} = 4.27\text{ V}$$

Figure 4-3 shows you the values that an oscilloscope and a multimeter will read. Channel 1 of the oscilloscope is set at 5 V per major division (5 V/Div). The half-wave signal has a peak value between 13 and 14 V, which agrees with the result from our second approximation. The multimeter also gives good agreement with theoretical values, because it reads approximately 4.22 V.

PRACTICE PROBLEM 4-1 Using Fig. 4-3, change the ac source voltage to 15 V. Calculate the second approximation dc load voltage V_{dc}.

4-2 The Transformer

Power companies in the United States supply a nominal line voltage of 120 V rms and a frequency of 60 Hz. The actual voltage coming out of a power outlet may vary from 105 to 125 V rms, depending on the time of day, the locality, and other factors. Line voltage is too high for most of the circuits used in electronics equipment. This is why a transformer is commonly used in the power-supply section of almost all electronics equipment. The transformer steps the line voltage down to safer and lower levels that are more suitable for use with diodes, transistors, and other semiconductor devices.

Basic Idea

Earlier courses discussed the transformer in detail. All we need in this chapter is a brief review. Figure 4-4 shows a transformer. Here you see line voltage applied to the primary winding of a transformer. Usually, the power plug has a third prong to ground the equipment. Because of the turns ratio N_1/N_2, the secondary voltage is stepped down when N_1 is greater than N_2.

Phasing Dots

Recall the meaning of the phasing dots shown at the upper ends of the windings. Dotted ends have the same instantaneous phase. In other words, when a positive half cycle appears across the primary, a positive half cycle appears across the

Figure 4-4 Half-wave rectifier with transformer.

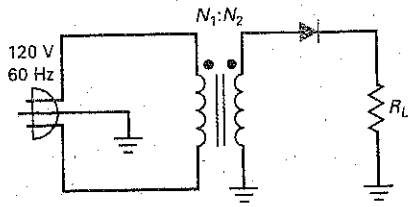

secondary. If the secondary dot were on the ground end, the secondary voltage would be 180° out of phase with the primary voltage.

On the positive half cycle of primary voltage, the secondary winding has a positive half sine wave across it and the diode is forward biased. On the negative half cycle of primary voltage, the secondary winding has a negative half cycle and the diode is reverse-biased. Assuming an ideal diode, we will get a half-wave load voltage.

Turns Ratio

Recall from your earlier course work the following derivation:

$$V_2 = \frac{V_1}{N_1/N_2} \tag{4-5}$$

This says that the secondary voltage equals the primary voltage divided by the turns ratio. Sometimes you will see this equivalent form:

$$V_2 = \frac{N_2}{N_1} V_1$$

This says that the secondary voltage equals the inverse turns ratio times the primary voltage.

You can use either formula for rms, peak values, and instantaneous voltages. Most of the time, we will use Eq. (4-5) with rms values because ac source voltages are almost always specified as rms values.

The terms *step up* and *step down* are also encountered when dealing with transformers. These terms always relate the secondary voltage to the primary voltage. This means that a step-up transformer will produce a secondary voltage that is larger than the primary, and a step-down transformer will produce a secondary voltage that is smaller than the primary.

Example 4-2

What are the peak load voltage and dc load voltage in Fig. 4-5?

Figure 4-5

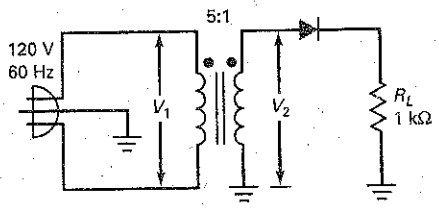

SOLUTION The transformer has a turns ratio of 5:1. This means that the rms secondary voltage is one-fifth of the primary voltage:

$$V_2 = \frac{120\text{ V}}{5} = 24\text{ V}$$

and the peak secondary voltage is:

$$V_p = \frac{24\text{ V}}{0.707} = 34\text{ V}$$

With an ideal diode, the peak load voltage is:

$$V_{p(\text{out})} = 34\text{ V}$$

The dc load voltage is:

$$V_{\text{dc}} = \frac{V_p}{\pi} = \frac{34\text{ V}}{\pi} = 10.8\text{ V}$$

With the second approximation, the peak load voltage is:

$$V_{p(\text{out})} = 34\text{ V} - 0.7\text{ V} = 33.3\text{ V}$$

and the dc load voltage is:

$$V_{\text{dc}} = \frac{V_p}{\pi} = \frac{33.3\text{ V}}{\pi} = 10.6\text{ V}$$

PRACTICE PROBLEM 4-2 Using Fig. 4-5, change the transformer's turns ratio to 2:1 and solve for the ideal dc load voltage.

4-3 The Full-Wave Rectifier

Figure 4-6*a* shows a **full-wave rectifier** circuit. Notice the grounded center tap on the secondary winding. The full-wave rectifier is equivalent to two half-wave rectifiers. Because of the center tap, each of these rectifiers has an input voltage equal to half the secondary voltage. Diode D_1 conducts on the positive half cycle, and diode D_2 conducts on the negative half cycle. As a result, the rectified load current flows during both half cycles. The full-wave rectifier acts the same as two back-to-back half-wave rectifiers.

Figure 4-6*b* shows the equivalent circuit for the positive half cycle. As you see, D_1 is forward biased. This produces a positive load voltage as indicated by the plus-mi[illegible]larity across the load resistor. Figure 4-6*c* shows the equivalent circu[illegible] for the [illegible]ative half cycle. This time, D_2 is forward biased. As you can see, this [illegible] produ[illegible] a positive load voltage.

[illegible] half cycles, the load voltage has the same polarity and the load current is in the same direction. The circuit is called a *full-wave rectifier* because it has changed the ac input voltage to the pulsating dc output voltage shown in Fig. 4-6*d*. This waveform has some interesting properties that we will now discuss.

Figure 4-6 (*a*) Full-wave rectifier; (*b*) equivalent circuit for positive half cycle; (*c*) equivalent circuit for negative half cycle; (*d*) full-wave output.

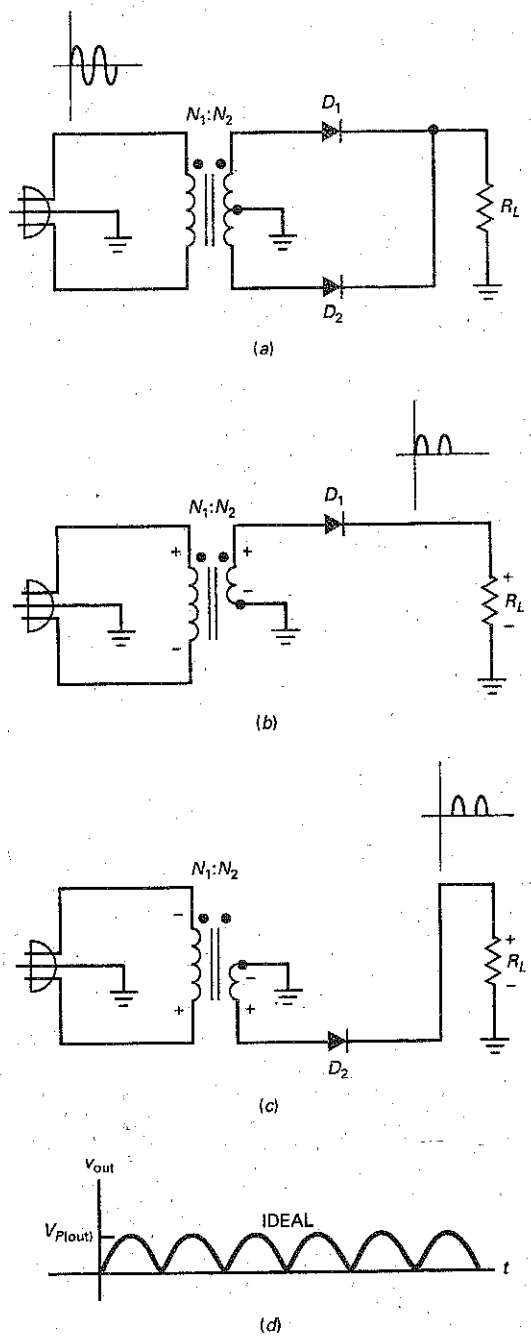

GOOD TO KNOW

The rms value of a full-wave signal is $V_{rms} = 0.707V_p$, which is the same as V_{rms} for a full sine wave.

DC or Average Value

Since the full-wave signal has twice as many positive cycles as the half-wave signal, the dc or average value is twice as much, given by:

$$\textbf{Full wave: } V_{dc} = \frac{2V_p}{\pi} \tag{4-6}$$

Since $2/\pi = 0.636$, you may see Eq. (4-6) written as:

$$V_{dc} \approx 0.636V_p$$

In this form, you can see that the dc or average value equals 63.6 percent of the peak value. For instance, if the peak voltage of the full-wave signal is 100 V, the dc voltage or average value is 63.6 V.

Output Frequency

With a half-wave rectifier, the output frequency equals the input frequency. But with a full-wave rectifier, something unusual happens to the output frequency. The ac line voltage has a frequency of 60 Hz. Therefore, the input period equals:

$$T_{in} = \frac{1}{f} = \frac{1}{60 \text{ Hz}} = 16.7 \text{ ms}$$

Because of the full-wave rectification, the period of the full-wave signal is half the input period:

$$T_{out} = 0.5(16.7 \text{ ms}) = 8.33 \text{ ms}$$

(If there is any doubt in your mind, compare Fig. 4-6*d* to Fig. 4-2*c*.) When we calculate the output frequency, we get:

$$f_{out} = \frac{1}{T_{out}} = \frac{1}{8.33 \text{ ms}} = 120 \text{ Hz}$$

The frequency of the full-wave signal is double the input frequency. This makes sense. A full-wave output has twice as many cycles as the sine-wave input has. The full-wave rectifier inverts each negative half cycle, so that we get double the number of positive half cycles. The effect is to double the frequency. As a derivation:

$$\textbf{Full wave: } f_{out} = 2f_{in} \tag{4-7}$$

Second Approximation

Since the full-wave rectifier is like two back-to-back half-wave rectifiers, we can use the second approximation given earlier. The idea is to subtract 0.7 V from the ideal peak output voltage. The following example will illustrate the idea.

Example 4–3

MultiSim

Figure 4-7 shows a full-wave rectifier that you can build on lab bench or on a computer screen with MultiSim. Channel 1 of the oscilloscope displays the primary voltage (the sine wave), and channel 2 displays the load voltage (the full-wave signal). Calculate the peak input and output voltages. Then compare the theoretical values to the measured values.

SOLUTION

The peak primary voltage is:

$$V_{p(1)} = \frac{V_{rms}}{0.707} = \frac{120 \text{ V}}{0.707} = 170 \text{ V}$$

Figure 4–7 Lab example of full-wave rectifier.

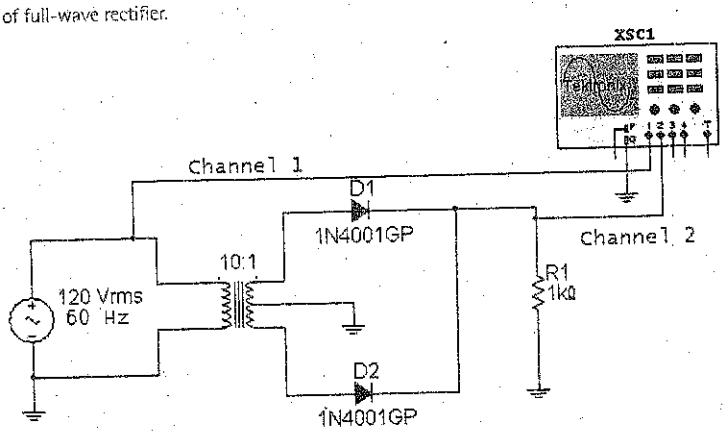

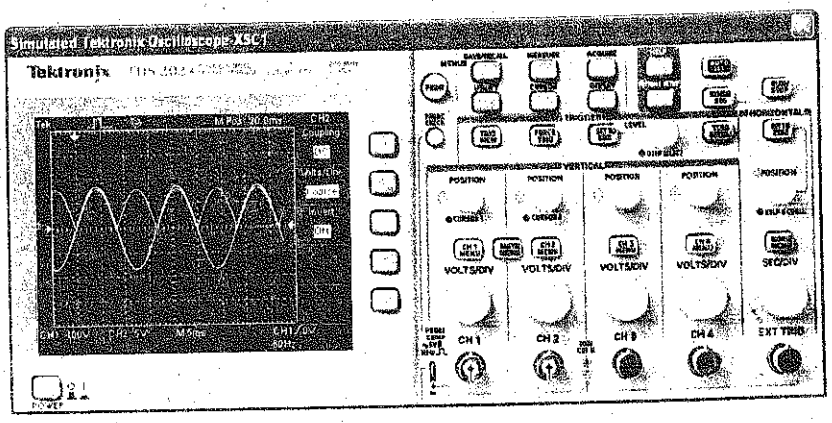

Because of the 10 : 1 step-down transformer, the peak secondary voltage is:

$$V_{p(2)} = \frac{V_{p(1)}}{N_1/N_2} = \frac{170\text{ V}}{10} = 17\text{ V}$$

The full-wave rectifier acts like two back-to-back half-wave rectifiers. Because of the center tap, the input voltage to each half-wave rectifier is only half the secondary voltage:

$$V_{p(\text{in})} = 0.5(17\text{ V}) = 8.5\text{ V}$$

Ideally, the output voltage is:

$$V_{p(\text{out})} = 8.5\text{ V}$$

Using the second approximation:

$$V_{p(\text{out})} = 8.5\text{ V} - 0.7\text{ V} = 7.8\text{ V}$$

Now, let's compare the theoretical values with the measured values. The sensitivity of channel 1 is 100 V/Div. Since the sine-wave input reads approximately 1.7 divisions, its peak value is approximately 170 V. Channel 2 has a

sensitivity of 5 V/Div. Since the full-wave output reads approximately 1.4 Div, its peak value is approximately 7 V. Both input and output readings are in reasonable agreement with theoretical values.

Once again, notice that the second approximation improves the answer only slightly. If you were troubleshooting, the improvement would not be of much value. If something was wrong with the circuit, the chances are that the full-wave output would be drastically different from the ideal value of 8.5 V.

PRACTICE PROBLEM 4-3 Using Fig. 4-7, change the transformer's turns ratio to 5:1 and calculate the V_p (in) and V_p (out) second approximation values.

Example 4-4

MultiSim

If one of the diodes in Fig. 4-7 were open, what would happen to the different voltages?

SOLUTION If one of the diodes is open, the circuit reverts to a half-wave rectifier. In this case, half the secondary voltage is still 8.5 V, but the load voltage will be a half-wave signal rather than a full-wave signal. This half-wave voltage will still have a peak of 8.5 V (ideally) or 7.8 V (second approximation).

4-4 The Bridge Rectifier

Figure 4-8*a* shows a **bridge rectifier** circuit. The bridge rectifier is similar to a full-wave rectifier because it produces a full-wave output voltage. Diodes D_1 and D_2 conduct on the positive half cycle, and D_3 and D_4 conduct on the negative half cycle. As a result, the rectified load current flows during both half cycles.

Figure 4-8*b* shows the equivalent circuit for the positive half cycle. As you can see, D_1 and D_2 are forward biased. This produces a positive load voltage as indicated by the plus-minus polarity across the load resistor. As a memory aid, visualize D_2 shorted. Then, the circuit that remains is a half-wave rectifier, which we are already familiar with.

Figure 4-8*c* shows the equivalent circuit for the negative half cycle. This time, D_3 and D_4 are forward biased. This also produces a positive load voltage. If you visualize D_3 shorted, the circuit looks like a half-wave rectifier. So the bridge rectifier acts like two back-to-back half-wave rectifiers.

During both half cycles, the load voltage has the same polarity and the load current is in the same direction. The circuit has changed the ac input voltage to the pulsating dc output voltage shown in Fig. 4-8*d*. Note the advantage of this type of full-wave rectification over the center-tapped version in the previous section: *The entire secondary voltage can be used.*

Fig. 4-8*e* shows bridge rectifier packages that contain all four diodes.

Average Value and Output Frequency

Because a bridge rectifier produces a full-wave output, the equations for average value and output frequency are the same as given for a full-wave rectifier:

$$V_{dc} = \frac{2V_p}{\pi}$$

GOOD TO KNOW

When a bridge rectifier, as opposed to a two-diode full-wave rectifier, is used, the same dc output voltage can be obtained with a transformer having a higher turns ratio N_1/N_2. This means that with a bridge rectifier, fewer turns of wire are needed in the transformer. Therefore, the transformer used with a bridge rectifier versus a two-diode full-wave rectifier will be small and lighter and will cost less. This benefit alone outweighs using four diodes instead of two in a conventional two-diode full-wave rectifier.

Figure 4–8 (*a*) Bridge rectifier; (*b*) equivalent circuit for positive half cycle; (*c*) equivalent circuit for negative half cycle; (*d*) full-wave output; (*e*) bridge rectifier packages.

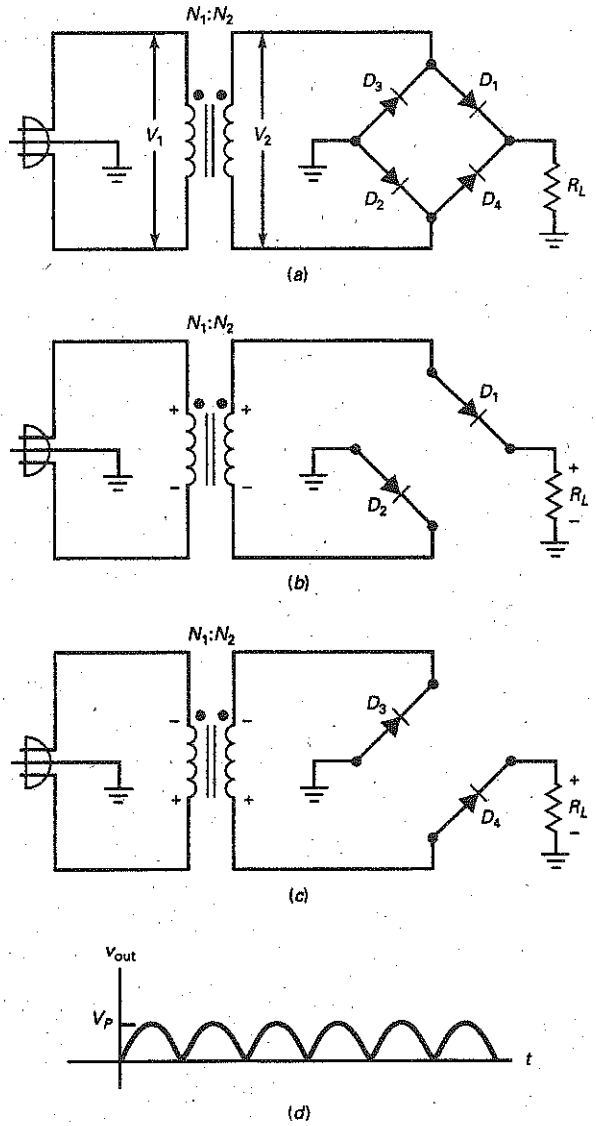

and

$$f_{out} = 2f_{in}$$

The average value is 63.6 percent of the peak value, and the output frequency is 120 Hz, given a line frequency of 60 Hz.

One advantage of a bridge rectifier is that all the secondary voltage is used as the input to the rectifier. Given the same transformer, we get twice as much peak voltage and twice as much dc voltage with a bridge rectifier as with a full-wave rectifier. Doubling the dc output voltage compensates for having to use two extra diodes. As a rule, you will see *the bridge rectifier used a lot more than the full-wave rectifier.*

Figure 4-8 (continued)

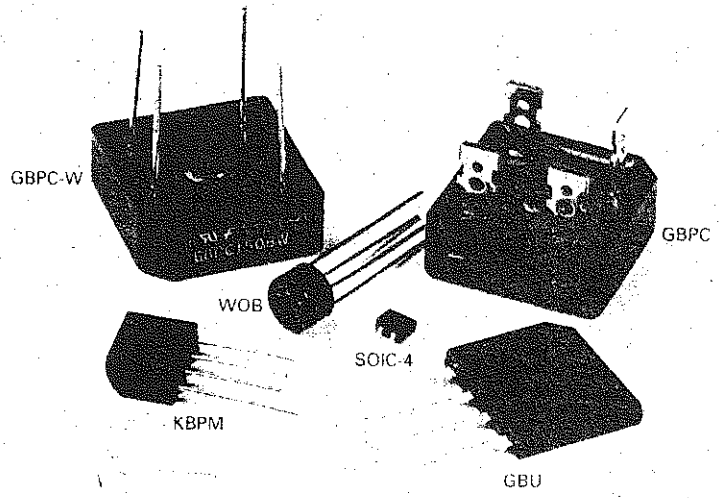

(*e*)

© Brian Moeskau/Brian Moeskau Photography

Incidentally, the full-wave rectifier was in use for many years before the bridge rectifier was used. For this reason, it has retained the name *full-wave rectifier* even though a bridge rectifier also has a full-wave output. To distinguish the full-wave rectifier from the bridge rectifier, some literature may refer to a full-wave rectifier as a *conventional full-wave rectifier,* a *two-diode full-wave rectifier,* or a *center-tapped full-wave rectifier.*

Second Approximation and Other Losses

Since the bridge rectifier has two diodes in the conducting path, the peak output voltage is given by:

$$\textbf{2d bridge: } V_{p(out)} = V_{p(in)} - 1.4\text{ V} \tag{4-8}$$

As you can see, we have to subtract two diode drops from the peak to get a more accurate value of peak load voltage. Summary Table 4-1 compares the three rectifiers and their properties.

Summary Table 4-1 Unfiltered Rectifiers*

	Half-wave	Full-wave	Bridge
Number of diodes	1	2	4
Rectifier input	$V_{p(2)}$	$0.5V_{p(2)}$	$V_{p(2)}$
Peak output (ideal)	$V_{p(2)}$	$0.5V_{p(2)}$	$V_{p(2)}$
Peak output (2d)	$V_{p(2)} - 0.7$ V	$0.5V_{p(2)} - 0.7$ V	$V_{p(2)} - 1.4$ V
DC output	$V_{p(out)}/\pi$	$2V_{p(out)}/\pi$	$2V_{p(out)}/\pi$
Ripple frequency	f_{in}	$2f_{in}$	$2f_{in}$

*$V_{p(2)}$ = peak secondary voltage; $V_{p(out)}$ = peak output voltage.

Example 4–5

MultiSim

Calculate the peak input and output voltages in Fig. 4-9. Then, compare the theoretical values to the measured values.

Notice the circuit uses a bridge rectifier package.

SOLUTION The peak primary and secondary voltages are the same as in Example 4-3:

$$V_{p(1)} = 170 \text{ V}$$
$$V_{p(2)} = 17 \text{ V}$$

With a bridge rectifier, all of the secondary voltage is used as the input to the rectifier. Ideally, the peak output voltage is:

$$V_{p(\text{out})} = 17 \text{ V}$$

Figure 4–9 Lab example of bridge rectifier.

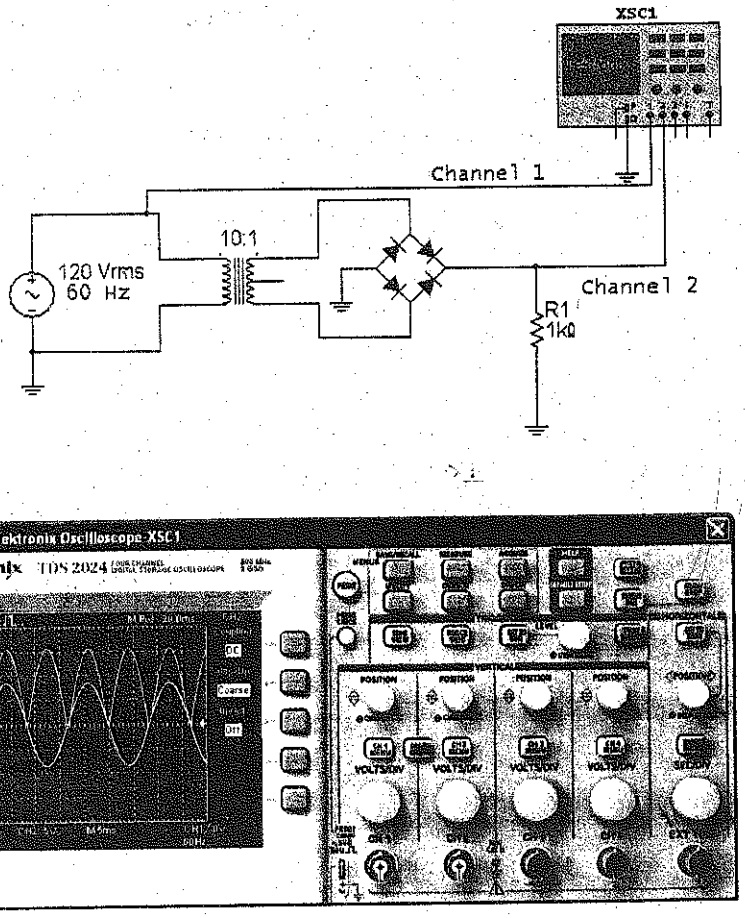

To a second approximation:

$$V_{p(out)} = 17\text{ V} - 1.4\text{ V} = 15.6\text{ V}$$

Now, let's compare the theoretical values with the measured values. The sensitivity of channel 1 is 100 V/Div. Since the sine-wave input reads approximately 1.7 Div, its peak value is approximately 170 V. Channel 2 has a sensitivity of 5 V/Div. Since the half-wave output reads approximately 3.2 Div, its peak value is approximately 16 V. Both input and output readings are approximately the same as the theoretical values.

PRACTICE PROBLEM 4-5 As in Example 4-5, calculate the ideal and second approximation V_p(out) values using a 5:1 transformer turns ratio.

4-5 The Choke-Input Filter

At one time, the choke-input filter was widely used to filter the output of a rectifier. Although not used much anymore because of its cost, bulk, and weight, this type of filter has instructional value and helps make it easier to understand other filters.

Basic Idea

Look at Fig. 4-10*a*. This type of filter is called a **choke-input filter.** The ac source produces a current in the inductor, capacitor, and resistor. The ac current in each component depends on the inductive reactance, capacitive reactance, and the resistance. The inductor has a reactance given by:

$$X_L = 2\pi fL$$

The capacitor has a reactance given by:

$$X_C = \frac{1}{2\pi fC}$$

As you learned in previous courses, the choke (or inductor) has the primary characteristic of opposing a change in current. Because of this, a choke-input filter ideally reduces the ac current in the load resistor to zero. To a second approximation, it reduces the ac load current to a very small value. Let us find out why.

The first requirement of a well-designed choke-input filter is to have X_C at the input frequency be much smaller than R_L. When this condition is satisfied, we can ignore the load resistance and use the equivalent circuit of Fig. 4-10*b*. The second requirement of a well-designed choke-input filter is to have X_L be much greater than X_C at the input frequency. When this condition is satisfied, the ac

Figure 4-10 (*a*) Choke-input filter; (*b*) ac equivalent circuit.

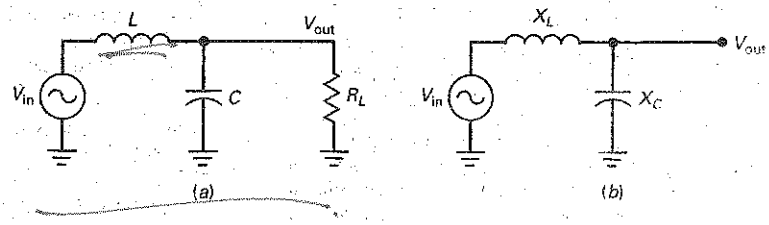

output voltage approaches zero. On the other hand, since the choke approximates a short circuit at 0 Hz and the capacitor approximates an open at 0 Hz, the dc current can be passed to the load resistance with minimum loss.

In Fig. 4-10*b*, the circuit acts like a reactive voltage divider. When X_L is much greater than X_C, almost all the ac voltage is dropped across the choke. In this case, the ac output voltage equals:

$$V_{out} \approx \frac{X_C}{X_L} V_{in} \tag{4-9}$$

For instance, if $X_L = 10\ k\Omega$, $X_C = 100\ \Omega$, and $V_{in} = 15$ V, the ac output voltage is:

$$V_{out} \approx \frac{100\ \Omega}{10\ k\Omega} 15\ V = 0.15\ V$$

In this example, the choke-input filter reduces the ac voltage by a factor of 100.

Filtering the Output of a Rectifier

Figure 4-11*a* shows a choke-input filter between a rectifier and a load. The rectifier can be a half-wave, full-wave, or bridge type. What effect does the choke-

Figure 4-11 (*a*) Rectifier with choke-input filter; (*b*) rectifier output has dc and ac components; (*c*) dc equivalent circuit; (*d*) filter output is direct current with small ripple.

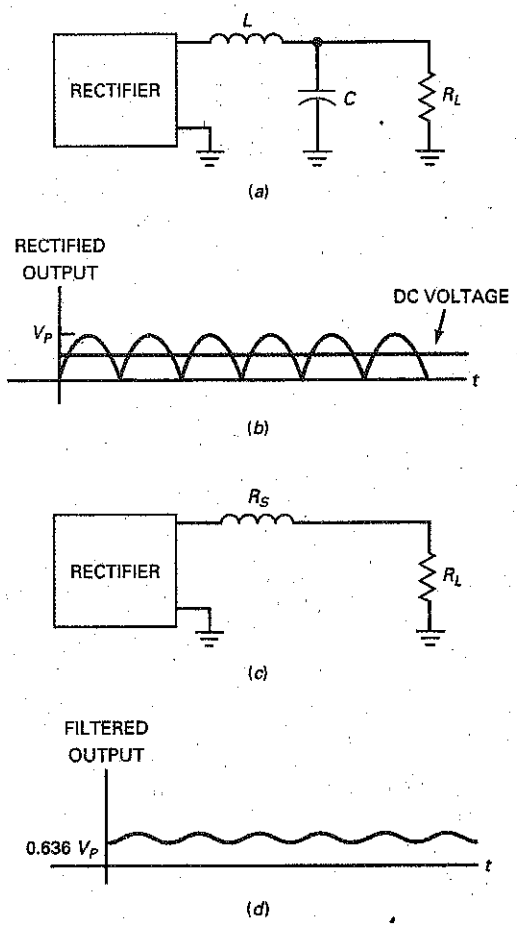

input filter have on the load voltage? The easiest way to solve this problem is to use the superposition theorem. Recall what this theorem says: If you have two or more sources, you can analyze the circuit for each source separately and then add the individual voltages to get the total voltage.

The rectifier output has two different components: a dc voltage (the average value) and an ac voltage (the fluctuating part), as shown in Fig. 4-11*b*. Each of these voltages acts like a separate source. As far as the ac voltage is concerned, X_L is much greater than X_C, and this results in very little ac voltage across the load resistor. Even though the ac component is not a pure sine wave, Eq. (4-9) is still a close approximation for the ac load voltage.

The circuit acts like Fig. 4-11*c* as far as dc voltage is concerned. At 0 Hz, the inductive reactance is zero and the capacitive reactance is infinite. Only the series resistance of the inductor windings remains. Making R_S much smaller than R_L causes most of the dc component to appear across the load resistor.

That's how a choke-input filter works: Almost all of the dc component is passed on to the load resistor, and almost all of the ac component is blocked. In this way, we get an almost perfect dc voltage, one that is almost constant, like the voltage out of a battery. Figure 4-11*d* shows the filtered output for a full-wave signal. The only deviation from a perfect dc voltage is the small ac load voltage shown in Fig. 4-11*d*. This small ac load voltage is called **ripple.** With an oscilloscope, we can measure its peak-to-peak value.

Main Disadvantage

A **power supply** is the circuit inside electronics equipment that converts the ac input voltage to an almost perfect dc output voltage. It includes a rectifier and a filter. The trend nowadays is toward low-voltage, high-current power supplies. Because line frequency is only 60 Hz, large inductances have to be used to get enough reactance for adequate filtering. But large inductors have large winding resistances, which create a serious design problem with large load currents. In other words, too much dc voltage is dropped across the choke resistance. Furthermore, bulky inductors are not suitable for modern semiconductor circuits, where the emphasis is on lightweight designs.

Switching Regulators

One important application does exist for the choke-input filter. A **switching regulator** is a special kind of power supply used in computers, monitors, and an increasing variety of equipment. The frequency used in a switching regulator is much higher than 60 Hz. Typically, the frequency being filtered is above 20 kHz. At this much higher frequency, we can use much smaller inductors to design efficient choke-input filters. We will discuss the details in a later chapter.

4-6 The Capacitor-Input Filter

The choke-input filter produces a dc output voltage equal to the average value of the rectified voltage. The **capacitor-input filter** produces a dc output voltage equal to the peak value of the rectified voltage. This type of filter is the most widely used in power supplies.

Basic Idea

Figure 4-12*a* shows an ac source, a diode, and a capacitor. The key to understanding a capacitor-input filter is understanding what this simple circuit does during the first quarter cycle.

Figure 4-12 (*a*) Unloaded capacitor-input filter; (*b*) output is pure dc voltage; (*c*) capacitor remains charged when diode is off.

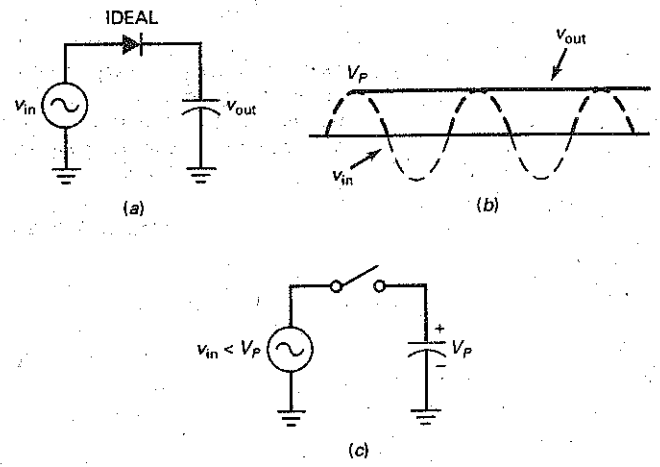

Initially, the capacitor is uncharged. During the first quarter cycle of Fig. 4-12*b*, the diode is forward biased. Since it ideally acts like a closed switch, the capacitor charges, and its voltage equals the source voltage at each instant of the first quarter cycle. The charging continues until the input reaches its maximum value. At this point, the capacitor voltage equals V_p.

After the input voltage reaches the peak, it starts to decrease. As soon as the input voltage is less than V_p, the diode turns off. In this case, it acts like the open switch of Fig. 4-12*c*. During the remaining cycles, the capacitor stays fully charged and the diode remains open. This is why the output voltage of Fig. 4-12*b* is constant and equal to V_p.

Ideally, all that the capacitor-input filter does is charge the capacitor to the peak voltage during the first quarter cycle. This peak voltage is constant, the perfect dc voltage we need for electronics equipment. There's only one problem: There is no load resistor.

Effect of Load Resistor

For the capacitor-input filter to be useful, we need to connect a load resistor across the capacitor, as shown in Fig. 4-13*a*. As long as the R_LC time constant is much greater than the period, the capacitor remains almost fully charged and the load voltage is approximately V_p. The only deviation from a perfect dc voltage is the small ripple seen in Fig. 4-13*b*. The smaller the peak-to-peak value of this ripple, the more closely the output approaches a perfect dc voltage.

Between peaks, the diode is off and the capacitor discharges through the load resistor. In other words, the capacitor supplies the load current. Since the capacitor discharges only slightly between peaks, the peak-to-peak ripple is small. When the next peak arrives, the diode conducts briefly and recharges the capacitor to the peak value. A key question is: What size should the capacitor be for proper operation? Before discussing capacitor size, consider what happens with the other rectifier circuits.

Full-Wave Filtering

If we connect a full-wave or bridge rectifier to a capacitor-input filter, the peak-to-peak ripple is cut in half. Figure 4-13*c* shows why. When a full-wave voltage is

Figure 4-13 (*a*) Loaded capacitor-input filter; (*b*) output is direct current with small ripple; (*c*) full wave output has less ripple.

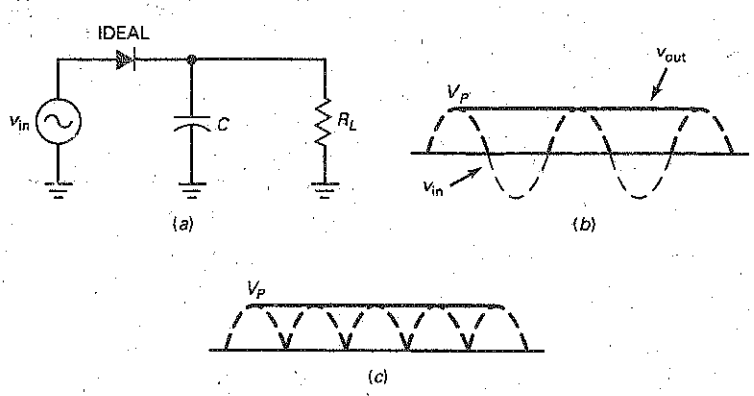

applied to the *RC* circuit, the capacitor discharges for only half as long. Therefore, the peak-to-peak ripple is half the size it would be with a half-wave rectifier.

The Ripple Formula

Here is a derivation we will use to estimate the peak-to-peak ripple out of any capacitor-input filter:

$$V_R = \frac{I}{fC} \tag{4-10}$$

where V_R = peak-to-peak ripple voltage
I = dc load current
f = ripple frequency
C = capacitance

This is an approximation, not an exact derivation. We can use this formula to estimate the peak-to-peak ripple. When a more accurate answer is needed, one solution is to use a computer with a circuit simulator like MultiSim.

For instance, if the dc load current is 10 mA and the capacitance is 200 μF, the ripple with a bridge rectifier and a capacitor-input filter is:

$$V_R = \frac{10 \text{ mA}}{(120 \text{ Hz})(200\ \mu\text{F})} = 0.417 \text{ V pp}$$

In using this derivation, remember two things. First, the ripple is in peak-to-peak (pp) voltage. This is useful because you normally measure ripple voltage with an oscilloscope. Second, the formula works with half-wave or full-wave voltages. Use 60 Hz for half-wave, and 120 Hz for full-wave.

You should use an oscilloscope for ripple measurements if one is available. If not, you can use an ac voltmeter, although there will be a significant error in the measurement. Most ac voltmeters are calibrated to read the rms value of a sine wave. Since the ripple is not a sine wave, you may get a measurement error of as much as 25 percent, depending on the design of the ac voltmeter. But this should be no problem when you are troubleshooting, since you will be looking for much larger changes in ripple.

GOOD TO KNOW

Another, more accurate formula can be used to determine the ripple out of any capacitor input filter. It is

$$V_R = V_{P(out)}(1 - \epsilon^{-t/R_LC})$$

Time t represents the length of time the filter capacitor C is allowed to discharge. For a half-wave rectifier, t can be approximated as 16.67 ms, whereas 8.33 ms can be used for a full-wave rectifier.

If you do use an ac voltmeter to measure the ripple, you can convert the peak-to-peak value given by Eq. (4-10) to an rms value using the following formula for a sine wave:

$$V_{rms} = \frac{V_{pp}}{2\sqrt{2}}$$

Dividing by 2 converts the peak-to-peak value to a peak value, and dividing by $\sqrt{2}$ gives the rms value of a sine wave with the same peak-to-peak value as the ripple voltage.

Exact DC Load Voltage

It is difficult to calculate the exact dc load voltage in a bridge rectifier with a capacitor-input filter. To begin with, we have the two diode drops that are subtracted from the peak voltage. Besides the diode drops, an additional voltage drop occurs, as follows: The diodes conduct heavily when recharging the capacitor because they are on for only a short time during each cycle. This brief but large current has to flow through the transformer windings and the bulk resistance of the diodes. In our examples, we will calculate either the ideal output or the output with the second approximation of a diode, remembering that the actual dc voltage is slightly lower.

Example 4-6

What is the dc load voltage and ripple in Fig. 4-14?

SOLUTION The rms secondary voltage is:

$$V_2 = \frac{120\text{ V}}{5} = 24\text{ V}$$

The peak secondary voltage is:

$$V_p = \frac{24\text{ V}}{0.707} = 34\text{ V}$$

Assuming an ideal diode and small ripple, the dc load voltage is:

$$V_L = 34\text{ V}$$

To calculate the ripple, we first need to get the dc load current:

$$I_L = \frac{V_L}{R_L} = \frac{34\text{ V}}{5\text{ k}\Omega} = 6.8\text{ mA}$$

Figure 4-14 Half-wave rectifier and capacitor-input filter.

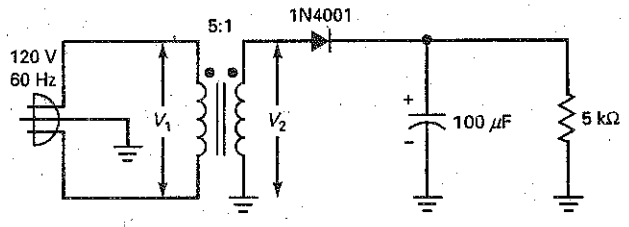

Figure 4-15 Full-wave rectifier and capacitor-input filter.

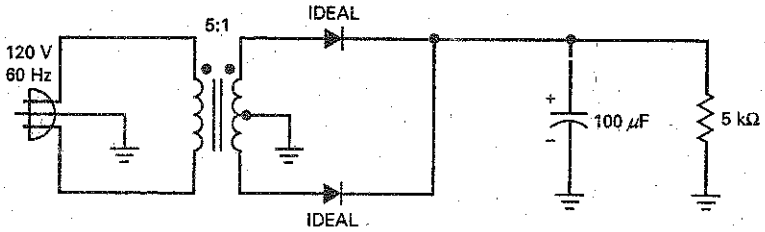

Now we can use Eq. (4-10) to get:

$$V_R = \frac{6.8 \text{ mA}}{(60 \text{ Hz})(100\ \mu\text{F})} = 1.13 \text{ V pp} \approx 1.1 \text{ V pp}$$

We rounded the ripple to two significant digits because it is an approximation and cannot be accurately measured with an oscilloscope with greater precision.

Here is how to improve the answer slightly: There is about 0.7 V across a silicon diode when it is conducting. Therefore, the peak voltage across the load will be closer to 33.3 V than to 34 V. The ripple also lowers the dc voltage slightly. So the actual dc load voltage will be closer to 33 V than to 34 V. But these are minor deviations. Ideal answers are usually adequate for troubleshooting and preliminary analysis.

A final point about the circuit. The plus sign on the filter capacitor indicates a **polarized capacitor,** one whose plus side must be connected to the positive rectifier output. In Fig. 4-15, the plus sign on the capacitor case is correctly connected to the positive output voltage. You must look carefully at the capacitor case when you are building or troubleshooting a circuit to find out whether it is polarized or not.

Power supplies often use polarized electrolytic capacitors because this type can provide high values of capacitance in small packages. As discussed in earlier courses, *electrolytic capacitors must be connected with the correct polarity* to produce the oxide film. If an electrolytic capacitor is connected in opposite polarity, *it becomes hot and may explode.*

Example 4-7

MultiSim

What is the dc load voltage and ripple in Fig. 4-15?

SOLUTION Since the transformer is 5:1 step-down like the preceding example, the peak secondary voltage is still 34 V. Half this voltage is the input to each half-wave section. Assuming an ideal diode and small ripple, the dc load voltage is:

$$V_L = 17 \text{ V}$$

The dc load current is:

$$I_L = \frac{17 \text{ V}}{5 \text{ k}\Omega} = 3.4 \text{ mA}$$

Now, Eq. (4-10) gives:

$$V_R = \frac{3.4 \text{ mA}}{(120 \text{ Hz})(100\ \mu\text{F})} = 0.283 \text{ V pp} \approx 0.28 \text{ V pp}$$

Because of the 0.7 V across the conducting diode, the actual dc load voltage will be closer to 16 V than to 17 V.

PRACTICE PROBLEM 4-7 Using Fig. 4-15, change R_L to 2 KΩ and calculate the new ideal dc load voltage and ripple.

Example 4-8

MultiSim

What is the dc load voltage and ripple in Fig. 4-16? Compare the answers with those in the two preceding examples.

SOLUTION Since the transformer is 5 : 1 step-down as in the preceding example, the peak secondary voltage is still 34 V. Assuming an ideal diode and small ripple, the dc load voltage is:

$$V_L = 34 \text{ V}$$

The dc load current is:

$$I_L = \frac{34 \text{ V}}{5 \text{ k}\Omega} = 6.8 \text{ mA}$$

Now, Eq. (4-10) gives:

$$V_R = \frac{6.8 \text{ mA}}{(120 \text{ Hz})(100\ \mu\text{F})} = 0.566 \text{ V pp} \approx 0.57 \text{ V pp}$$

Because of the 1.4 V across two conducting diodes and the ripple, the actual dc load voltage will be closer to 32 V than to 34 V.

We have calculated the dc load voltage and ripple for the three different rectifiers. Here are the results:

Half wave: 34 V and 1.13 V

Full wave: 17 V and 0.288 V

Bridge: 34 V and 0.566 V

For a given transformer, the bridge rectifier is better than the half-wave rectifier because it has less ripple, and it's better than the full-wave rectifier because it produces twice as much output voltage. Of the three, *the bridge rectifier has emerged as the most popular.*

Figure 4-16 Bridge rectifier and capacitor-input filter.

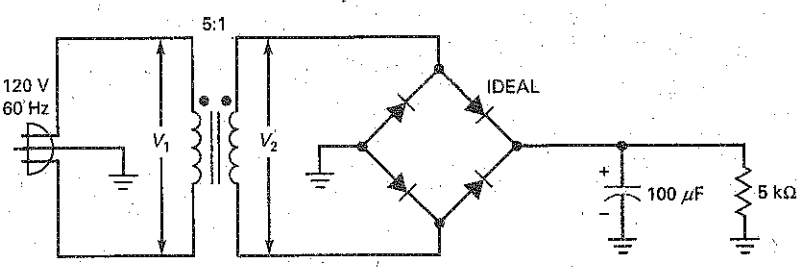

Example 4-9

MultiSim

Figure 4-17 shows the values measured with MultiSim. Calculate the theoretical load voltage and ripple and compare them to the measured values.

Figure 4-17 Lab example of bridge rectifier and capacitor-input filter.

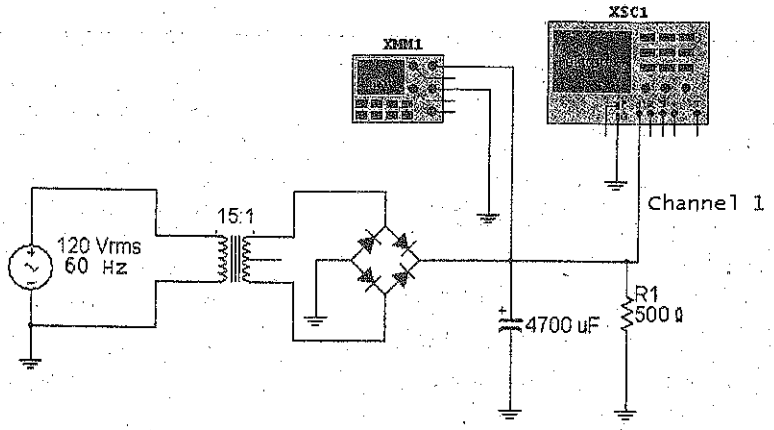

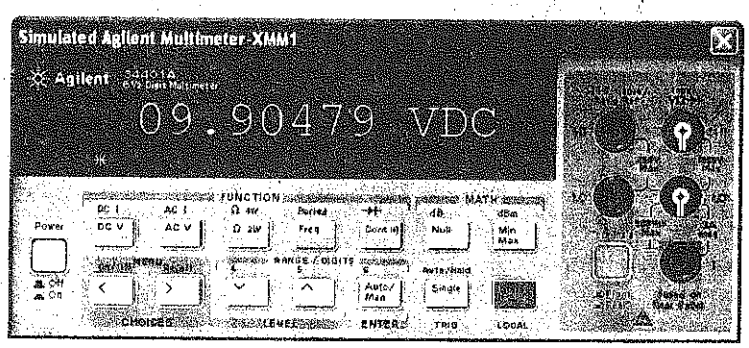

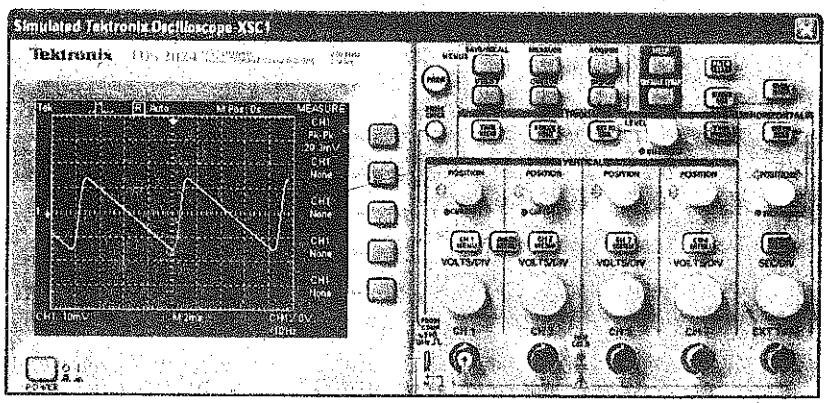

SOLUTION The transformer is a 15 : 1 step-down, so the rms secondary voltage is

$$V_2 = \frac{120\text{ V}}{15} = 8\text{ V}$$

and the peak secondary voltage is:

$$V_p = \frac{8\text{ V}}{0.707} = 11.3\text{ V}$$

Let's use the second approximation of the diodes to get the dc load voltage:

$$V_L = 11.3\text{ V} - 1.4\text{ V} = 9.9\text{ V}$$

To calculate the ripple, we first need to get the dc load current:

$$I_L = \frac{9.9\text{ V}}{500\ \Omega} = 19.8\text{ mA}$$

Now, we can use Eq. (4-10) to get:

$$V_R = \frac{19.8\text{ mA}}{(120\text{ Hz})(4700\ \mu\text{F})} = 35\text{ mV pp}$$

In Fig. 4-17, a multimeter reads a dc load voltage of 9.9 V.

Channel 1 of the oscilloscope is set to 10 mV/Div. The peak-to-peak ripple is approximately 2.9 Div and the measured ripple is 29.3 mV. This is less than the theoretical value of 35 mV, which emphasizes the point made earlier. Equation (4-10) is to be used for *estimating* ripple. If you need more accuracy, use computer simulation software.

PRACTICE PROBLEM 4-9 Change the capacitor value in Fig. 4-17 to 1,000 μF. Calculate the new V_R value.

4-7 Peak Inverse Voltage and Surge Current

The **peak inverse voltage (PIV)** is the maximum voltage across the nonconducting diode of a rectifier. *This voltage must be less than the breakdown voltage of the diode; otherwise, the diode will be destroyed.* The peak inverse voltage depends on the type of rectifier and filter. The worst case occurs with the capacitor-input filter.

As discussed earlier, data sheets from various manufacturers use many different symbols to indicate the maximum reverse voltage rating of a diode. Sometimes, these symbols indicate different conditions of measurement. Some of the data sheet symbols for the maximum reverse voltage rating are PIV, PRV, V_B, V_{BR}, V_R, V_{RRM}, V_{RWM}, and $V_{R(max)}$.

Half-Wave Rectifier with Capacitor-Input Filter

Figure 4-18*a* shows the critical part of a half-wave rectifier. This is the part of the circuit that determines how much reverse voltage is across the diode. The rest of the circuit has no effect and is omitted for the sake of clarity. In the worse case, the peak secondary voltage is on the negative peak and the capacitor is fully charged

Figure 4-18 (*a*) Peak inverse voltage in half-wave rectifier; (*b*) peak inverse voltage in full-wave rectifier; (*c*) peak inverse voltage in bridge-wave rectifier.

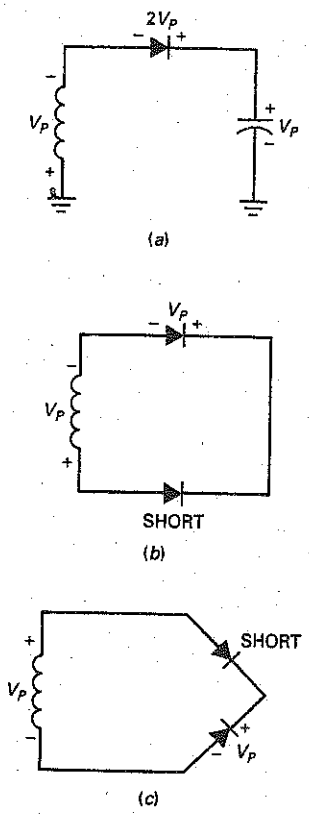

with a voltage of V_p. Apply Kirchhoff's voltage law, and you can see right away that the peak inverse voltage across the nonconducting diode is:

$$\text{PIV} = 2V_p \tag{4-11}$$

For instance, if the peak secondary voltage is 15 V, the peak inverse voltage is 30 V. As long as the breakdown voltage of the diode is greater than this, the diode will not be damaged.

Full-Wave Rectifier with Capacitor-Input Filter

Figure 4-18*b* shows the essential part of a full-wave rectifier needed to calculate the peak inverse voltage. Again, the secondary voltage is at the negative peak. In this case, the lower diode acts like a short (closed switch) and the upper diode is open. Kirchhoff's law implies:

$$\text{PIV} = V_p \tag{4-12}$$

Bridge Rectifier with Capacitor-Input Filter

Figure 4-18*c* shows part of a bridge rectifier. This is all you need to calculate the peak inverse voltage. Since the upper diode is shorted and the lower one is open, the peak inverse voltage across the lower diode is:

$$\text{PIV} = V_p \tag{4-13}$$

Another advantage of the bridge rectifier is that it has the lowest peak inverse voltage for a given load voltage. To produce the same load voltage, the full-wave rectifier would need twice as much secondary voltage.

Surge Resistor

Before the power is turned on, the filter capacitor is uncharged. At the first instant the power is applied, this capacitor looks like a short. Therefore, the initial charging current may be very large. All that exists in the charging path to impede the current is the resistance of the transformer windings and the bulk resistance of the diodes. The initial rush of current when the power is turned on is called the **surge current.**

Ordinarily, the designer of the power supply will select a diode with enough current rating to withstand the surge current. The key to the surge current is the size of the filter capacitor. Occasionally, a designer may decide to use a **surge resistor** rather than select another diode.

Figure 4-19 illustrates the idea. A small resistor is inserted between the bridge rectifier and the capacitor-input filter. Without the resistor, the surge current might destroy the diodes. By including the surge resistor, the designer reduces the surge current to a safe level. Surge resistors are not used very often and are mentioned just in case you see one used in a power supply.

Figure 4-19 Surge resistor limits surge current.

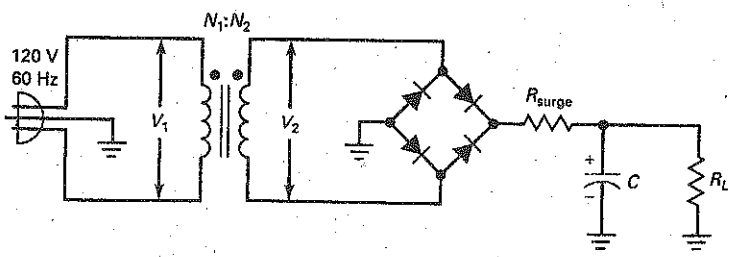

Example 4–10

What is the peak inverse voltage in Fig. 4-19 if the turns ratio is 8:1? A 1N4001 has a breakdown voltage of 50 V. Is it safe to use a 1N4001 in this circuit?

SOLUTION The rms secondary voltage is:

$$V_2 = \frac{120\text{ V}}{8} = 15\text{ V}$$

The peak secondary voltage is:

$$V_p = \frac{15\text{ V}}{0.707} = 21.2\text{ V}$$

The peak inverse voltage is:

$$\text{PIV} = 21.2\text{ V}$$

The 1N4001 is more than adequate, since the peak inverse voltage is much less than the breakdown voltage of 50 V.

PRACTICE PROBLEM 4–10 Using Fig. 4-19, change the transformer's turns ratio to 2:1. Which 1N4000 series of diodes should you use?

4–8 Other Power-Supply Topics

You have a basic idea of how power-supply circuits work. In the preceding sections, you have seen how an ac input voltage is rectified and filtered to get a dc voltage. There are a few additional ideas you need to know about.

Commercial Transformers

The use of turns ratios with transformers applies only to ideal transformers. Iron-core transformers are different. In other words, the transformers you buy from a parts supplier are not ideal because the windings have resistance, which produces power losses. Furthermore, the laminated core has eddy currents, which produce additional power losses. Because of these unwanted power losses, the turns ratio is only an approximation. In fact, the data sheets for transformers rarely list the turns ratio. Usually, all you get is the secondary voltage at a rated current.

For instance, Fig. 4-20*a* shows an F-25X, an industrial transformer whose data sheet gives only the following specifications: for a primary voltage of 115 V ac, the secondary voltage is 12.6 V ac when the secondary current is 1.5 A. If the secondary current is less than 1.5 A in Fig. 4-20*a*, the secondary voltage will be more than 12.6 V ac because of lower power losses in the windings and laminated core.

If it is necessary to know the primary current, you can estimate the turns ratio of a real transformer by using this definition:

$$\frac{N_1}{N_2} = \frac{V_1}{V_2} \tag{4-14}$$

GOOD TO KNOW

When a transformer is unloaded, the secondary voltage usually measures a value that is 5 to 10 percent higher than its rated value.

Figure 4-20 (*a*) Rating on real transformer; (*b*) calculating fuse current.

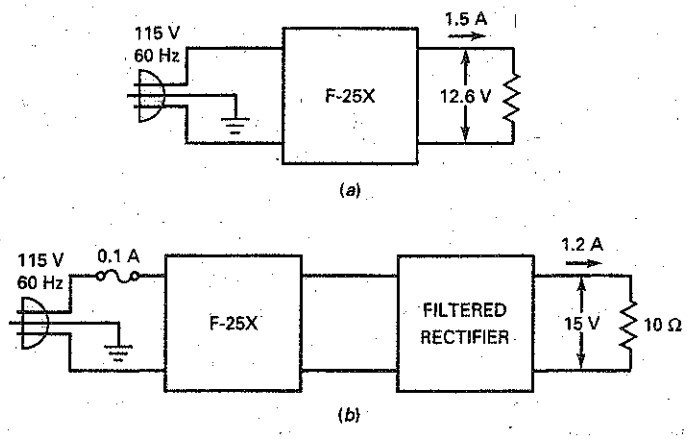

For instance, the F25X has $V_1 = 115$ V and $V_2 = 12.6$ V. The turns ratio at the rated load current of 1.5 A is:

$$\frac{N_1}{N_2} = \frac{115}{12.6} = 9.13$$

This is an approximation because the calculated turns ratio decreases when the load current decreases.

Calculating Fuse Current

When troubleshooting, you may need to calculate the primary current to determine whether a fuse is adequate or not. The easiest way to do this with a real transformer is to assume that the input power equals the output power: $P_{in} = P_{out}$. For instance, Fig. 4-20*b* shows a fused transformer driving a filtered rectifier. Is the 0.1-A fuse adequate?

Here is how to estimate the primary current when troubleshooting. The output power equals the dc load power:

$$P_{out} = VI = (15\text{ V})(1.2\text{ A}) = 18\text{ W}$$

Ignore the power losses in the rectifier and the transformer. Since the input power must equal the output power:

$$P_{in} = 18\text{ W}$$

Since $P_{in} = V_1 I_1$, we can solve for the primary current:

$$I_1 = \frac{18\text{ W}}{115\text{ V}} = 0.156\text{ A}$$

This is only an estimate because we ignored the power losses in the transformer and rectifier. The actual primary current will be higher by about 5 to 20 percent because of these additional losses. In any case, the fuse is inadequate. It should be at least 0.25 A.

Slow-Blow Fuses

Assume that a capacitor-input filter is used in Fig. 4-20*b*. If an ordinary 0.25-A fuse is used in Fig. 4-20*b*, it will blow out when you turn the power on. The reason is the surge current, described earlier. Most power supplies use a slow-blow fuse,

one that can temporarily withstand overloads in current. For instance, a 0.25-A slow-blow fuse can withstand

2 A for 0.1 s
1.5 A for 1 s
1 A for 2 s

and so on. With a slow-blow fuse, the circuit has time to charge the capacitor. Then, the primary current drops down to its normal level with the fuse still intact.

Calculating Diode Current

Whether a half-wave rectifier is filtered or not, the average current through the diode has to equal the dc load current because there is only one path for current. As a derivation:

$$\textbf{Half wave: } I_{diode} = I_{dc} \tag{4-15}$$

On the other hand, the average current through a diode in the full-wave rectifier equals only half the dc load current because there are two diodes in the circuit, each sharing the load. Similarly, each diode in a bridge rectifier has to withstand an average current of half the dc load current. As a derivation:

$$\textbf{Full wave: } I_{diode} = 0.5I_{dc} \tag{4-16}$$

Summary Table 4-2 compares the properties of the three capacitor-input filtered rectifiers.

Reading a Data Sheet

Refer to the data sheet of the 1N4001 in Chap. 3, Fig. 3-16. The maximum peak repetitive reverse voltage, V_{RRM} on the data sheet, is the same as the peak inverse voltage discussed earlier. The data sheet says that the 1N4001 can withstand a voltage of 50 V in the reverse direction.

The average rectified forward current—$I_{F(av)}$, $I_{(max)}$, or I_0—is the dc or average current through the diode. For a half-wave rectifier, the diode current equals the dc load current. For a full-wave or bridge rectifier, it equals half the dc load current. The data sheet says that a 1N4001 can have a dc current of 1 A, which means that the dc load current can be as much as 2 A in a bridge rectifier.

Summary Table 4-2 Capacitor-Input Filtered Rectifiers*

	Half-wave	Full-wave	Bridge
Number of diodes	1	2	4
Rectifier input	$V_{p(2)}$	$0.5V_{p(2)}$	$V_{p(2)}$
DC output (ideal)	$V_{p(2)}$	$0.5V_{p(2)}$	$V_{p(2)}$
DC output (2d)	$V_{p(2)} - 0.7$ V	$0.5V_{p(2)} - 0.7$ V	$V_{p(2)} - 1.4$ V
Ripple frequency	f_{in}	$2f_{in}$	$2f_{in}$
PIV	$2V_{p(2)}$	$V_{p(2)}$	$V_{p(2)}$
Diode current	I_{dc}	$0.5I_{dc}$	$0.5I_{dc}$

*$V_{p(2)}$ = peak secondary voltage; $V_{p(out)}$ = peak output voltage; I_{dc} = dc load current.

Figure 4-21 (*a*) *RC* filtering; (*b*) *LC* filtering; (*c*) voltage-regulator filtering.

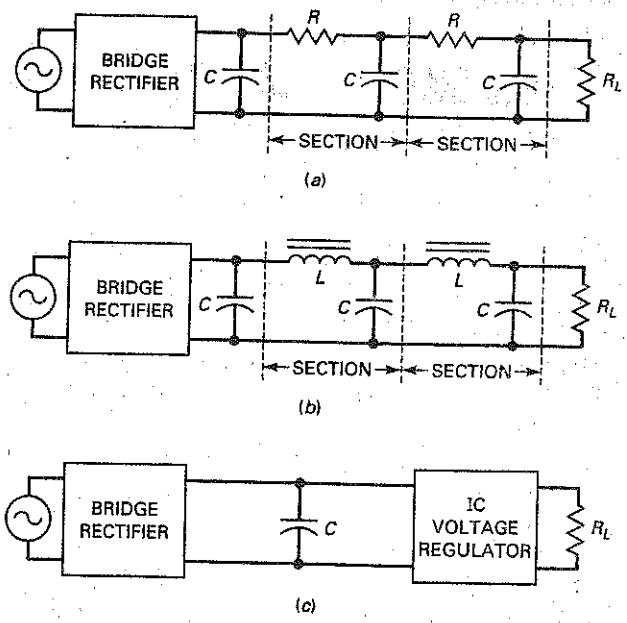

Notice also the surge-current rating I_{FSM}. The data sheet says that a 1N4001 can withstand 30 A during the first cycle when the power is turned on.

RC Filters

Before the 1970s, **passive filters** (*R*, *L*, and *C* components) were often connected between the rectifier and the load resistance. Nowadays, you rarely see passive filters used in semiconductor power supplies, but there might be special applications, such as audio power amplifiers, in which you might encounter them.

Figure 4-21*a* shows a bridge rectifier and a capacitor-input filter. Usually, a designer will settle for a peak-to-peak ripple of as much as 10 percent across the filter capacitor. The reason for not trying to get even lower ripple is because the filter capacitor would become too large. Additional filtering is then done by *RC* sections between the filter capacitor and the load resistor.

The *RC* sections are examples of a passive filter, one that uses only *R*, *L*, or *C* components. By deliberate design, *R* is much greater than X_C at the ripple frequency. Therefore, the ripple is reduced before it reaches the load resistor. Typically, *R* is at least 10 times greater than X_C. This means that each section attenuates (reduces) the ripple by a factor of at least 10. The disadvantage of an *RC* filter is the loss of dc voltage across each *R*. Because of this, the *RC* filter is suitable only for very light loads (small load current or large load resistance).

LC Filter

When the load current is large, the *LC* filters of Fig. 4-21*b* are an improvement over *RC* filters. Again, the idea is to drop the ripple across the series components, in this case, the inductors. By making X_L much greater than X_C, we can reduce the ripple to a very low level. The dc voltage drop across the inductors is much smaller than it is across the resistors of *RC* sections because the winding resistance is smaller.

The *LC* filter was very popular at one time. Now, it's becoming obsolete in typical power supplies because of the size and cost of inductors. For low-voltage

Summary Table 4-3 Power Supply Block Diagram

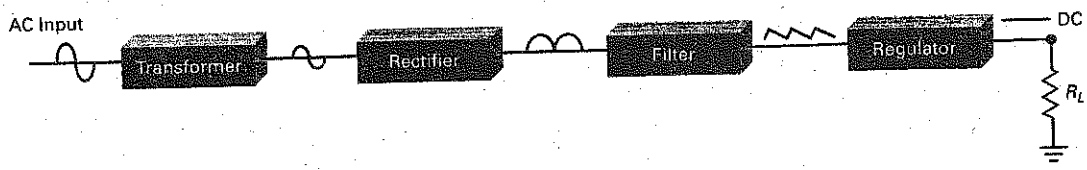

Purpose	Provides proper secondary ac voltage and ac ground isolation	Changes ac input to pulsating dc	Smooths out dc pulses	Provides a constant output voltage under varying loads and ac input voltage
Types	Step-up, step-down, isolation (1:1)	Half-wave, full-wave, full-wave bridge	Choke-input, capacitor input	Discrete components, integrated circuit (IC)

GOOD TO KNOW

A filter made of an inductor placed in between two capacitors is often called a pi (π) filter.

power supplies, the *LC* filter has been replaced by an **integrated circuit (IC).** This is a device that contains diodes, transistors, resistors, and other components in a miniaturized package to perform a specific function.

Figure 4-21*c* illustrates the idea. An **IC voltage regulator,** one type of integrated circuit, is between the filter capacitor and the load resistor. This device not only reduces the ripple, it also holds the output voltage constant. We will discuss IC voltage regulators in a later chapter. Because of their low cost, IC voltage regulators are now the standard method used for ripple reduction.

Summary Table 4-3 breaks the power supply down into functional blocks.

4-9 Troubleshooting

Almost every piece of electronics equipment has a power supply, typically a rectifier driving a capacitor-input filter followed by a voltage regulator (discussed later). This power supply produces the dc voltages needed by transistors and other devices. If a piece of electronics equipment is not working properly, start your troubleshooting with the power supply. More often than not, *equipment failure is caused by troubles in the power supply.*

Procedure

Assume that you are troubleshooting the circuit of Fig. 4-22. You can start by measuring the dc load voltage. It should be approximately the same as the peak secondary voltage. If not, there are two possible courses of action.

First, if there is no load voltage, you can use a floating VOM or DMM to measure the secondary voltage (ac range). The reading is the rms voltage across the secondary winding. Convert this to peak value. You can estimate the peak value by adding 40 percent to the rms value. If this is normal, the diodes may be defective. If there is no secondary voltage, either the fuse is blown or the transformer is defective.

Second, if there is dc load voltage, but it is lower than it should be, look at the dc load voltage with an oscilloscope and measure the ripple. A peak-to-peak ripple around 10 percent of the ideal load voltage is reasonable. The ripple may be

Figure 4-22 Troubleshooting.

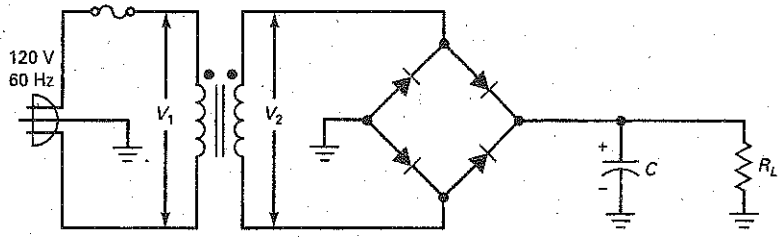

somewhat more or less than this, depending on the design. Furthermore, the ripple frequency should be 120 Hz for a full-wave or bridge rectifier. If the ripple is 60 Hz, one of the diodes may be open.

Common Troubles

Here are the most common troubles that arise in bridge rectifiers with capacitor-input filters:

1. If the fuse is open, there will be no voltages anywhere in the circuit.
2. If the filter capacitor is open, the dc load voltage will be low because the output will be an unfiltered full-wave signal.
3. If one of the diodes is open, the dc load voltage will be low because there will be only half-wave rectification. Also, the ripple frequency will be 60 Hz instead of 120 Hz. If all diodes are open, there will be no output.
4. If the load is shorted, the fuse will be blown. Possibly, one or more diodes may be ruined or the transformer may be damaged.
5. Sometimes the filter capacitor becomes leaky with age, and this reduces the dc load voltage.
6. Occasionally, shorted windings in the transformer reduce the dc output voltage. In this case, the transformer often feels very warm to the touch.
7. Besides these troubles, you can have solder bridges, cold-solder joints, bad connections, and so on.

Summary Table 4-4 lists these troubles and their symptoms.

Summary Table 4-4 Typical Troubles for Capacitor-Input Filtered Bridge Rectifier

	V_1	V_2	$V_{L(dc)}$	V_R	f_{ripple}	Scope on Output
Fuse blown	Zero	Zero	Zero	Zero	Zero	No output
Capacitor open	OK	OK	Low	High	120 Hz	Full-wave signal
One diode open	OK	OK	Low	High	60 Hz	Half-wave ripple
All diodes open	OK	OK	Zero	Zero	Zero	No output
Load shorted	Zero	Zero	Zero	Zero	Zero	No output
Leaky capacitor	OK	OK	Low	High	120 Hz	Low output
Shorted windings	OK	Low	Low	OK	120 Hz	Low output

Example 4–11

When the circuit of Fig. 4-23 is working normally, it has an rms secondary voltage of 12.7 V, a load voltage of 18 V, and a peak-to-peak ripple of 318 mV. If the filter capacitor is open, what happens to the dc load voltage?

Figure 4-23

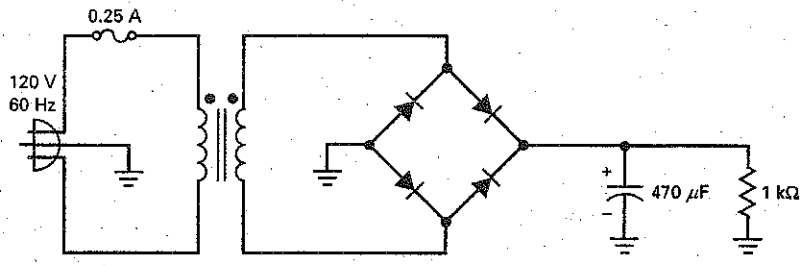

SOLUTION With an open filter capacitor, the circuit reverts to a bridge rectifier with no filter capacitor. Because there is no filtering, an oscilloscope across the load will display a full-wave signal with a peak value of 18 V. The average value is 63.6 percent of 18 V, which is 11.4 V.

Example 4–12

Suppose the load resistor of Fig. 4-23 is shorted. Describe the symptoms.

SOLUTION A short across the load resistor will increase the current to a very high value. This will blow out the fuse. Furthermore, it is possible that one or more diodes will be destroyed before the fuse blows. Often, when one diode shorts, it will cause the other rectifier diodes to also short. Because of the blown fuse, all voltages will measure zero. When you check the fuse visually or with an ohmmeter, you will see that it is open.

With the power off, you should check the diodes with an ohmmeter to see whether any of them have been destroyed. You should also measure the load resistance with an ohmmeter. If it measures zero or very low, you have more troubles to locate.

The trouble could be a solder bridge across the load resistor, incorrect wiring, or any number of possibilities. Fuses do occasionally blow out without a permanent short across the load. But the point is this: *When you get a blown fuse, check the diodes for possible damage and the load resistance for a possible short.*

A troubleshooting exercise at the end of the chapter has eight different troubles, including open diodes, filter capacitors, shorted loads, blown fuses, and open grounds.

4–10 Clippers and Limiters

The diodes used in low-frequency power supplies are *rectifier diodes.* These diodes are optimized for use at 60 Hz and have power ratings greater than 0.5 W. The typical rectifier diode has a forward current rating in amperes. Except for power supplies, rectifier diodes have little use because most circuits inside electronics equipment are running at much higher frequencies.

Figure 4-24 (*a*) Positive clipper; (*b*) output waveform.

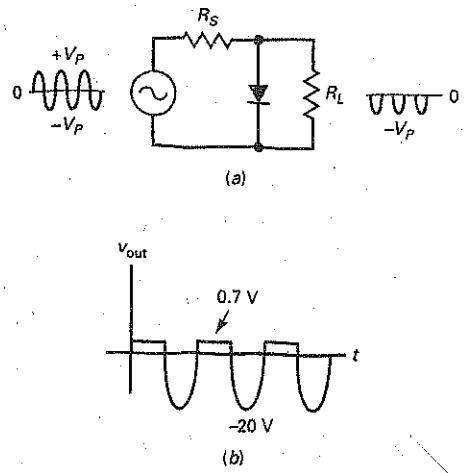

Small-Signal Diodes

In this section, we will be using *small-signal diodes*. These diodes are optimized for use at high frequencies and have power ratings less than 0.5 W. The typical small-signal diode has a current rating in milliamperes. It is this smaller and lighter construction that allows the diode to work at higher frequencies.

The Positive Clipper

A **clipper** is a circuit that removes either positive or negative parts of a waveform. This kind of processing is useful for signal shaping, circuit protection, and communications. Figure 4-24*a* shows a *positive clipper*. The circuit removes all the positive parts of the input signal. This is why the output signal has only negative half cycles.

Here is how the circuit works: During the positive half cycle, the diode turns on and looks like a short across the output terminals. Ideally, the output voltage is zero. On the negative half cycle, the diode is open. In this case, a negative half cycle appears across the output. By deliberate design, the series resistor is much smaller than the load resistor. This is why the negative output peak is shown as $-V_p$ in Fig. 4-24*a*.

To a second approximation, the diode voltage is 0.7 V when conducting. Therefore, the clipping level is not zero, but 0.7 V. For instance, if the input signal has a peak value of 20 V, the output of the clipper will look like Fig. 4-24*b*.

Defining Conditions

Small-signal diodes have a smaller junction area than rectifier diodes because they are optimized to work at higher frequencies. As a result, they have more bulk resistance. The data sheet of a small-signal diode like the 1N914 lists a forward current of 10 mA at 1 V. Therefore, the bulk resistance is:

$$R_B = \frac{1\text{ V} - 0.7\text{ V}}{10\text{ mA}} = 30\ \Omega$$

Why is bulk resistance important? Because the clipper will not work properly unless the series resistance R_S is much greater than the bulk resistance. Furthermore, the clipper won't work properly unless the series resistance R_S is

Figure 4-25 (*a*) Negative clipper; (*b*) output waveform.

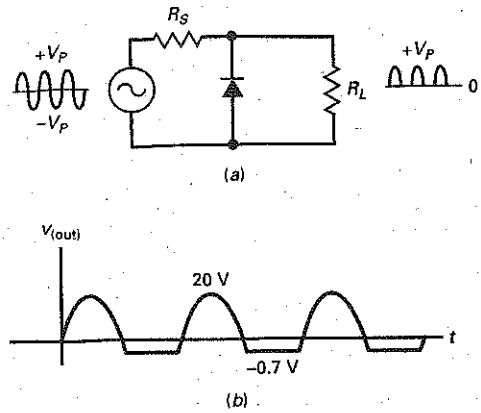

much smaller than the load resistance. For a clipper to work properly, we will use this definition:

$$\textbf{Stiff clipper: } 100R_B < R_S < 0.01R_L \tag{4-17}$$

This says that the series resistance must be 100 times greater than the bulk resistance and 100 times smaller than the load resistance. When a clipper satisfies these conditions, we call it a *stiff clipper.* For instance, if the diode has a bulk resistance of 30 Ω, the series resistance should be at least 3 kΩ and the load resistance should be at least 300 kΩ.

The Negative Clipper

If we reverse the polarity of the diode as shown in Fig. 4-25*a*, we get a *negative clipper.* As you would expect, this removes the negative parts of the signal. Ideally, the output waveform has nothing but positive half cycles.

The clipping is not perfect. Because of the diode *offset voltage* (another way of saying *barrier potential*), the clipping level is at −0.7 V. If the input signal has a peak of 20 V, the output signal will look like Fig. 4-25*b*.

The Limiter or Diode Clamp

The clipper is useful for waveshaping, but the same circuit can be used in a totally different way. Take a look at Fig. 4-26*a*. The normal input to this circuit is a signal with a peak of only 15 mV. Therefore, the normal output is the same signal because neither diode is turned during the cycle.

What good is the circuit if the diodes don't turn on? Whenever you have a sensitive circuit, one that cannot have too much input, you can use a positive-negative *limiter* to protect its input, as shown in Fig. 4-26*b*. If the input signal tries to rise above 0.7 V, the output is limited to 0.7 V. On the other hand, if the input signal tries to drop below −0.7 V, the output is limited to −0.7 V. In a circuit like this, normal operation means that the input signal is always smaller than 0.7 V in either polarity.

An example of a sensitive circuit is the *op amp,* an IC that will be discussed in later chapters. The typical input voltage to an op amp is less than 15 mV. Voltages greater than 15 mV are unusual, and voltages greater than 0.7 V are abnormal. A limiter on the input side of an op amp will prevent excessive input voltage from being accidentally applied.

GOOD TO KNOW

Negative diode clamps are often used on the inputs of digital TTL logic gates.

Figure 4-26 (*a*) Diode clamp; (*b*) protecting a sensitive circuit.

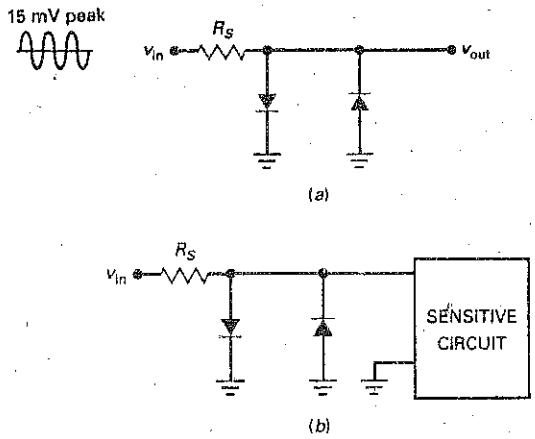

A more familiar example of a sensitive circuit is a moving-coil meter. By including a limiter, we can protect the meter movement against excessive input voltage or current.

The limiter of Fig. 4-26*a* is also called a *diode clamp*. The term suggests clamping or limiting the voltage to a specified range. With a diode clamp, the diodes remain off during normal operation. The diodes conduct only when something is abnormal, when the signal is too large.

Biased Clippers

The reference level (same as the clipping level) of a positive clipper is ideally zero, or 0.7 V to a second approximation. What can we do to change this reference level?

In electronics, *bias* means applying an external voltage to change the reference level of a circuit. Figure 4-27*a* is an example of using bias to change the reference level of a positive clipper. By adding a dc voltage source in series with the diode, we can change the clipping level. The new V must be less than V_p for normal operation. With an ideal diode, conduction starts as soon as the input

Figure 4-27 (*a*) Biased positive clipper; (*b*) biased negative clipper.

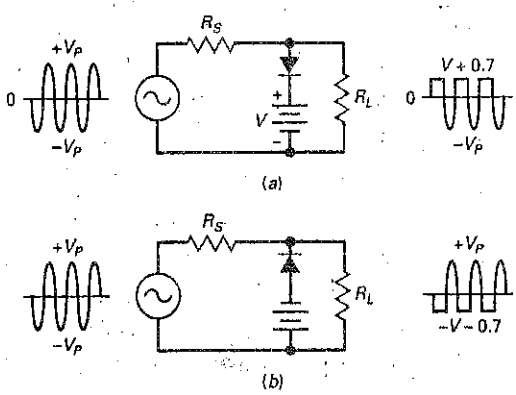

Figure 4-28 Biased positive-negative clipper.

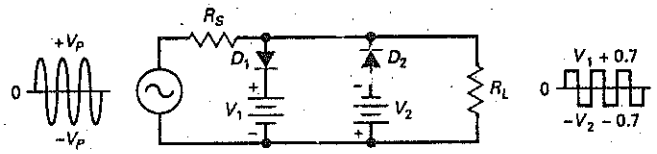

voltage is greater than V. To a second approximation, it starts when the input voltage is greater than $V + 0.7$ V.

Figure 4-27*b* shows how to bias a negative clipper. Notice that the diode and battery have been reversed. Because of this, the reference level changes to $-V - 0.7$ V. The output waveform is negatively clipped at the bias level.

Combination Clipper

We can combine the two biased clippers as shown in Fig. 4-28. Diode D_1 clips off positive parts above the positive bias level, and diode D_2 clips off parts below the negative bias level. When the input voltage is very large compared to the bias levels, the output signal is a *square wave*, as shown in Fig. 4-28. This is another example of the signal shaping that is possible with clippers.

Variations

Using batteries to set the clipping level is impractical. One approach is to add more silicon diodes because each produces a bias of 0.7 V. For instance, Fig. 4-29*a* shows three diodes in a positive clipper. Since each diode has an offset of around 0.7 V, the three diodes produce a clipping level of approximately +2.1 V. The application does not have to be a clipper (waveshaping). We can use the same circuit as a diode clamp (limiting) to protect a sensitive circuit that cannot tolerate more than a 2.1-V input.

Figure 4-29*b* shows another way to bias a clipper without batteries. This time, we are using a voltage divider (R_1 and R_2) to set the bias level. The bias level is given by:

$$V_{bias} = \frac{R_2}{R_1 + R_2} V_{dc} \tag{4-18}$$

In this case, the output voltage is clipped or limited when the input is greater than $V_{bias} + 0.7$ V.

Figure 4-29*c*, shows a biased diode clamp. It can be used to protect sensitive circuits from excessive input voltages. The bias level is shown as +5 V. It can be any bias level you want it to be. With a circuit like this, a destructively large voltage of +100 V never reaches the load because the diode limits the output voltage to a maximum value of +5.7 V.

Sometimes a variation like Fig. 4-29*d* is used to remove the offset of the limiting diode D_1. Here is the idea: Diode D_2 is biased slightly into forward conduction, so that it has approximately 0.7 V across it. This 0.7 V is applied to 1 kΩ in series with D_1 and 100 kΩ. This means that diode D_1 is on the verge of conduction. Therefore, when a signal comes in, diode D_1 conducts near 0 V.

Figure 4-29 (*a*) Clipper with three offset voltages; (*b*) voltage divider biases clipper; (*c*) diode clamp protects above 5.7 V; (*d*) diode D_2 biases D_1 to remove offset voltage.

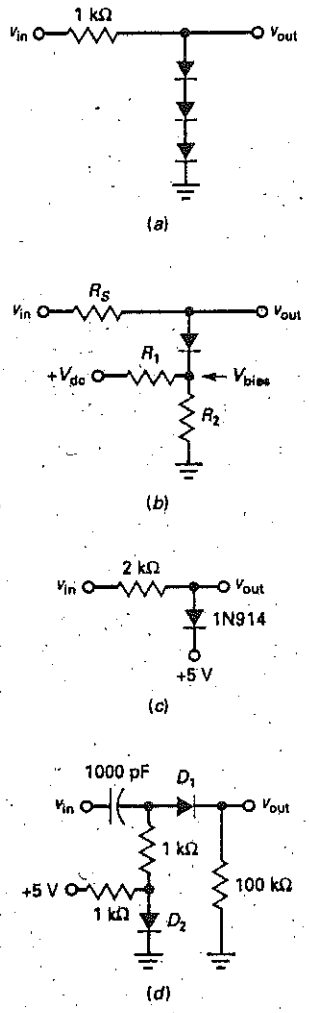

4-11 Clampers

The diode clamp, which was discussed in the preceding section, protects sensitive circuits. The **clamper** is different, so don't confuse the similar-sounding names. A clamper adds a dc voltage to the signal.

Positive Clamper

Figure 4-30*a* shows the basic idea for a positive clamper. When a positive clamper has a sine-wave input, it adds a positive dc voltage to the sine wave. Stated another way, the positive clamper shifts the ac reference level (normally zero) up to a dc level. The effect is to have an ac voltage centered on a dc level. This means that each point on the sine wave is shifted upward, as shown on the output wave.

Figure 4-30*b* shows an equivalent way of visualizing the effect of a positive clamper. An ac source drives the input side of the clamper. The Thevenin voltage of the clamper output is the superposition of a dc source and an ac source. The ac signal has a dc voltage of V_p added to it. This is why the entire sine wave of Fig. 4-30*a* has shifted upward so that it has a positive peak of $2V_p$ and a negative peak of zero.

GOOD TO KNOW

Clampers are commonly used in analog television receivers for the purpose of restoring the dc component of the video signal prior to its being fed to the picture tube.

Figure 4-31*a* is a positive clamper. Ideally, here is how it works. The capacitor is initially uncharged. On the first negative half cycle of input voltage, the diode turns on (Fig. 4-31*b*). At the negative peak of the ac source, the capacitor has fully charged and its voltage is V_p with the polarity shown.

Slightly beyond the negative peak, the diode shuts off (Fig. 4-31*c*). The R_LC time constant is deliberately made much larger than the period T of the signal. We will define *much larger* as at least 100 times greater:

$$\textbf{Stiff clamper: } R_LC > 100T \tag{4-19}$$

For this reason, the capacitor remains almost fully charged during the off time of the diode. To a first approximation, the capacitor acts like a battery of V_p volts. This is why the output voltage in Fig. 4-31*a* is a positively clamped signal. Any clamper that satisfies Eq. (4-19) is called a *stiff clamper.*

Figure 4-30 (*a*) Positive clamper shifts waveform upward; (*b*) positive clamper adds a dc component to signal.

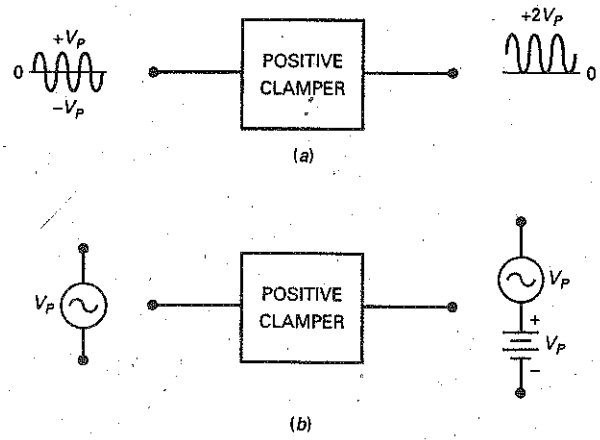

Figure 4-31 (*a*) Ideal positive clamper; (*b*) at the positive peak; (*c*) beyond the positive peak; (*d*) clamper is not quite perfect.

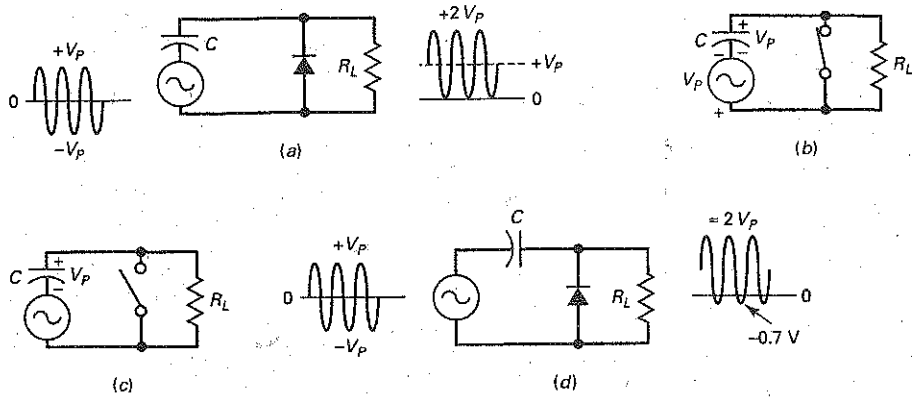

The idea is similar to the way a half-wave rectifier with a capacitor-input filter works. The first quarter cycle charges the capacitor fully. Then, the capacitor retains almost all of its charge during subsequent cycles. The small charge that is lost between cycles is replaced by diode conduction.

In Fig. 4-31*c*, the charged capacitor looks like a battery with a voltage of V_p. This is the dc voltage that is being added to the signal. After the first quarter cycle, the output voltage is a positively clamped sine wave with a reference level of zero; that is, it sits on a level of 0 V.

Figure 4-31*d* shows the circuit as it is usually drawn. Since the diode drops 0.7 V when conducting, the capacitor voltage does not quite reach V_p. For this reason, the clamping is not perfect, and the negative peaks have a reference level of −0.7 V.

Negative Clamper

What happens if we turn the diode in Fig. 4-31*d* around? We get the negative clamper of Fig. 4-32. As you can see, the capacitor voltage reverses, and the circuit becomes a negative clamper. Again, the clamping is less than perfect because the positive peaks have a reference level of 0.7 V instead of 0 V.

As a memory aid, notice that the diode points in the direction of shift. In Fig. 4-32, the diode points downward, the same direction as the shift of the sine wave. This tells you that it's a negative clamper. In Fig. 4-31*a*, the diode points up, the waveform shifts up, and you have positive clamper.

Figure 4-32 Negative clamper.

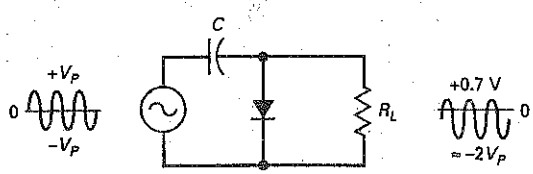

Figure 4-33 Peak-to-peak detector.

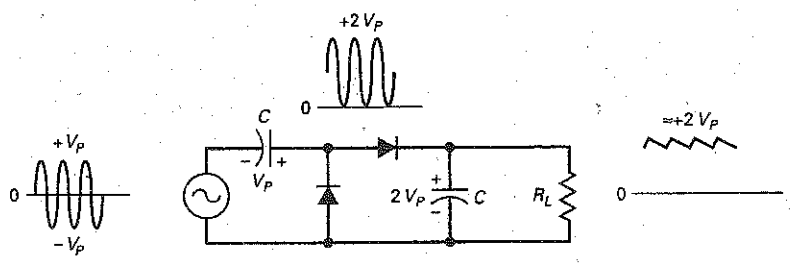

Both positive and negative clampers are widely used. For instance, television receivers use a clamper to change the reference level of video signals. Clampers are also used in radar and communication circuits.

A final point. The less than perfect clipping and clamping discussed so far are no problem. After we discuss op amps, we will look again at clippers and clampers. At that time, you will see how easy it is to eliminate the barrier-potential problem. In other words, we will look at circuits that are almost perfect.

Peak-to-Peak Detector

A half-wave rectifier with a capacitor-input filter produces a dc output voltage approximately equal to the peak of the input signal. When the same circuit uses a small-signal diode, it is called a **peak detector.** Typically, peak detectors operate at frequencies that are much higher than 60 Hz. The output of a peak detector is useful in measurements, signal processing, and communications.

If you cascade a clamper and a peak detector, you get a *peak-to-peak detector* (see Fig. 4-33). As you can see, the output of a clamper is used as the input to a peak detector. Since the sine wave is positively clamped, the input to the peak detector has a peak value of $2V_p$. This is why the output of the peak detector is a dc voltage equal to $2V_p$.

As usual, the RC time constant must be much greater than the period of the signal. By satisfying this condition, you get good clamping action and good peak detection. The output ripple will therefore be small.

One application is in measuring nonsinusoidal signals. An ordinary ac voltmeter is calibrated to read the rms value of an ac signal. If you try to measure a nonsinusoidal signal, you will get an incorrect reading with an ordinary ac voltmeter. However, if the output of a peak-to-peak detector is used as the input to a dc voltmeter, it will indicate the peak-to-peak voltage. If the nonsinusoidal signal swings from −20 to + 50 V, the reading is 70 V.

4-12 Voltage Multipliers

A peak-to-peak detector uses small-signal diodes and operates at high frequencies. By using rectifier diodes and operating at 60 Hz, we can produce a new kind of power supply called a *voltage doubler.*

Figure 4-34 Voltage multipliers with floating loads. (*a*) Doubler; (*b*) tripler; (*c*) quadrupler.

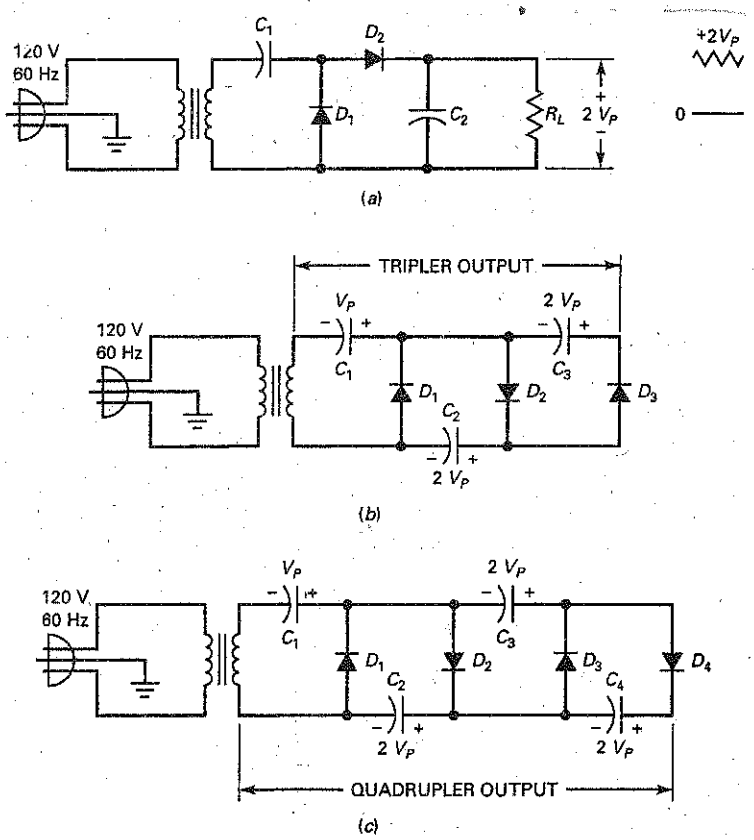

Voltage Doubler

Figure 4-34*a* is a *voltage doubler.* The configuration is the same as a peak-to-peak detector, except that we use rectifier diodes and operate at 60 Hz. The clamper section adds a dc component to the secondary voltage. The peak detector then produces a dc output voltage that is 2 times the secondary voltage.

Why bother using a voltage doubler when you can change the turns ratio to get more output voltage? The answer is that you don't need to use a voltage doubler at lower voltages. The only time you run into a problem is when you are trying to produce very high dc output voltages.

For instance, line voltage is 120 V rms, or 170 V peak. If you are trying to produce 3400 V dc, you will need to use a 1:20 step-up transformer. Here is where the problem comes in. Very high secondary voltages can be obtained only with bulky transformers. At some point, a designer may decide that it would be simpler to use a voltage doubler and a smaller transformer.

Voltage Tripler

By connecting another section, we get the *voltage tripler* of Fig. 4-34*b*. The first two sections act like a doubler. At the peak of the negative half cycle, D_3 is forward-biased. This charges C_3 to $2V_p$ with the polarity shown in Fig. 4-34*b*. The tripler output appears across C_1 and C_3. The load resistance can be connected across the tripler output. As long as the time constant is long, the output equals approximately $3V_p$.

Voltage Quadrupler

Figure 4-34*c* is a *voltage quadrupler* with four sections in *cascade* (one after another). The first three sections are a tripler, and the fourth makes the overall circuit a quadrupler. The first capacitor charges to V_p. All others charge to $2V_p$. The quadrupler output is across the series connection of C_2 and C_4. We can connect a load resistance across the quadrupler output to get an output of $4V_p$.

Theoretically, we can add sections indefinitely, but the ripple gets much worse with each new section. Increased ripple is another reason why **voltage multipliers** (doublers, triplers, and quadruplers) are not used in low-voltage power supplies. As stated earlier, voltage multipliers are almost always used to produce high voltages, well into the hundreds or thousands of volts. Voltage multipliers are the natural choice for high-voltage and low-current devices like the cathode-ray tube (CRT) used in television receivers, oscilloscopes, and computer monitors.

Variations

All of the voltage multipliers shown in Fig. 4-34 use load resistances that are *floating*. This means that neither end of the load is grounded. Figure 4-35*a*, *b*, and *c* shows variations of the voltage multipliers. Figure 4-35*a* merely adds grounds to Fig. 4-34*a*. On the other hand, Fig. 4-35*b* and *c* are redesigns of the tripler (Fig. 4-34*b*) and quadrupler (Fig. 4-34*c*). In some applications, you may see floating-load designs used (such as in the CRT); in others, you may see the grounded-load designs used.

Full-Wave Voltage Doubler

Figure 4-35*d* shows a full-wave voltage doubler. On the positive half cycle of the source, the upper capacitor charges to the peak voltage with the polarity shown. On the next half cycle, the lower capacitor charges to the peak voltage with the indicated polarity. For a light load, the final output voltage is approximately $2V_p$.

The voltage multipliers discussed earlier are half-wave designs; that is, the output ripple frequency is 60 Hz. On the other hand, the circuit of Fig. 4-35*d* is called a *full-wave voltage doubler* because one of the output capacitors is being charged during each half cycle. Because of this, the output ripple is 120 Hz. This ripple frequency is an advantage because it is easier to filter. Another advantage of the full-wave doubler is that the PIV rating of the diodes need only be greater than V_p.

Figure 4-35 Voltage multipliers with grounded loads, except full-wave doubler. (*a*) Doubler; (*b*) tripler; (*c*) quadrupler; (*d*) Full-wave doubler.

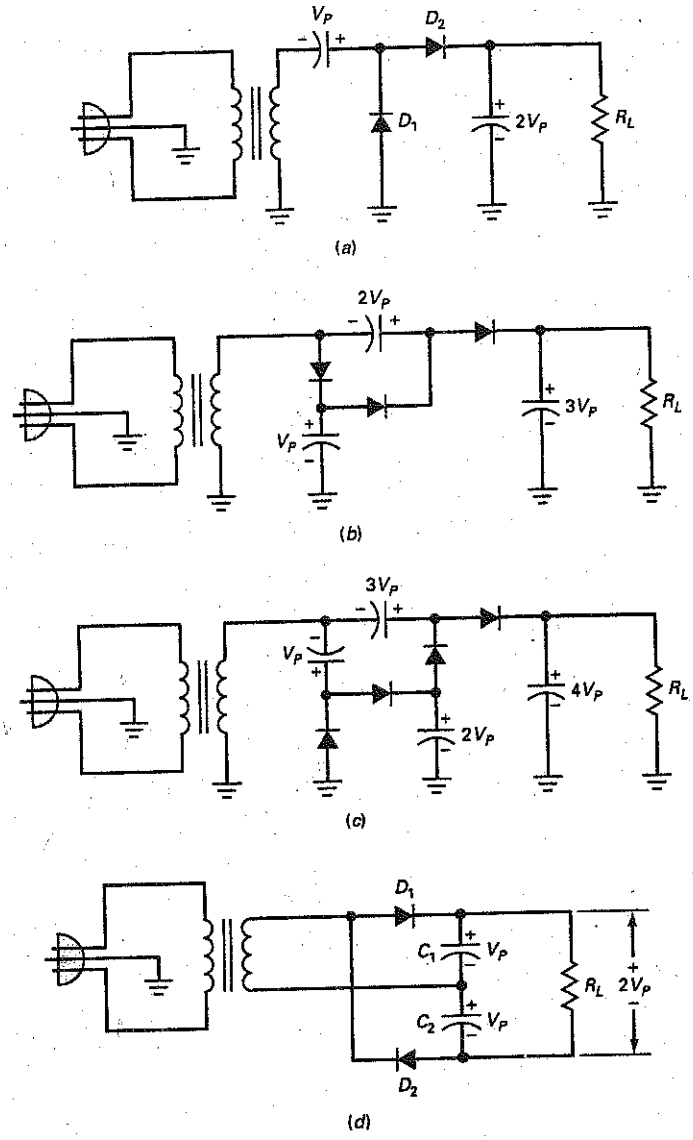

Summary

SEC. 4-1 THE HALF-WAVE RECTIFIER

The half-wave rectifier has a diode in series with a load resistor. The load voltage is a half-wave output. The average or dc voltage out of a half-wave rectifier equals 31.8 percent of the peak voltage.

SEC. 4-2 THE TRANSFORMER

The input transformer is usually a step-down transformer in which the voltage steps down and the current steps up. The secondary voltage equals the primary voltage divided by the turns ratio.

SEC. 4-3 THE FULL-WAVE RECTIFIER

The full-wave rectifier has a center-tapped transformer with two diodes and a load resistor. The load voltage is a full-wave signal whose peak value is half the secondary voltage. The average or dc voltage out of a full-wave rectifier equals 63.6 percent of the peak voltage, and the ripple frequency equals 120 Hz instead of 60 Hz.

SEC. 4-4 THE BRIDGE RECTIFIER

The bridge rectifier has four diodes. The load voltage is a full-wave signal with a peak value equal to the secondary voltage. The average or dc voltage out of a half-wave rectifier equals 63.6 percent of the peak voltage, and the ripple frequency equals 120 Hz.

SEC. 4-5 THE CHOKE-INPUT FILTER

The choke-input filter is an *LC* voltage divider in which the inductive reactance is much greater than the capacitive reactance. The type of filter allows the average value of the rectified signal to pass through to the load resistor.

SEC. 4-6 THE CAPACITOR-INPUT FILTER

This type of filter allows the peak value of the rectified signal to pass through to the load resistor. With a large capacitor, the ripple is small, typically less than 10 percent of the dc voltage. The capacitor-input filter is the most widely used filter in power supplies.

SEC. 4-7 PEAK INVERSE VOLTAGE AND SURGE CURRENT

The peak inverse voltage is the maximum voltage that appears across the nonconducting diode of a rectifier circuit. This voltage must be less than the breakdown voltage of the diode. The surge current is the brief and large current that exists when the power is first turned on. It is brief and large because the filter capacitor must charge to the peak voltage during the first cycle or, at most, during the first few cycles.

SEC. 4-8 OTHER POWER-SUPPLY TOPICS

Real transformers usually specify the secondary voltage at a rated load current. To calculate the primary current, you can assume that the input power equals the output power. Slow-blow fuses are typically used to protect against the surge current. The average diode current in a half-wave rectifier equals the dc load current. In a full-wave or bridge rectifier, the average current in any diode is half the dc load current. *LC* filters and *LC* filters may occasionally be used to filter the rectified output.

SEC. 4-9 TROUBLESHOOTING

Some of the measurements that can be made with a capacitor-input filter are the dc output voltage, the primary voltage, the secondary voltage, and the ripple. From these, you can usually deduce the trouble. Open diodes reduce the output voltage to zero. An open filter capacitor reduces the output to the average value of the rectified signal.

SEC. 4-10 CLIPPERS AND LIMITERS

A clipper shapes the signal. It clips off positive or negative parts of the signal. The limiter or diode clamp protects sensitive circuits from too much input.

SEC. 4-11 CLAMPERS

The clamper shifts a signal positively or negatively by adding a dc voltage to the signal. The peak-to-peak detector produces a load voltage equal to the peak-to-peak value.

SEC. 4-12 VOLTAGE MULTIPLIERS

The voltage doubler is a redesign of the peak-to-peak detector. It uses rectifier diodes instead of small-signal diodes. It produces an output equal to 2 times the peak value of the rectified signal. Voltage triplers and quadruplers multiply the input peak by factors of 3 and 4. Very high voltage power supplies are the main use of voltage multipliers.

Definitions

(4-14) Turns ratio:

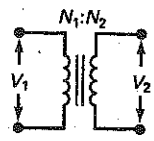

$$\frac{N_1}{N_2} = \frac{V_1}{V_2}$$

(4-17) Stiff clipper:

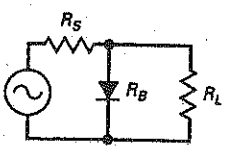

$$100R_B < R_S < 0.01R_L$$

(4-19) Stiff clamper:

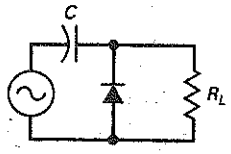

$$R_LC > 100T$$

Derivations

(4-1) Ideal half-wave:

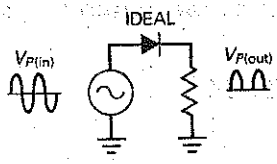

$V_{p(out)} = V_{p(in)}$

(4-2) Half-wave:

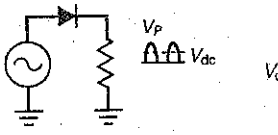

$V_{dc} = \frac{V_p}{\pi}$

(4-3) Half-wave:

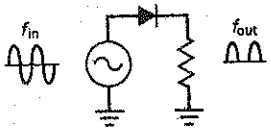

$f_{out} = f_{in}$

(4-4) 2d half-wave:

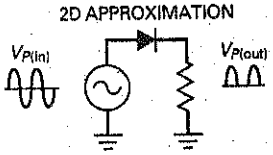

$V_{p(out)} = V_{p(in)} - 0.7\ \text{V}$

(4-5) Ideal transformer:

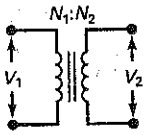

$V_2 = \frac{V_1}{N_1/N_2}$

(4-6) Full-wave:

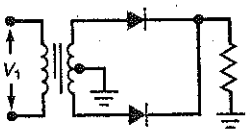

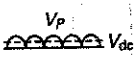

$V_{dc} = \frac{2V_p}{\pi}$

(4-7) Full-wave:

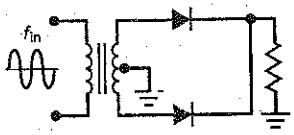

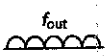

$f_{out} = 2f_{in}$

(4-8) 2d bridge:

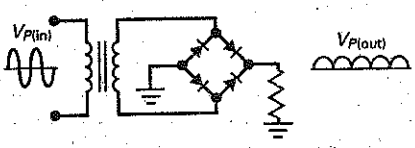

$V_{p(out)} = V_{p(in)} - 1.4\ \text{V}$

(4-9) Choke-input filter:

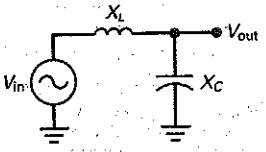

$V_{out} \approx \frac{X_C}{X_L} V_{in}$

(4-10) Peak-to-peak ripple:

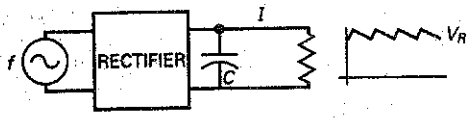

$V_R = \frac{I}{fC}$

(4-11) Half-wave:

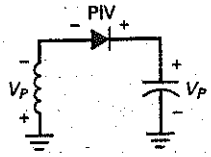

$\text{PIV} = 2V_p$

(4-12) Full-wave:

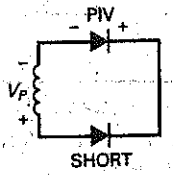

$\text{PIV} = V_p$

(4-13) Bridge:

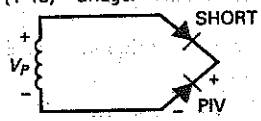

$\text{PIV} = V_p$

(4-15) Half-wave:

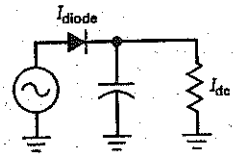

$I_{diode} = I_{dc}$

(4-16) Full-wave and bridge:

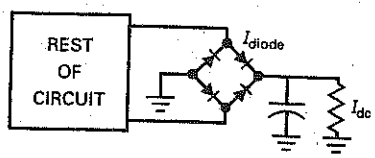

$I_{diode} = 0.5I_{dc}$

(4-18) Biased clipper:

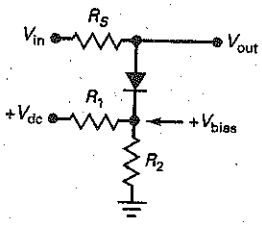

$$V_{bias} = \frac{R_2}{R_1 + R_2}V_{dc}$$

Student Assignments

1. **If $N_1/N_2 = 4$, and the primary voltage is 120 V, what is the secondary voltage?**
   a. 0 V
   b. 30 V
   c. 60 V
   d. 480 V

2. **In a step-down transformer, which is larger?**
   a. Primary voltage
   b. Secondary voltage
   c. Neither
   d. No answer possible

3. **A transformer has a turns ratio of 2:1. What is the peak secondary voltage if 115 V rms is applied to the primary winding?**
   a. 57.5 V
   b. 81.3 V
   c. 230 V
   d. 325 V

4. **With a half-wave rectified voltage across the load resistor, load current flows for what part of a cycle?**
   a. 0°
   b. 90°
   c. 180°
   d. 360°

5. **Suppose line voltage may be as low as 105 V rms or as high as 125 rms in a half-wave rectifier. With a 5:1 step-down transformer, the minimum peak load voltage is closest to**
   a. 21 V
   b. 25 V
   c. 29.7 V
   d. 35.4 V

6. **The voltage out of a bridge rectifier is a**
   a. Half-wave signal
   b. Full-wave signal
   c. Bridge-rectified signal
   d. Sine wave

7. **If the line voltage is 115 V rms, a turns ratio of 5:1 means the rms secondary voltage is closest to**
   a. 15 V
   b. 23 V
   c. 30 V
   d. 35 V

8. **What is the peak load voltage in a full-wave rectifier if the secondary voltage is 20 V rms?**
   a. 0 V
   b. 0.7 V
   c. 14.1 V
   d. 28.3 V

9. **We want a peak load voltage of 40 V out of a bridge rectifier. What is the approximate rms value of secondary voltage?**
   a. 0 V
   b. 14.4 V
   c. 28.3 V
   d. 56.6 V

10. **With a full-wave rectified voltage across the load resistor, load current flows for what part of a cycle?**
    a. 0°
    b. 90°
    c. 180°
    d. 360°

11. **What is the peak load voltage out of a bridge rectifier for a secondary voltage of 12.6 V rms? (Use second approximation.)**
    a. 7.5 V
    b. 16.4 V
    c. 17.8 V
    d. 19.2 V

12. **If line frequency is 60 Hz, the output frequency of a half-wave rectifier is**
    a. 30 Hz
    b. 60 Hz
    c. 120 Hz
    d. 240 Hz

13. **If line frequency is 60 Hz, the output frequency of a bridge rectifier is**
    a. 30 Hz
    b. 60 Hz
    c. 120 Hz
    d. 240 Hz

14. **With the same secondary voltage and filter, which has the most ripple?**
    a. Half-wave rectifier
    b. Full-wave rectifier
    c. Bridge rectifier
    d. Impossible to say

15. **With the same secondary voltage and filter, which produces the least load voltage?**
    a. Half-wave rectifier
    b. Full-wave rectifier
    c. Bridge rectifier
    d. Impossible to say

16. If the filtered load current is 10 mA, which of the following has a diode current of 10 mA?
   a. Half-wave rectifier
   b. Full-wave rectifier
   c. Bridge rectifier
   d. Impossible to say

17. If the load current is 5 mA and the filter capacitance is 1000 μF, what is the peak-to-peak ripple out of a bridge rectifier?
   a. 21.3 pV
   b. 56.3 nV
   c. 21.3 mV
   d. 41.7 mV

18. The diodes in a bridge rectifier each have a maximum dc current rating of 2 A. This means the dc load current can have a maximum value of
   a. 1 A
   b. 2 A
   c. 4 A
   d. 8 A

19. What is the PIV across each diode of a bridge rectifier with a secondary voltage of 20 V rms?
   a. 14.1 V
   b. 20 V
   c. 28.3 V
   d. 34 V

20. If the secondary voltage increases in a bridge rectifier with a capacitor-input filter, the load voltage will
   a. Decrease
   b. Stay the same
   c. Increase
   d. None of these

21. If the filter capacitance is increased, the ripple will
   a. Decrease
   b. Stay the same
   c. Increase
   d. None of these

22. A circuit that removes positive or negative parts of a waveform is called a
   a. Clamper
   b. Clipper
   c. Diode clamp
   d. Limiter

23. A circuit that adds a positive or negative dc voltage to an input sine-wave is called a
   a. Clamper
   b. Clipper
   c. Diode clamp
   d. Limiter

24. For a clamper circuit to operate properly, its R_LC time constant should be
   a. Equal to the period T of the signal
   b. > 10 times the period T of the signal
   c. > 100 times the period T of the signal
   d. < 10 times the period T of the signal

25. Voltage multipliers are circuits best used to produce
   a. Low voltage and low current
   b. Low voltage and high current
   c. High voltage and low current
   d. High voltage and high current

Problems

SEC. 4-1 THE HALF-WAVE RECTIFIER

4-1 MultiSim What is the peak output voltage in Fig. 4-36*a* if the diode is ideal? The average value? The dc value? Sketch the output waveform.

Figure 4-36

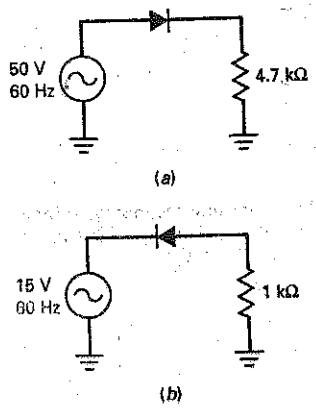

4-2 MultiSim Repeat the preceding problem for Fig. 4-36*b*.

4-3 MultiSim What is the peak output voltage in Fig. 4-36*a* using the second approximation of a diode? The average value? The dc value? Sketch the output waveform.

4-4 MultiSim Repeat the preceding problem for Fig. 4-36*b*.

SEC. 4-2 THE TRANSFORMER

4-5 If a transformer has a turns ratio of 6:1, what is the rms secondary voltage? The peak secondary voltage? Assume a primary voltage of 120 V rms.

4-6 If a transformer has a turns ratio of 1:12, what is the rms secondary voltage? The peak secondary voltage? Assume a primary voltage 120 V rms.

4-7 Calculate the peak output voltage and the dc output voltage in Fig. 4-37 using an ideal diode.

4-8 Calculate the peak output voltage and the dc output voltage in Fig. 4-37 using the second approximation.

Figure 4-37

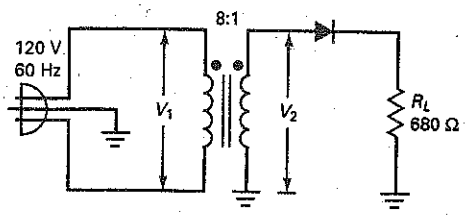

SEC. 4-3 THE FULL-WAVE RECTIFIER

4-9 A center-tapped transformer with 120 V input has a turns ratio of 4 : 1. What is the rms voltage across the upper half of the secondary winding? The peak voltage? What is the rms voltage across the lower half of the secondary winding?

4-10 MultiSim What is the peak output voltage in Fig. 4-38 if the diodes are ideal? The average value? The dc value? Sketch the output waveform.

4-11 MultiSim Repeat the preceding problem using the second approximation.

Figure 4-38

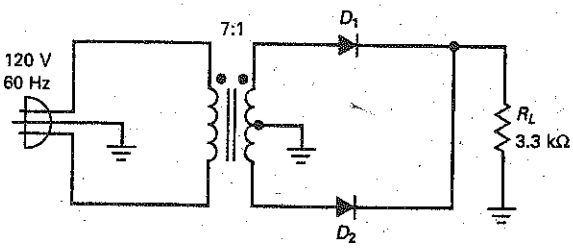

SEC. 4-4 THE BRIDGE RECTIFIER

4-12 MultiSim In Fig. 4-39, what is the peak output voltage if the diodes are ideal? The average value? The dc value? Sketch the output waveform.

4-13 MultiSim Repeat the preceding problem using the second approximation.

4-14 If the line voltage in Fig. 4-39 varies from 105 to 125 V rms, what is the minimum dc output voltage? The maximum?

SEC. 4-5 THE CHOKE-INPUT FILTER

4-15 A half-wave signal with a peak of 20 V is the input to a choke-input filter. If $X_L = 1\ k\Omega$ and $X_C = 25\ \Omega$, what is the approximate peak-to-peak ripple across the capacitor?

4-16 A full-wave signal with a peak of 14 V is the input to a choke-input filter. If $X_L = 2\ k\Omega$ and $X_C = 50\ \Omega$, what is the approximate peak-to-peak ripple across the capacitor?

SEC. 4-6 THE CAPACITOR-INPUT FILTER

4-17 What is the dc output voltage and ripple in Fig. 4-40*a*? Sketch the output waveform.

4-18 In Fig. 4-40*b*, calculate the dc output voltage and ripple.

4-19 What happens to the ripple in Fig. 4-40*a* if the capacitance value is reduced to half?

4-20 In Fig. 4-40*b*, what happens to the ripple if the resistance is reduced to 500 Ω?

4-21 What is the dc output voltage in Fig. 4-41? The ripple? Sketch the output waveform.

4-22 If the line voltage decreases to 105 V in Fig. 4-41, what is the dc output voltage?

SEC. 4-7 PEAK INVERSE VOLTAGE AND SURGE CURRENT

4-23 What is the peak inverse voltage in Fig. 4-41?

4-24 If the turns ratio changes to 3 : 1 in Fig. 4-41, what is the peak inverse voltage?

SEC. 4-8 OTHER POWER-SUPPLY TOPICS

4-25 An F-25X replaces the transformer of Fig. 4-41. What is the approximate peak voltage across the secondary winding? The approximate dc output voltage? Is the transformer being operated at its rated output current? Will the dc output voltage be higher or lower than normal?

4-26 What is the primary current in Fig. 4-41?

4-27 What is the average current through each diode in Fig. 4-40*a* and 4-40*b*?

4-28 What is the average current through each diode of Fig. 4-41?

Figure 4-39

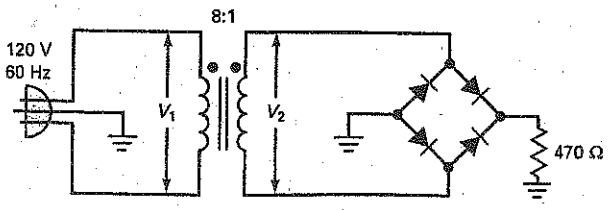

Figure 4-40

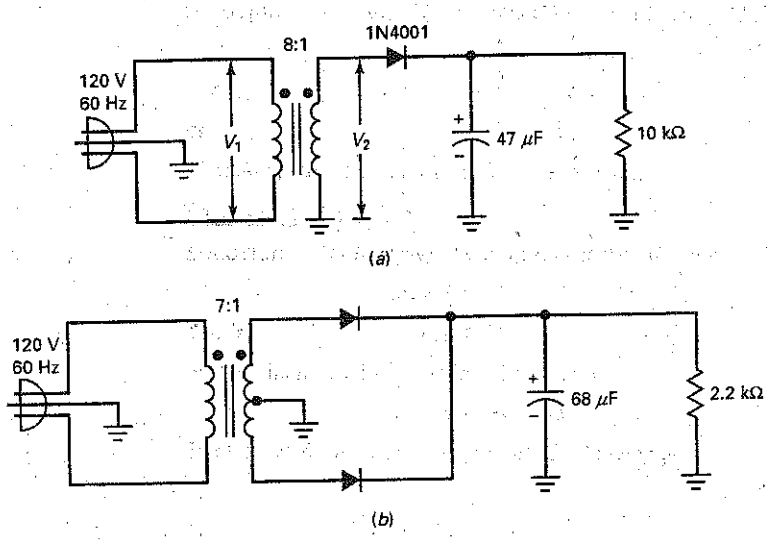

Figure 4-41

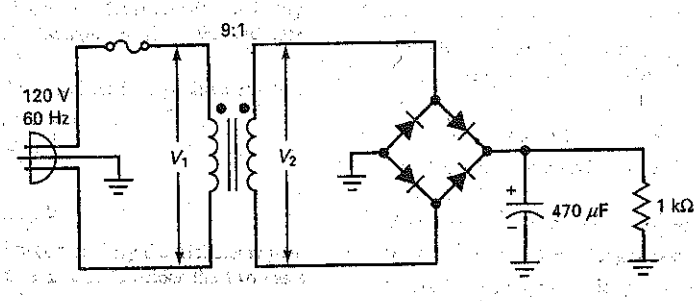

SEC. 4-9 TROUBLESHOOTING

4-29 If the filter capacitor in Fig. 4-41 is open, what is the dc output voltage?

4-30 If only one diode in Fig. 4-41 is open, what is the dc output voltage?

4-31 If somebody builds the circuit of Fig. 4-41 with the electrolytic capacitor reversed, what kind of trouble is likely to happen?

4-32 If the load resistance of Fig. 4-41 opens, what changes will occur in the output voltage?

SEC. 4-10 CLIPPERS AND LIMITERS

4-33 In Fig. 4-42*a*, sketch the output waveform. What is the maximum positive voltage? The maximum negative?

4-34 Repeat the preceding problem for Fig. 4-42*b*.

4-35 The diode clamp of Fig. 4-42*c* protects the sensitive circuit. What are the limiting levels?

4-36 In Fig. 4-42*d*, what is maximum positive output voltage? Maximum negative output voltage? Sketch the output waveform.

4-37 If the sine wave of Fig. 4-42*d* is only 20 mV, the circuit will act as a diode clamp instead of a biased clipper. In this case, what is the protected range of output voltage?

SEC. 4-11 CLAMPERS

4-38 In Fig. 4-43*a*, sketch the output waveform. What is the maximum positive voltage? The maximum negative?

4-39 Repeat the preceding problem for Fig. 4-43*b*.

4-40 Sketch the output waveform of the clamper and final output in Fig. 4-43*c*. What is the dc output voltage with ideal diodes? To a second approximation?

Figure 4-42

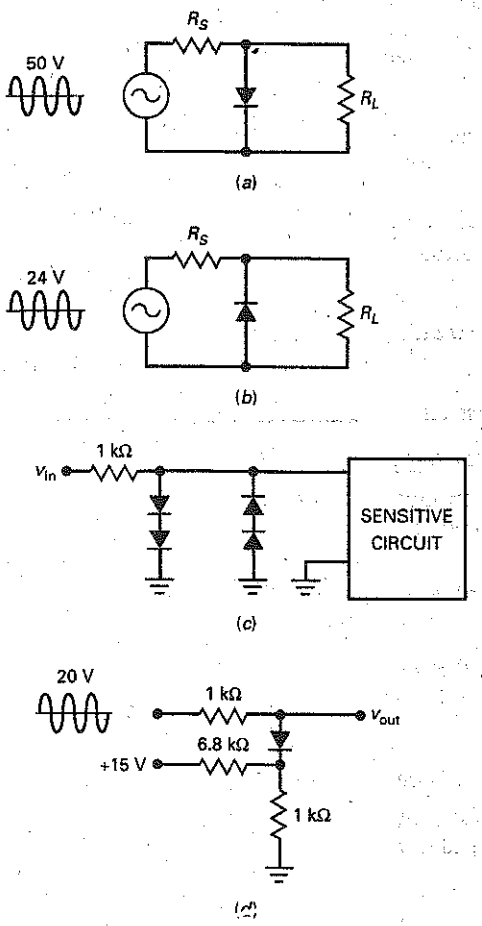

Figure 4-43

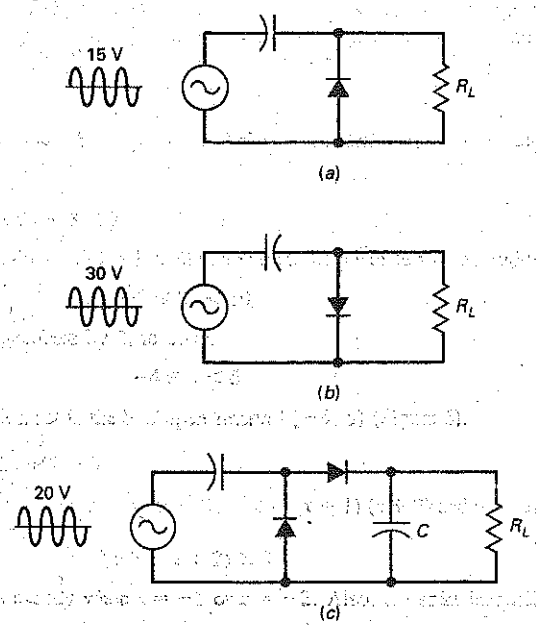

SEC. 4-12 VOLTAGE MULTIPLIERS

4-41 Calculate the dc output voltage in Fig. 4-44*a*.

4-42 What is the tripler output in Fig. 4-44*b*?

4-43 What is the quadrupler output in Fig. 4-44*c*?

Critical Thinking

4-44 If one of the diodes in Fig. 4-41 shorts, what will the probable result be?

4-45 The power supply of Fig. 4-45 has two output voltages. What are their approximate values?

4-46 A surge resistor of 4.7 Ω is added to Fig. 4-45. What is the maximum possible value of surge current?

4-47 A full-wave voltage has a peak value of 15 V. Somebody hands you a book of trigonometry tables, so that you can look up the value of a sine wave at intervals of 1°. Describe how you could prove that the average value of a full-wave signal is 63.6 percent of the peak value.

4-48 For the switch position shown in Fig. 4-46, what is the output voltage? If the switch is thrown to the other position, what is the output voltage?

4-49 If V_{in} is 40 V rms in Fig. 4-47 and the time constant *RC* is very large compared to the period of the source voltage, what does V_{out} equal? Why?

Figure 4-44

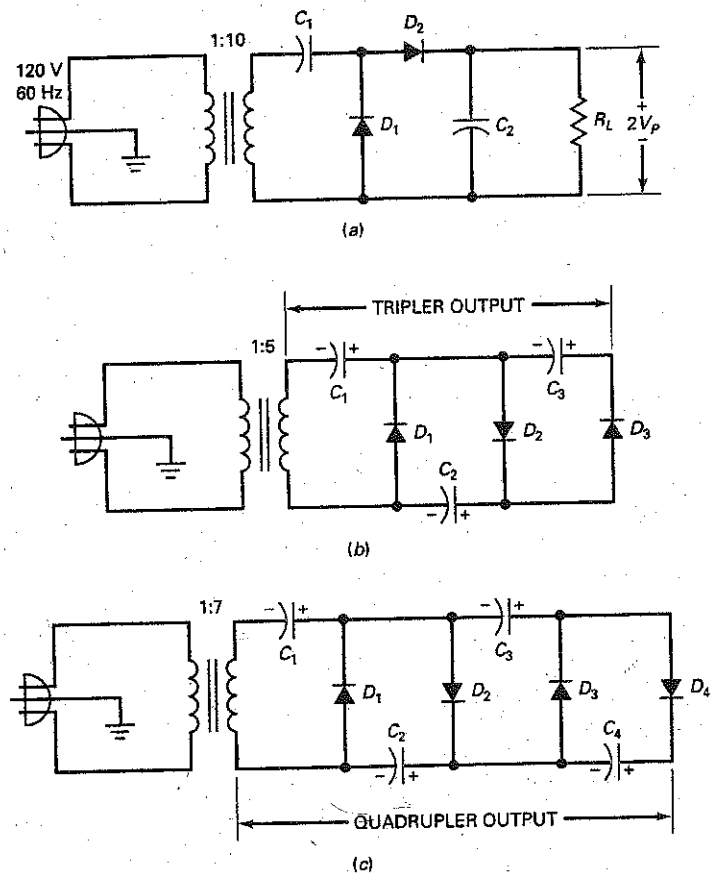

Figure 4-45

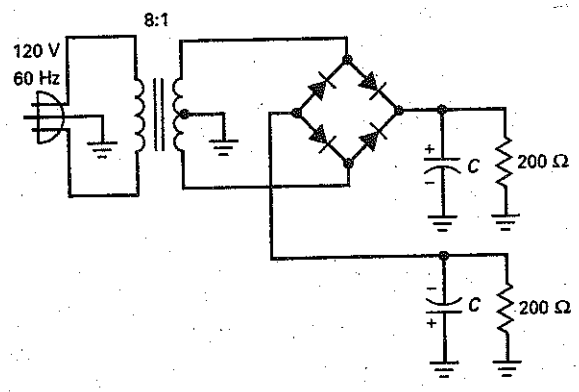

Figure 4-46

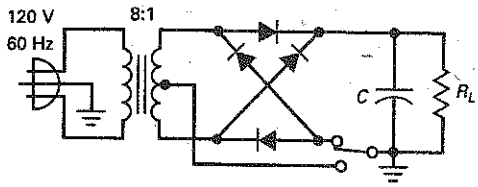

Figure 4-47

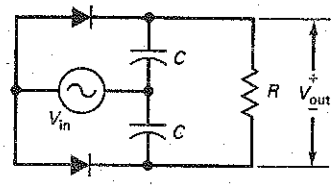

Troubleshooting

4-50 Figure 4-48 shows a bridge rectifier circuit with normal circuit values and eight troubles—T1–T8. Find all eight troubles.

Figure 4-48 Troubleshooting

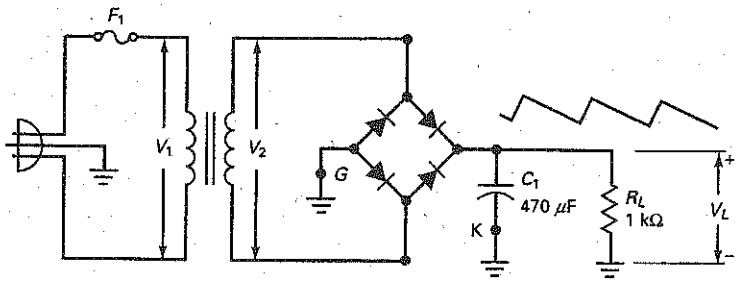

TROUBLESHOOTING

	V_1	V_2	V_L	V_R	f	R_L	C_1	F_1
ok	115	12.7	18	0.3	120	1k	ok	ok
T1	115	12.7	11.4	18	120	1k	∞	ok
T2	115	12.7	17.7	0.6	60	1k	ok	ok
T3	0	0	0	0	0	0	ok	∞
T4	115	12.7	0	0	0	1k	ok	ok
T5	0	0	0	0	0	1k	ok	∞
T6	115	12.7	18	0	0	∞	ok	ok
T7	115	0	0	0	0	1k	ok	ok
T8	0	0	0	0	0	1k	0	∞

Job Interview Questions

1. Here's a pencil and paper. Tell me how a bridge rectifier with a capacitor-input filter works. In your explanation, I expect to see a schematic diagram and waveforms at different points in the circuit.
2. Suppose there's a bridge rectifier with a capacitor-input filter on my lab bench. It's not working. Tell me how you would troubleshoot it. Indicate the kind of instruments you would use and how you would isolate common troubles.
3. Excessive current or voltage can destroy the diodes in a power supply. Draw a bridge rectifier with a capacitor-input filter and tell me how current or voltage can destroy a diode. Do the same for excessive reverse voltage.
4. Tell me everything you know about clippers, clampers, and diode clamps. Show me typical waveforms, clipping levels, clamping levels, and protection levels.
5. I want you to tell me how a peak-to-peak detector works. Then, I want you to tell me in what ways a voltage doubler is similar to a peak-to-peak detector and in what ways it differs from a peak-to-peak detector.
6. What is the advantage of using a bridge rectifier in a power supply as opposed to using a half-wave or a full-wave rectifier? Why is the bridge rectifier more efficient than the others?
7. In what power-supply application might I prefer to use an *LC*-type filter instead of the *RC*-type? Why?
8. What is the relationship between a half-wave rectifier and a full-wave rectifier?
9. Under what circumstances is it appropriate to use a voltage multiplier as part of a power supply?
10. A dc power supply is supposed to have an output of 5 V. You measure exactly 5 V out of this supply using a dc voltmeter. Is it possible for the power supply to still have a problem? If so, how would you troubleshoot it?
11. Why would I use a voltage multiplier instead of a transformer with a higher turns ratio and an ordinary rectifier?
12. List the advantages and disadvantages of the *RC* filter and *LC* filter.
13. While troubleshooting a power supply, you find a resistor burned black. A measurement shows that the resistor is open. Should you replace the resistor and turn the supply back on? If not, what should you do next?
14. For a bridge rectifier, list three possible faults and what the symptoms of each would be.

Self-Test Answers

1.	b	10.	d	19.	c
2.	a	11.	b	20.	c
3.	b	12.	b	21.	a
4.	c	13.	c	22.	b
5.	c	14.	a	23.	a
6.	b	15.	b	24.	c
7.	b	16.	a	25.	c
8.	c	17.	d		
9.	c	18.	c		

Practice Problem Answers

4-1 $V_{dc} = 6.53$ V

4-2 $V_{dc} = 27$ V

4-3 $V_{p(in)} = 12$ V;
$V_{p(out)} = 11.3$ V

4-5 $V_{p(out)}$ ideal = 34 V;
$2^{nd} = 32.6$ V

4-7 $V_L = 17$ V;
$V_R = 0.71$ Vpp

4-9 $V_R = 0.165$ Vpp

4-10 1N4002 or 1N4003 for safety factor of 2

chapter 5

Special-Purpose Diodes

Rectifier diodes are the most common type of diode. They are used in power supplies to convert ac voltage to dc voltage. But rectification is not all that a diode can do. Now we will discuss diodes used in other applications. The chapter begins with the zener diode, which is optimized for its breakdown properties. Zener diodes are very important because they are the key to voltage regulation. The chapter also covers optoelectronic diodes, Schottky diodes, varactors, and other diodes.

Objectives

After studying this chapter, you should be able to:

- Show how the zener diode is used and calculate various values related to its operation.
- List several optoelectronic devices and describe how each works.
- Recall two advantages Schottky diodes have over common diodes.
- Explain how a varactor works.
- State a primary use of the varistor.
- List four items of interest to the technician found on a zener diode data sheet.
- List and describe the basic function of other semiconductor diodes.

Chapter Outline

5-1 The Zener Diode

5-2 The Loaded Zener Regulator

5-3 Second Approximation of a Zener Diode

5-4 Zener Drop-Out Point

5-5 Reading a Data Sheet

5-6 Troubleshooting

5-7 Load Lines

5-8 Optoelectronic Devices

5-9 The Schottky Diode

5-10 The Varactor

5-11 Other Diodes

Vocabulary

back diode
common-anode
common-cathode
current-regulator diode
derating factor
laser diode
leakage region
light-emitting diode (LED)
negative resistance
optocoupler
optoelectronics
photodiode
PIN diode
preregulator
Schottky diode
seven-segment display
step-recovery diode
temperature coefficient
tunnel diode
varactor
varistor
zener diode
zener effect
zener regulator
zener resistance

5-1 The Zener Diode

Small-signal and rectifier diodes are never intentionally operated in the breakdown region because this may damage them. A **zener diode** is different; it is a silicon diode that the manufacturer has optimized for operation in the breakdown region. The zener diode is the backbone of voltage regulators, circuits that hold the load voltage almost constant despite large changes in line voltage and load resistance.

I-V Graph

Figure 5-1*a* shows the schematic symbol of a zener diode; Fig. 5-1*b* is an alternative symbol. In either symbol, the lines resemble a *z*, which stands for "zener." By varying the doping level of silicon diodes, a manufacturer can produce zener diodes with breakdown voltages from about 2 to over 1000 V. These diodes can operate in any of three regions: forward, leakage, and breakdown.

Figure 5-1*c* shows the *I-V* graph of a zener diode. In the forward region, it starts conducting around 0.7 V, just like an ordinary silicon diode. In the **leakage region** (between zero and breakdown), it has only a small reverse current. In a zener diode, the breakdown has a very sharp knee, followed by an almost vertical increase in current. Note that the voltage is almost constant, approximately equal to V_Z over most of the breakdown region. Data sheets usually specify the value of V_Z at a particular test current I_{ZT}.

Figure 5-1*c* also shows the maximum reverse current I_{ZM}. As long as the reverse current is less than I_{ZM}, the diode is operating within its safe range. If the current is greater than I_{ZM}, the diode will be destroyed. To prevent excessive reverse current, a *current-limiting resistor* must be used (discussed later).

GOOD TO KNOW

As with conventional diodes, the manufacturer places a band on the cathode end of the zener diode for terminal identification.

Zener Resistance

In the third approximation of a silicon diode, the forward voltage across a diode equals the knee voltage plus the additional voltage across the bulk resistance.

Figure 5-1 Zener diode. (*a*) Schematic symbol; (*b*) alternative symbol; (*c*) graph of current versus voltage; (*d*) typical zener diodes.

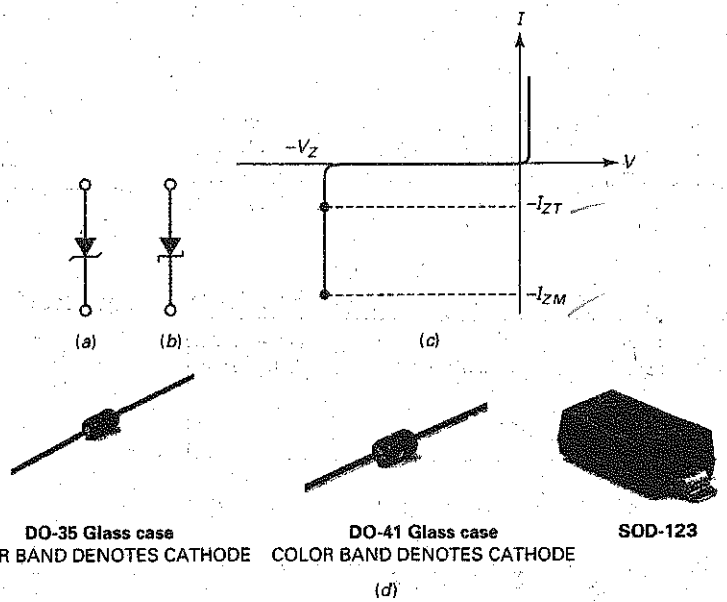

© Brian Moeskau/Brian Moeskau Photography © Brian Moeskau/Brian Moeskau Photography © Brian Moeskau/Brian Moeskau Photography

Similarly, in the breakdown region, the reverse voltage across a diode equals the breakdown voltage plus the additional voltage across the bulk resistance. In the reverse region, the bulk resistance is referred to as the **zener resistance**. This resistance equals the inverse of the slope in the breakdown region. In other words, the more vertical the breakdown region, the smaller the zener resistance.

In Fig. 5-1*c*, the zener resistance means that an increase in reverse current produces a slight increase in reverse voltage. The increase in voltage is very small, typically only a few tenths of a volt. This slight increase may be important in design work, but not in troubleshooting and preliminary analysis. Unless otherwise indicated, our discussions will ignore the zener resistance. Fig. 5-1(*d*) shows typical zener diodes.

Zener Regulator

A zener diode is sometimes called a *voltage-regulator diode* because it maintains a constant output voltage even though the current through it changes. For normal operation, you have to reverse bias the zener diode, as shown in Fig. 5-2*a*. Furthermore, to get breakdown operation, the source voltage V_S must be greater than the zener breakdown voltage V_Z. A series resistor R_S is always used to limit the zener current to less than its maximum current rating. Otherwise, the zener diode will burn out like any device with too much power dissipation.

Figure 5-2*b* shows an alternative way to draw the circuit with grounds. Whenever a circuit has grounds, you can measure voltages with respect to ground.

For instance, suppose you want to know the voltage across the series resistor of Fig. 5-2*b*. Here is the one way to find it when you have a built-up circuit. First, measure the voltage from the left end of R_S to ground. Second, measure the voltage from the right end of R_S to ground. Third, subtract the two voltages to get the voltage across R_S. If you have a floating VOM or DMM, you can connect directly across the series resistor.

Figure 5-2*c* shows the output of a power supply connected to a series resistor and a zener diode. This circuit is used when you want a dc output voltage that is less than the output of the power supply. A circuit like this is called a *zener voltage regulator*, or simply a **zener regulator.**

Ohm's Law Again

In Fig. 5-2, the voltage across the series or current-limiting resistor equals the difference between the source voltage and the zener voltage. Therefore, the current through the resistor is

$$I_S = \frac{V_S - V_Z}{R_S} \tag{5-1}$$

Figure 5-2 Zener regulator. (*a*) Basic circuit; (*b*) same circuit with grounds; (*c*) power supply drives regulator.

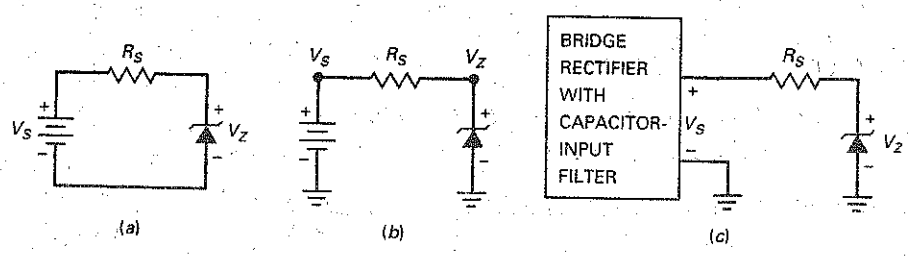

Figure 5-3 Ideal approximation of a zener diode.

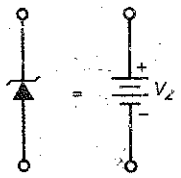

Once you have the value of series current, you also have the value of zener current. This is because Fig. 5-2 is a series circuit. Note that I_S must be less than I_{ZM}.

Ideal Zener Diode

For troubleshooting and preliminary analysis, we can approximate the breakdown region as vertical. Therefore, the voltage is constant even though the current changes, which is equivalent to ignoring the zener resistance. Figure 5-3 shows the ideal approximation of a zener diode. This means that a zener diode operating in the breakdown region ideally acts like a battery. In a circuit, it means that you can mentally replace a zener diode by a voltage source of V_Z, provided the zener diode is operating in the breakdown region.

Example 5-1

Suppose the zener diode of Fig. 5-4*a* has a breakdown voltage of 10 V. What are the minimum and maximum zener currents?

Figure 5-4 Example.

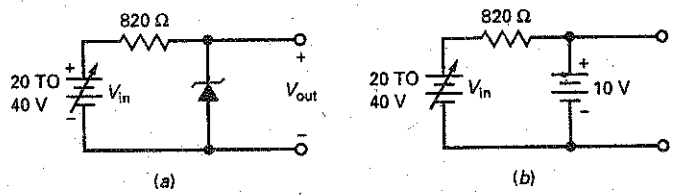

SOLUTION The applied voltage may vary from 20 to 40 V. Ideally, a zener diode acts like the battery shown in Fig. 5-4*b*. Therefore, the output voltage is 10 V for any source voltage between 20 and 40 V.

The minimum current occurs when the source voltage is minimum. Visualize 20 V on the left end of the resistor and 10 V on the right end. Then you can see that the voltage across the resistor is 20 V − 10 V, or 10 V. The rest is Ohm's law:

$$I_S = \frac{10\text{ V}}{820\ \Omega} = 12.2\text{ mA}$$

The maximum current occurs when the source voltage is 40 V. In this case, the voltage across the resistor is 30 V, which gives a current of

$$I_S = \frac{30\text{ V}}{820\ \Omega} = 36.6\text{ mA}$$

In a voltage regulator like Fig. 5-4*a*, the output voltage is held constant at 10 V, despite the change in source voltage from 20 to 40 V. The larger source voltage produces more zener current, but the output voltage holds rock-solid at 10 V. (If the zener resistance is included, the output voltage increases slightly when the source voltage increases.)

PRACTICE PROBLEM 5-1 Using Fig. 5-4, what is the zener current I_S if V_{in} = 30 V?

5-2 The Loaded Zener Regulator

Figure 5-5*a* shows a *loaded* zener regulator, and Fig. 5-5*b* shows the same circuit with grounds. The zener diode operates in the breakdown region and holds the load voltage constant. Even if the source voltage changes or the load resistance varies, the load voltage will remain fixed and equal to the zener voltage.

Breakdown Operation

How can you tell whether the zener diode of Fig. 5-5 is operating in the breakdown region? Because of the voltage divider, the Thevenin voltage facing the diode is:

$$V_{TH} = \frac{R_L}{R_S + R_L} V_S \tag{5-2}$$

This is the voltage that exists when the zener diode is disconnected from the circuit. This Thevenin voltage has to be greater than the zener voltage; otherwise, breakdown cannot occur.

Series Current

Unless otherwise indicated, in all subsequent discussions we assume that the zener diode is operating in the breakdown region. In Fig. 5-5, the current through the series resistor is given by:

$$I_S = \frac{V_S - V_Z}{R_S} \tag{5-3}$$

This is Ohm's law applied to the current-limiting resistor. It is the same whether or not there is a load resistor. In other words, if you disconnect the load resistor, the current through the series resistor still equals the voltage across the resistor divided by the resistance.

Load Current

Ideally, the load voltage equals the zener voltage because the load resistor is in parallel with the zener diode. As an equation:

$$V_L = V_Z \tag{5-4}$$

This allows us to use Ohm's law to calculate the load current:

$$I_L = \frac{V_L}{R_L} \tag{5-5}$$

Figure 5-5 Loaded zener regulator. (*a*) Basic circuit; (*b*) practical circuit.

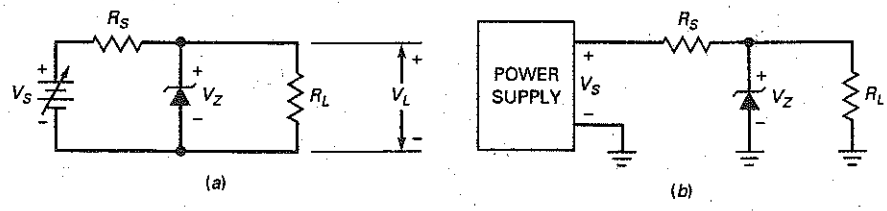

Zener Current

With Kirchhoff's current law:

$$I_S = I_Z + I_L$$

The zener diode and the load resistor are in parallel. The sum of their currents has to equal the total current, which is the same as the current through the series resistor.

We can rearrange the foregoing equation to get this important formula:

$$I_Z = I_S - I_L \tag{5-6}$$

This tells you that the zener current no longer equals the series current, as it does in an unloaded zener regulator. Because of the load resistor, the zener current now equals the series current minus the load current.

Table 5-1 summarizes the steps in the analysis of a loaded zener regulator. You start with the series current, followed by the load voltage and load current, and finally the zener current.

Zener Effect

When the breakdown voltage is greater than 6 V, the cause of the breakdown is the avalanche effect, discussed in Chap. 2. The basic idea is that minority carriers are accelerated to high enough speeds to dislodge other minority carriers, producing a chain or avalanche effect that results in a large reverse current.

The zener effect is different. When a diode is heavily doped, the depletion layer becomes very narrow. Because of this, the electric field across the depletion layer (voltage divided by distance) is very intense. When the field strength reaches approximately 300,000 V/cm, the field is intense enough to pull electrons out of their valence orbits. The creation of free electrons in this way is called the **zener effect** (also known as *high-field emission*). This is distinctly different from the avalanche effect, which depends on high-speed minority carriers dislodging valence electrons.

When the breakdown voltage is less than 4 V, only the zener effect occurs. When the breakdown voltage is greater than 6 V, only the avalanche effect occurs. When the breakdown voltage is between 4 and 6 V, both effects are present.

The zener effect was discovered before the avalanche effect, so all diodes used in the breakdown region came to be known as zener diodes. Although you may occasionally hear the term *avalanche diode*, the name *zener diode* is in general use for all breakdown diodes.

Table 5-1 Analyzing a Loaded Zener Regulator

	Process	Comment
Step 1	Calculate the series current, Eq. (5-3)	Apply Ohm's law to R_S
Step 2	Calculate the load voltage, Eq. (5-4)	Load voltage equals diode voltage
Step 3	Calculate the load current, Eq. (5-5)	Apply Ohm's law to R_L
Step 4	Calculate the zener current, Eq. (5-6)	Apply the current law to the diode

GOOD TO KNOW

For zener voltages between approximately 3 and 8 V, the temperature coefficient is also strongly affected by the reverse current in the diode. The temperature coefficient becomes more positive as current increases.

GOOD TO KNOW

In applications requiring a highly stable reference voltage, a zener diode is connected in series with one or more semiconductor diodes whose voltage drops change with temperature in the opposite direction that V_Z changes. The result is that V_Z remains *very* stable even though the temperature may vary over a wide range.

Temperature Coefficients

When the ambient temperature changes, the zener voltage will change slightly. On data sheets the effect of temperature is listed under the **temperature coefficient,** which is defined as the change in breakdown voltage per degree of increase. The temperature coefficient is negative for breakdown voltages less than 4 V (zener effect). For instance, a zener diode with a breakdown voltage of 3.9 V may have a temperature coefficient of −1.4 mV/°C. If temperature increases by 1°, the breakdown voltage decreases by 1.4 mV.

On the other hand, the temperature coefficient is positive for breakdown voltages greater than 6 V (avalanche effect). For instance, a zener diode with a breakdown voltage of 6.2 V may have a temperature coefficient of 2 mV/°C. If the temperature increases by 1°, the breakdown voltage increases by 2 mV.

Between 4 and 6 V, the temperature coefficient changes from negative to positive. In other words, there are zener diodes with breakdown voltages between 4 and 6 V in which the *temperature coefficient equals zero.* This is important in some applications when a solid zener voltage is needed over a large temperature range.

Example 5-2

MultiSim

Is the zener diode of Fig. 5-6*a* operating in the breakdown region?

Figure 5-6 Example.

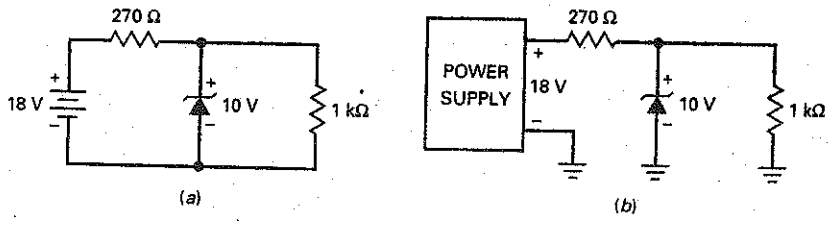

SOLUTION With Eq. (5-2):

$$V_{TH} = \frac{1\ \text{k}\Omega}{270\ \Omega + 1\ \text{k}\Omega}(18\ \text{V}) = 14.2\ \text{V}$$

Since this Thevenin voltage is greater than the zener voltage, the zener diode is operating in the breakdown region.

Example 5-3

MultiSim

What does the zener current equal in Fig. 5-6*b*?

SOLUTION You are given the voltage on both ends of the series resistor. Subtract the voltages, and you can see that 8 V is across the series resistor. Then Ohm's law gives:

$$I_S = \frac{8\ \text{V}}{270\ \Omega} = 29.6\ \text{mA}$$

Since the load voltage is 10 V, the load current is:

$$I_L = \frac{10\text{ V}}{1\text{ k}\Omega} = 10\text{ mA}$$

The zener current is the difference between the two currents:

$$I_Z = 29.6\text{ mA} - 10\text{ mA} = 19.6\text{ mA}$$

PRACTICE PROBLEM 5-3 Using Fig. 5-6*b*, change the power supply to 15 V and calculate I_S, I_L, and I_Z.

Example 5-4

MultiSim

What does the circuit of Fig. 5-7 do?

Figure 5-7 Example.

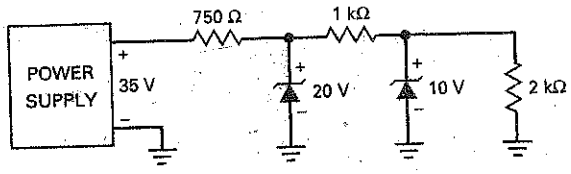

SOLUTION This is an example of a **preregulator** (the first zener diode) driving a zener regulator (the second zener diode). First, notice that the preregulator has an output voltage of 20 V. This is the input to the second zener regulator, whose output is 10 V. The basic idea is to provide the second regulator with a well-regulated input, so that the final output is extremely well regulated.

Example 5-5

MultiSim

What does the circuit of Fig. 5-8 do?

Figure 5-8 Zener diodes used for waveshaping.

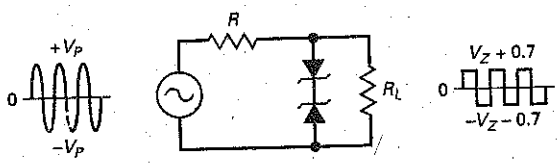

SOLUTION In most applications, zener diodes are used in voltage regulators where they remain in the breakdown region. But there are exceptions. Sometimes zener diodes are used in waveshaping circuits like Fig. 5-8.

Notice the back-to-back connection of two zener diodes. On the positive half cycle, the upper diode conducts and the lower diode breaks down. Therefore, the output is clipped as shown. The clipping level equals the zener voltage (broken-down diode) plus 0.7 V (forward-biased diode).

On the negative half cycle, the action is reversed. The lower diode conducts, and the upper diode breaks down. In this way, the output is almost a square wave. The larger the input sine wave, the better-looking the output square wave.

PRACTICE PROBLEM 5-5 In Fig. 5-8, the V_Z for each diode is 3.3 V. What would the voltage across R_L be?

Example 5-6

Briefly describe the circuit action for each of the circuits in Fig. 5-9.

Figure 5-9 Zener applications. (*a*) Producing nonstandard output voltages; (*b*) using a 6-V relay in a 12-V system; (*c*) using a 6-V capacitor in a 12-V system.

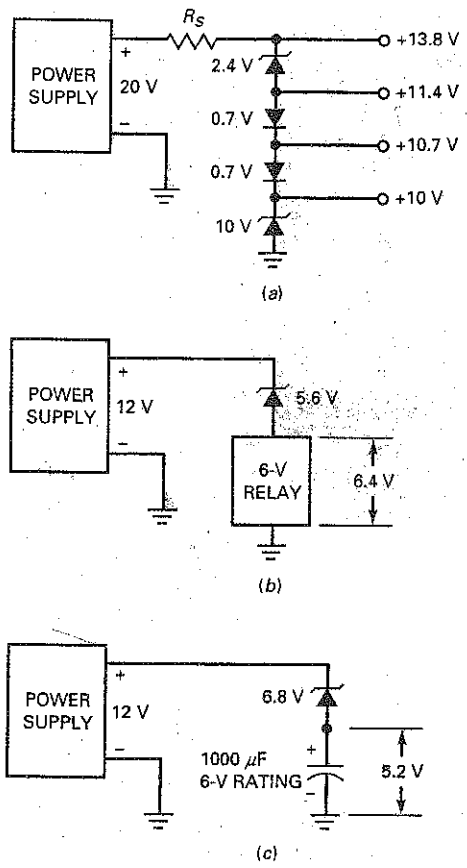

SOLUTION Figure 5-9*a* shows how zener diodes and ordinary silicon diodes can produce several dc output voltages, given a 20-V power supply. The bottom diode produces an output of 10 V. Each silicon diode is forward biased, producing outputs of 10.7 V and 11.4 V, as shown. The top diode has a breakdown voltage of 2.4 V, giving an output of 13.8 V. With other combinations of zener and silicon diodes, a circuit like this can produce different dc output voltages.

If you try to connect a 6-V relay to a 12-V system, you will probably damage the relay. It is necessary to drop some of the voltage. Figure 5-9*b* shows one way to do this. By connecting a 5.6-V zener diode in series with the relay, only 6.4 V appears across the relay, which is usually within the tolerance of the relay's voltage rating.

Large electrolytic capacitors often have small voltage ratings. For instance, an electrolytic capacitor of 1000 μF may have a voltage rating of only 6 V. This means that the maximum voltage across the capacitor should be less than 6 V. Figure 5-9*c* shows a workaround solution in which a 6-V electrolytic capacitor is used with a 12-V power supply. Again, the idea is to use a zener diode to drop some of the voltage. In this case, the zener diode drops 6.8 V, leaving only 5.2 V across the capacitor. This way, the electrolytic capacitor can filter the power supply and still remain with its voltage rating.

5-3 Second Approximation of a Zener Diode

Figure 5-10*a* shows the second approximation of a zener diode. A zener resistance is in series with an ideal battery. The total voltage across the zener diode equals the breakdown voltage plus the voltage drop across the zener resistance. Since R_Z is relatively small in a zener diode, it has only a minor effect on the total voltage across the zener diode.

GOOD TO KNOW

Zener diodes with breakdown voltages near 7 V have the smallest zener impedance.

Effect on Load Voltage

How can we calculate the effect of the zener resistance on the load voltage? Figure 5-10*b* shows a power supply driving a loaded zener regulator. Ideally, the load voltage equals the breakdown voltage V_Z. But in the second approximation, we include the zener resistance as shown in Fig. 5-10*c*. The additional voltage drop across R_Z will slightly increase the load voltage.

Since the zener current flows through the zener resistance in Fig. 5-10*c*, the load voltage is given by:

$$V_L = V_Z + I_Z R_Z$$

As you can see, the change in the load voltage from the ideal case is:

$$\Delta V_L = I_Z R_Z \tag{5-7}$$

Usually, R_Z is small, so the voltage change is small, typically in tenths of a volt. For instance, if $I_Z = 10$ mA and $R_Z = 10\ \Omega$, then $\Delta V_L = 0.1$ V.

Figure 5-10 Second approximation of a zener diode. (*a*) Equivalent circuit; (*b*) power supply drives zener regulator; (*c*) zener resistance included in analysis.

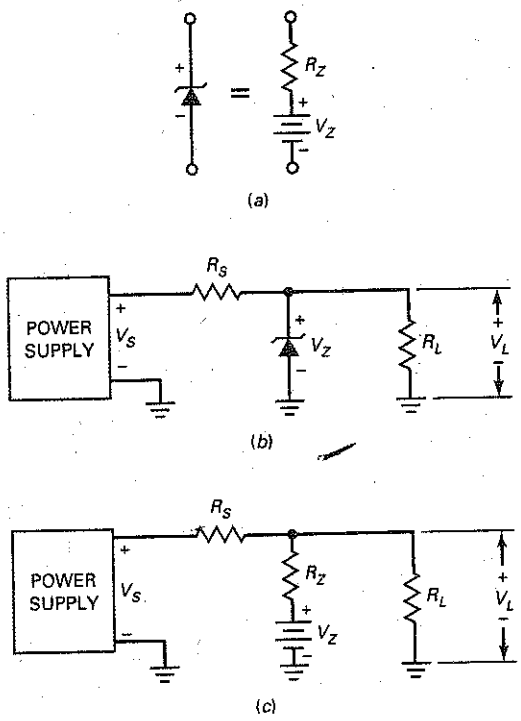

Figure 5-11 Zener regulator reduces ripple. (*a*) Complete ac equivalent circuit; (*b*) simplified ac equivalent circuit.

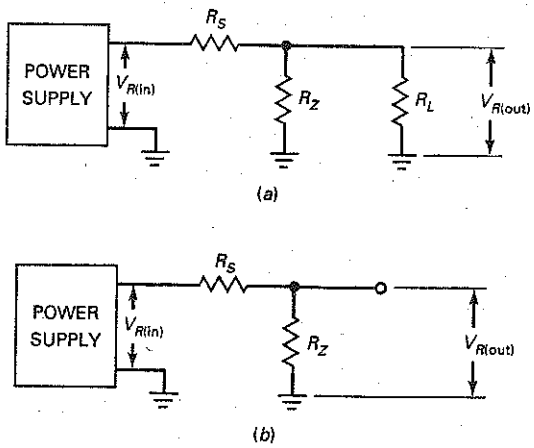

Effect on Ripple

As far as ripple is concerned, we can use the equivalent circuit shown in Fig. 5-11*a*. In other words, the only components that affect the ripple are the three resistances shown. We can simplify this even further. In a typical design, R_Z is much smaller than R_L. Therefore, the only two components that have a significant effect on ripple are the series resistance and zener resistance shown in Fig. 5-11*b*.

Since Fig. 5-11*b* is a voltage divider, we can write the following equation for the output ripple:

$$V_{R(out)} = \frac{R_Z}{R_S + R_Z} V_{R(in)}$$

Ripple calculations are not critical; that is, they don't have to be exact. Since R_S is always much greater than R_Z in a typical design, we can use this approximation for all troubleshooting and preliminary analysis:

$$V_{R(out)} \approx \frac{R_Z}{R_S} V_{R(in)} \tag{5-8}$$

Example 5-7

The zener diode of Fig. 5-12 has a breakdown voltage of 10 V and a zener resistance of 8.5 Ω. Use the second approximation to calculate the load voltage when the zener current is 20 mA.

Figure 5-12 Loaded zener regulator.

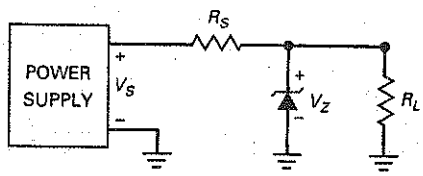

SOLUTION The change in load voltage equals the zener current times the zener resistance:

$$\Delta V_L = I_Z R_Z = (20\text{ mA})(8.5\ \Omega) = 0.17\text{ V}$$

To a second approximation, the load voltage is:

$$V_L = 10\text{ V} + 0.17\text{ V} = 10.17\text{ V}$$

PRACTICE PROBLEM 5-7 Use the second approximation to calculate the load voltage of Fig. 5-12 when $I_Z = 12$ mA.

Example 5-8

In Fig. 5-12, $R_S = 270\ \Omega$, $R_Z = 8.5\ \Omega$, and $V_{R(\text{in})} = 2$ V. What is the approximate ripple voltage across the load?

SOLUTION The load ripple approximately equals the ratio of R_Z to R_S, times the input ripple:

$$V_{R(\text{out})} \approx \frac{8.5\ \Omega}{270\ \Omega} 2\text{ V} = 63\text{ mV}$$

PRACTICE PROBLEM 5-8 Using Fig. 5-12, what is the approximate load ripple voltage if $V_{R(\text{in})} = 3$ V?

Example 5-9

The zener regulator of Fig. 5-13 has $V_Z = 10$ V, $R_S = 270\ \Omega$, and $R_Z = 8.5\ \Omega$, the same values used in Examples 5-7 and 5-8. Describe the measurements being made in this MultiSim circuit analysis.

MultiSim Figure 5-13 MultiSim analysis of ripple in zener regulator.

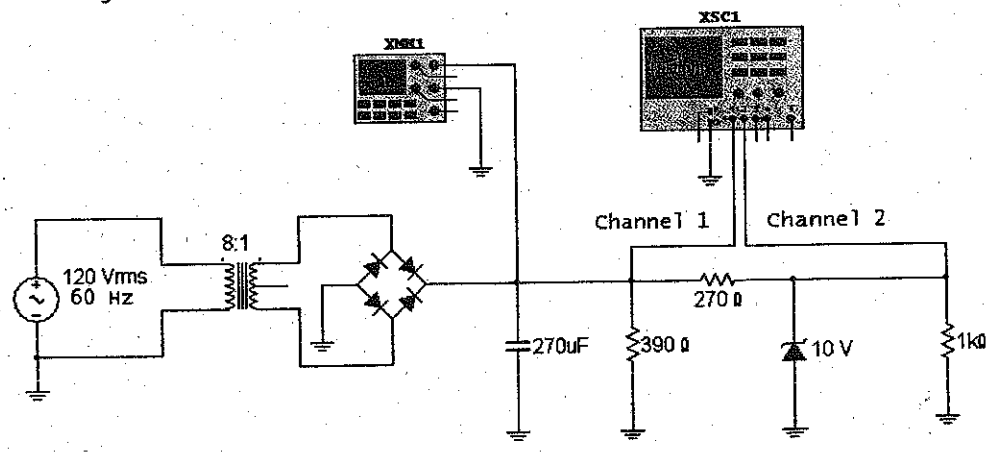

Figure 5-13 (continued)

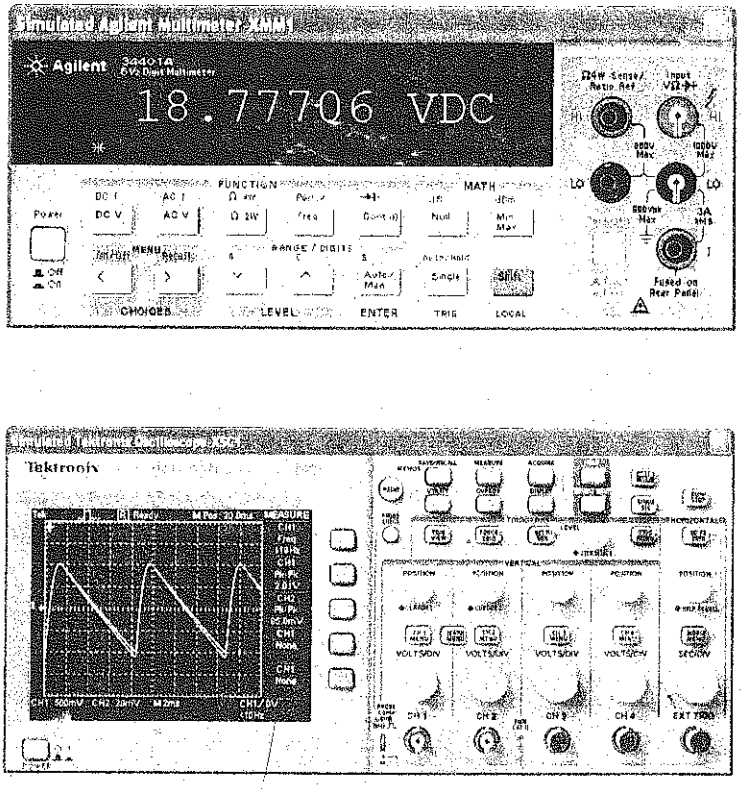

SOLUTION If we calculate the voltages in Fig. 5-13 using the methods discussed earlier, we will get the following results. With an 8:1 transformer, the peak secondary voltage is 21.2 V. Subtract two diode drops, and you get a peak of 19.8 V across the filter capacitor. The current through the 390-Ω resistor is 51 mA, and the current through R_S is 36 mA. The capacitor has to supply the sum of these two currents, which is 87 mA. With Eq. (4-10), this current results in a ripple across the capacitor of approximately 2.7 V pp. With this, we can calculate the ripple out of the zener regulator, which is approximately 85 mV pp.

Since the ripple is large, the voltage across the capacitor swings from a high of 19.8 V to a low of 17.1 V. If you average these two values, you get 18.5 V as the approximate dc voltage across the filter capacitor. This lower dc voltage means that the input and output ripple calculated earlier will also be lower. As discussed in the preceding chapter, calculations like these are only estimates because the exact analysis has to include higher-order effects.

Now, let us look at the MultiSim measurements, which are almost exact answers. The multimeter reads 18.78 V, very close to the estimated value of 18.5 V. Channel 1 of the oscilloscope shows the ripple across the capacitor. It is approximately 2 V pp, somewhat less than the estimated 2.7 V pp, but still in reasonable agreement. And finally, the output ripple of the zener regulator is approximately 85 mV pp (channel 2).

5-4 Zener Drop-Out Point

For a zener regulator to hold the output voltage constant, the zener diode must remain in the breakdown region under all operating conditions. This is equivalent to saying that there must be zener current for all source voltages and load currents.

Worst-Case Conditions

Figure 5-14*a* shows a zener regulator. It has the following currents:

$$I_S = \frac{V_S - V_Z}{R_S} = \frac{20\text{ V} - 10\text{ V}}{200\ \Omega} = 50\text{ mA}$$

$$I_L = \frac{V_L}{R_L} = \frac{10\text{ V}}{1\text{ k}\Omega} = 10\text{ mA}$$

and

$$I_Z = I_S - I_L = 50\text{ mA} - 10\text{ mA} = 40\text{ mA}$$

Now, consider what happens when the source voltage decreases from 20 to 12 V. In the foregoing calculations, you can see that I_S will decrease, I_L will remain the same, and I_Z will decrease. When V_S equals 12 V, I_S will equal 10 mA, and $I_Z = 0$. At this low source voltage, the zener diode is about to come out of the breakdown region. If the source decreases any further, regulation will be lost. In other words, the load voltage will become less than 10 V. Therefore, a low source voltage can cause the zener circuit to fail to regulate.

Another way to get a loss of regulation is by having too much load current. In Fig. 5-14*a*, consider what happens when the load resistance decreases from 1 kΩ to 200 Ω. When the load resistance is 200 Ω, the load current increases to 50 mA and the zener current decreases to zero. Again, the zener diode is about to come out of breakdown. Therefore, a zener circuit will fail to regulate if the load resistance is too low.

Finally, consider what happens when R_S increases from 200 Ω to 1 kΩ. In this case, the series current decreases from 50 to 10 mA. Therefore, a high series resistance can bring the circuit out of regulation.

Figure 5-14 Zener regulator. (*a*) Normal operation; (*b*) worst-case conditions at drop-out point.

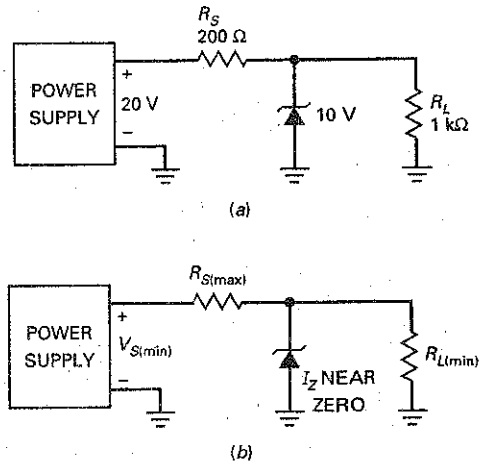

Figure 5-14*b* summarizes the foregoing ideas by showing the worst-case conditions. When the zener current is near zero, the zener regulation is approaching a drop-out or failure condition. By analyzing the circuit for these worst-case conditions, it is possible to derive the following equation:

$$R_{S(\max)} = \left(\frac{V_{S(\min)}}{V_Z} - 1\right) R_{L(\min)} \tag{5-9}$$

An alternative form of this equation is also useful:

$$R_{S(\max)} = \frac{V_{S(\min)} - V_Z}{I_{L(\max)}} \tag{5-10}$$

These two equations are useful because you can check a zener regulator to see whether it will fail under any operating conditions.

Example 5-10

A zener regulator has an input voltage that may vary from 22 to 30 V. If the regulated output voltage is 12 V and the load resistance varies from 140 Ω to 10 kΩ, what is the maximum allowable series resistance?

SOLUTION Use Eq. (5-9) to calculate the maximum series resistance as follows:

$$R_{S(\max)} = \left(\frac{22\text{ V}}{12\text{ V}} - 1\right) 140\ \Omega = 117\ \Omega$$

As long as the series resistance is less than 117 Ω, the zener regulator will work properly under all operating conditions.

PRACTICE PROBLEM 5-10 Using Example 5-10, what is the maximum allowable series resistance if the regulated output voltage is 15 V?

Example 5-11

A zener regulator has an input voltage ranging from 15 to 20 V and a load current ranging from 5 to 20 mA. If the zener voltage is 6.8 V, what is the maximum allowable series resistance?

SOLUTION Use Eq. (5-10) to calculate the maximum series resistance as follows:

$$R_{S(\max)} = \frac{15\text{ V} - 6.8\text{ V}}{20\text{ mA}} = 410\ \Omega$$

If the series resistance is less than 410 Ω, the zener regulator will work properly under all conditions.

PRACTICE PROBLEM 5-11 Repeat Example 5-11 using a zener voltage of 5.1 V.

5-5 Reading a Data Sheet

Figure 5-15 shows the data sheets for the 1N957B and 1N4728A series of zener diodes. Refer to these data sheets during the following discussion. Again, most of the information on a data sheet is for designers, but there are a few items that even troubleshooters and testers will want to know about.

Maximum Power

The power dissipation of a zener diode equals the product of its voltage and current:

$$P_Z = V_Z I_Z \tag{5-11}$$

For instance, if $V_Z = 12$ V and $I_Z = 10$ mA, then

$$P_Z = (12\text{ V})(10\text{ mA}) = 120\text{ mW}$$

As long as P_Z is less than the power rating, the zener diode can operate in the breakdown region without being destroyed. Commercially available zener diodes have power ratings from ¼ to more than 50 W.

For example, the data sheet for the 1N957B series lists a maximum power rating of 500 mW. A safe design includes a safety factor to keep the power dissipation well below this 500-mW maximum. As mentioned elsewhere, safety factors of 2 or more are used for conservative designs.

Maximum Current

Data sheets often include the *maximum current* a zener diode can handle without exceeding its power rating. I_{ZM} for a 1N961B is shown to be 32 mA. If this value is not listed, the maximum current can be found as follows:

$$I_{ZM} = \frac{P_{ZM}}{V_Z} \tag{5-12}$$

where I_{ZM} = maximum rated zener current
P_{ZM} = power rating
V_Z = zener voltage

For example, the 1N4742A has a zener voltage of 12 V and a 1 W power rating. Therefore, it has a maximum current rating of

$$I_{ZM} = \frac{1\text{ W}}{12\text{ V}} = 83.3\text{ mA}$$

If you satisfy the current rating, you automatically satisfy the power rating. For instance, if you keep the maximum zener current less than 83.3 mA, you are also keeping the maximum power dissipation less than 1 W. If you throw in the safety factor of 2, you don't have to worry about a marginal design blowing the diode.

Tolerance

Most zener diodes will have a suffix A, B, C, or D to identify the zener voltage tolerance. Because these suffix markings are not always consistent, be sure to identify any special notes included on the zener's data sheet that indicate that specific tolerance. For instance, the data sheet for the 1N4728A series shows its tolerance to equal ±5 percent while the 1N957B series also has a tolerance of ±5 percent. A suffix of C generally indicates ±2 percent, D ±1 percent, and no suffix ±20 percent.

Figure 5–15(*a*) Zener data sheets. (Copyright of Fairchild Semiconductor. Used by Permission).

FAIRCHILD SEMICONDUCTOR®

Zeners
1N957B - 1N991B

Absolute Maximum Ratings * T_A = 25°C unless otherwise noted

Symbol	Parameter	Value	Units
P_D	Power Dissipation @ TL ≤ 75°C, Lead Length = 3/8"	500	mW
	Derate above 75°C	4.0	mW/°C
T_J, T_{STG}	Operating and Storage Temperature Range	-65 to +200	°C

* These ratings are limiting values above which the serviceability of the diode may be impaired.

Tolerance = 5%

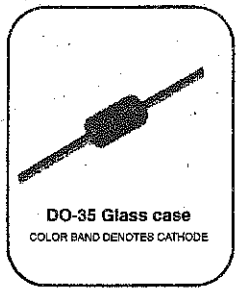

DO-35 Glass case
COLOR BAND DENOTES CATHODE

Electrical Characteristics T_A = 25°C unless otherwise noted

Device	V_Z (Volts) (Note 1)				Z_Z (Ω) (Note 2)			I_R @ V_R		I_{ZM} (mA) (Note 3)
	Min.	Typ.	Max.	@ I_Z (mA)	Z_Z @ I_Z	Z_{ZK} @ I_{ZK} Ω	Z_{ZK} @ I_{ZK} mA	μA	Volts	
1N957B	6.46	6.8	7.14	18.5	4.5	700	1.0	150	5.2	47
1N958B	7.125	7.5	7.875	16.5	5.5	700	0.5	75	*5.7	42
1N959B	7.79	8.2	8.61	15	6.5	700	0.5	50	6.2	38
1N960B	8.645	9.1	9.555	14	7.5	700	0.5	25	6.9	35
1N961B	9.5	10	10.5	12.5	8.5	700	0.25	10	7.6	32
1N962B	10.45	11	11.55	11.5	9.5	700	0.25	5	8.4	28
1N963B	11.4	12	12.6	10.5	11.5	700	0.25	5	9.1	26
1N964B	12.35	13	13.65	9.5	13	700	0.25	5	9.9	24
1N965B	14.25	15	15.75	8.5	16	700	0.25	5	11.4	21
1N966B	15.2	16	16.8	7.8	17	700	0.25	5	12.2	19
1N967B	17.1	18	18.9	7.0	21	750	0.25	5	13.7	17
1N968B	19	20	21	6.2	25	750	0.25	5	15.2	15
1N969B	20.9	22	23.1	5.6	29	750	0.25	5	16.7	14
1N970B	22.8	24	25.2	5.2	33	750	0.25	5	18.2	13
1N971B	25.652	27	28.35	4.6	41	750	0.25	5	20.6	11
1N972B	8.5	30	31.5	4.2	49	1000	0.25	5	22.8	10
1N973B	31.35	33	34.65	3.8	58	1000	0.25	5	25.1	9.2
1N974B	34.2	36	37.8	3.4	70	1000	0.25	5	27.4	8.5
1N975B	37.05	39	40.95	3.2	80	1000	0.25	5	29.7	7.8
1N976B	40.85	43	45.15	3.0	93	1500	0.25	5	32.7	7.0
1N977B	44.65	47	49.35	2.7	105	1500	0.25	5	35.8	6.4
1N978B	48.45	51	53.55	2.5	125	1500	0.25	5	38.8	5.9
1N979B	53.2	56	58.8	2.2	150	2000	0.25	5	42.6	5.4
1N980B	58.9	62	65.1	2.0	185	2000	0.25	5	47.1	4.9
1N981B	64.6	68	71.4	1.8	230	2000	0.25	5	51.7	4.5

Notes:
1. Zener Voltage (V_Z) Measurement
   Nominal zener voltage is measured with the device junction in the thermal equilibrium at the lead temperature (T_L) at 30°C ± 1°C and 3/8" lead length.
2. Zener Impedance (Z_Z) Derivation
   Z_{ZT} and Z_{ZK} are measured by dividing the ac voltage drop across the device by the ac current applied. The specified limits are for $I_{Z(ac)}$ = 0.1 $I_{Z(dc)}$ with the ac frequency = 60Hz.
3. Maximum Zener Current Ratings (I_{ZM})
   The maximum current handling capability on a worst case basis is limited by the actual zener voltage at the operation point and the power derating curve.

©2004 Fairchild Semiconductor Corporation

Figure 5-15(*b*) (continued)

FAIRCHILD SEMICONDUCTOR®

Zeners
1N4728A - 1N4764A

Absolute Maximum Ratings * T_A = 25°C unless otherwise noted

Symbol	Parameter	Value	Units
P_D	Power Dissipation @ TL ≤ 50°C, Lead Length = 3/8"	1.0	W
	Derate above 50°C	6.67	mW/°C
T_J, T_{STG}	Operating and Storage Temperature Range	-65 to +200	°C

* These ratings are limiting values above which the serviceability of the diode may be impaired.

Tolerance = 5%

DO-41 Glass case
COLOR BAND DENOTES CATHODE

Electrical Characteristics T_A = 25°C unless otherwise noted

Device	V_Z (V) @ I_Z (Note 1)			Test Current	Max. Zener Impedance			Leakage Current	
	Min.	Typ.	Max.	I_Z (mA)	Z_Z @ I_Z (Ω)	Z_{ZK} @ I_{ZK} (Ω)	I_{ZK} (mA)	I_R (μA)	V_R (V)
1N4728A	3.315	3.3	3.465	76	10	400	1	100	1
1N4729A	3.42	3.6	3.78	69	10	400	1	100	1
1N4730A	3.705	3.9	4.095	64	9	400	1	50	1
1N4731A	4.085	4.3	4.515	58	9	400	1	10	1
1N4732A	4.465	4.7	4.935	53	8	500	1	10	1
1N4733A	4.845	5.1	5.355	49	7	550	1	10	1
1N4734A	5.32	5.6	5.88	45	5	600	1	10	2
1N4735A	5.89	6.2	6.51	41	2	700	1	10	3
1N4736A	6.46	6.8	7.14	37	3.5	700	1	10	4
1N4737A	7.125	7.5	7.875	34	4	700	0.5	10	5
1N4738A	7.79	8.2	8.61	31	4.5	700	0.5	10	6
1N4739A	8.645	9.1	9.555	28	5	700	0.5	10	7
1N4740A	9.5	10	10.5	25	7	700	0.25	10	7.6
1N4741A	10.45	11	11.55	23	8	700	0.25	5	8.4
1N4742A	11.4	12	12.6	21	9	700	0.25	5	9.1
1N4743A	12.35	13	13.65	19	10	700	0.25	5	9.9
1N4744A	14.25	15	15.75	17	14	700	0.25	5	11.4
1N4745A	15.2	16	16.8	15.5	16	700	0.25	5	12.2
1N4746A	17.1	18	18.9	14	20	700	0.25	5	13.7
1N4747A	19	20	21	12.5	22	700	0.25	5	15.2
1N4748A	20.9	22	23.1	11.5	23	750	0.25	5	16.7
1N4749A	22.8	24	25.2	10.5	25	750	0.25	5	18.2
1N4750A	25.65	27	28.35	9.5	35	750	0.25	5	20.6
1N4751A	28.5	30	31.5	8.5	40	1000	0.25	5	22.8
1N4752A	31.35	33	34.65	7.5	45	1000	0.25	5	25.1
1N4753A	34.2	36	37.8	7	50	1000	0.25	5	27.4
1N4754A	37.05	39	40.95	6.5	60	1000	0.25	5	29.7
1N4755A	40.85	43	45.15	6	70	1500	0.25	5	32.7
1N4756A	44.65	47	49.35	5.5	80	1500	0.25	5	35.8
1N4757A	48.45	51	53.55	5	95	1500	0.25	5	38.8

©2004 Fairchild Semiconductor Corporation

Zener Resistance

The zener resistance (also called *zener impedance*) may be designated R_{ZT} or Z_{ZT}. For instance, the 1N961B has a zener resistance of 8.5 Ω measured at a test current of 12.5 mA. As long as the zener current is beyond the knee of the curve, you can use 8.5 Ω as the approximate value of the zener resistance. But note how the zener resistance increases at the knee of the curve (700 Ω). The point is this: Operation should be at or near the test current, if at all possible. Then you know that the zener resistance is relatively small.

The data sheet contains a lot of additional information, but it is primarily aimed at designers. If you do get involved in design work, then you have to read the data sheet carefully, including the notes that specify how quantities were measured.

Derating

The **derating factor** shown on a data sheet tells you how much you have to reduce the power rating of a device. For instance, the 1N4728A series has a power rating of 1 W for a lead temperature of 50°C. The derating factor is given as 6.67 mW/°C. This means that you have to subtract 6.67 mW for each degree above 50°C. Even though you may not be involved in design, you have to be aware of the effect of temperature. If it is known that the lead temperature will be above 50°C, the designer has to derate or reduce the power rating of the zener diode.

5-6 Troubleshooting

Figure 5-16 shows a zener regulator. When the circuit is working properly, the voltage between *A* and ground is +18 V, the voltage between *B* and ground is +10 V, and the voltage between *C* and ground is +10 V.

Unique Symptoms

Now, let's discuss what can go wrong with the circuit. When a circuit is not working as it should, a troubleshooter usually starts by measuring voltages. These voltage measurements give clues that help isolate the trouble. For instance, suppose these voltages are measured:

$$V_A = +18\text{ V} \qquad V_B = +10\text{ V} \qquad V_C = 0$$

Here is what may go through a troubleshooter's mind after measuring the foregoing voltages:

> ***What if the load resistor were open? No, the load voltage would still be 10 V. What if the load resistor were shorted? No, that would pull B and C down to ground, producing 0 V. All right, what if the connecting wire between B and C were open? Yes, that would do it.***

This trouble produces unique symptoms. The only way you can get this set of voltages is with an open connection between *B* and *C*.

Figure 5-16 Troubleshooting a zener regulator.

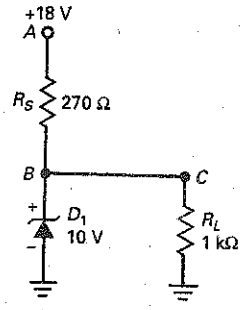

Ambiguous Symptoms

Not all troubles produce unique symptoms. Sometimes, two or more troubles produce the same set of voltages. Here is an example. Suppose the troubleshooter measures these voltages:

$$V_A = +18\text{ V} \qquad V_B = 0 \qquad V_C = 0$$

What do you think the trouble is? Think about this for a few minutes. When you have an answer, read what follows.

Here is a way that a troubleshooter might find the trouble. The thinking goes like this:

> *I've got voltage at A, but not at B and C. What if the series resistor were open? Then no voltage could reach B or C, but I would still measure 18 V between A and ground. Yes, the series resistor is probably open.*

At this point, the troubleshooter would disconnect the series resistor and measure its resistance with an ohmmeter. Chances are that it would be open. But suppose it measures OK. Then the troubleshooter's thinking continues like this:

> *That's strange. Well, is there any other way I can get 18 V at A and 0 V at B and C? What if the zener diode were shorted? What if the load resistor were shorted? What if a solder splash were between B or C and ground? Any of these will produce the symptoms I'm getting.*

Now the troubleshooter has more possible troubles to check out. Eventually, he or she will find the trouble.

When components burn out, they may become open, but not always. Some semiconductor devices can develop internal shorts, in which case they are like zero resistances. Other ways to get shorts include a solder splash between traces on a printed-circuit board, a solder ball touching two traces, and so on. Because of this, you must include what-if questions in terms of shorted components, as well as open components.

Table of Troubles

Table 5-2 shows the possible troubles for the zener regulator of Fig. 5-16. In working out the voltages, remember this: A shorted component is equivalent to a resistance of zero, and an open component is equivalent to a resistance of infinity. If you have trouble calculating with 0 and ∞, use 0.001 Ω and 1000 MΩ. In other words, use a very small resistance for a short and a very large resistance for an open.

In Fig. 5-16, the series resistor R_S may be shorted or open. Let us designate these troubles as R_{SS} and R_{SO}. Similarly, the zener diode may be shorted or open, symbolized by D_{1S} and D_{1O}. Also the load resistor may be shorted or open, R_{LS} and R_{LO}. Finally, the connecting wire between B and C may be open, designated BC_O.

Table 5-2 Zener Regulator Troubles and Symptoms

Trouble	V_A, V	V_B, V	V_C, V	Comments
None	18	10	10	No trouble.
R_{SS}	18	18	18	D_1 and R_L may be open.
R_{SO}	18	0	0	
D_{1S}	18	0	0	R_S may be open.
D_{1O}	18	14.2	14.2	
R_{LS}	18	0	0	R_S may be open.
R_{LO}	18	10	10	
BC_O	18	10	0	
No supply	0	0	0	Check power supply.

In Table 5-2, the second row shows the voltages when the trouble is R_{SS}, a shorted series resistor. When the series resistor is shorted in Fig. 5-16, 18 V appears at B and C. This destroys the zener diode and possibly the load resistor. For this trouble, a voltmeter measures 18 V at points A, B, and C. This trouble and its voltages are shown in Table 5-2.

If the series resistor were open in Fig. 5-16, the voltage could not reach point B. In this case, B and C would have zero voltage, as shown in Table 5-2. Continuing like this, we can get the remaining entries of Table 5-2.

In Table 5-2, the comments indicate troubles that might occur as a direct result of the original short circuits. For instance, a shorted R_S will destroy the zener diode and may also open the load resistor. It depends on the power rating of the load resistor. A shorted R_S means that there's 18 V across 1 kΩ. This produces a power of 0.324 W. If the load resistor is rated at only 0.25 W, it may open.

Some of the troubles in Table 5-2 produce unique voltages, and others produce ambiguous voltages. For instance, the voltages for R_{SS}, D_{1O}, BC_O, and No supply are unique. If you measure these unique voltages, you can identify the trouble without breaking into the circuit to make an ohmmeter measurement.

On the other hand, all the other troubles in Table 5-2 produce ambiguous voltages. This means that two or more troubles can produce the same set of voltages. If you measure a set of ambiguous voltages, you will need to break into the circuit and measure the resistance of the suspected components. For instance, suppose you measure 18 V at A, 0 V at B, and 0 V at C. The troubles that can produce these voltages are R_{SO}, D_{1S}, and R_{LS}.

Zener diodes can be tested in a variety of ways. A DMM, set to the diode range, will enable the diode to be tested for being open or shorted. A normal reading will be approximately 0.7 V in the forward-biased direction and an open (overrange) indication in the reverse-biased direction. This test, though, will not indicate if the zener diode has the proper breakdown voltage V_Z.

A semiconductor curve tracer, shown in Fig. 5-17, will accurately display the zener's forward/reverse-biased characteristics. If a curve tracer is not available, a simple test is to measure the voltage drop across the zener diode while connected in a circuit. The voltage drop should be close to its rated value.

Figure 5-17 Curve Tracer.

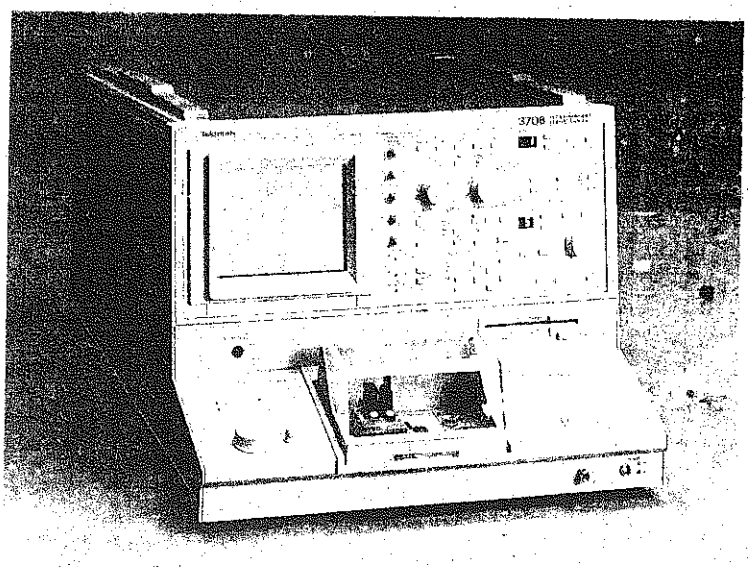

© Tektronix, Inc. Reprinted with permission. All rights reserved.

Figure 5-18 (*a*) Zener regulator circuit; (*b*) load lines.

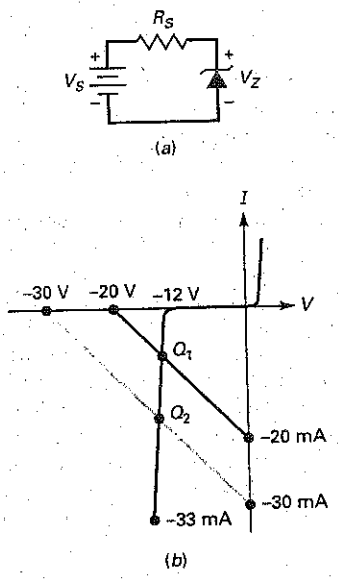

5-7 Load Lines

The current through the zener diode of Fig. 5-18*a* is given by

$$I_Z = \frac{V_S - V_Z}{R_S}$$

Suppose $V_S = 20$ V and $R_S = 1$ kΩ. Then the foregoing equation reduces to:

$$I_Z = \frac{20 - V_Z}{1000}$$

We get the saturation point (vertical intercept) by setting V_Z equal to zero and solving for I_Z to get 20 mA. Similarly, to get the cutoff point (horizontal intercept), we set I_Z equal to zero and solve for V_Z to get 20 V.

Alternatively, you can get the ends of the load line as follows. Visualize Fig. 5-18*a* with $V_S = 20$ V and $R_S = 1$ kΩ. With the zener diode shorted, the maximum diode current is 20 mA. With the diode open, the maximum diode voltage is 20 V.

Suppose the zener diode has a breakdown voltage of 12 V. Then its graph appears as shown in Fig. 5-18*b*. When we plot the load line for $V_S = 20$ V and $R_S = 1$ kΩ, we get the upper load line with an intersection point of Q_1. The voltage across the zener diode will be slightly more than the knee voltage at breakdown because the curve slopes slightly.

To understand how voltage regulation works, assume that the source voltage changes to 30 V. Then the zener current changes to:

$$I_Z = \frac{30 - V_Z}{1000}$$

This implies that the ends of the load line are 30 mA and 30 V, as shown in Fig. 5-18*b*. The new intersection is at Q_2. Compare Q_2 with Q_1, and you can see that there is more current through the zener diode, but approximately the same zener voltage. Therefore, even though the source voltage has changed from 20 to 30 V, the zener voltage is still approximately equal to 12 V. This is the basic idea of voltage regulation; the output voltage has remained almost constant even though the input voltage has changed by a large amount.

5-8 Optoelectronic Devices

Optoelectronics is the technology that combines optics and electronics. This field includes many devices based on the action of a *pn* junction. Examples of optoelectronic devices are **light-emitting diodes (LEDs)**, photodiodes, optocouplers, and laser diodes. Our discussion begins with the LED.

Light-Emitting Diode

Figure 5-19*a* shows a source connected to a resistor and an LED. The outward arrows symbolize the radiated light. In a forward-biased LED, free electrons cross the junction and fall into holes. As these electrons fall from a higher to a lower energy level, they radiate energy. In ordinary diodes, this energy is radiated in the form of heat. But in an LED, the energy is radiated as light. LEDs made from different elements have the ability to radiate energy across a wide wavelength spectrum. LEDs have replaced incandescent lamps in many applications because of their low voltage, long life, and fast on-off switching.

Figure 5-19 LED indicator. (*a*) Basic circuit; (*b*) practical circuit; (*c*) typical LEDs.

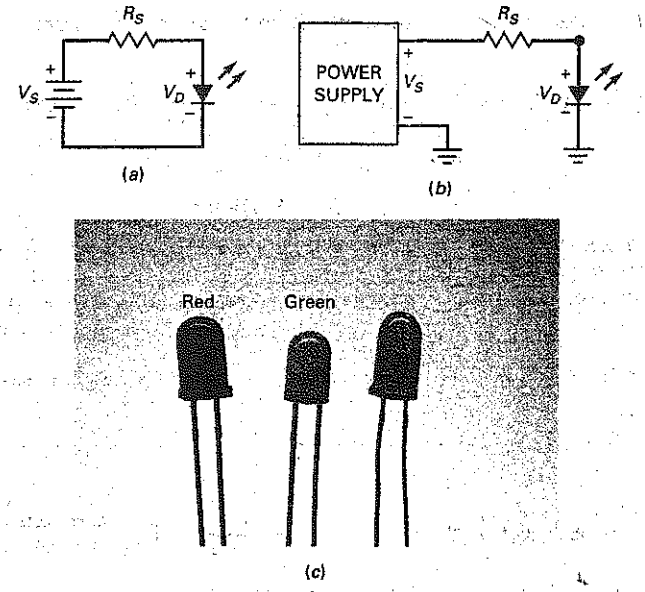

By using elements like gallium, arsenic, and phosphorus, a manufacturer can produce LEDs that radiate red, green, yellow, blue, orange, or infrared (invisible). LEDs that produce visible radiation are useful with instruments, calculators, and so on. The infrared LED finds applications in burglar alarm systems, remote controls, CD players, and other devices requiring invisible radiation.

LED Voltage and Current

The resistor of Fig. 5-19*b* is the usual current-limiting resistor that prevents the current from exceeding the maximum current rating of the diode. Since the resistor has a node voltage of V_S on the left and a node voltage of V_D on the right, the voltage across the resistor is the difference between the two voltages. With Ohm's law, the series current is:

$$I_S = \frac{V_S - V_D}{R_S} \tag{5-13}$$

For most commercially available LEDs, the typical voltage drop is from 1.5 to 2.5 V for currents between 10 and 50 mA. The exact voltage drop depends on the LED current, color, tolerance, and so on. Unless otherwise specified, we will use a nominal drop of 2 V when troubleshooting or analyzing the LED circuits in this book. Fig. 5-19*c* shows typical LEDs.

LED Brightness

The brightness of an LED depends on the current. When V_S is much greater than V_D in Eq. (5-13), the brightness of the LED is approximately constant. For instance, a TIL222 is a green LED with a forward voltage of between 1.8 (minimum) and 3 V (maximum), for a current of 25 mA. If a circuit like Fig. 5-19*b* is mass-produced using a TIL222, the brightness of the LED will be almost constant if V_S is much greater than V_D. If V_S is only slightly more than V_D, the LED brightness will vary noticeably from one circuit to the next.

The best way to control the brightness is by driving the LED with a current source. This way, the brightness is constant because the current is constant. When we discuss transistors (they act like current sources), we will show how to use a transistor to drive an LED.

Breakdown Voltage

LEDs have very low breakdown voltages, typically between 3 and 5 V. Because of this, they are easily destroyed if reverse biased with too much voltage. When troubleshooting an LED circuit in which the LED will not light, check the polarity of the LED connection to make sure that it is forward biased.

An LED is often used to indicate the presence of power-line voltage into equipment. In this case, a rectifier diode may be used in parallel with the LED to prevent reverse-bias destruction of the LED. An example of using a rectifier diode to protect an LED is given later.

Seven-Segment Display

Figure 5-20*a* shows a **seven-segment display.** It contains seven rectangular LEDs (*A* through *G*). Each LED is called a *segment* because it forms part of the character being displayed. Figure 5-20*b* is a schematic diagram of the seven-segment display. External series resistors are included to limit the currents to safe levels. By grounding one or more resistors, we can form any digit from 0 through 9. For instance, by grounding *A*, *B*, and *C*, we get a 7. Grounding *A*, *B*, *C*, *D*, and *G* produces a 3.

A seven-segment display can also display capital letters *A*, *C*, *E*, and *F*, plus lowercase letters *b* and *d*. Microprocessor trainers often use seven-segment displays that show all digits from 0 through 9, plus *A*, *b*, *C*, *d*, *E*, and *F*.

The seven-segment indicator of Fig. 5-20*b* is referred to as the **common-anode** type because all anodes are connected together. Also available is the **common-cathode** type, in which all cathodes are connected together.

GOOD TO KNOW

The principal disadvantage of LEDs is that they draw considerable current in comparison to other types of visual displays. In many cases, LEDs are pulsed on and off at a rapid rate, rather than being supplied with a steady drive current. LEDs appear to the eye to be on continuously, but they consume less power than if they were on continuously.

Photodiode

As previously discussed, one component of reverse current in a diode is the flow of minority carriers. These carriers exist because thermal energy keeps dislodging valence electrons from their orbits, producing free electrons and holes in the process. The lifetime of the minority carriers is short, but while they exist, they can contribute to the reverse current.

When light energy bombards a *pn* junction, it can dislodge valence electrons. The more light striking the junction, the larger the reverse current in a diode. A **photodiode** has been optimized for its sensitivity to light. In this diode, a window lets light pass through the package to the junction. The incoming light

Figure 5-20 Seven-segment indicator. (*a*) Physical layout of segments; (*b*) schematic diagram.

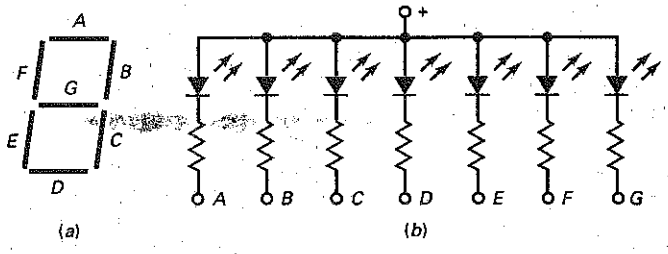

Figure 5-21 Incoming light increases reverse current in photodiode.

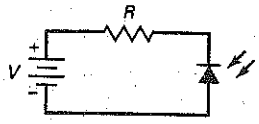

produces free electrons and holes. The stronger the light, the greater the number of minority carriers and the larger the reverse current.

Figure 5-21 shows the schematic symbol of a photodiode. The arrows represent the incoming light. Especially important, the source and the series resistor reverse bias the photodiode. As the light becomes brighter, the reverse current increases. With typical photodiodes, the reverse current is in the tens of microamperes.

Optocoupler

An optocoupler (also called an *optoisolator*) combines an LED and a photodiode in a single package. Figure 5-22 shows an optocoupler. It has an LED on the input side and a photodiode on the output side. The left source voltage and the series resistor set up a current through the LED. Then the light from the LED hits the photodiode, and this sets up a reverse current in the output circuit. This reverse current produces a voltage across the output resistor. The output voltage then equals the output supply voltage minus the voltage across the resistor.

When the input voltage is varying, the amount of light is fluctuating. This means that the output voltage is varying in step with the input voltage. This is why the combination of an LED and a photodiode is called an **optocoupler.** The device can couple an input signal to the output circuit. Other types of optocouplers use phototransistors, photothyristors, and other photo devices in their output circuit side. These devices will be discussed in later chapters.

The key advantage of an optocoupler is the electrical isolation between the input and output circuits. With an optocoupler, the only contact between the input and the output is a beam of light. Because of this, it is possible to have an insulation resistance between the two circuits in the thousands of megohms. Isolation like this is useful in high-voltage applications in which the potentials of the two circuits may differ by several thousand volts.

GOOD TO KNOW

An important specification for the optocoupler is its current/transfer ratio, which is the ratio of the device's output (photodiode or phototransistor) current to its input (LED) current.

Laser Diode

In an LED, free electrons radiate light when falling from higher energy levels to lower ones. The free electrons fall randomly and continuously, resulting in light waves that have every phase between 0 and 360°. Light that has many different phases is called *noncoherent light.* An LED produces noncoherent light.

A **laser diode** is different. It produces a *coherent light.* This means that all the light waves are *in phase with each other.* The basic idea of a laser diode is to use a mirrored resonant chamber that reinforces the emission of light waves at a single frequency of the same phase. Because of the resonance, a laser diode produces a narrow beam of light that is very intense, focused, and pure.

Laser diodes are also known as *semiconductor lasers.* These diodes can produce visible light (red, green, or blue) and invisible light (infrared). Laser diodes are used in a large variety of applications. They are used in telecommunications, data communications, broadband access, industrial, aerospace, test and measurement, medical and defense industries. They are also used in laser printers and consumer products requiring large-capacity optical disk systems, such as

Figure 5-22 Optocoupler combines an LED and a photodiode.

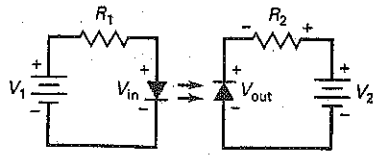

compact disk (CD) and digital video disk (DVD) players. In broadband communication, they are used with fiber-optic cables to increase the speed of the Internet.

A *fiber-optic cable* is analogous to a stranded wire cable, except that the strands are thin flexible fibers of glass or plastic that transmit light beams instead of free electrons. The advantage is that much more information can be sent through a fiber-optic cable than through a copper cable.

New applications are being found as the lasing wavelength is pushed lower into the visible spectrum with visible laser diodes (VLDs). Also, near-infrared diodes are being used in machine vision systems, sensors, and security systems.

Example 5-12

Figure 5-23*a* shows a voltage-polarity tester. It can be used to test a dc voltage of unknown polarity. When the dc voltage is positive, the green LED lights up. When the dc voltage is negative, the red LED lights up. What is the approximate LED current if the dc input voltage is 50 V and the series resistance is 2.2 kΩ?

Figure 5-23 (*a*) Polarity indicator; (*b*) continuity tester.

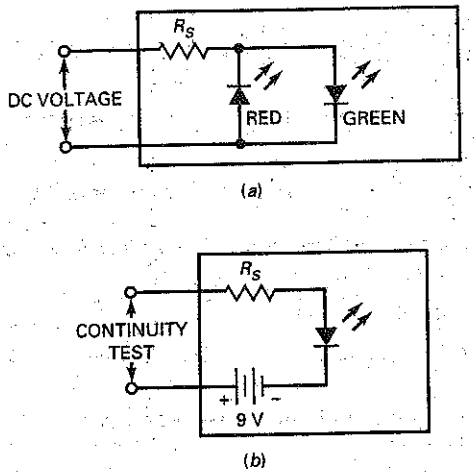

SOLUTION We will use a forward voltage of approximately 2 V for either LED. With Eq. (5-13):

$$I_S = \frac{50\text{ V} - 2\text{ V}}{2.2\text{ k}\Omega} = 21.8\text{ mA}$$

Example 5-13

MultiSim

Figure 5-23*b* is a continuity tester. After you turn off all the power in a circuit under test, you can use this circuit to check for the continuity of cables, connectors, and switches. How much LED current is there if the series resistance is 470 Ω?

SOLUTION When the input terminals are shorted (continuity), the internal 9-V battery produces an LED current of:

$$I_S = \frac{9\text{ V} - 2\text{ V}}{470\ \Omega} = 14.9\text{ mA}$$

PRACTICE PROBLEM 5-13 Using Fig. 5-23, what value series resistor should be used to produce 21 mA of LED current?

Example 5-14

LEDs are often used to indicate the existence of ac voltages. Figure 5-24 shows an ac voltage source driving an LED indicator. When there is ac voltage, there is LED current on the positive half cycles. On the negative half cycles, the rectifier diode turns on and protects the LED from too much reverse voltage. If the ac source voltage is 20 V rms and the series resistance is 680 Ω, what is the average LED current? Also, calculate the approximate power dissipation in the series resistor.

Figure 5-24 Low ac voltage indicator.

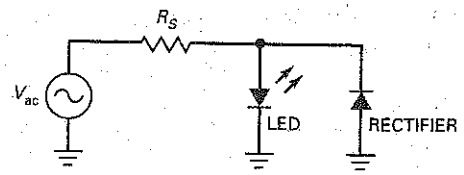

SOLUTION The LED current is a rectified half-wave signal. The peak source voltage is 1.414 × 20 V, which is approximately 28 V. Ignoring the LED voltage drop, the approximate peak current is:

$$I_S = \frac{28\text{ V}}{680\ \Omega} = 41.2\text{ mA}$$

The average of the half-wave current through the LED is:

$$I_S = \frac{41.2\text{ mA}}{\pi} = 13.1\text{ mA}$$

Ignore the diode drops in Fig. 5-24; this is equivalent to saying that there is a short to ground on the right end of the series resistor. Then the power dissipation in the series resistor equals the square of the source voltage divided by the resistance:

$$P = \frac{(20\text{ V})^2}{680\ \Omega} = 0.588\text{ W}$$

As the source voltage in Fig. 5-24 increases, the power dissipation in the series resistor may increase to several watts. This is a disadvantage because a high-wattage resistor is too bulky and wasteful for most applications.

PRACTICE PROBLEM 5-14 If the ac input voltage of Fig. 5-24 is 120 V and the series resistance is 2 kΩ, find the average LED current and approximate series resistor power dissipation.

Example 5-15

The circuit of Fig. 5-25 shows an LED indicator for the ac power line. The idea is basically the same as in Fig. 5-24, except that we use a capacitor instead of a resistor. If the capacitance is 0.68 μF, what is the average LED current?

Figure 5-25 High ac voltage indicator.

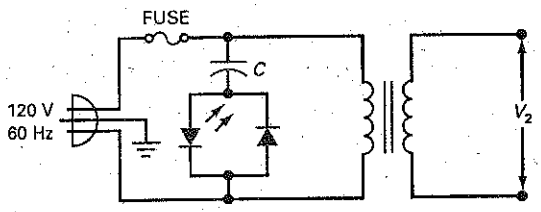

SOLUTION Calculate the capacitive reactance:

$$X_C = \frac{1}{2\pi fC} = \frac{1}{2\pi(60\text{ Hz})(0.68\ \mu\text{F})} = 3.9\text{ k}\Omega$$

Ignoring the LED voltage drop, the approximate peak LED current is:

$$I_S = \frac{170\text{ V}}{3.9\text{ k}\Omega} = 43.6\text{ mA}$$

The average LED current is:

$$I_S = \frac{43.6\text{ mA}}{\pi} = 13.9\text{ mA}$$

What advantage does a series capacitor have over a series resistor? Since the voltage and current in a capacitor are 90° out of phase, there is no power dissipation in the capacitor. If a 3.9-kΩ resistor were used instead of a capacitor, it would have a power dissipation of approximately 3.69 W. Most designers would prefer to use a capacitor, since it's smaller and ideally produces no heat.

Example 5-16

What does the circuit of Fig. 5-26 do?

Figure 5-26 Blown-fuse indicator.

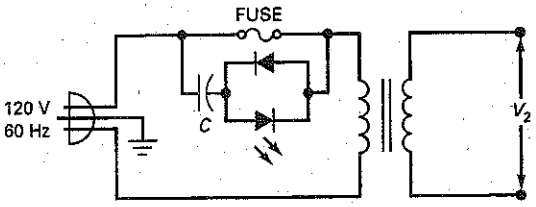

SOLUTION This is a *blown-fuse indicator.* If the fuse is OK, the LED is off because there is approximately zero voltage across the LED indicator. On the other hand, if the fuse is open, some of the line voltage appears across the LED indicator and the LED lights up.

GOOD TO KNOW

Schottky diodes are relatively high-current devices, capable of switching quickly while providing forward currents in the neighborhood of 50 A! It is also worth noting that Schottky diodes normally have lower breakdown voltage ratings as compared to conventional *pn* junction rectifier diodes.

5-9 The Schottky Diode

As frequency increases, the action of small-signal rectifier diodes begins to deteriorate. They are no longer able to switch off fast enough to produce a well-defined half-wave signal. The solution to this problem is the *Schottky diode*. Before describing this special-purpose diode, let us look at the problem that arises with ordinary small-signal diodes.

Charge Storage

Figure 5-27*a* shows a small-signal diode, and Fig. 5-27*b* illustrates its energy bands. As you can see, conduction-band electrons have diffused across the junction and traveled into the *p* region before recombining (path *A*). Similarly, holes have crossed the junction and traveled into the *n* region before recombination occurs (path *B*). The greater the lifetime, the farther the charges can travel before recombination occurs.

For instance, if the lifetime equals 1 μs, free electrons and holes exist for an average of 1 μs before recombination takes place. This allows the free electrons to penetrate deeply into the *p* region, where they remain temporarily stored at the higher energy band. Similarly, the holes penetrate deeply into the *n* region, where they are temporarily stored in the lower energy band.

The greater the forward current, the larger the number of charges that have crossed the junction. The greater the lifetime, the deeper the penetration of these charges and the longer the charges remain in the high and low energy bands. The temporary storage of free electrons in the upper energy band and holes in the lower energy band is referred to as *charge storage*.

Charge Storage Produces Reverse Current

When you try to switch a diode from on to off, charge storage creates a problem. Why? Because if you suddenly reverse-bias a diode, the stored charges will flow in the reverse direction for a while. The greater the lifetime, the longer these charges can contribute to reverse current.

For example, suppose a forward-biased diode is suddenly reverse-biased, as shown in Fig. 5-28*a*. Then a large reverse current can exist for a while because of the flow of stored charges in Fig. 5-28*b*. Until the stored charges either cross the junction or recombine, the reverse current will continue.

Figure 5-27 Charge storage. (*a*) Forward bias creates stored charges; (*b*) stored charges in high- and low-energy bands.

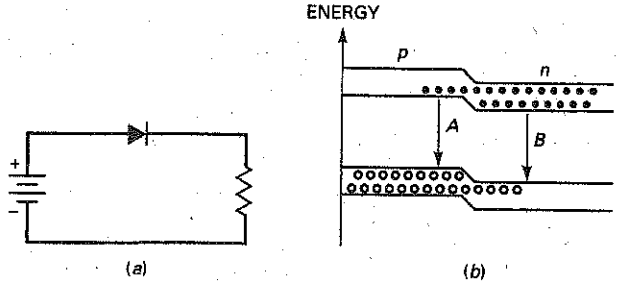

Figure 5-28 Stored charges allow a brief reverse current. (*a*) Sudden reversal of source voltage; (*b*) flow of stored charges in reverse direction.

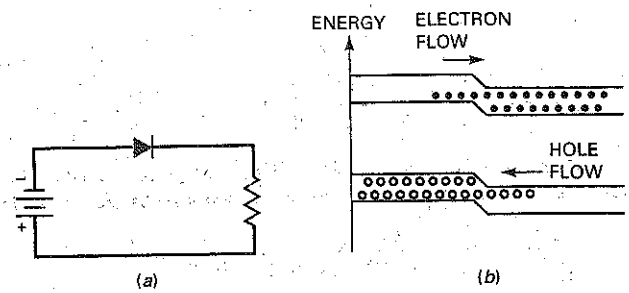

Reverse Recovery Time

The time it takes to turn off a forward-biased diode is called the *reverse recovery time* t_{rr}. The conditions for measuring t_{rr} vary from one manufacturer to the next. As a guide, t_{rr} is the time it takes for the reverse current to drop to 10 percent of the forward current.

For instance, the 1N4148 has a t_{rr} of 4 ns. If this diode has a forward current of 10 mA and it is suddenly reverse-biased, it will take approximately 4 ns for the reverse current to decrease to 1 mA. Reverse recovery time is so short in small-signal diodes that you don't even notice its effect at frequencies below 10 MHz or so. It's only when you get well above 10 MHz that you have to take t_{rr} into account.

Poor Rectification at High Frequencies

What effect does reverse recovery time have on rectification? Take a look at the half-wave rectifier shown in Fig. 5-29*a*. At low frequencies the output is a half-wave rectified signal. As the frequency increases well into megahertz, however, the output signal begins to deviate from the half-wave shape, as shown in Fig. 5-29*b*. Some reverse conduction (called *tails*) is noticeable near the beginning of the reverse half cycle.

The problem is that the reverse recovery time has become a significant part of the period, allowing conduction during the early part of the negative half cycle. For instance, if $t_{rr} = 4$ ns and the period is 50 ns, the early part of the reverse half cycle will have tails similar to those shown in Fig. 5-29*b*. As the frequency continues to increase, the rectifier becomes useless.

Figure 5-29 Stored charges degrade rectifier behavior at high frequencies. (*a*) Rectifier circuit with ordinary small-signal diode; (*b*) tails appear on negative half cycles at higher frequencies.

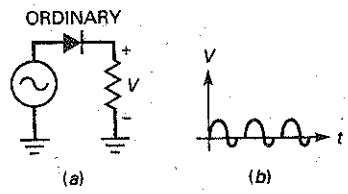

Eliminating Charge Storage

The solution to the problem of tails is a special-purpose device called a **Schottky diode.** This kind of diode uses a metal such as gold, silver, or platinum on one side of the junction and doped silicon (typically *n*-type) on the other side. Because of the metal on one side of the junction, the Schottky diode has no depletion layer. The lack of a depletion layer means that there are *no stored charges at the junction.*

When a Schottky diode is unbiased, free electrons on the *n* side are in smaller orbits than are the free electrons on the metal side. This difference in orbit size is called the *Schottky barrier,* approximately 0.25 V. When the diode is forward biased, free electrons on the *n* side can gain enough energy to travel in larger orbits. Because of this, free electrons can cross the junction and enter the metal, producing a large forward current. Since the metal has no holes, there is no charge storage and no reverse recovery time.

Hot-Carrier Diode

The Schottky diode is sometimes called a *hot-carrier diode.* This name came about as follows. Forward bias increases the energy of the electrons on the *n* side to a higher level than that of the electrons on the metal side of the junction. This increase in energy inspired the name *hot carrier* for the *n*-side electrons. As soon as these high-energy electrons cross the junction, they fall into the metal, which has a lower-energy conduction band.

High-Speed Turnoff

The lack of charge storage means that the Schottky diode can switch off faster than an ordinary diode can. In fact, a Schottky diode can easily rectify frequencies above 300 MHz. When it is used in a circuit like Fig. 5-30*a*, the Schottky diode produces a perfect half-wave signal like Fig. 5-30*b* even at frequencies above 300 MHz.

Figure 5-30*a* shows the schematic symbol of a Schottky diode. Notice the cathode side. The lines look like a rectangular *S*, which stands for *Schottky.* This is how you can remember the schematic symbol.

Applications

The most important application of Schottky diodes is in digital computers. The speed of computers depends on how fast their diodes and transistors can turn on and off. This is where the Schottky diode comes in. Because it has no charge storage, the Schottky diode has become the backbone of low-power Schottky TTLs, a group of widely used digital devices.

A final point. Since a Schottky diode has a barrier potential of only 0.25 V, you may occasionally see it used in low-voltage bridge rectifiers because you subtract only 0.25 V instead of the usual 0.7 V for each diode when using the second approximation. In a low-voltage supply, this lower diode voltage drop is an advantage.

Figure 5-30 Schottky diodes eliminate tails at high frequencies. (*a*) Circuit with Schottky diode; (*b*) half-wave signal at 300 MHz.

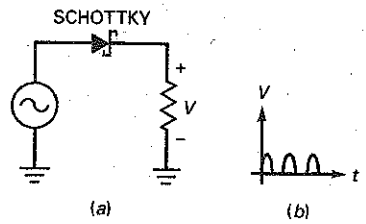

Figure 5-31 Varactor. (*a*) Doped regions are like capacitor plates separated by a dielectric; (*b*) ac equivalent circuit; (*c*) schematic symbol; (*d*) graph of capacitance versus reverse voltage.

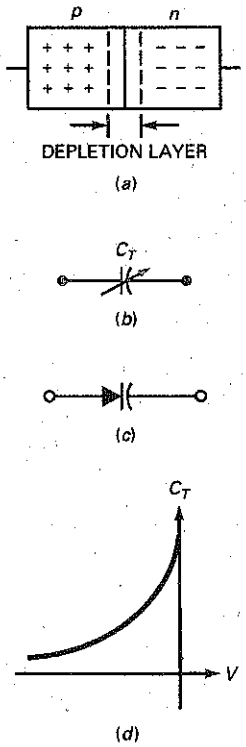

5-10 The Varactor

The **varactor** (also called the *voltage-variable capacitance, varicap, epicap,* and *tuning diode*) is widely used in television receivers, FM receivers, and other communications equipment because it can be used for electronic tuning.

Basic Idea

In Fig. 5-31*a*, the depletion layer is between the *p* region and the *n* region. The *p* and *n* regions are like the plates of a capacitor, and the depletion layer is like the dielectric. When a diode is reverse-biased, the width of the depletion layer increases with the reverse voltage. Since the depletion layer gets wider with more reverse voltage, the capacitance becomes smaller. It's as though you moved apart the plates of a capacitor. The key idea is that capacitance is controlled by reverse voltage.

Equivalent Circuit and Symbol

Figure 5-31*b* shows the ac equivalent circuit for a reverse-biased diode. In other words, as far as an ac signal is concerned, the varactor acts the same as a variable capacitance. Figure 5-31*c* shows the schematic symbol for a varactor. The inclusion of a capacitor in series with the diode is a reminder that a varactor is a device that has been optimized for its variable-capacitance properties.

Capacitance Decreases at Higher Reverse Voltages

Figure 5-31*d* shows how the capacitance varies with reverse voltage. This graph shows that the capacitance gets smaller when the reverse voltage gets larger. The really important idea here is that reverse dc voltage controls capacitance.

How is a varactor used? It is connected in parallel with an inductor to form a parallel resonant circuit. This circuit has only one frequency at which maximum impedance occurs. This frequency is called the *resonant frequency*. If the dc reverse voltage to the varactor is changed, the resonant frequency is also changed. This is the principle behind electronic tuning of a radio station, a TV channel, and so on.

Varactor Characteristics

Because the capacitance is voltage-controlled, varactors have replaced mechanically tuned capacitors in many applications such as television receivers and automobile radios. Data sheets for varactors list a reference value of capacitance measured at a specific reverse voltage, typically −3 V to −4 V. Figure 5-32 shows a partial data sheet for a MV209 varactor diode. It lists a reference capacitance C_t of 29 pF at −3 V.

In addition to providing the reference value of capacitance, data sheets normally list a capacitance ratio, C_R, or tuning range associated with a voltage range. For example, along with the reference value of 29 pF, the data sheet of a MV209 shows a minimum capacitance ratio of 5:1 for a voltage range of −3 V to −25 V. This means that the capacitance, or tuning range, decreases from 29 to 6 pF when the voltage varies from −3 V to −25 V.

The tuning range of a varactor depends on the doping level. For instance, Fig. 5-33*a* shows the doping profile for an abrupt-junction diode (the ordinary type of diode). The profile shows that the doping is uniform on both sides of the junction. The tuning range of an abrupt-junction diode is between 3:1 and 4:1.

Figure 5-32 MV209 Partial Data Sheet. (Copyright of Semiconductor Components Industries, LLC. Used by Permission.)

	C_t, Diode Capacitance V_R = 3.0 Vdc, f = 1.0 MHz pF			Q, Figure of Merit V_R = 3.0 Vdc f = 50 MHz	C_R, Capacitance Ratio C_3/C_{25} f = 1.0 MHz (Note 1)	
Device	Min	Nom	Max	Min	Min	Max
MMBV109LT1, MV209	26	29	32	200	5.0	6.5

1. C_R is the ratio of C_t measured at 3 Vdc divided by C_t measured at 25 Vdc.

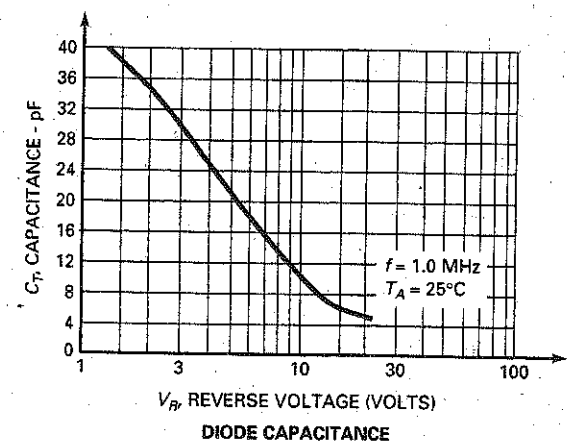

Figure 5-33 Doping profiles. (*a*) Abrupt junction; (*b*) hyperabrupt junction.

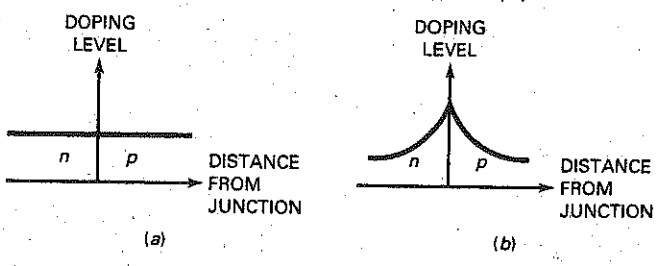

To get larger tuning ranges, some varactors have a *hyperabrupt junction*, one whose doping profile looks like Fig. 5-33*b*. This profile tells us that the doping level increases as we approach the junction. The heavier doping produces a narrower depletion layer and a larger capacitance. Furthermore, changes in reverse voltage have more pronounced effects on capacitance. A hyperabrupt varactor has a tuning range of about 10:1, enough to tune an AM radio through its frequency range of 535 to 1605 kHz. (Note: You need a 10:1 range because the resonant frequency is inversely proportional to the square root of capacitance.)

Example 5-17

What does the circuit of Fig. 5-34*a* do?

SOLUTION As mentioned in Chap. 1, a transistor is a semiconductor device that acts like a current source. In Fig. 5-34*a*, the transistor pumps a fixed number of milliamperes into the resonant *LC* tank circuit. A negative dc voltage reverse-biases the varactor. By varying this dc control voltage, we can vary the resonant frequency of the *LC* circuit.

As far as the ac signal is concerned, we can use the equivalent circuit shown in Fig. 5-34*b*. The coupling capacitor acts like a short circuit. An ac current source drives a resonant *LC* tank circuit. The varactor acts like variable capacitance, which means that we can change the resonant frequency by changing the dc control voltage. This is the basic idea behind the tuning of radio and television receivers.

Figure 5-34 Varactors can tune resonant circuits. (*a*) Transistor (current source) drives tuned *LC* tank; (*b*) ac equivalent circuit.

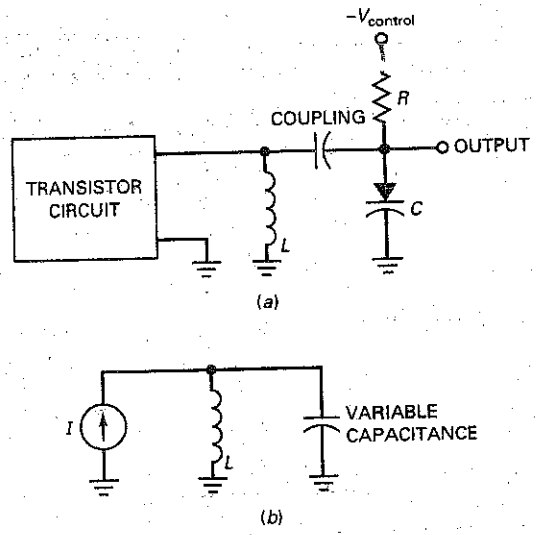

5-11 Other Diodes

Besides the special-purpose diodes discussed so far, there are others you should know about. Because they are so specialized, only a brief description follows.

Varistors

Lightning, power-line faults, and transients can pollute the ac line voltage by superimposing dips and spikes on the normal 120 V rms. *Dips* are severe voltage drops lasting microseconds or less. *Spikes* are very brief overvoltages up to 2000 V

Figure 5-35 (*a*) Varistor protects primary from ac line transients; (*b*) current-regulator diode.

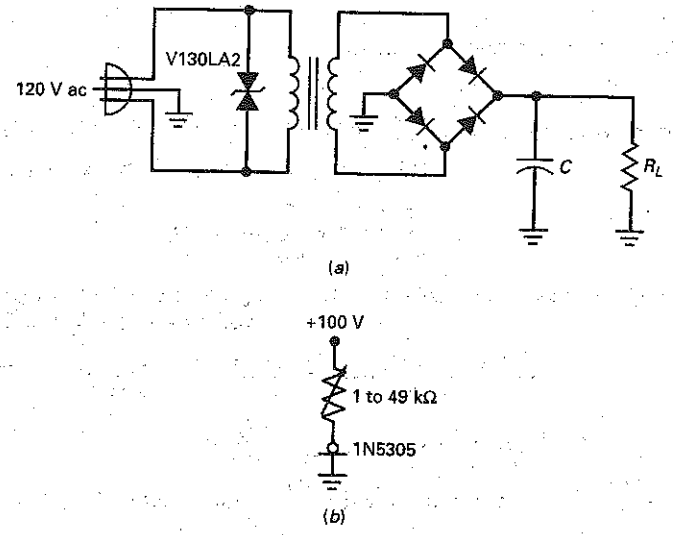

or more. In some equipment, filters are used between the power line and the primary of the transformer to eliminate the problems caused by ac line transients.

One of the devices used for line filtering is the **varistor** (also called a *transient suppressor*). This semiconductor device is like two back-to-back zener diodes with a high breakdown voltage in both directions. Varistors are commercially available with breakdown voltages from 10 to 1000 V. They can handle peak transient currents in the hundreds or thousands of amperes.

For instance, a V130LA2 is a varistor with a breakdown voltage of 184 V (equivalent to 130 V rms) and a peak current rating of 400 A. Connect one of these across the primary winding as shown in Fig. 5-35*a*, and you don't have to worry about spikes. The varistor will clip all spikes at the 184-V level and protect your power supply.

Current-Regulator Diodes

These are diodes that work in a way exactly opposite to the way zener diodes work. Instead of holding the voltage constant, these diodes hold the current constant. Known as **current-regulator diodes** (or *constant-current diodes*), these devices keep the current through them fixed when the voltage changes. For example, the 1N5305 is a constant-current diode with a typical current of 2 mA over a voltage range of 2 to 100 V. Figure 5-35*b* shows the schematic symbol of a current-regulator diode. In Fig. 5-35*b*, the diode will hold the load current constant at 2 mA even though the load resistance is varied from 1 to 49 kΩ.

Step-Recovery Diodes

The **step-recovery diode** has the unusual doping profile shown in Fig. 5-36*a*. This graph indicates that the density of carriers decreases near the junction. This unusual distribution of carriers causes a phenomenon called *reverse snap-off*.

Figure 5-36*b* shows the schematic symbol for a step-recovery diode. During the positive half cycle, the diode conducts like any silicon diode. But during the negative half cycle, reverse current exists for a while because of the stored charges, and then suddenly drops to zero.

Figure 5-36 Step-recovery diode. (*a*) Doping profile shows less doping near junction; (*b*) circuit rectifying an ac input signal; (*c*) snap-off produces a positive voltage step rich in harmonics.

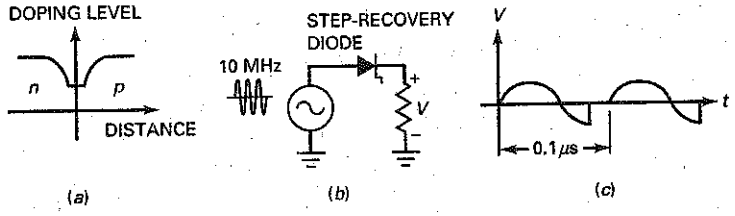

Figure 5-36*c* shows the output voltage. It's as though the diode conducts reverse current for a while, and then suddenly snaps open. This is why the step-recovery diode is also known as a *snap diode*. The sudden step in current is rich in harmonics and can be filtered to produce a sine wave of a higher frequency. (*Harmonics* are multiples of the input frequency like $2f_{in}$, $3f_{in}$, and $4f_{in}$.) Because of this, step-recovery diodes are useful in frequency multipliers, circuits whose output frequency is a multiple of the input frequency.

Back Diodes

Zener diodes normally have breakdown voltages greater than 2 V. By increasing the doping level, we can get the zener effect to occur near zero. Forward conduction still occurs around 0.7 V, but now reverse conduction (breakdown) starts at approximately −0.1 V.

A diode with a graph like Fig. 5-37*a* is called a **back diode** because it conducts better in the reverse than in the forward direction. Figure 5-34*b* shows a sine wave with a peak of 0.5 V driving a back diode and a load resistor. (Notice that the zener symbol is used for the back diode.) The 0.5 V is not enough to turn on the diode in the forward direction, but it is enough to break down the diode in the reverse direction. For this reason, the output is a half-wave signal with a peak of 0.4 V, as shown in Fig. 5-37*b*.

Back diodes are occasionally used to rectify weak signals with peak amplitudes between 0.1 and 0.7 V.

Tunnel Diodes

By increasing the doping level of a back diode, we can get breakdown to occur at 0 V. Furthermore, the heavier doping distorts the forward curve, as shown in Fig. 5-38*a*. A diode with this graph is called a **tunnel diode.**

Figure 5-38*b* shows the schematic symbol for a tunnel diode. This type of diode exhibits a phenomenon known as **negative resistance.** This means that

Figure 5-37 Back diode. (*a*) Breakdown occurs at −0.1 V; (*b*) circuit rectifying weak ac signal.

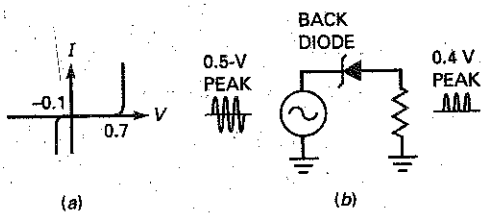

Figure 5-38 Tunnel diode. (*a*) Breakdown occurs at 0 V; (*b*) schematic symbol.

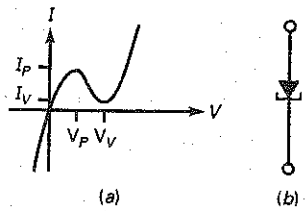

an increase in forward voltage produces a decrease in forward current, at least over the part of the graph between V_P and V_V. The negative resistance of tunnel diodes is useful in high-frequency circuits called *oscillators*. These circuits are able to generate a sinusoidal signal, similar to that produced by an ac generator. But unlike the ac generator that converts mechanical energy to a sinusoidal signal, an oscillator converts dc energy to a sinusoidal signal. Later chapters will show you how to build oscillators.

PIN Diodes

A **PIN diode** is a semiconductor device that operates as a variable resistor at RF and microwave frequencies. Figure 5-39*a* shows its construction. It consists of an intrinsic (pure) semiconductor material sandwiched between p-type and n-type materials. Figure 5-39*b* shows the schematic symbol for the PIN diode.

When the diode is forward biased, it acts like a current-controlled resistance. Figure 5-39*c* shows how the PIN diode's series resistance R_S decreases as its forward current increases. When reverse biased, the PIN diode acts like a fixed capacitor. The PIN diode is widely used in RF and microwave modulator circuits.

Table of Devices

Summary Table 5-1 lists all the special-purpose devices in this chapter. The zener diode is useful in voltage regulators, the LED as a dc or an ac indicator, the seven-segment indicator in measuring instruments, and so on. You should study the table and remember the ideas it contains.

Figure 5-39 PIN diode. (*a*) Construction; (*b*) schematic symbol; (*c*) series resistance.

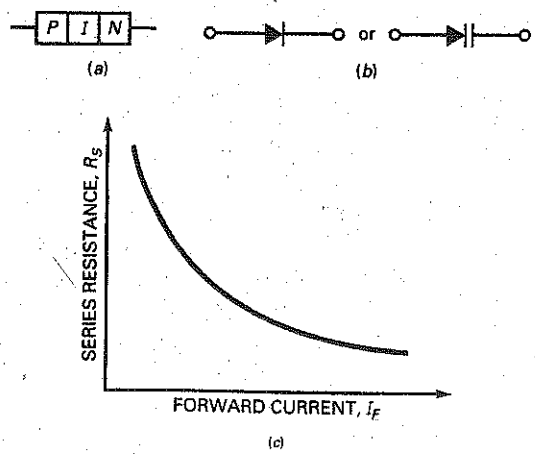

Summary Table 5-1	Special-Purpose Devices	
Device	**Key Idea**	**Application**
Zener diode	Operates in breakdown region	Voltage regulators
LED	Emits noncoherent light	DC or ac indicators
Seven-segment indicator	Can display numbers	Measuring instruments
Photodiode	Light produces minority carriers	Light detectors
Optocoupler	Combines LED and photodiode	Input/output isolators
Laser diode	Emits coherent light	CD/DVD players, broadband communications
Schottky diode	Has no charge storage	High-frequency rectifiers (300 MHz)
Varactor	Acts like variable capacitance	TV and receiver tuners
Varistor	Breaks down both ways	Line-spike protectors
Current-regulator diode	Holds current constant	Current regulators
Step-recovery diode	Snaps off during reverse conduction	Frequency multipliers
Back diode	Conducts better in reverse	Weak-signal rectifiers
Tunnel diode	Has a negative-resistance region	High-frequency oscillators
PIN diode	Controlled resistance	Microwave communications

Summary

SEC. 5-1 THE ZENER DIODE

This is a special diode optimized for operation in the breakdown region. Its main use is in voltage regulators—circuits that hold the load voltage constant. Ideally, a reverse-biased zener diode is like a perfect battery. To a second approximation, it has a bulk resistance that produces a small additional voltage.

SEC. 5-2 THE LOADED ZENER REGULATOR

When a zener diode is in parallel with a load resistor, the current through the current-limiting resistor equals the sum of the zener current and the load current. The process for analyzing a zener regulator consists of finding the series current, load current, and zener current (in that order).

SEC. 5-3 SECOND APPROXIMATION OF A ZENER DIODE

In the second approximation, we visualize a zener diode as a battery of V_Z and a series resistance of R_Z. The current through R_Z produces an additional voltage across the diode, but this voltage is usually small. You need zener resistance in order to calculate ripple reduction.

SEC. 5-4 ZENER DROP-OUT POINT

A zener regulator will fail to regulate if the zener diode comes out of breakdown. The worst-case conditions occur for minimum source voltage, maximum series resistance, and minimum load resistance. For the zener regulator to work properly under all operating conditions, there must be zener current under the worst-case conditions.

SEC. 5-5 READING A DATA SHEET

The most important quantities on the data sheet of zener diodes are the zener voltage, the maximum power rating, the maximum current rating, and the tolerance. Designers also need the zener resistance, the derating factor, and a few other items.

SEC. 5-6 TROUBLESHOOTING

Troubleshooting is an art and a science. Because of this, you can learn only so much from a book. The rest has to be learned from direct experience with circuits in trouble. Because troubleshooting is an art, you have to ask "What if?" often and feel your way to a solution.

SEC. 5-7 LOAD LINES

The intersection of the load line and the zener diode graph is the *Q* point. When the source voltage changes, a different load line appears with a different *Q* point. Although the two *Q* points may have different currents, the voltages are almost identical. This is a visual demonstration of voltage regulation.

SEC. 5-8 OPTOELECTRONIC DEVICES

The LED is widely used as an indicator on instruments, calculators, and other electronic equipment. By combining seven LEDs in a package, we get a seven-segment indicator. Another important optoelectronic device is the optocoupler, which allows us to couple a signal between two isolated circuits.

SEC. 5-9 THE SCHOTTKY DIODE

The reverse recovery time is the time it takes a diode to shut off after it is suddenly switched from forward to reverse bias. This time may be only a few nanoseconds, but it places a limit on how high the frequency can be in a rectifier circuit. The Schottky diode is a special diode with almost zero reverse recovery time. Because of this, the Schottky diode is useful at high frequencies where short switching times are needed.

SEC. 5-10 THE VARACTOR

The width of the depletion layer increases with the reverse voltage. This is why the capacitance of a varactor can be controlled by the reverse voltage. A common application is remote tuning of radio and television sets.

SEC. 5-11 OTHER DIODES

Varistors are useful as transient suppressors. Constant-current diodes hold the current, rather than the voltage, constant. Step-recovery diodes snap off and produce a step voltage that is rich in harmonics. Back diodes conduct better in the reverse direction than in the forward direction. Tunnel diodes exhibit negative resistance, which can be used in high-frequency oscillators. PIN diodes use a forward-biased control current to change its resistance in RF and microwave communication circuits.

Derivations

(5-3) Series current:

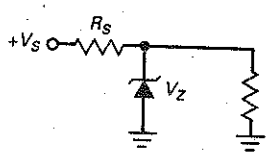

$$I_S = \frac{V_S - V_Z}{R_S}$$

(5-4) Load voltage:

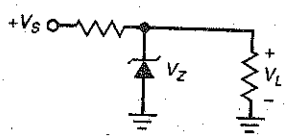

$$V_L = V_Z$$

(5-5) Load current:

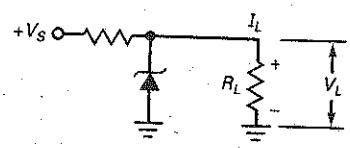

$$I_L = \frac{V_L}{R_L}$$

(5-6) Zener current:

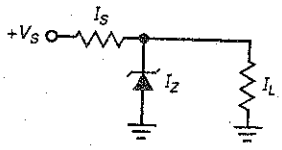

$$I_Z = I_S - I_L$$

(5-7) Change in load voltage:

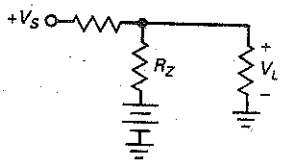

$$\Delta V_L = I_Z R_Z$$

(5-8) Output ripple:

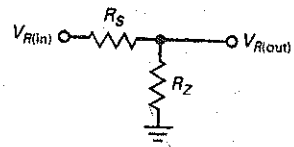

$$V_{R(out)} \approx \frac{R_Z}{R_S} V_{R(in)}$$

(5-9) Maximum series resistance:

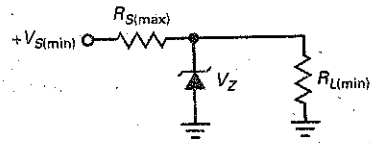

$$R_{S(max)} = \left(\frac{V_{S(min)}}{V_Z} - 1\right) R_{L(min)}$$

(5-10) Maximum series resistance:

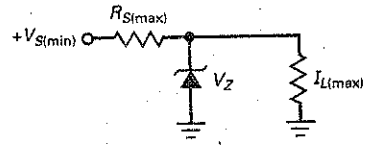

$$R_{S(max)} = \frac{V_{S(min)} - V_Z}{I_{L(max)}}$$

(5-13) LED current:

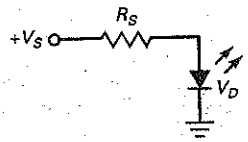

$$I_S = \frac{V_S - V_D}{R_S}$$

Student Assignments

1. **What is true about the breakdown voltage in a zener diode?**
   a. It decreases when current increases.
   b. It destroys the diode.
   c. It equals the current times the resistance.
   d. It is approximately constant.

2. **Which of these is the best description of a zener diode?**
   a. It is a rectifier diode.
   b. It is a constant-voltage device.
   c. It is a constant-current device.
   d. It works in the forward region.

3. **A zener diode**
   a. Is a battery
   b. Has a constant voltage in the breakdown region
   c. Has a barrier potential of 1 V
   d. Is forward biased

4. **The voltage across the zener resistance is usually**
   a. Small
   b. Large
   c. Measured in volts
   d. Subtracted from the breakdown voltage

5. **If the series resistance increases in an unloaded zener regulator, the zener current**
   a. Decreases
   b. Stays the same
   c. Increases
   d. Equals the voltage divided by the resistance

6. **In the second approximation, the total voltage across the zener diode is the sum of the breakdown voltage and the voltage across the**
   a. Source
   b. Series resistor
   c. Zener resistance
   d. Zener diode

7. **The load voltage is approximately constant when a zener diode is**
   a. Forward biased
   b. Reverse biased
   c. Operating in the breakdown region
   d. Unbiased

8. **In a loaded zener regulator, which is the largest current?**
   a. Series current
   b. Zener current
   c. Load current
   d. None of these

9. **If the load resistance increases in a zener regulator, the zener current**
   a. Decreases
   b. Stays the same
   c. Increases
   d. Equals the source voltage divided by the series resistance

10. **If the load resistance decreases in a zener regulator, the series current**
    a. Decreases
    b. Stays the same
    c. Increases
    d. Equals the source voltage divided by the series resistance

11. **When the source voltage increases in a zener regulator, which of these currents remains approximately constant?**
    a. Series current
    b. Zener current
    c. Load current
    d. Total current

12. **If the zener diode in a zener regulator is connected with the wrong polarity, the load voltage will be closest to**
   a. 0.7 V
   b. 10 V
   c. 14 V
   d. 18 V

13. **When a zener diode is operating above its power-rated temperature**
   a. It will immediately be destroyed
   b. You must decrease its power rating
   c. You must increase its power rating
   d. It will not be affected

14. **Which of the following will not indicate a zener diode's breakdown voltage?**
   a. In-circuit voltage drop
   b. Curve tracer
   c. Reverse-bias test circuit
   d. DMM

15. **At high frequencies, ordinary diodes don't work properly because of**
   a. Forward bias
   b. Reverse bias
   c. Breakdown
   d. Charge storage

16. **The capacitance of a varactor diode increases when the reverse voltage across it**
   a. Decreases
   b. Increases
   c. Breaks down
   d. Stores charges

17. **Breakdown does not destroy a zener diode, provided the zener current is less than the**
   a. Breakdown voltage
   b. Zener test current
   c. Maximum zener current rating
   d. Barrier potential

18. **As compared to a silicon rectifier diode, an LED has a**
   a. Lower forward voltage and lower breakdown voltage
   b. Lower forward voltage and higher breakdown voltage
   c. Higher forward voltage and lower breakdown voltage
   d. Higher forward voltage and higher breakdown voltage

19. **To display the digit 0 in a seven-segment indicator,**
   a. *C* must be off
   b. *G* must be off
   c. *F* must be on
   d. All segments must be lighted

20. **A photodiode is normally**
   a. Forward biased
   b. Reverse biased
   c. Neither forward nor reverse biased
   d. Emitting light

21. **When the light decreases, the reverse minority-carrier current in a photodiode**
   a. Decreases
   b. Increases
   c. Is unaffected
   d. Reverses direction

22. **The device associated with voltage-controlled capacitance is a**
   a. Light-emitting diode
   b. Photodiode
   c. Varactor diode
   d. Zener diode

23. **If the depletion layer width decreases, the capacitance**
   a. Decreases
   b. Stays the same
   c. Increases
   d. Is variable

24. **When the reverse voltage decreases, the capacitance**
   a. Decreases
   b. Stays the same
   c. Increases
   d. Has more bandwidth

25. **The varactor is usually**
   a. Forward biased
   b. Reverse biased
   c. Unbiased
   d. Operated in the breakdown region

26. **The device to use for rectifying a weak ac signal is a**
   a. Zener diode
   b. Light-emitting diode
   c. Varistor
   d. Back diode

27. **Which of the following has a negative-resistance region?**
   a. Tunnel diode
   b. Step-recovery diode
   c. Schottky diode
   d. Optocoupler

28. **A blown-fuse indicator uses a**
   a. Zener diode
   b. Constant-current diode
   c. Light-emitting diode
   d. PIN diode

29. **To isolate an output circuit from an input circuit, which is the device to use?**
   a. Back diode
   b. Optocoupler
   c. Seven-segment indicator
   d. Tunnel diode

30. **The diode with a forward voltage drop of approximately 0.25 V is the**
   a. Step-recovery diode
   b. Schottky diode
   c. Back diode
   d. Constant-current diode

31. **For typical operation, you need to use reverse bias with a**
   a. Zener diode
   b. Photodiode
   c. Varactor
   d. All of the above

32. **As the forward current through a PIN diode decreases, its resistance**
   a. Increases
   b. Decreases
   c. Remains constant
   d. Cannot be determined

Problems

SEC. 5-1 THE ZENER DIODE

5-1 MultiSim An unloaded zener regulator has a source voltage of 24 V, a series resistance of 470 Ω, and a zener voltage of 15 V. What is the zener current?

5-2 If the source voltage in Prob. 5-1 varies from 24 to 40 V, what is the maximum zener current?

5-3 If the series resistor of Prob. 5-1 has a tolerance of ±5 percent, what is the maximum zener current?

SEC. 5-2 THE LOADED ZENER REGULATOR

5-4 MultiSim If the zener diode is disconnected in Fig. 5-40, what is the load voltage?

Figure 5-40

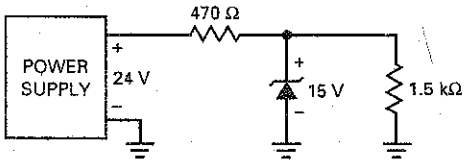

5-5 MultiSim Calculate all three currents in Fig. 5-40.

5-6 Assuming a tolerance of ±5 percent in both resistors of Fig. 5-40, what is the maximum zener current?

5-7 Suppose the supply voltage of Fig. 5-40 can vary from 24 to 40 V. What is the maximum zener current?

5-8 The zener diode of Fig. 5-40 is replaced with a 1N963B. What are the load voltage and the zener current?

5-9 Draw the schematic diagram of a zener regulator with a supply voltage of 20 V, a series resistance of 330 Ω, a zener voltage of 12 V, and a load resistance of 1 kΩ. What are the load voltage and the zener current?

SEC. 5-3 SECOND APPROXIMATION OF A ZENER DIODE

5-10 The zener diode of Fig. 5-40 has a zener resistance of 14 Ω. If the power supply has a ripple of 1 V pp, what is the ripple across the load resistor?

5-11 During the day, the ac line voltage changes. This causes the unregulated 24-V output of the power supply to vary from 21.5 to 25 V. If the zener resistance is 14 Ω, what is the voltage change over the foregoing range?

SEC. 5-4 ZENER DROP-OUT POINT

5-12 Assume the supply voltage of Fig. 5-40 decreases from 24 to 0 V. At some point along the way, the zener diode will stop regulating. Find the supply voltage where regulation is lost.

5-13 In Fig. 5-40, the unregulated voltage out of the power supply may vary from 20 to 26 V and the load resistance may vary from 500 Ω to 1.5 kΩ. Will the zener regulator fail under these conditions? If so, what value should the series resistance be?

5-14 The unregulated voltage in Fig. 5-40 may vary from 18 to 25 V, and the load current may vary from 1 to 25 mA. Will the zener regulator stop regulating under these conditions? If so, what is the maximum value for R_S?

5-15 What is the minimum load resistance that may be used in Fig. 5-40 without losing zener regulation?

SEC. 5-5 READING A DATA SHEET

5-16 A zener diode has a voltage of 10 V and a current of 20 mA. What is the power dissipation?

5-17 A 1N968 has 5 mA through it. What is the power?

5-18 What is the power dissipation in the resistors and zener diode of Fig. 5-40?

5-19 The zener diode of Fig. 5-40 is a 1N4744A. What is the minimum zener voltage? The maximum?

5-20 If the lead temperature of a 1N4736A zener diode rises to 100°C, what is the diode's new power rating?

SEC. 5-6 TROUBLESHOOTING

5-21 In Fig. 5-40, what is the load voltage for each of these conditions?

a. Zener diode shorted

b. Zener diode open

c. Series resistor open

d. Load resistor shorted

5-22 If you measure approximately 18.3 V for the load voltage of Fig. 5-40, what do you think the trouble is?

5-23 You measure 24 V across the load of Fig. 5-40. An ohmmeter indicates the zener diode is open. Before replacing the zener diode, what should you check for?

5-24 In Fig. 5-41, the LED does not light. Which of the following are possible troubles?

a. V130LA2 is open.

b. Ground between two left bridge diodes is open.

c. Filter capacitor is open.

d. Filter capacitor is shorted.

e. 1N5314 is open.

f. 1N5314 is shorted.

Figure 5-41

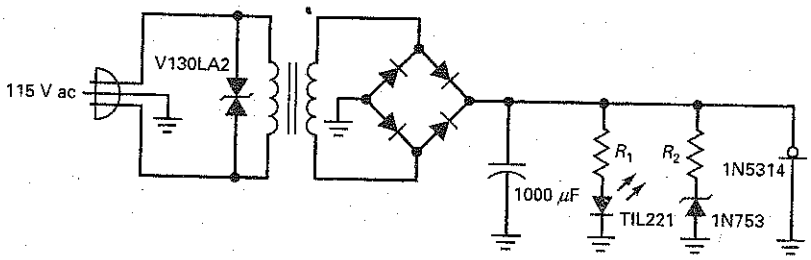

SEC. 5-8 OPTOELECTRONIC DEVICES

5-25 MultiSim What is the current through the LED of Fig. 5-42?

5-26 If the supply voltage of Fig. 5-42 increases to 40 V, what is the LED current?

5-27 If the resistor is decreased to 1 kΩ, what is the LED current in Fig. 5-42?

5-28 The resistor of Fig. 5-42 is decreased until the LED current equals 13 mA. What is the value of the resistance?

Figure 5-42

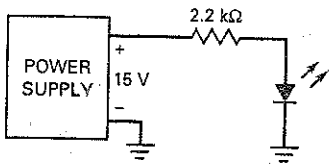

Critical Thinking

5-29 The zener diode of Fig. 5-40 has a zener resistance of 14 Ω. What is the load voltage if you include R_Z in your calculations?

5-30 The zener diode of Fig. 5-40 is a 1N4744A. If the load resistance varies from 1 to 10 kΩ, what is the minimum load voltage? The maximum load voltage? (Use the second approximation.)

5-31 Design a zener regulator to meet these specifications: Load voltage is 6.8 V, source voltage is 20 V, and load current is 30 mA.

5-32 A TIL312 is a seven-segment indicator. Each segment has a voltage drop between 1.5 and 2 V at 20 mA. The supply voltage is +5 V. Design a seven-segment display circuit controlled by on-off switches that has a maximum current drain of 140 mA.

5-33 The secondary voltage of Fig. 5-41 is 12.6 V rms when the line voltage is 115 V rms. During the day the power line varies by ±10 percent. The resistors have tolerances of ±5 percent. The 1N4733A has a tolerance of ±5 percent and a zener resistance of 7 Ω. If R_2 equals 560 Ω, what is the maximum possible value of the zener current at any instant during day?

5-34 In Fig. 5-41, the secondary voltage is 12.6 V rms, and diode drops are 0.7 V each. The 1N5314 is a constant-current diode with a current of 4.7 mA. The LED current is 15.6 mA, and the zener current is 21.7 mA. The filter capacitor has a tolerance of ±20 percent. What is the maximum peak-to-peak ripple?

5-35 Figure 5-43 shows part of a bicycle lighting system. The diodes are Schottky diodes. Use the second approximation to calculate the voltage across the filter capacitor.

Figure 5-43

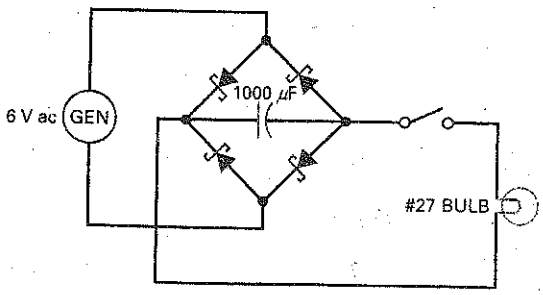

Troubleshooting

MultiSim The troubleshooting table shown in Fig. 5-44 lists the voltage values at each respective circuit point and the condition of the diode D_1, for circuit troubles T_1 through T_8. The first row displays what values would be found under normal operating conditions.

5-36 Find Troubles 1 to 4 in Fig. 5-44.

5-37 Find Troubles 5 to 8 in Fig. 5-44.

Figure 5-44 Troubleshooting.

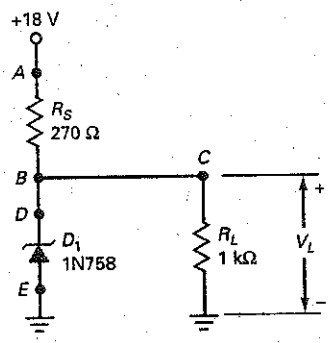

	V_A	V_B	V_C	V_D	D_1
OK	18	10.3	10.3	10.3	OK
$T1$	18	0	0	0	OK
$T2$	18	14.2	14.2	0	OK
$T3$	18	14.2	14.2	14.2	∞
$T4$	18	18	18	18	∞
$T5$	0	0	0	0	OK
$T6$	18	10.5	10.5	10.5	OK
$T7$	18	14.2	14.2	14.2	OK
$T8$	18	0	0	0	0

Job Interview Questions

1. Draw a zener regulator. Then explain to me how it works and what its purpose is.

2. I have a power supply that produces an output of 25 V dc. I want three regulated outputs of approximately 15 V, 15.7 V, and 16.4 V. Show me a circuit that will produce these outputs.

3. I have a zener regulator that stops regulating during the day. The ac line voltage in my area varies from 105 to 125 V rms. Also, the load resistance on the zener regulator varies from 100 Ω to 1 kΩ. Tell me some of the possible reasons why the zener regulator fails during the day.

4. This morning, I was breadboarding an LED indicator. After I connected the LED and turned on the power, the LED did not light up. I checked the LED and discovered that it was open. I tried another LED and got the same results. Tell me some of the possible reasons why this happened.

5. I have heard that a varactor can be used to tune a television receiver. Tell me the basic idea of how it tunes a resonant circuit.

6. Why would an optocoupler be used in an electronic circuit?

7. Given a standard plastic-dome LED package, name two ways to identify the cathode.

8. Explain the differences, if any, between a rectifier diode and a Schottky diode.

9. Draw a circuit like Fig. 5-4*a*, except replace the dc source by an ac source with a peak value of 40 V. Draw the graph of output voltage for a zener voltage of 10 V.

Self-Test Answers

1. d
2. b
3. b
4. a
5. a
6. c
7. c
8. a
9. c
10. b
11. c
12. a
13. b
14. d
15. d
16. a
17. c
18. c
19. b
20. b
21. a
22. c
23. c
24. c
25. b
26. d
27. a
28. c
29. b
30. b
31. d
32. a

Practice Problem Answers

5-1 $I_S = 24.4$ mA

5-3 $I_S = 18.5$ mA;
$I_L = 10$ mA;
$I_Z = 8.5$ mA

5-5 $V_{RL} = 8$ Vpp square-wave

5-7 $V_L = 10.1$ V

5-8 $V_{R\,(out)} = 94$ mVpp

5-10 $R_{S\,(max)} = 65\ \Omega$

5-11 $R_{S\,(max)} = 495\ \Omega$

5-13 $R_S = 330\ \Omega$

5-14 $I_S = 27$ mA;
$P = 7.2$ W

chapter 6

Bipolar Junction Transistors

In 1951, William Schockley invented the first **junction transistor**, a semiconductor device that can amplify (enlarge) electronic signals such as radio and television signals. The transistor has led to many other semiconductor inventions including the **integrated circuit (IC)**, a small device that contains thousands of miniaturized transistors. Because of the IC, modern computers and other electronic miracles are possible.

This chapter introduces the **bipolar junction transistor (BJT)**, the kind that uses both free electrons and holes. The word *bipolar* is an abbreviation for "two polarities." Following chapters will explore how this BJT can be used as an amplifier and as a switch.

Chapter Outline

6-1 The Unbiased Transistor
6-2 The Biased Transistor
6-3 Transistor Currents
6-4 The CE Connection
6-5 The Base Curve
6-6 Collector Curves
6-7 Transistor Approximations
6-8 Reading Data Sheets
6-9 Surface-Mount Transistors
6-10 Troubleshooting

Objectives

After studying this chapter, you should be able to:

- Describe the relationships among the base, emitter, and collector currents of a bipolar junction transistor.
- Draw a diagram of the CE circuit and label each terminal, voltage, and resistance.
- Draw a hypothetical base curve and a set of collector curves, labeling both axes.
- Label the three regions of operation on a bipolar junction transistor collector curve.
- Calculate the respective CE transistor current and voltage values using the ideal transistor and the second transistor approximation.
- List several bipolar junction transistor ratings that might be used by a technician.

Vocabulary

active region
base
bipolar junction transistor (BJT)
breakdown region
collector
collector diode
common emitter (CE)
current gain
cutoff region
dc alpha
dc beta
emitter
emitter diode
h parameters
heat sink
integrated circuit (IC)
junction transistor
power transistors
saturation region
small-signal transistors
surface-mount transistors
switching circuit
thermal resistance

6-1 The Unbiased Transistor

A transistor has three doped regions, as shown in Fig. 6-1. The bottom region is called the **emitter,** the middle region is the **base,** and the top region is the **collector.** In an actual transistor, the base region is much thinner as compared to the collector and emitter regions. The transistor of Fig. 6-1 is an *npn device* because there is a *p* region between two *n* regions. Recall that the majority carriers are free electrons in *n*-type material and holes in *p*-type material.

Transistors are also manufactured as *pnp* devices. A *pnp* transistor has an *n* region between two *p* regions. To avoid confusion between the *npn* and the *pnp* transistors, our early discussions will focus on the *npn* transistor.

GOOD TO KNOW

During the afternoon of December 23, 1947, Walter H. Brattain and John Bardeen demonstrated the amplifying action of the *first* transistor at the Bell Telephone Laboratories. The first transistor was called a *point-contact transistor,* which was the predecessor to the junction transistor invented by Schockley.

Doping Levels

In Fig. 6-1, the emitter is heavily doped. On the other hand, the base is lightly doped. The doping level of the collector is intermediate, between the heavy doping of the emitter and the light doping of the base. The collector is physically the largest of the three regions.

Emitter and Collector Diodes

The transistor of Fig. 6-1 has two junctions: one between the emitter and the base, and another between the collector and the base. Because of this, a transistor is like two back-to-back diodes. The lower diode is called the *emitter-base diode,* or simply the **emitter diode.** The upper diode is called the *collector-base diode,* or the **collector diode.**

GOOD TO KNOW

The transistor in Fig. 6-1 is sometimes referred to as a *bipolar junction transistor,* or *BJT.* However, most people in the electronics industry still use the word *transistor,* with the understanding that a bipolar junction transistor is meant.

Before and After Diffusion

Figure 6-1 shows the transistor regions before diffusion has occurred. As discussed in Chap. 2, free electrons in the *n* region will diffuse across the junction and recombine with the holes in the *p* region. Visualize the free electrons in each *n* region crossing the junction and recombining with holes.

The result is two depletion layers, as shown in Fig. 6-2. For each of these depletion layers, the barrier potential is approximately 0.7 V at 25°C for a silicon transistor (0.3 V at 25°C for a germanium transistor). As before, we emphasize silicon devices because they are now more widely used than germanium devices.

Figure 6-1 Structure of a transistor.

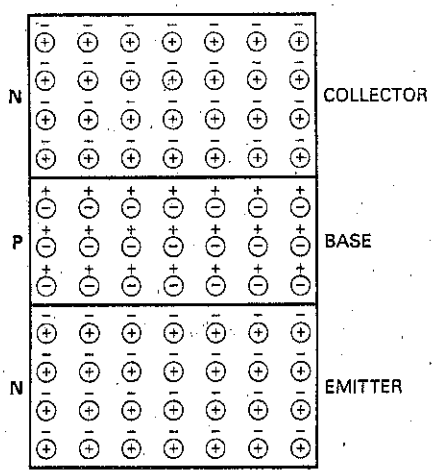

Figure 6-2 Depletion layers.

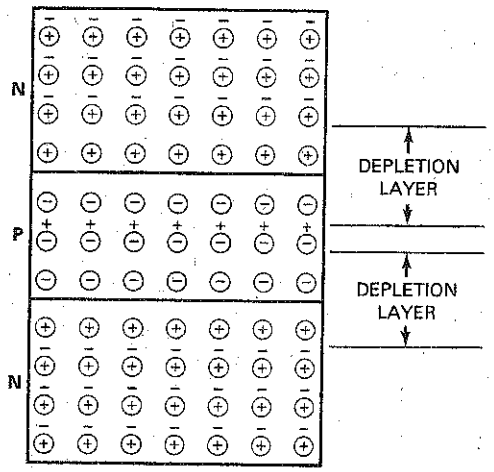

6-2 The Biased Transistor

An unbiased transistor is like two back-to-back diodes. Each diode has a barrier potential of approximately 0.7 V. When you connect external voltage sources to the transistor, you will get currents through the different parts of the transistor.

Emitter Electrons

Figure 6-3 shows a biased transistor. The minus signs represent free electrons. The heavily doped emitter has the following job: to emit or inject its free electrons into the base. The lightly doped base also has a well-defined purpose: to pass emitter-injected electrons on to the collector. The collector is so named because it collects or gathers most of the electrons from the base.

Figure 6-3 is the usual way to bias a transistor. The left source V_{BB} of Fig. 6-3 forward-biases the emitter diode, and the right source V_{CC} reverse-biases the collector diode. Although other biasing methods are possible, forward-biasing the emitter diode and reverse-biasing the collector diode produce the most useful results.

Figure 6-3 Biased transistor.

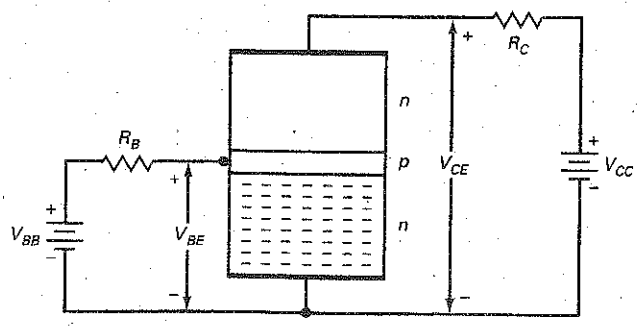

GOOD TO KNOW

In a transistor, the emitter-base depletion layer is narrower than the collector-base depletion layer. The reason can be attributed to the different doping levels of the emitter and collector regions. With much heavier doping in the emitter region, the penetration into the *n* material is minimal because of the availability of many more free electrons. However, on the collector side, fewer free electrons are available and the depletion layer must penetrate more deeply in order to set up the barrier potential.

Base Electrons

At the instant that forward bias is applied to the emitter diode of Fig. 6-3, the electrons in the emitter have not yet entered the base region. If V_{BB} is greater than the emitter-base barrier potential in Fig. 6-3, emitter electrons will enter the base region, as shown in Fig. 6-4. Theoretically, these free electrons can flow in either of two directions. First, they can flow to the left and out of the base, passing through R_B on the way to the positive source terminal. Second, the free electrons can flow into the collector.

Which way will the free electrons go? Most will continue on to the collector. Why? Two reasons: the base is *lightly doped* and *very thin*. The light doping means that the free electrons have a long lifetime in the base region. The very thin base means that the free electrons have only a short distance to go to reach the collector. For these two reasons, almost all the emitter-injected electrons pass through the base to the collector.

Only a few free electrons will recombine with holes in the lightly doped base of Fig. 6-4. Then, as valence electrons, they will flow through the base resistor to the positive side of the V_{BB} supply.

Collector Electrons

Almost all the free electrons go into the collector, as shown in Fig. 6-5. Once they are in the collector, they feel the attraction of the V_{CC} source voltage. Because of this, the free electrons flow through the collector and through R_C until they reach the positive terminal of the collector supply voltage.

Figure 6-4 Emitter injects free electrons into base.

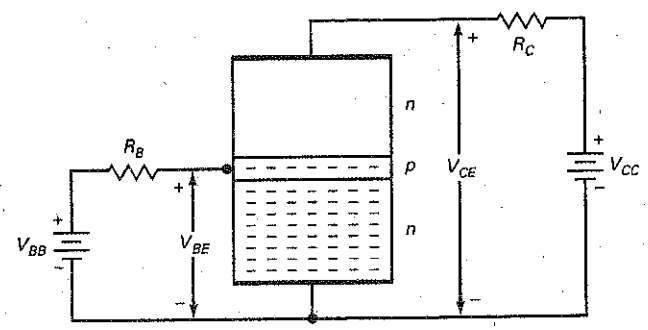

Figure 6-5 Free electrons from base flow into collector.

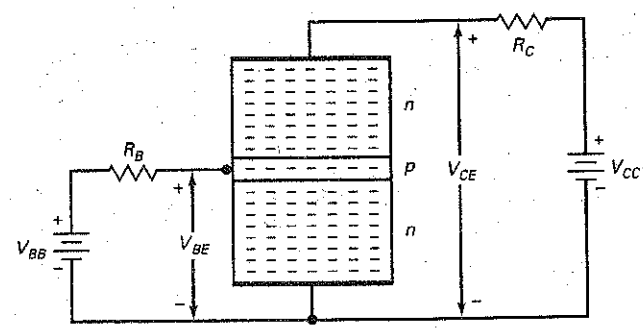

Example 6-3

A transistor has a collector current of 2 mA. If the current gain is 135, what is the base current?

SOLUTION Divide the collector current by the current gain to get:

$$I_B = \frac{2\text{ mA}}{135} = 14.8\ \mu\text{A}$$

PRACTICE PROBLEM 6-3 If $I_C = 10$ mA in Example 6-3, find the transistor's base current.

6-4 The CE Connection

There are three useful ways to connect a transistor: with a CE (common emitter), a CC (common collector), or a CB (common base). The CC and CB connections are discussed in later chapters. In this chapter, we will focus on the CE connection because it is the most widely used.

Common Emitter

In Fig. 6-7*a*, the common or ground side of each voltage source is connected to the emitter. Because of this, the circuit is called a **common emitter (CE)** connection. The circuit has two loops. The left loop is the base loop, and the right loop is the collector loop.

Figure 6-7 CE connection. (*a*) Basic circuit; (*b*) circuit with grounds.

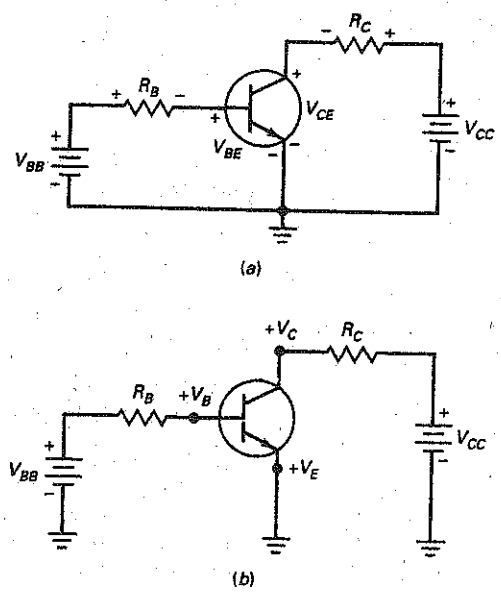

In the base loop, the V_{BB} source forward biases the emitter diode with R_B as a current-limiting resistance. By changing V_{BB} or R_B, we can change the base current. Changing the base current will change the collector current. In other words, *the base current controls the collector current.* This is important. It means that a small current (base) controls a large current (collector).

In the collector loop, a source voltage V_{CC} reverse biases the collector diode through R_C. The supply voltage V_{CC} must reverse bias the collector diode as shown, or else the transistor won't work properly. Stated another way, the collector must be positive in Fig. 6-7*a* to collect most of the free electrons injected into the base.

In Fig. 6-7*a*, the flow of base current in the left loop produces a voltage across the base resistor R_B with the polarity shown. Similarly, the flow of collector current in the right loop produces a voltage across the collector resistor R_C with the polarity shown.

Double Subscripts

Double-subscript notation is used with transistor circuits. When the subscripts are the same, the voltage represents a source (V_{BB} and V_{CC}). When the subscripts are different, the voltage is between the two points (V_{BE} and V_{CE}).

For instance, the subscripts of V_{BB} are the same, which means that V_{BB} is the base voltage source. Similarly, V_{CC} is the collector voltage source. On the other hand, V_{BE} is the voltage between points B and E, between the base and the emitter. Likewise, V_{CE} is the voltage between points C and E, between the collector and the emitter.

Single Subscripts

Single subscripts are used for node voltages, that is, voltages between the subscripted point and ground. For instance, if we redraw Fig. 6-7*a* with grounds, we get Fig. 6-7*b*. Voltage V_B is the voltage between the base and ground, voltage V_C is the voltage between the collector and ground, and voltage V_E is the voltage between the emitter and ground. (In this circuit, V_E is zero.)

You can calculate a double-subscript voltage of different subscripts by subtracting its single-subscript voltages. Here are three examples:

$$V_{CE} = V_C - V_E$$

$$V_{CB} = V_C - V_B$$

$$V_{BE} = V_B - V_E$$

This is how you could calculate the double-subscript voltages for any transistor circuit: Since V_E is zero in this CE connection (Fig. 6-7*b*), the voltages simplify to:

$$V_{CE} = V_C$$

$$V_{CB} = V_C - V_B$$

$$V_{BE} = V_B$$

6-5 The Base Curve

What do you think the graph of I_B versus V_{BE} looks like? It looks like the graph of an ordinary diode as shown in Fig. 6-8*a*. And why not? This is a forward-biased emitter diode, so we would expect to see the usual diode graph of current versus voltage. What this means is that we can use any of the diode approximations discussed earlier.

Figure 6-8 (*a*) Diode curve; (*b*) example.

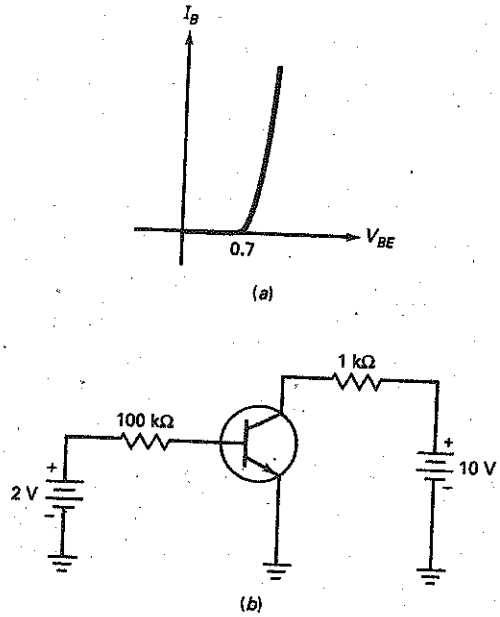

Applying Ohm's law to the base resistor of Fig. 6-7*b* gives this derivation:

$$I_B = \frac{V_{BB} - V_{BE}}{R_B} \tag{6-6}$$

If you use an ideal diode, $V_{BE} = 0$. With the second approximation, $V_{BE} = 0.7$ V.

Most of the time, you will find the second approximation to be the best compromise between the speed of using the ideal diode and accuracy of higher approximations. All you need to remember for the second approximation is that V_{BE} is 0.7 V, as shown in Fig. 6-8*a*.

Example 6-4

MultiSim

Use the second approximation to calculate the base current in Fig. 6-8*b*. What is the voltage across the base resistor? The collector current if $\beta_{dc} = 200$?

SOLUTION The base source voltage of 2 V forward biases the emitter diode through a current-limiting resistance of 100 kΩ. Since the emitter diode has 0.7 V across it, the voltage across the base resistor is:

$$V_{BB} - V_{BE} = 2\text{ V} - 0.7\text{ V} = 1.3\text{ V}$$

The current through the base resistor is:

$$I_B = \frac{V_{BB} - V_{BE}}{R_B} = \frac{1.3\text{ V}}{100\text{ k}\Omega} = 13\ \mu\text{A}$$

With a current gain of 200, the collector current is:

$$I_C = \beta_{dc} I_B = (200)(13\ \mu A) = 2.6\ mA$$

PRACTICE PROBLEM 6-4 Repeat Example 6-4 using a base source voltage $V_{BB} = 4$ V.

6-6 Collector Curves

In Fig. 6-9*a*, we already know how to calculate the base current. Since V_{BB} forward biases the emitter diode, all we need to do is calculate the current through the base resistor R_B. Now, let us turn our attention to the collector loop.

We can vary V_{BB} and V_{CC} in Fig. 6-9*a* to produce different transistor voltages and currents. By measuring I_C and V_{CE}, we can get data for a graph of I_C versus V_{CE}.

For instance, suppose we change V_{BB} as needed to get $I_B = 10\ \mu A$. With this fixed value of base current, we can now vary V_{CC} and measure I_C and V_{CE}. Plotting the data gives the graph shown in Fig. 6-9*b*. (*Note:* this graph is for a 2N3904, a widely used low-power transistor. With other transistors, the numbers may vary but the shape of the curve will be similar.)

When V_{CE} is zero, the collector diode is not reverse biased. This is why the graph shows a collector current of zero when V_{CE} is zero. When V_{CE} increases from zero, the collector current rises sharply in Fig. 6-9*b*. When V_{CE} is a few tenths of a volt, the collector current becomes *almost constant* and equal to 1 mA.

Figure 6-9 (*a*) Basic transistor circuit; (*b*) collector curve.

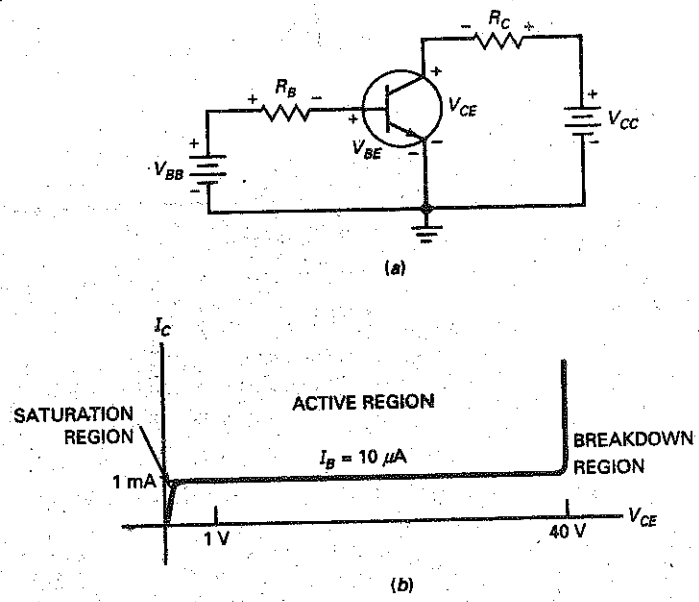

The constant-current region in Fig. 6-9*b* is related to our earlier discussions of transistor action. After the collector diode becomes reverse biased, it is gathering all the electrons that reach its depletion layer. Further increases in V_{CE} cannot increase the collector current. Why? Because the collector can collect only those free electrons that the emitter injects into the base. The number of these injected electrons depends only on the base circuit, not on the collector circuit. This is why Fig. 6-9*b* shows a constant collector current between a V_{CE} of less than 1 V to a V_{CE} of more than 40 V.

If V_{CE} is greater than 40 V, the collector diode breaks down and normal transistor action is lost. The transistor is not intended to operate in the breakdown region. For this reason, one of the maximum ratings to look for on a transistor data sheet is the collector-emitter breakdown voltage $V_{CE(max)}$. If the transistor breaks down, it will be destroyed.

Collector Voltage and Power

Kirchhoff's voltage law says that the sum of voltages around a loop or closed path is equal to zero. When applied to the collector circuit of Fig. 6-9*a*, Kirchhoff's voltage law gives us this derivation:

$$V_{CE} = V_{CC} - I_C R_C \tag{6-7}$$

This says that the collector-emitter voltage equals the collector supply voltage minus the voltage across the collector resistor.

In Fig. 6-9*a*, the transistor has a power dissipation of approximately:

$$P_D = V_{CE} I_C \tag{6-8}$$

This says that the transistor power equals the collector-emitter voltage times the collector current. This power dissipation causes the junction temperature of the collector diode to increase. The higher the power, the higher the junction temperature.

Transistors will burn out when the junction temperature is between 150 and 200°C. One of the most important pieces of information on a data sheet is the maximum power rating $P_{D(max)}$. The power dissipation given by Eq. (6-8) must be less than $P_{D(max)}$. Otherwise, the transistor will be destroyed.

Regions of Operation

The curve of Fig. 6-9*b* has different regions where the action of a transistor changes. First, there is the region in the middle where V_{CE} is between 1 and 40 V. This represents the normal operation of a transistor. In this region, the emitter diode is forward biased, and the collector diode is reverse biased. Furthermore, the collector is gathering almost all the electrons that the emitter has sent into the base. This is why changes in collector voltage have no effect on the collector current. This region is called the **active region.** Graphically, the active region is the horizontal part of the curve. In other words, the collector current is *constant* in this region.

Another region of operation is the **breakdown region.** The transistor should never operate in this region because it will be destroyed. Unlike the zener diode, which is optimized for breakdown operation, a transistor is not intended for operation in the breakdown region.

Third, there is the early rising part of the curve, where V_{CE} is between 0 V and a few tenths of a volt. This sloping part of the curve is called the **saturation region.** In this region, the collector diode has insufficient positive voltage to collect all the free electrons injected into the base. In this region, the base current I_B is larger than normal and the current gain β_{dc} is smaller than normal.

GOOD TO KNOW

When displayed on a curve tracer, the collector curves in Fig. 6-10 actually have a slight upward slope as V_{CE} increases. This rise is the result of the base region becoming slightly smaller as V_{CE} increases. (As V_{CE} increases, the CB depletion layer widens, thus narrowing the base.) With a smaller base region, there are fewer holes available for recombination. Since each curve represents a constant base current, the effect looks like an increase in collector current.

Figure 6-10 Set of collector curves.

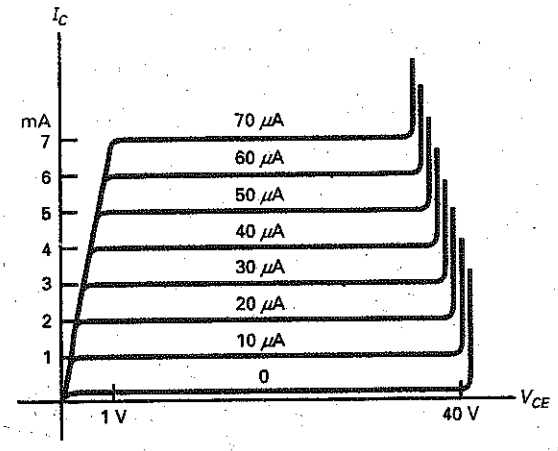

More Curves

If we measure I_B and V_{CE} for $I_B = 20\ \mu A$, we can plot the second curve of Fig. 6-10. The curve is similar to the first curve, except that the collector current is 2 mA in the active region. Again, the collector current is constant in the active region.

When we plot several curves for different base currents, we get a set of collector curves like those in Fig. 6-10. Another way to get this set of curves is with a *curve tracer* (a test instrument that can display I_C versus V_{CE} for a transistor). In the active region of Fig. 6-10, each collector current is 100 times greater than the corresponding base current. For instance, the top curve has a collector current of 7 mA and a base current of 70 μA. This gives a current gain of:

$$\beta_{dc} = \frac{I_C}{I_B} = \frac{7\text{ mA}}{70\ \mu\text{A}} = 100$$

If you check any other curve, you get the same result: a current gain of 100.

With other transistors, the current gain may be different from 100, but the shape of the curves will be similar. All transistors have an active region, a saturation region, and a breakdown region. The active region is the most important because amplification (enlargement) of signals is possible in the active region.

Cutoff Region

Figure 6-10 has an unexpected curve, the one on the bottom. This represents a fourth possible region of operation. Notice that the base current is zero, but there still is a small collector current. On a curve tracer, this current is usually so small that you cannot see it. We have exaggerated the bottom curve by drawing it larger than usual. This bottom curve is called the **cutoff region** of the transistor, and the small collector current is called the *collector cutoff current.*

Why does the collector cutoff current exist? Because the collector diode has reverse minority-carrier current and surface-leakage current. In a well-designed circuit, the collector cutoff current is small enough to ignore. For instance, a 2N3904 has a collector cutoff current of 50 nA. If the actual collector current is 1 mA, ignoring a collector cutoff current of 50 nA produces a calculation error of less than 5 percent.

Recap

A transistor has four distinct operating regions: *active, cutoff, saturation,* and *breakdown.* Transistors operate in the active region when they are used to amplify weak signals. Sometimes, the active region is called the *linear region* because changes in the input signal produce proportional changes in the output signal. The saturation and cutoff regions are useful in digital and computer circuits, referred to as **switching circuits.**

Example 6-5

The transistor of Fig. 6-11*a* has $\beta_{dc} = 300$. Calculate I_B, I_C, V_{CE}, and P_D.

Figure 6-11 Transistor circuit. (*a*) Basic schematic diagram; (*b*) circuit with grounds; (*c*) simplified schematic diagram.

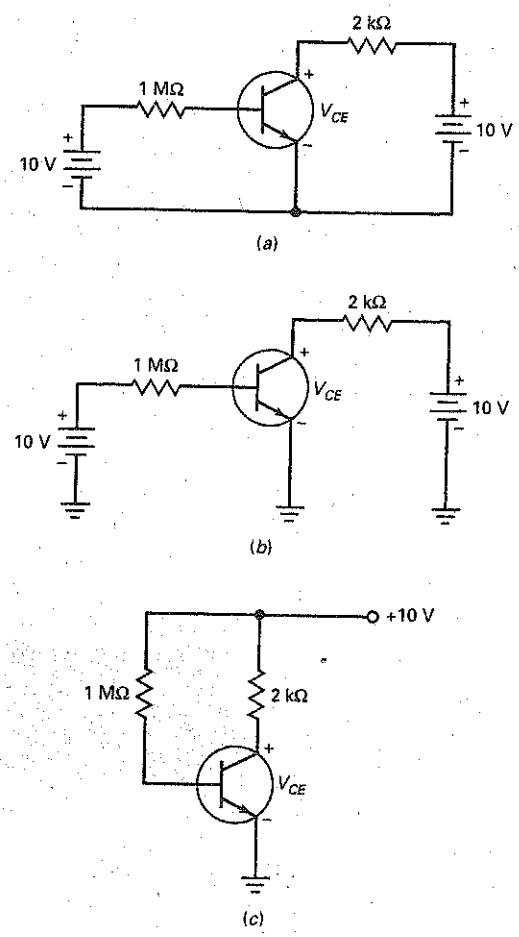

SOLUTION Figure 6-11*b* shows the same circuit with grounds. The base current equals:

$$I_B = \frac{V_{BB} - V_{BE}}{R_B} = \frac{10\text{ V} - 0.7\text{ V}}{1\text{ M}\Omega} = 9.3\ \mu\text{A}$$

The collector current is:

$$I_C = \beta_{dc} I_B = (300)(9.3\ \mu\text{A}) = 2.79\text{ mA}$$

and the collector-emitter voltage is:

$$V_{CE} = V_{CC} - I_C R_C = 10\text{ V} - (2.79\text{ mA})(2\text{ k}\Omega) = 4.42\text{ V}$$

The collector power dissipation is:

$$P_D = V_{CE} I_C = (4.42\text{ V})(2.79\text{ mA}) = 12.3\text{ mW}$$

Incidentally, when both the base and the collector supply voltages are equal, as in Fig. 6-11*b*, you usually see the circuit drawn in the simpler form of Fig. 6-11*c*.

PRACTICE PROBLEM 6-5 Change R_B to 680 kΩ and repeat Example 6-5.

Example 6-6

MultiSim

Figure 6-12 shows a transistor circuit built on a computer screen with MultiSim. Calculate the current gain of the 2N4424.

Figure 6-12 MultiSim circuit for calculating current gain of 2N4424.

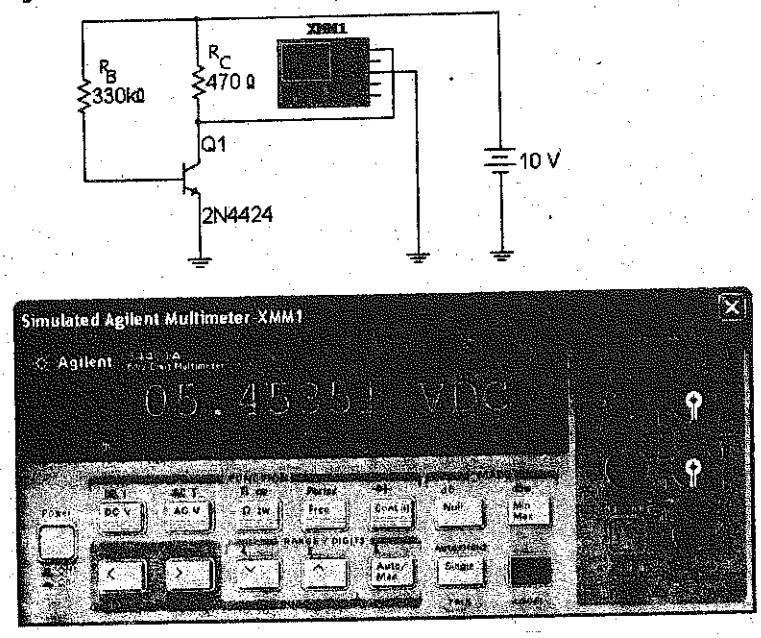

SOLUTION First, get the base current as follows:

$$I_B = \frac{10\text{ V} - 0.7\text{ V}}{330\text{ k}\Omega} = 28.2\ \mu\text{A}$$

Next, we need the collector current. Since the multimeter indicates a collector-emitter voltage of 5.45 V (rounded to three places), the voltage across the collector resistor is:

$$V = 10\text{ V} - 5.45\text{ V} = 4.55\text{ V}$$

Since the collector current flows through the collector resistor, we can use Ohm's law to get the collector current:

$$I_C = \frac{4.55\text{ V}}{470\Omega} = 9.68\text{ mA}$$

Now, we can calculate the current gain:

$$\beta_{dc} = \frac{9.68\text{ mA}}{28.2\ \mu\text{A}} = 343$$

The 2N4424 is an example of transistor with a high current gain. The typical range of β_{dc} for small-signal transistors is 100 to 300.

PRACTICE PROBLEM 6-6 Using MultiSim, change the base resistor of Fig. 6-12 to 560 kΩ and calculate the current gain of the 2N4424.

6-7 Transistor Approximations

Figure 6-13*a* shows a transistor. A voltage V_{BE} appears across the emitter diode, and a voltage V_{CE} appears across the collector-emitter terminals. What is the equivalent circuit for this transistor?

Ideal Approximation

Figure 6-13*b* shows the ideal approximation of a transistor. We visualize the emitter diode as an ideal diode. In this case, $V_{BE} = 0$. This allows us to calculate base current quickly and easily. This equivalent circuit is often useful for troubleshooting when all we need is a rough approximation of base current.

As shown in Fig. 6-13*b*, the collector side of the transistor acts like a current source that pumps a collector current of $\beta_{dc}I_B$ through the collector resistor. Therefore, after you calculate the base current, you can multiply by the current gain to get the collector current.

GOOD TO KNOW

A bipolar transistor is frequently used as a constant current source.

The Second Approximation

Figure 6-13*c* shows the second approximation of a transistor. This is more commonly used because it may improve the analysis significantly when the base-supply voltage is small.

This time we use the second approximation of a diode when calculating base current. For silicon transistors, this means that $V_{BE} = 0.7$ V. (For germanium transistors, $V_{BE} = 0.3$ V.) With the second approximation, the base and collector currents will be slightly less than their ideal values.

Figure 6-13 Transistor approximations. (*a*) Original device; (*b*) ideal approximation; (*c*) second approximation.

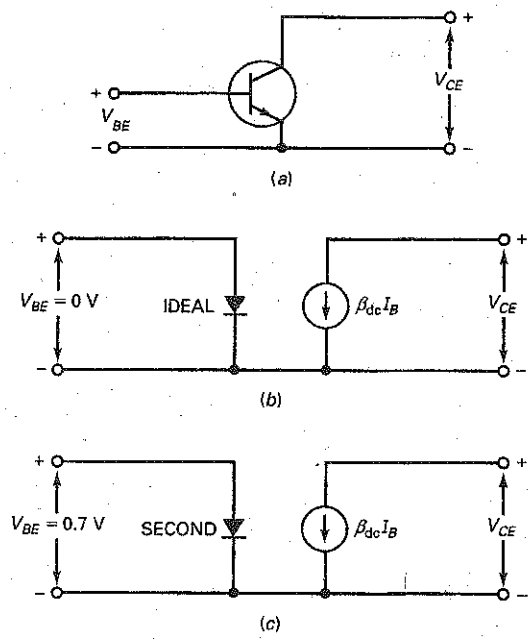

Higher Approximations

The bulk resistance of the emitter diode becomes important only in high-power applications in which the currents are large. The effect of bulk resistance in the emitter diode is to increase V_{BE} to more than 0.7 V. For instance, in some high-power circuits, the V_{BE} across the base-emitter diode may be more than 1 V.

Likewise, the bulk resistance of the collector diode may have a noticeable effect in some designs. Besides emitter and collector bulk resistances, a transistor has many other higher-order effects that make hand calculations tedious and time-consuming. For this reason, calculations beyond the second approximation should use a computer solution.

Example 6-7

What is the collector-emitter voltage in Fig. 6-14? Use the ideal transistor.

Figure 6-14 Example.

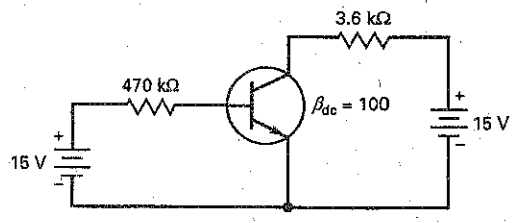

SOLUTION An ideal emitter diode means that:

$$V_{BE} = 0$$

Therefore, the total voltage across R_B is 15 V. Ohm's law tells us that:

$$I_B = \frac{15\text{ V}}{470\text{ k}\Omega} = 31.9\ \mu\text{A}$$

The collector current equals the current gain times the base current:

$$I_C = 100(31.9\ \mu\text{A}) = 3.19\text{ mA}$$

Next, we calculate the collector-emitter voltage. It equals the collector supply voltage minus the voltage drop across the collector resistor:

$$V_{CE} = 15\text{ V} - (3.19\text{ mA})(3.6\text{ k}\Omega) = 3.52\text{ V}$$

In a circuit like Fig. 6-14, knowing the value of the emitter current is not important, so most people would not calculate this quantity. But since this is an example, we will calculate the emitter current. It equals the sum of the collector current and the base current:

$$I_E = 3.19\text{ mA} + 31.9\ \mu\text{A} = 3.22\text{ mA}$$

This value is extremely close to the value of the collector current, which is another reason for not bothering to calculate it. Most people would say that the emitter current is approximately 3.19 mA, the value of the collector current.

Example 6–8

MultiSim

What is the collector-emitter voltage in Fig. 6-14 if you use the second approximation?

SOLUTION In Fig. 6-14, here is how you would calculate the currents and voltages, using the second approximation. The voltage across the emitter diode is:

$$V_{BE} = 0.7\text{ V}$$

Therefore, the total voltage across R_B is 14.3 V, the difference between 15 and 0.7 V. The base current is:

$$I_B = \frac{14.3\text{ V}}{470\text{ k}\Omega} = 30.4\ \mu\text{A}$$

The collector current equals the current gain times the base current:

$$I_C = 100(30.4\ \mu\text{A}) = 3.04\text{ mA}$$

The collector-emitter voltage equals:

$$V_{CE} = 15\text{ V} - (3.04\text{ mA})(3.6\text{ k}\Omega) = 4.06\text{ V}$$

The improvement in this answer over the ideal answer is about half a volt: 4.06 versus 3.52 V. Is this half a volt important? It depends on whether you are troubleshooting, designing, and so on.

Example 6-9

Suppose you measure a V_{BE} of 1 V. What is the collector-emitter voltage in Fig. 6-14?

SOLUTION The total voltage across R_B is 14 V, the difference between 15 and 1 V. Ohm's law tells us that the base current is:

$$I_B = \frac{14\text{ V}}{470\text{ k}\Omega} = 29.8\ \mu\text{A}$$

The collector current equals the current gain times the base current:

$$I_C = 100(29.8\ \mu\text{A}) = 2.98\text{ mA}$$

The collector-emitter voltage equals:

$$V_{CE} = 15\text{ V} - (2.98\text{ mA})(3.6\text{ k}\Omega) = 4.27\text{ V}$$

Example 6-10

What is the collector-emitter voltage in the three preceding examples if the base supply voltage is 5 V?

SOLUTION With the ideal diode:

$$I_B = \frac{5\text{ V}}{470\text{ k}\Omega} = 10.6\ \mu\text{A}$$

$$I_C = 100\ (10.6\ \mu\text{A}) = 1.06\text{ mA}$$

$$V_{CE} = 15\text{ V} - (1.06\text{ mA})(3.6\text{ k}\Omega) = 11.2\text{ V}$$

With the second approximation:

$$I_B = \frac{4.3\text{ V}}{470\text{ k}\Omega} = 9.15\ \mu\text{A}$$

$$I_C = 100(9.15\ \mu\text{A}) = 0.915\text{ mA}$$

$$V_{CE} = 15\text{ V} - (0.915\text{ mA})(3.6\text{ k}\Omega) = 11.7\text{ V}$$

With the measured V_{BE}:

$$I_B = \frac{4\text{ V}}{470\text{ k}\Omega} = 8.51\ \mu\text{A}$$

$$I_C = 100(8.51\ \mu\text{A}) = 0.851\text{ mA}$$

$$V_{CE} = 15\text{ V} - (0.851\text{ mA})(3.6\text{ k}\Omega) = 11.9\text{ V}$$

This example allows you to compare the three approximations for the case of low base supply voltage. As you can see, all answers are within a volt of each other. This is the first clue as to which approximation to use. If you are troubleshooting this circuit, the ideal analysis will probably be adequate. But if you are designing the circuit, you might want to use a computer solution because of its accuracy. Summary Table 6-1 illustrates the difference between the ideal and second transistor approximations.

PRACTICE PROBLEM 6-10 Repeat Example 6-10 using a base supply voltage of 7 V.

Summary Table 6–1 Transistor Circuit Approximations

	Ideal	Second
Circuit	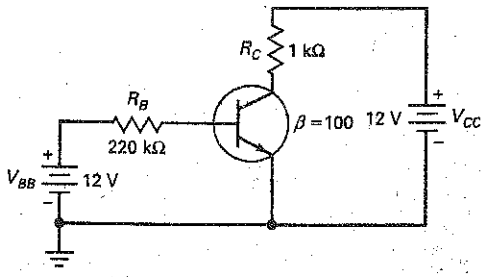	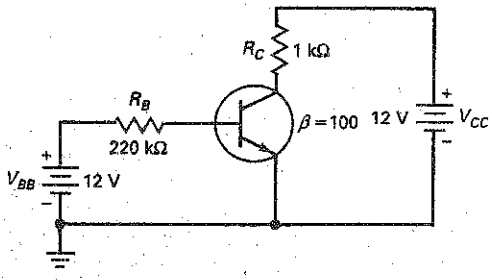
When used	Troubleshooting or rough estimates	When more accurate calculations are needed. Especially when V_{BB} is small.
$V_{BE} =$	0 V	0.7 V
$I_B =$	$\frac{V_{BB}}{R_B} = \frac{12\text{ V}}{220\text{ k}\Omega} = 54.5\ \mu\text{A}$	$\frac{V_{BB} - 0.7\text{ V}}{R_B} = \frac{12\text{ V} - 0.7\text{ V}}{220\text{ k}\Omega} = 51.4\ \mu\text{A}$
$I_C =$	$(I_B)(\beta_{dc}) = (54.5\ \mu\text{A})(100) = 5.45\text{ mA}$	$(I_B)(\beta_{dc}) = (51.4\ \mu\text{A})(100) = 5.14\text{ mA}$
$V_{CE} =$	$V_{CC} - I_C R_C$ $= 12\text{ V} - (5.45\text{ mA})(1\text{ k}\Omega) = 6.55\text{ V}$	$V_{CC} - I_C R_C$ $= 12\text{ V} - (5.14\text{ mA})(1\text{ k}\Omega) = 6.86\text{ V}$

6-8 Reading Data Sheets

Small-signal transistors can dissipate less than a watt; **power transistors** can dissipate more than a watt. When you look at a data sheet for either type of transistor, you should start with the maximum ratings because these are the limits on the transistor currents, voltages, and other quantities.

Breakdown Ratings

In the data sheet shown in Fig. 6-15, the following maximum ratings of a 2N3904 are given:

V_{CEO} 40 V
V_{CBO} 60 V
V_{EBO} 6 V

These voltage ratings are reverse breakdown voltages, and V_{CEO} is the voltage between the collector and the emitter with the base open. The second rating is V_{CBO}, which stands for the voltage from collector to base with the emitter open. Likewise, V_{EBO} is the maximum reverse voltage from emitter to base with the collector open. As usual, a conservative design never allows voltages to get even close to the foregoing maximum ratings. If you recall, even getting close to maximum ratings can shorten the lifetime of some devices.

Figure 6-15(*a*) 2N3904 data sheet.

FAIRCHILD SEMICONDUCTOR™

2N3904 MMBT3904 PZT3904

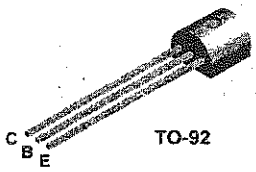

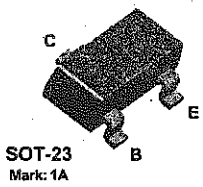

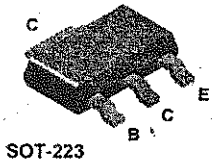

NPN General Purpose Amplifier

This device is designed as a general purpose amplifier and switch. The useful dynamic range extends to 100 mA as a switch and to 100 MHz as an amplifier.

Absolute Maximum Ratings* T_A = 25°C unless otherwise noted

Symbol	Parameter	Value	Units
V_{CEO}	Collector-Emitter Voltage	40	V
V_{CBO}	Collector-Base Voltage	60	V
V_{EBO}	Emitter-Base Voltage	6.0	V
I_C	Collector Current - Continuous	200	mA
T_J, T_{stg}	Operating and Storage Junction Temperature Range	-55 to +150	°C

*These ratings are limiting values above which the serviceability of any semiconductor device may be impaired.

NOTES:
1) These ratings are based on a maximum junction temperature of 150 degrees C.
2) These are steady state limits. The factory should be consulted on applications involving pulsed or low duty cycle operations.

Thermal Characteristics T_A = 25°C unless otherwise noted

Symbol	Characteristic	Max			Units
		2N3904	*MMBT3904	**PZT3904	
P_D	Total Device Dissipation Derate above 25°C	625 5.0	350 2.8	1,000 8.0	mW mW/°C
$R_{\theta JC}$	Thermal Resistance, Junction to Case	83.3			°C/W
$R_{\theta JA}$	Thermal Resistance, Junction to Ambient	200	357	125	°C/W

*Device mounted on FR-4 PCB 1.6" X 1.6" X 0.06."

**Device mounted on FR-4 PCB 36 mm X 18 mm X 1.5 mm; mounting pad for the collector lead min. 6 cm^2.

© 2001 Fairchild Semiconductor Corporation

NPN General Purpose Amplifier
(continued)

Electrical Characteristics
T_A = 25°C unless otherwise noted

Symbol	Parameter	Test Conditions	Min	Max	Units
OFF CHARACTERISTICS					
$V_{(BR)CEO}$	Collector-Emitter Breakdown Voltage	I_C = 1.0 mA, I_B = 0	40		V
$V_{(BR)CBO}$	Collector-Base Breakdown Voltage	I_C = 10 μA, I_E = 0	60		V
$V_{(BR)EBO}$	Emitter-Base Breakdown Voltage	I_E = 10 μA, I_C = 0	6.0		V
I_{BL}	Base Cutoff Current	V_{CE} = 30 V, V_{EB} = 3V		50	nA
I_{CEX}	Collector Cutoff Current	V_{CE} = 30 V, V_{EB} = 3V		50	nA
ON CHARACTERISTICS*					
h_{FE}	DC Current Gain	I_C = 0.1 mA, V_{CE} = 1.0 V	40		
		I_C = 1.0 mA, V_{CE} = 1.0 V	70		
		I_C = 10 mA, V_{CE} = 1.0 V	100	300	
		I_C = 50 mA, V_{CE} = 1.0 V	60		
		I_C = 100 mA, V_{CE} = 1.0 V	30		
$V_{CE(sat)}$	Collector-Emitter Saturation Voltage	I_C = 10 mA, I_B = 1.0 mA		0.2	V
		I_C = 50 mA, I_B = 5.0 mA		0.3	V
$V_{BE(sat)}$	Base-Emitter Saturation Voltage	I_C = 10 mA, I_B = 1.0 mA	0.65	0.85	V
		I_C = 50 mA, I_B = 5.0 mA		0.95	V
SMALL SIGNAL CHARACTERISTICS					
f_T	Current Gain - Bandwidth Product	I_C = 10 mA, V_{CE} = 20 V, f = 100 MHz	300		MHz
C_{obo}	Output Capacitance	V_{CB} = 5.0 V, I_E = 0, f = 1.0 MHz		4.0	pF
C_{ibo}	Input Capacitance	V_{EB} = 0.5 V, I_C = 0, f = 1.0 MHz		8.0	pF
NF	Noise Figure	I_C = 100 μA, V_{CE} = 5.0 V, R_S =1.0kΩ,f=10 Hz to 15.7kHz		5.0	dB
SWITCHING CHARACTERISTICS					
t_d	Delay Time	V_{CC} = 3.0 V, V_{BE} = 0.5 V, I_C = 10 mA, I_{B1} = 1.0 mA		35	ns
t_r	Rise Time			35	ns
t_s	Storage Time	V_{CC} = 3.0 V, I_C = 10mA I_{B1} = I_{B2} = 1.0 mA		200	ns
t_f	Fall Time			50	ns

*Pulse Test: Pulse Width ≤ 300 μs, Duty Cycle ≤ 2.0%

Spice Model

NPN (Is=6.734f Xti=3 Eg=1.11 Vaf=74.03 Bf=416.4 Ne=1.259 Ise=6.734 Ikf=66.78m Xtb=1.5 Br=.7371 Nc=2 Isc=0 Ikr=0 Rc=1 Cjc=3.638p Mjc=.3085 Vjc=.75 Fc=.5 Cje=4.493p Mje=.2593 Vje=.75 Tr=239.5n Tf=301.2p Itf=.4 Vtf=4 Xtf=2 Rb=10)

Maximum Current and Power

Also shown in the data sheet are these values:

I_C	200 mA
P_D	625 mW

Here I_C is the maximum dc collector current rating. This means that a 2N3904 can handle up to 200 mA of direct current, provided the power rating is not exceeded. The next rating, P_D, is the maximum power rating of the device. This power rating depends on whether any attempt is being made to keep the transistor cool. If the transistor is not being fan-cooled and does not have a heat sink (discussed below), its case temperature T_C will be much higher than the ambient temperature T_A.

In most applications, a small-signal transistor like the 2N3904 is not fan-cooled and it does not have a heat sink. In this case, the 2N3904 has a power rating of 625 mW when the ambient temperature T_A is 25°C.

The case temperature T_C is the temperature of the transistor package or housing. In most applications, the case temperature will be higher than 25°C because the internal heat of the transistor increases the case temperature.

The only way to keep the case temperature at 25°C when the ambient temperature is 25°C is by fan-cooling or by using a large heat sink. If fan cooling or a large heat sink is used, it is possible to reduce the temperature of the transistor case to 25°C. For this condition, the power rating can be increased to 1.5 W.

Derating Factors

As discussed in Chap. 5, the derating factor tells you how much you have to reduce the power rating of a device. The derating factor of the 2N3904 is given as 5 mW/°C. This means that you have to reduce the power rating of 625 mW by 5 mW for each degree above 25°C.

Heat Sinks

One way to increase the power rating of a transistor is to get rid of the internal heat faster. This is the purpose of a **heat sink** (a mass of metal). If we increase the surface area of the transistor case, we allow the heat to escape more easily into the surrounding air. For instance, Fig. 6-16*a* shows one type of heat sink. When this is pushed onto the transistor case, heat radiates more quickly because of the increased surface area of the fins.

Figure 6-16*b* shows another approach. This is the outline of a power-tab transistor. A metal tab provides a path out of the transistor for heat. This metal tab can be fastened to the chassis of electronic equipment. Because the chassis is a massive heat sink, heat can easily escape from the transistor to the chassis.

Large power transistors like Fig. 6-16*c* have the collector connected to the case to let heat escape as easily as possible. The transistor case is then fastened to the chassis. To prevent the collector from shorting to chassis ground, a thin insulating washer and heat-conducting compound is used between the transistor case and the chassis. The important idea here is that heat can leave the transistor more rapidly, which means that the transistor has a higher power rating at the same ambient temperature. Sometimes, the transistor is fastened to a large heat sink with fins; this is even more efficient in removing heat from the transistor.

No matter what kind of heat sink is used, the purpose is to lower the case temperature because this will lower the internal or junction temperature of the transistor. The data sheet includes other quantities called **thermal resistances**. These allow a designer to work out the case temperature for different heat sinks.

Figure 6-16 (*a*) Push-on heat sink; (*b*) power-tab transistor; (*c*) power transistor with collector connected to case.

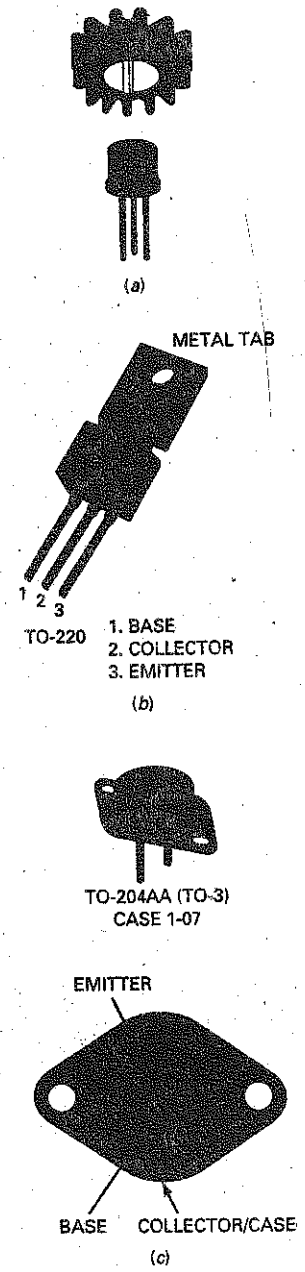

Current Gain

In another system of analysis called ***h* parameters,** h_{FE} rather than β_{dc} is defined as the symbol for current gain. The two quantities are equal:

$$\beta_{dc} = h_{FE} \tag{6-9}$$

Remember this relation because data sheets use the symbol h_{FE} for the current gain.

In the section labeled "On Characteristics," the data sheet of a 2N3904 lists the values of h_{FE} as follows:

I_C, mA	Min. h_{FE}	Max. h_{FE}
0.1	40	–
1	70	–
10	100	300
50	60	–
100	30	–

The 2N3904 works best when the collector current is in the vicinity of 10 mA. At this level of current, the minimum current gain is 100 and the maximum current gain is 300. What does this mean? It means that if you mass-produce a circuit using 2N3904s and a collector current of 10 mA, some of the transistors will have a current gain as low as 100, and some will have a current gain as high as 300. Most of the transistors will have a current gain in the middle of this range.

Notice how the minimum current gain decreases for collector currents that are less than or greater than 10 mA. At 0.1 mA, the minimum current gain is 40. At 100 mA, the minimum current gain is 30. The data sheet shows only the minimum current gain for currents different from 10 mA because the minimum values represent the worst case. Designers usually do worst-case design; that is, they figure out how the circuit will work when the transistor characteristics such as current gain are at their worst case.

Example 6–11

A 2N3904 has $V_{CE} = 10$ V and $I_C = 20$ mA. What is the power dissipation? How safe is this level of power dissipation if the ambient temperature is 25°C?

SOLUTION Multiply V_{CE} by I_C to get:

$$P_D = (10\text{ V})(20\text{ mA}) = 200\text{ mW}$$

Is this safe? If the ambient temperature is 25°C, the transistor has a power rating of 625 mW. This means that the transistor is well within its power rating.

As you know, a good design includes a safety factor to ensure a longer operating life for the transistor. Safety factors of 2 or more are common. A safety factor of 2 means that the designer would allow up to half of 625 mW, or 312 mW. Therefore, a power of only 200 mW is very conservative, provided the ambient temperature stays at 25°C.

Example 6-12

How safe is the level of power dissipation if the ambient temperature is 100°C in Example 6-11?

SOLUTION First, work out the number of degrees that the new ambient temperature is above the reference temperature of 25°C. Do this as follows:

$$100°C - 25°C = 75°C$$

Sometimes, you will see this written as:

$$\Delta T = 75°C$$

where Δ stands for "difference in." Read the equation as the difference in temperature equals 75°C.

Now, multiply the derating factor by the difference in temperature to get:

$$(5\ mW/°C)(75°C) = 375\ mW$$

You often see this written as:

$$\Delta P = 375\ mW$$

where ΔP stands for the difference in power. Finally, you subtract the difference in power from the power rating at 25°C:

$$P_{D(max)} = 625\ mW - 375\ mW = 250\ mW$$

This is the power rating of the transistor when the ambient temperature is 100°C.

How safe is this design? The transistor is still all right because its power is 200 mW compared with the maximum rating of 250 mW. But we no longer have a safety factor of 2. If the ambient temperature were to increase further, or if the power dissipation were to increase, the transistor could get dangerously close to the burnout point. Because of this, a designer might redesign the circuit to restore the safety factor of 2. This means changing circuit values to get a power dissipation of half of 250 mW, or 125 mW.

PRACTICE PROBLEM 6-12 Using a safety factor of 2, could you safely use the 2N3904 transistor of Example 6-12 if the ambient temperature were 75°C?

6-9 Surface-Mount Transistors

Surface-mount transistors are usually found in a simple three-terminal, gull-wing package. The SOT-23 package is the smaller of the two and is used for transistors rated in the milliwatt range. The SOT-223 is the larger package and is used when the power rating is about 1 W.

Figure 6-17 shows a typical SOT-23 package. Viewed from the top, the terminals are numbered in a counterclockwise direction, with terminal 3 the lone terminal on one side. The terminal assignments are fairly well standardized for bipolar transistors: 1 is the base, 2 is the emitter, and 3 is the collector. (The usual terminal assignments for FETs: 1 is the drain, 2 is the source, and 3 is the gate.)

Figure 6-17 The SOT-23 package is suitable for SM transistors with power ratings less than 1 W.

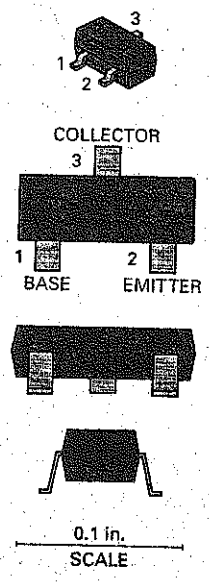

Figure 6-18 The SOT-223 package is designed to dissipate the heat generated by transistors operating in the 1-W range.

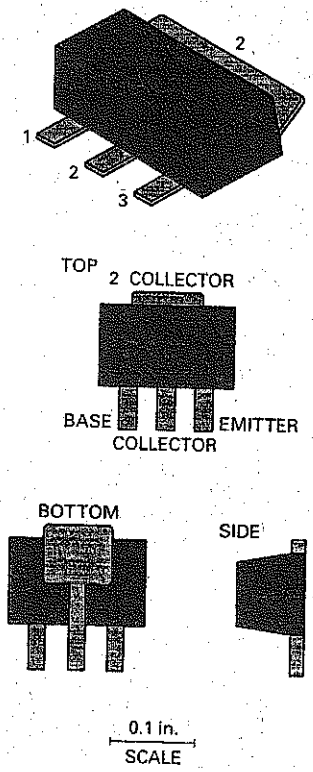

The SOT-223 package is designed to dissipate the heat generated by transistors operating in the 1-W range. This package has a larger surface area than the SOT-23; this increases its ability to dissipate heat. Some of the heat is dissipated from the top surface, and much is carried away by the contact between the device and the circuit board below. The special feature of the SOT-223 case, however, is the extra collector tab that extends from the side opposite the main terminals. The bottom view in Fig. 6-18 shows that the two collector terminals are electrically identical.

The standard terminal assignments are different for the SOT-23 and SOT-223 packages. The three terminals located on one edge are numbered in sequence, from left to right as viewed from the top. Terminal 1 is the base, 2 is the collector (electrically identical to the large tab at the opposite edge), and 3 is the emitter. This is also shown in the data sheet of Fig. 6-15.

The SOT-23 packages are too small to have any standard part identification codes printed on them. Usually the only way to determine the standard identifier is by noting the part number printed on the circuit board and then consulting the parts list for the circuit. SOT-223 packages are large enough to have identification codes printed on them, but these codes are rarely standard transistor identification codes. The typical procedure for learning more about a transistor in an SOT-223 package is the same as for the smaller SOT-23 configurations.

Occasionally a circuit uses SOIC packages that house multiple transistors. The SOIC package resembles the tiny dual-inline package commonly used for ICs and the older feed-through circuit board technology. The terminals on the SOIC, however, have the gull-wing shape required for SM technology.

6-10 Troubleshooting

Figure 6-19 shows a common-emitter circuit with grounds. A base supply of 15 V forward-biases the emitter diode through a resistance of 470 kΩ. A collector supply of 15 V reverse biases the collector diode through a resistance of 1 kΩ. Let us

Figure 6–19 Troubleshooting a circuit.

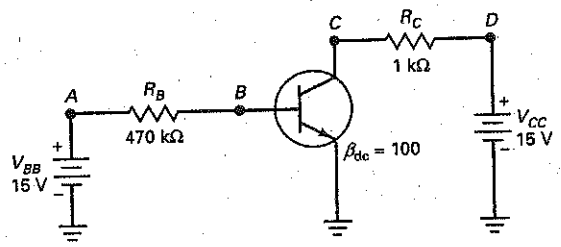

use the ideal approximation to find the collector-emitter voltage. The calculations are as follows:

$$I_B = \frac{15\text{ V}}{470\text{ k}\Omega} = 31.9\ \mu\text{A}$$

$$I_C = 100(31.9\ \mu\text{A}) = 3.19\text{ mA}$$

$$V_{CE} = 15\text{ V} - (3.19\text{ mA})(1\text{ k}\Omega) = 11.8\text{ V}$$

Common Troubles

If you are troubleshooting a circuit like Fig. 6-19, one of the first things to measure is the collector-emitter voltage. It should have a value in the vicinity of 11.8 V. Why don't we use the second or third approximation to get a more accurate answer? Because resistors usually have a tolerance of at least ±5 percent, which causes the collector-emitter voltage to differ from your calculations, no matter what approximation you use.

In fact, when troubles come, they are usually big troubles like shorts or opens. Shorts may occur because of damaged devices or solder splashes across resistors. Opens may occur when components burn out. Troubles like these produce big changes in currents and voltages. For instance, one of the most common troubles occurs when no supply voltage reaches the collector. This could happen in a number of ways, such as a trouble in the power supply itself, an open lead between the power supply and the collector resistor, an open collector resistor, and so on. In any of these cases, the collector voltage of Fig. 6-19 will be approximately zero because there is no collector supply voltage.

Another possible trouble is an open base resistor, which drops the base current to zero. This forces the collector current to drop to zero and the collector-emitter voltage to rise to 15 V, the value of the collector supply voltage. An open transistor has the same effect.

How Troubleshooters Think

The point is this: Typical troubles cause big deviations in transistor currents and voltages. Troubleshooters are seldom looking for differences in tenths of a volt. They are looking for voltages that are radically different from the ideal values. This is why the ideal transistor is useful as a starting point in troubleshooting. Furthermore, it explains why many troubleshooters don't even use calculators to find the collector-emitter voltage.

If they don't use calculators, what do they do? They mentally estimate the value of the collector-emitter voltage. Here is the thinking of an experienced troubleshooter while estimating the collector-emitter voltage in Fig. 6-19.

> *The voltage across the base resistor is about 15 V. A base resistance of 1 MΩ would produce a base current of about 15 μA. Since 470 kΩ is half of 1 MΩ, the base current is twice as much, approximately 30 μA.*

Table 6-1	Troubles and Symptoms		
Trouble	V_B, V	V_C, V	Comments
None	0.7	12	No trouble
R_{BS}	15	15	Transistor blown
R_{BO}	0	15	No base or collector current
R_{CS}	0.7	15	
R_{CO}	0.7	0	
No V_{BB}	0	15	Check supply and lead
No V_{CC}	0.7	0	Check supply and lead

A current gain of 100 gives a collector current of about 3 mA. When this flows through 1 kΩ, it produces a voltage drop of 3 V. Subtracting 3 V from 15 V leaves 12 V across the collector-emitter terminals. So, V_{CE} should measure in the vicinity of 12 V, or else there is something wrong in this circuit.

A Table of Troubles

As discussed in Chap. 5, a shorted component is equivalent to a resistance of zero, whereas an open component is equivalent to a resistance of infinity. For instance, the base resistor R_B may be shorted or open. Let us designate these troubles by R_{BS} and R_{BO}. Similarly, the collector resistor may be shorted or open, symbolized by R_{CS} and R_{CO}.

Table 6-1 shows a few of the troubles that could occur in a circuit like Fig. 6-19. The voltages were calculated using the second approximation. When the circuit is operating normally, you should measure a collector voltage of approximately 12 V. If the base resistor were shorted, +15 V would appear at the base. This large voltage would destroy the emitter diode. The collector diode would probably open as a result, forcing the collector voltage to go to 15 V. The trouble R_{BS} and its voltages are shown in Table 6-1.

If the base resistor were open, there would be no base voltage or current. Furthermore, the collector current would be zero, and the collector voltage would increase to 15 V. The trouble R_{BO} and its voltages are shown in Table 6-1. Continuing like this, we can get the remaining entries of the table.

Figure 6-19 is repeated here for reference.

Figure 6-19 Troubleshooting a circuit.

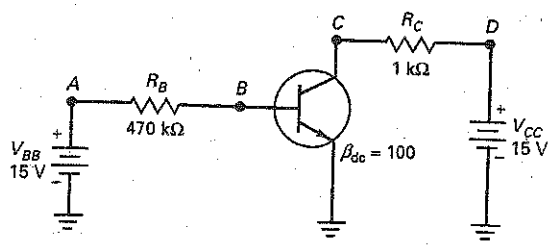

Summary

SEC. 6-1 THE UNBIASED TRANSISTOR

A transistor has three doped regions: an emitter, a base, and a collector. A *pn* junction exists between the base and the emitter; this part of the transistor is called the emitter diode. Another *pn* junction exists between the base and the collector; this part of the transistor is called the collector diode.

SEC. 6-2 THE BIASED TRANSISTOR

For normal operation, you forward bias the emitter diode and reverse bias the collector diode. Under these conditions, the emitter sends free electrons into the base. Most of these free electrons pass through the base to the collector. Because of this, the collector current approximately equals the emitter current. The base current is much smaller, typically less than 5 percent of the emitter current.

SEC. 6-3 TRANSISTOR CURRENTS

The ratio of the collector current to the base current is called the current gain, symbolized as β_{dc} or h_{FE}. For low-power transistors, this is typically 100 to 300. The emitter current is the largest of the three currents, the collector current is almost as large, and the base current is much smaller.

SEC. 6-4 THE CE CONNECTION

The emitter is grounded or common in a CE circuit. The base-emitter part of a transistor acts approximately like an ordinary diode. The base-collector part acts like a current source that is equal to β_{dc} times the base current. The transistor has an active region, a saturation region, a cutoff region, and a breakdown region. The active region is used in linear amplifiers. Saturation and cutoff are used in digital circuits.

SEC. 6-5 THE BASE CURVE

The graph of base current versus base-emitter voltage looks like the graph of an ordinary diode. Because of this, we can use any of the three diode approximations to calculate the base current. Most of the time, the ideal and the second approximation are all that is necessary.

SEC. 6-6 COLLECTOR CURVES

The four distinct operating regions of a transistor are the active region, the saturation region, the cutoff region, and the breakdown region. When it is used as an amplifier, the transistor operates in the active region. When it is used in digital circuits, the transistor usually operates in the saturation and cutoff regions. The breakdown region is avoided because the risk of transistor destruction is too high.

SEC. 6-7 TRANSISTOR APPROXIMATIONS

Exact answers are a waste of time in most electronics work. Almost everybody uses approximations because the answers are adequate for most applications. The ideal transistor is useful for basic troubleshooting. The third approximation is needed for precise design. The second approximation is a good compromise for both troubleshooting and design.

SEC. 6-8 READING DATA SHEETS

Transistors have maximum ratings on their voltages, currents, and powers. Small-signal transistors can dissipate 1 W or less. Power transistors can dissipate more than 1 W. Temperature can change the value of the transistor characteristics. Maximum power decreases with a temperature increase. Also, current gain varies greatly with temperature.

SEC. 6-9 SURFACE-MOUNT TRANSISTORS

Surface-mount transistors (SMTs) are found in a variety of packages. A simple three-terminal gull-wing package is common. Some SMTs are packaged in styles that can dissipate more than 1 W of power. Other surface-mount devices may contain (house) multiple transistors.

SEC. 6-10 TROUBLESHOOTING

When troubles arise, they usually produce large changes in transistor voltages. This is why ideal analysis is usually adequate for troubleshooters. Furthermore, many troubleshooters spurn the use of calculators because it slows down their thinking. The best troubleshooters learn to mentally estimate the voltages they want to measure.

Definitions

(6-2) DC alpha:

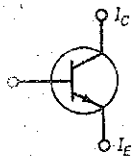

$$\alpha_{dc} = \frac{I_C}{I_E}$$

(6-3) DC beta (current gain)

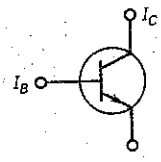

$$\beta_{dc} = \frac{I_C}{I_B}$$

Derivations

(6-1) Emitter current:

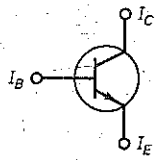

$$I_E = I_C + I_B$$

(6-4) Collector current:

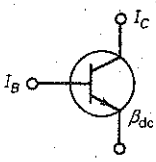

$$I_C = \beta_{dc} I_B$$

(6-5) Base current:

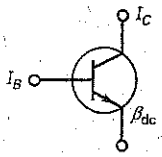

$$I_B = \frac{I_C}{\beta_{dc}}$$

(6-6) Base current:

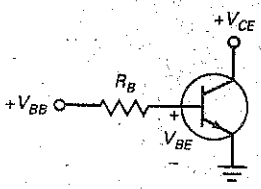

$$I_B = \frac{V_{BB} - V_{BE}}{R_B}$$

(6-7) Collector-emitter voltage:

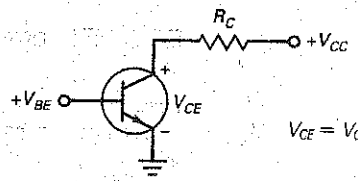

$$V_{CE} = V_{CC} - I_C R_C$$

(6-8) CE power dissipation:

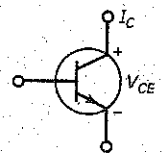

$$P_D = V_{CE} I_C$$

(6-9) Current gain:

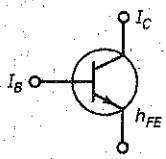

$$\beta_{dc} = h_{FE}$$

Student Assignments

1. **A transistor has how many *pn* junctions?**
   a. 1
   b. 2
   c. 3
   d. 4

2. **What is one important thing transistors do?**
   a. Amplify weak signals
   b. Rectify line voltage
   c. Step-down voltage
   d. Emit light

3. **Who invented the first junction transistor?**
   a. Bell
   b. Faraday
   c. Marconi
   d. Schockley

4. **In an *npn* transistor, the majority carriers in the emitter are**
   a. Free electrons
   b. Holes
   c. Neither
   d. Both

5. **The barrier potential across each silicon depletion layer is**
   a. 0
   b. 0.3 V
   c. 0.7 V
   d. 1 V

6. **The emitter diode is usually**
   a. Forward biased
   b. Reverse biased
   c. Nonconducting
   d. Operating in the breakdown region

7. **For normal operation of the transistor, the collector diode has to be**
   a. Forward biased
   b. Reverse biased
   c. Nonconducting
   d. Operating in the breakdown region

8. **The base of an *npn* transistor is thin and**
   a. Heavily doped
   b. Lightly doped
   c. Metallic
   d. Doped by a pentavalent material

9. **Most of the electrons in the base of an *npn* transistor flow**
   a. Out of the base lead
   b. Into the collector
   c. Into the emitter
   d. Into the base supply

10. **Most of the electrons in the base of an *npn* transistor do not recombine because they**
    a. Have a long lifetime
    b. Have a negative charge
    c. Must flow through the base
    d. Flow out of the base

11. **Most of the electrons that flow through the base will**
    a. Flow into the collector
    b. Flow out of the base lead
    c. Recombine with base holes
    d. Recombine with collector holes

12. **The beta of a transistor is the ratio of the**
    a. Collector current to emitter current
    b. Collector current to base current
    c. Base current to collector current
    d. Emitter current to collector current

13. **Increasing the collector supply voltage will increase**
    a. Base current
    b. Collector current
    c. Emitter current
    d. None of the above

14. **The fact that there are many free electrons in a transistor emitter region means the emitter is**
    a. Lightly doped
    b. Heavily doped
    c. Undoped
    d. None of the above

15. **In a normally biased *npn* transistor, the electrons in the emitter have enough energy to overcome the barrier potential of the**
    a. Base-emitter junction
    b. Base-collector junction
    c. Collector-base junction
    d. Recombination path

16. **In a *pnp* transistor, the major carriers in the emitter are**
    a. Free electrons
    b. Holes
    c. Neither
    d. Both

17. **What is the most important fact about the collector current?**
    a. It is measured in milliamperes.
    b. It equals the base current divided by the current gain.
    c. It is small.
    d. It approximately equals the emitter current.

18. **If the current gain is 100 and the collector current is 10 mA, the base current is**
    a. 10 μA c. 1 A
    b. 100 μA d. 10 A

19. **The base-emitter voltage is usually**
    a. Less than the base supply voltage
    b. Equal to the base supply voltage
    c. More than the base supply voltage
    d. Cannot answer

20. **The collector-emitter voltage is usually**
    a. Less than the collector supply voltage
    b. Equal to the collector supply voltage
    c. More than the collector supply voltage
    d. Cannot answer

21. **The power dissipated by a transistor approximately equals the collector current times**
    a. Base-emitter voltage
    b. Collector-emitter voltage
    c. Base supply voltage
    d. 0.7 V

22. **A small collector current with zero base current is caused by the leakage current of the**
    a. Emitter diode
    b. Collector diode
    c. Base diode
    d. Transistor

23. **A transistor acts like a diode and a**
    a. Voltage source
    b. Current source
    c. Resistance
    d. Power supply

24. **If the base current is 100 mA and the current gain is 30, the emitter current is**
    a. 3.33 mA
    b. 3 A
    c. 3.1 A
    d. 10 A

25. **The base-emitter voltage of an ideal transistor is**
    a. 0
    b. 0.3 V
    c. 0.7 V
    d. 1 V

26. **If you recalculate the collector-emitter voltage with the second approximation, the answer will usually be**
    a. Smaller than the ideal value
    b. The same as the ideal value
    c. Larger than the ideal value
    d. Inaccurate

27. **In the active region, the collector current is not changed significantly by**
    a. Base supply voltage
    b. Base current
    c. Current gain
    d. Collector resistance

28. **The base-emitter voltage of the second approximation is**
    a. 0
    b. 0.3 V
    c. 0.7 V
    d. 1 V

29. **If the base resistor is open, what is the collector current?**
    a. 0
    b. 1 mA
    c. 2 mA
    d. 10 mA

30. **When comparing the power dissipation of a 2N3904 transistor to the PZT3904 surface-mount version, the 2N3904**
    a. Can handle less power
    b. Can handle more power
    c. Can handle the same power
    d. Is not rated

Problems

SEC. 6-3 TRANSISTOR CURRENTS

6-1 A transistor has an emitter current of 10 mA and a collector current of 9.95 mA. What is the base current?

6-2 The collector current is 10 mA, and the base current is 0.1 mA. What is the current gain?

6-3 A transistor has a current gain of 150 and a base current of 30 μA. What is the collector current?

6-4 If the collector current is 100 mA and the current gain is 65, what is the emitter current?

SEC. 6-5 THE BASE CURVE

6-5 MultiSim What is the base current in Fig. 6-20?

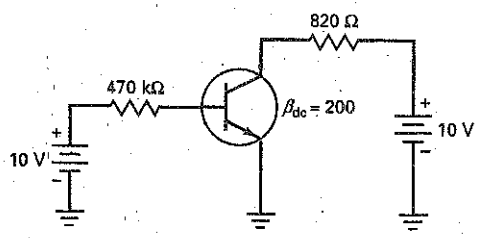

Figure 6-20

6-6 MultiSim If the current gain decreases from 200 to 100 in Fig. 6-20, what is the base current?

6-7 If the 470 kΩ of Fig. 6-20 has a tolerance of ±5 percent, what is the maximum base current?

SEC. 6-6 COLLECTOR CURVES

6-8 MultiSim A transistor circuit similar to Fig. 6-20 has a collector supply voltage of 20 V, a collector resistance of 1.5 kΩ, and a collector current of 6 mA. What is the collector-emitter voltage?

6-9 If a transistor has a collector current of 100 mA and a collector-emitter voltage of 3.5 V, what is its power dissipation?

SEC. 6-7 TRANSISTOR APPROXIMATIONS

6-10 What are the collector-emitter voltage and the transistor power dissipation in Fig. 6-20? (Give answers for the ideal and the second approximation.)

6-11 Figure 6-21*a* shows a simpler way to draw a transistor circuit. It works the same as the circuits already discussed. What is collector-emitter voltage? The transistor power dissipation? (Give answers for the ideal and the second approximation.)

6-12 When the base and collector supplies are equal, the transistor can be drawn as shown in Fig. 6-21*b*. What is the collector-emitter voltage in this circuit? The transistor power? (Give answers for the ideal and the second approximation.)

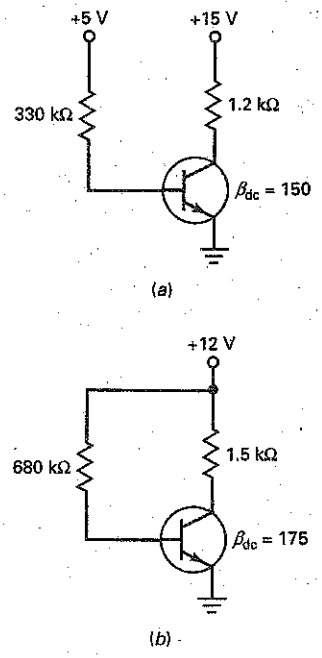

Figure 6-21

SEC. 6-8 READING DATA SHEETS

6-13 What is the storage temperature range of a 2N3904?

6-14 What is the minimum h_{FE} for a 2N3904 for a collector current of 1 mA and a collector-emitter voltage of 1 V?

6-15 A transistor has a power rating of 1 W. If the collector-emitter voltage is 10 V and the collector current is 120 mA, what happens to the transistor?

6-16 A 2N3904 has a power dissipation of 625 mW without a heat sink. If the ambient temperature is 65°C, what happens to the power rating?

SEC. 6-10 TROUBLESHOOTING

6-17 MultiSim In Fig. 6-20, does the collector-emitter voltage increase, decrease, or remain the same for each of these troubles?

a. 470 kΩ is shorted

b. 470 kΩ is open

c. 820 Ω is shorted

d. 820 Ω is open

e. No base supply voltage

f. No collector supply

Critical Thinking

6-18 What is the dc alpha of a transistor that has a current gain of 200?

6-19 What is the current gain of a transistor with a dc alpha of 0.994?

6-20 Design a CE circuit to meet these specifications: $V_{BB} = 5$ V, $V_{CC} = 15$ V, $h_{FE} = 120$, $I_C = 10$ mA, and $V_{CE} = 7.5$ V.

6-21 In Fig. 6-21, what value base resistor would be needed so $V_{CE} = 6.7$ V?

6-22 A 2N3904 has a power rating of 350 mW at room temperature (25°C). If the collector-emitter voltage is 10 V, what is the maximum current that the transistor can handle for an ambient temperature of 50°C?

6-23 Suppose we connect an LED in series with the 820 Ω of Fig. 6-20. What does the LED current equal?

6-24 What is the collector-emitter saturation voltage of a 2N3904 when the collector current is 50 mA? Use the data sheet.

Up-Down Analysis

Use Fig. 6-22 for the remaining problems. Assume increases of approximately 10 percent in the independent variable, and use the second approximation of the transistor. A response should be an N (no change) if the change in a dependent variable is so small that you would have difficulty measuring it.

6-25 Predict the response of each dependent variable in the row labeled V_{BB}. Then answer the following question as simply and directly as possible. What effect does an increase in the base supply voltage have on the dependent variables of the circuit?

6-26 Predict the response of each dependent variable in the row labeled V_{CC}. Then summarize your findings in one or two sentences.

6-27 Predict the response of each dependent variable in the row labeled R_B. List the dependent variables that decrease. Explain why these variables decrease, using Ohm's law or similar basic ideas.

6-28 Predict the response of each dependent variable in the row labeled R_C. List the dependent variables that show no change. Explain why these variables show no change.

6-29 Predict the response of each dependent variable in the row labeled β_{dc}. List the dependent variables that decrease. Explain why these variables decrease.

Figure 6-22 Up-down analysis.

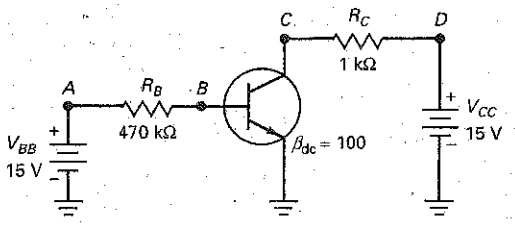

UP-DOWN ANALYSIS

INDEPENDENT VARIABLES	DEPENDENT VARIABLES								
	V_A	V_B	V_C	V_D	I_B	I_C	P_B	P_C	P_D
V_{BB}									
V_{CC}									
R_B									
R_C									
β_{dc}									

Job Interview Questions

1. I want you to draw an *npn* transistor showing the *n* and *p* regions. Then I want you to bias the transistor properly and tell me how it works.
2. Draw a set of collector curves. Then, using these curves, show me where the four operating regions of a transistor are.
3. Draw the two equivalent circuits (ideal and second approximation) to represent a transistor that is operating in the active region. Then, tell me when and how you would use these circuits to calculate the transistor currents and voltages.
4. Draw a transistor circuit with a CE connection. Now, what kind of troubles can you get with a circuit like this and what measurements would you make to isolate each trouble?
5. When looking at a schematic diagram that shows *npn* and *pnp* transistors, how can you identify each type? How can you tell the direction of electron (or conventional) flow?
6. Name a test instrument that can display a set of collector curves, I_C versus V_{CE}, for a transistor.
7. What is the formula for transistor power dissipation? Knowing this relationship, where on the load line would you expect the power dissipation to be maximum?
8. What are the three currents in a transistor, and how are they related?
9. Draw an *npn* and a *pnp* transistor. Label all currents and show directions of flow.
10. Transistors may be connected in any of the following configurations: common emitter, common collector, and common base. Which is the most common configuration?

Self-Test Answers

1.	b	11.	a	21.	b
2.	a	12.	b	22.	b
3.	d	13.	d	23.	b
4.	a	14.	b	24.	c
5.	c	15.	a	25.	a
6.	a	16.	b	26.	c
7.	b	17.	d	27.	d
8.	b	18.	b	28.	c
9.	b	19.	a	29.	a
10.	a	20.	a	30.	a

Practice Problem Answers

6-1 $\beta_{dc} = 200$

6-2 $I_C = 10$ mA

6-3 $I_B = 74.1\ \mu A$

6-4 $V_B = 0.7$ V; $I_B = 33\ \mu A$; $I_C = 6.6$ mA

6-5 $I_B = 13.7\ \mu A$; $I_C = 4.11$ mA; $V_{CE} = 1.78$ V; $P_D = 7.32$ mW

6-6 $I_B = 16.6\ \mu A$; $I_C = 5.89$ mA; $\beta_{dc} = 355$

6-10 Ideal: $I_B = 14.9\ \mu A$; $I_C = 1.49$ mA; $V_{CE} = 9.6$ V
Second: $I_B = 13.4\ \mu A$; $I_C = 1.34$ mA; $V_{CE} = 10.2$ V

6-12 $P_{D(max)} = 375$ mW. Not within the safety factor of 2.

chapter 7

Transistor Fundamentals

There are two basic ways to set up the operating point of a transistor: base bias and emitter bias. Base bias produces a fixed value of base current, whereas emitter bias produces a fixed value of emitter current. Base bias is most useful in switching circuits, whereas emitter bias is predominant in amplifying circuits. This chapter discusses base bias, emitter bias, switching circuits, and optoelectronic circuits.

Objectives

After studying this chapter, you should be able to:

- State why base bias does not work well in amplifying circuits.
- Identify the saturation point and the cutoff point for a given base-biased circuit.
- Calculate the *Q* point for a given base-biased circuit.
- Draw an emitter bias circuit and explain why it works well in amplifying circuits.
- Demonstrate how to do out-of-circuit and in-circuit transistor tests.

Chapter Outline

7-1 Variations in Current Gain
7-2 The Load Line
7-3 The Operating Point
7-4 Recognizing Saturation
7-5 The Transistor Switch
7-6 Emitter Bias
7-7 LED Drivers
7-8 The Effect of Small Changes
7-9 Troubleshooting
7-10 More Optoelectronic Devices

Vocabulary

amplifying circuit
base bias
correction factor
cutoff point
emitter bias
hard saturation
load line
phototransistor
quiescent point
saturation point
soft saturation
switching circuit
two-state circuit

7-1 Variations in Current Gain

The current gain β_{dc} of a transistor depends on three factors: the transistor, the collector current, and the temperature. For instance, when you replace a transistor with another of the same type, the current gain usually changes. Likewise, if the collector current or temperature changes, the current gain will change.

Worst and Best Case

As a concrete example, the data sheet of a 2N3904 lists a minimum h_{FE} of 100 and a maximum of 300 when the temperature is 25°C and the collector current is 10 mA. If we build thousands of circuits with 2N3904s, some of the transistors will have a current gain as low as 100 (worst case), and others will have a current gain as high as 300 (best case).

Figure 7-1 shows the graphs of a 2N3904 for the worst case (minimum h_{FE}). Look at the middle curve, the current gain for an ambient temperature of 25°C. When the collector current is 10 mA, the current gain is 100, the worst case for a 2N3904. (In the best case, a few 2N3904s have a current gain of 300 at 10 mA and 25°C.)

GOOD TO KNOW

The symbol h_{FE} represents the forward current transfer ratio in the common-emitter configuration. The symbol h_{FE} is a hybrid (h)-parameter symbol. The h-parameter system is the most common system in use today for specifying transistor parameters.

Effect of Current and Temperature

When the temperature is 25°C (the middle curve), the current gain is 50 at 0.1 mA. As the current increases from 0.1 mA to 10 mA, h_{FE} increases to a maximum of 100. Then, it decreases to less than 20 at 200 mA.

Also notice the effect of temperature. When the temperature decreases, the current gain is less (the bottom curve). On the other hand, when the temperature increases, h_{FE} increases over most of the current range (the top curve).

Main Idea

As you can see, transistor replacement, collector-current changes, or temperature changes can produce large changes in h_{FE} or β_{dc}. At a given temperature, a 3 : 1 change is possible when a transistor is replaced. When the temperature varies, an additional 3 : 1 variation is possible. And when the current varies, more than a 3 : 1 variation is possible. In summary, the 2N3904 may have a current gain of less than 10 to more than 300. Because of this, any design that depends on a precise value of current gain will fail in mass production.

Figure 7-1 Variation of current gain.

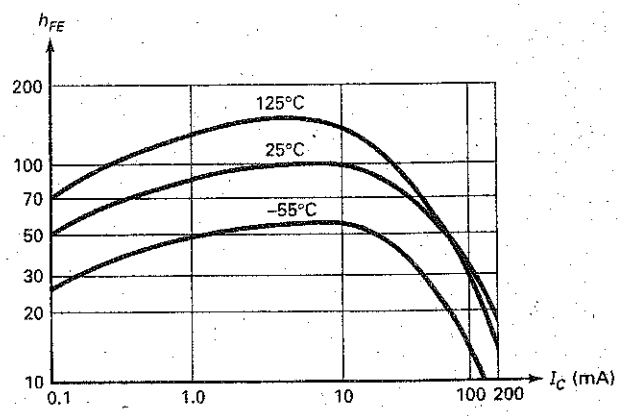

7-2 The Load Line

Figure 7-2*a* shows the CE connection discussed in Chap. 6. Given the values of R_B and β_{dc}, we can calculate collector current I_C and collector voltage V_{CE} using the methods of the preceding chapter.

Base Bias

The circuit of Fig. 7-2*a* is an example of **base bias,** which means setting up a *fixed value of base current.* For instance, if $R_B = 1\ \text{M}\Omega$, the base current is 14.3 μA (second approximation). Even with transistor replacements and temperature changes, the base current remains fixed at approximately 14.3 μA under all operating conditions.

If $\beta_{dc} = 100$ in Fig. 7-2*a*, the collector current is approximately 1.43 mA and the collector-emitter voltage is:

$$V_{CE} = V_{CC} - I_C R_C = 15\ \text{V} - (1.43\ \text{mA})(3\ \text{k}\Omega) = 10.7\ \text{V}$$

Therefore, the quiescent or Q point in Fig. 7-2*a* is:

$$I_C = 1.43\ \text{mA} \qquad \text{and} \qquad V_{CE} = 10.7\ \text{V}$$

Graphical Solution

We can also find the Q point using a graphical solution based on the transistor **load line,** a graph of I_C versus V_{CE}. In Fig. 7-2*a*, the collector-emitter voltage is given by:

$$V_{CE} = V_{CC} - I_C R_C$$

Solving for I_C gives:

$$I_C = \frac{V_{CC} - V_{CE}}{R_C} \tag{7-1}$$

If we graph this equation (I_C versus V_{CE}), we will get a straight line. This line is called the *load line* because it represents the effect of the load on I_C and V_{CE}.

For instance, substituting the values of Fig. 7-2*a* into Eq. (7-1) gives:

$$I_C = \frac{15\ \text{V} - V_{CE}}{3\ \text{k}\Omega}$$

Figure 7-2 Base bias. (*a*) Circuit; (*b*) load line.

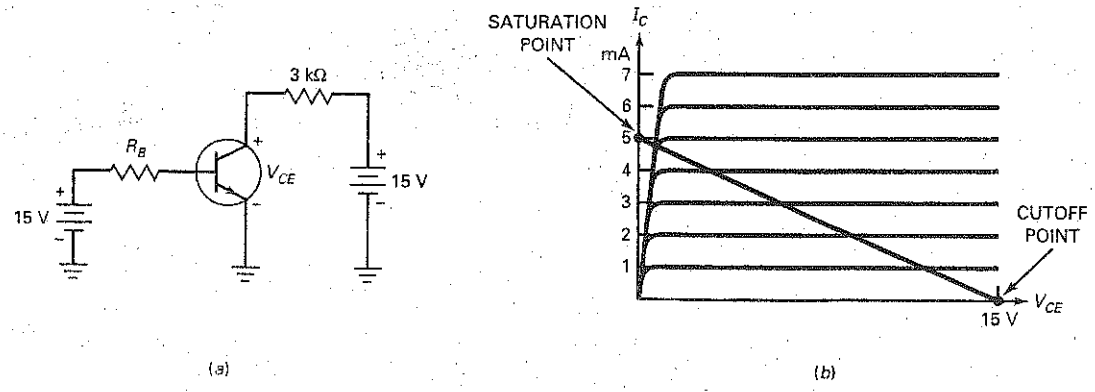

This equation is a linear equation; that is, its graph is a straight line. (*Note:* A *linear equation* is any equation that can be reduced to the standard form of $y = mx + b$.) If we graph the foregoing equation on top of the collector curves, we get Fig. 7-2*b*.

The ends of the load line are the easiest to find. When $V_{CE} = 0$ in the load-line equation (the foregoing equation):

$$I_C = \frac{15\text{ V}}{3\text{ k}\Omega} = 5\text{ mA}$$

The values, $I_C = 5$ mA and $V_{CE} = 0$, plot as the upper end of the load line in Fig. 7-2*b*.

When $I_C = 0$, the load-line equation gives:

$$0 = \frac{15\text{ V} - V_{CE}}{3\text{ k}\Omega}$$

or

$$V_{CE} = 15\text{ V}$$

The coordinates, $I_C = 0$ and $V_{CE} = 15$ V plot as the lower end of the load line in Fig. 7-2*b*.

Visual Summary of All Operating Points

Why is the load line useful? Because it contains every possible operating point for the circuit. Stated another way, when the base resistance varies from zero to infinity, it causes I_B to vary, which makes I_C and V_{CE} to vary over their entire ranges. If you plot the I_C and V_{CE} values for every possible I_B value, you will get the load line. Therefore, the load line is a visual summary of *all the possible transistor operating points.*

The Saturation Point

When the base resistance is too small, there is too much collector current, and the collector-emitter voltage drops to approximately zero. In this case, the transistor goes into *saturation.* This means that the collector current has increased to its maximum possible value.

The **saturation point** is the point in Fig. 7-2*b* where the load line intersects the saturation region of the collector curves. Because the collector-emitter voltage V_{CE} at saturation is very small, the saturation point is almost touching the upper end of the load line. From now on, we will approximate the saturation point as the upper end of the load line, bearing in mind that there is a slight error.

The saturation point tells you the maximum possible collector current for the circuit. For instance, the transistor of Fig. 7-3*a* goes into saturation when the collector current is approximately 5 mA. At this current, V_{CE} has decreased to approximately zero.

There is an easy way to find the current at the saturation point. Visualize a short between the collector and emitter to get Fig. 7-3*b*. Then V_{CE} drops to zero. All the 15 V from the collector supply will be across the 3 kΩ. Therefore, the current is:

$$I_C = \frac{15\text{ V}}{3\text{ k}\Omega} = 5\text{ mA}$$

You can apply this "mental short" method to any base-biased circuit.

Here is the formula for the saturation current in base-biased circuits:

$$I_{C(sat)} = \frac{V_{CC}}{R_C} \tag{7-2}$$

GOOD TO KNOW

When a transistor is saturated, further increases in base current produce no further increases in collector current.

Figure 7-3 Finding the ends of the load line. (*a*) Circuit; (*b*) calculating collector saturation current; (*c*) calculating collector-emitter cutoff voltage.

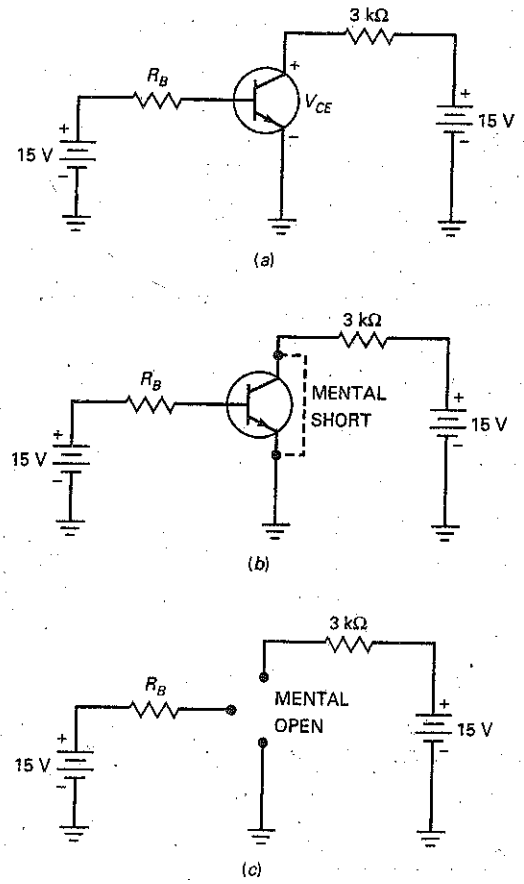

This says that the maximum value of the collector current equals the collector supply voltage divided by the collector resistance. It is nothing more than Ohm's law applied to the collector resistor. Figure 7-3*b* is a visual reminder of this equation.

The Cutoff Point

GOOD TO KNOW

A transistor is cut off when its collector current is zero.

The **cutoff point** is the point at which the load line intersects the cutoff region of the collector curves in Fig. 7-2*b*. Because the collector current at cutoff is very small, the cutoff point almost touches the lower end of the load line. From now on, we will approximate the cutoff point as the lower end of the load line.

The cutoff point tells you the maximum possible collector-emitter voltage for the circuit. In Fig. 7-3*a*, the maximum possible V_{CE} is approximately 15 V, the collector supply voltage.

There is a simple process for finding the cutoff voltage. Visualize the transistor of Fig. 7-3*a* as an open between the collector and the emitter (see Fig. 7-3*c*). Since there is no current through the collector resistor for this open condition, all the 15 V from the collector supply will appear between the collector-emitter terminals. Therefore, the voltage between the collector and the emitter will equal 15 V:

$$V_{CE(\text{cutoff})} = V_{CC} \tag{7-3}$$

Example 7-1

What are the saturation current and the cutoff voltage in Fig. 7-4*a*?

SOLUTION Visualize a short between the collector and emitter. Then:

$$I_{C(\text{sat})} = \frac{30\text{ V}}{3\text{ k}\Omega} = 10\text{ mA}$$

Next, visualize the collector-emitter terminals open. In this case:

$$V_{CE(\text{cutoff})} = 30\text{ V}$$

Figure 7-4 Load lines when collector resistance is the same. (*a*) With a collector supply of 30 V; (*b*) with a collector supply of 9 V; (*c*) load lines have same slope.

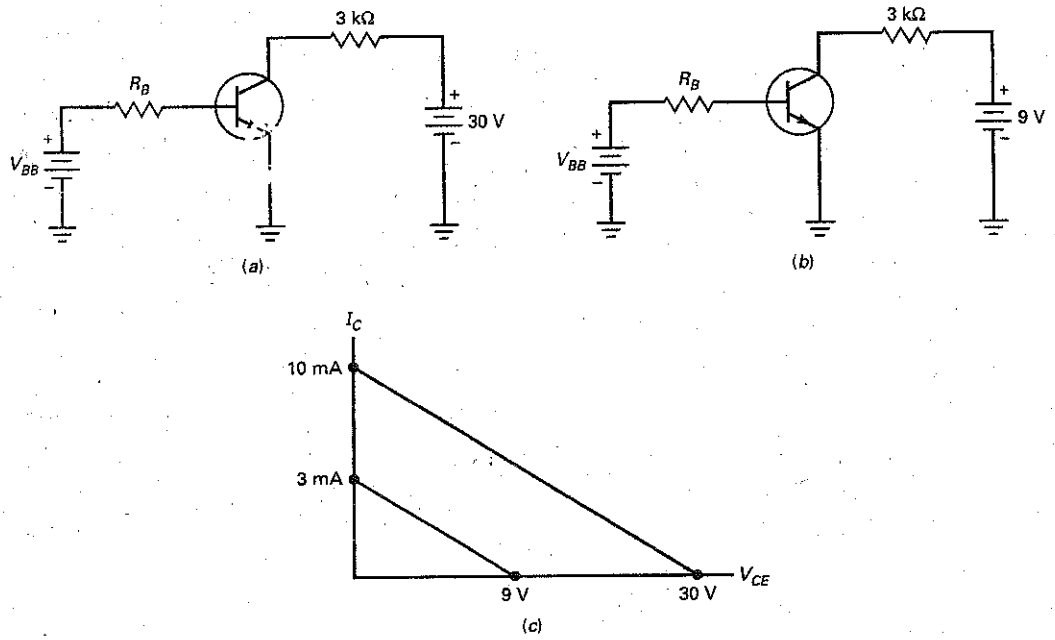

Example 7-2

Calculate the saturation and cutoff values for Fig. 7-4*b*. Draw the load lines for this and the preceding example.

SOLUTION With a mental short between the collector and emitter:

$$I_{C(\text{sat})} = \frac{9\text{ V}}{3\text{ k}\Omega} = 3\text{ mA}$$

A mental open between the collector and emitter gives:

$$V_{CE(\text{cutoff})} = 9\text{ V}$$

Figure 7-4*c* shows the two load lines. Changing the collector supply voltage while keeping the same collector resistance produces two load lines of the same slope but with different saturation and cutoff values.

PRACTICE PROBLEM 7-2 Find the saturation current and cutoff voltage of Fig. 7-2*a* if the collector resistor is 2 kΩ and V_{CC} is 12 V.

Example 7-3

MultiSim

What are the saturation current and the cutoff voltage in Fig. 7-5*a*?

SOLUTION The saturation current is:

$$I_{C(sat)} = \frac{15\text{ V}}{1\text{ k}\Omega} = 15\text{ mA}$$

The cutoff voltage is:

$$V_{CE(cutoff)} = 15\text{ V}$$

Figure 7-5 Load lines when collector voltage is the same. (*a*) With a collector resistance of 1 kΩ; (*b*) with a collector resistance of 3 kΩ; (*c*) smaller R_C produces steeper slope.

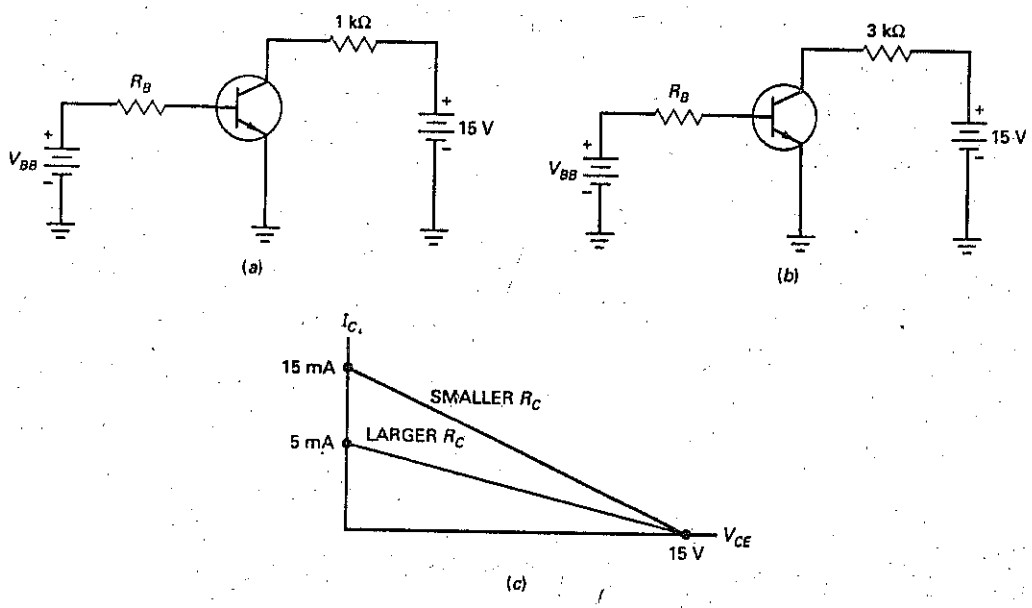

Example 7-4

Calculate the saturation and cutoff values for Fig. 7-5*b*. Then, compare the load lines for this and the preceding example.

SOLUTION The calculations are as follows:

$$I_{C(sat)} = \frac{15\text{ V}}{3\text{ k}\Omega} = 5\text{ mA}$$

and

$$V_{CE(cutoff)} = 15 \text{ V}$$

Figure 7-5*c* shows the two load lines. Changing the collector resistor with the same collector supply voltage produces load lines of different slopes but the same cutoff values. Also, notice that a smaller collector resistance produces a larger slope (steeper or closer to vertical). This happens because the slope of the load line is equal to the reciprocal of the collector resistance:

$$\text{Slope} = \frac{1}{R_C}$$

PRACTICE PROBLEM 7-4 Using Fig. 7-5*b*, what happens to the circuit's load line if the collector resistor is changed to 5 kΩ?

7-3 The Operating Point

Every transistor circuit has a load line. Given any circuit, work out the saturation current and the cutoff voltage. These values are plotted on the vertical and horizontal axes. Then draw a line through these two points to get the load line.

Plotting the *Q* Point

Figure 7-6*a* shows a base-biased circuit with a base resistance of 500 kΩ. We get the saturation current and cutoff voltage by the process given earlier. First, visualize a short across the collector-emitter terminals. Then all the collector supply voltage appears across the collector resistor, which means that the saturation current is 5 mA. Second, visualize the collector-emitter terminals open. Then there is no current, and all the supply voltage appears across the collector-emitter terminals, which means that the cutoff voltage is 15 V. If we plot the saturation current and cutoff voltage, we can draw the load line shown in Fig. 7-6*b*.

Figure 7-6 Calculating the *Q* point. (*a*) Circuit; (*b*) change in current gain changes *Q* point.

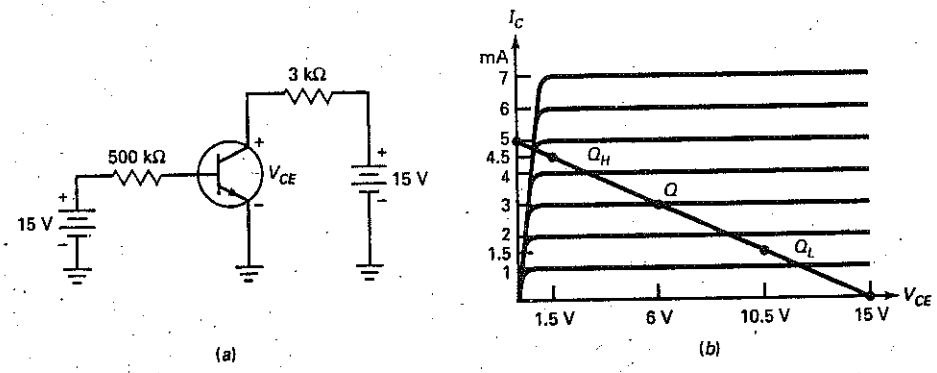

Let us keep the discussion simple for now by assuming an ideal transistor. This means that all the base supply voltage will appear across the base resistor. Therefore, the base current is:

$$I_B = \frac{15\text{ V}}{500\text{ k}\Omega} = 30\ \mu\text{A}$$

We cannot proceed until we have a value for the current gain. Suppose the current gain of the transistor is 100. Then the collector current is:

$$I_C = 100(30\ \mu\text{A}) = 3\text{ mA}$$

This current flowing through 3 kΩ produces a voltage of 9 V across the collector resistor. When we subtract this from the collector supply voltage, we get the voltage across the transistor. Here are the calculations:

$$V_{CE} = 15\text{ V} - (3\text{ mA})(3\text{ k}\Omega) = 6\text{ V}$$

By plotting 3 mA and 6 V (the collector current and voltage), we get the operating point shown on the load line of Fig. 7-6*b*. The operating point is labeled Q because this point is often called the **quiescent point.** (*Quiescent* means quiet, still, or resting.)

Why the *Q* Point Varies

We assumed a current gain of 100. What happens if the current gain is 50? If it is 150? To begin, the base current remains the same because the current gain has no effect on the base current. Ideally, the base current is fixed at 30 μA. When the current gain is 50:

$$I_C = 50(30\ \mu\text{A}) = 1.5\text{ mA}$$

and the collector-emitter voltage is:

$$V_{CE} = 15\text{ V} - (1.5\text{ mA})(3\text{ k}\Omega) = 10.5\text{ V}$$

Plotting the values gives the low point Q_L shown in Fig. 7-6*b*.

If the current gain is 150, then:

$$I_C = 150(30\ \mu\text{A}) = 4.5\text{ mA}$$

and the collector-emitter voltage is:

$$V_{CE} = 15\text{ V} - (4.5\text{ mA})(3\text{ k}\Omega) = 1.5\text{ V}$$

Plotting these values gives the high point Q_H point shown in Fig. 7-6*b*.

The three Q points of Fig. 7-6*b* illustrate how sensitive the operating point of a base-biased transistor is to changes in β_{dc}. When the current gain varies from 50 to 150, the collector current changes from 1.5 to 4.5 mA. If the changes in current gain were much greater, the operating point could be driven easily into saturation or cutoff. In this case, an amplifying circuit would become useless because of the loss of current gain outside the active region.

GOOD TO KNOW

Because the values of I_C and V_{CE} are dependent on the values of beta in a base-biased circuit, the circuit is said to be *beta-dependent.*

The Formulas

The formulas for calculating the Q point are as follows:

$$I_B = \frac{V_{BB} - V_{BE}}{R_B} \tag{7-4}$$

$$I_C = \beta_{dc} I_B \tag{7-5}$$

$$V_{CE} = V_{CC} - I_C R_C \tag{7-6}$$

Example 7-5

MultiSim

Suppose the base resistance of Fig. 7-6*a* is increased to 1 MΩ. What happens to the collector-emitter voltage if β_{dc} is 100?

SOLUTION Ideally, the base current would decrease to 15 μA, the collector current would decrease to 1.5 mA, and the collector-emitter voltage would increase to:

$$V_{CE} = 15 - (1.5\text{ mA})(3\text{ k}\Omega) = 10.5\text{ V}$$

To a second approximation, the base current would decrease to 14.3 μA, and the collector current would decrease to 1.43 mA. The collector-emitter voltage would increase to:

$$V_{CE} = 15 - (1.43\text{ mA})(3\text{ k}\Omega) = 10.7\text{ V}$$

PRACTICE PROBLEM 7-5 If the β_{dc} value of Example 7-5 changed to 150 due to a temperature change, find the new value of V_{CE}.

7-4 Recognizing Saturation

There are two basic kinds of transistor circuits: **amplifying** and **switching.** With amplifying circuits, the *Q* point must remain in the active region under all operating conditions. If it does not, the output signal will be distorted on the peak when saturation or cutoff occurs. With switching circuits, the *Q* point usually switches between saturation and cutoff. How switching circuits work, what they do, and why they are used will be discussed later.

Impossible Answers

Assume that the transistor of Fig. 7-7*a* has a breakdown voltage greater than 20 V. Then, we know that it is not operating in the breakdown region. Furthermore, we can tell at a glance that the transistor is not operating in the cutoff region because of the biasing voltages. What is not immediately clear, however, is whether the transistor is operating in the active region or the saturation region. It must be operating in one of these regions. But which?

Figure 7-7 (*a*) Base-biased circuit; (*b*) load line.

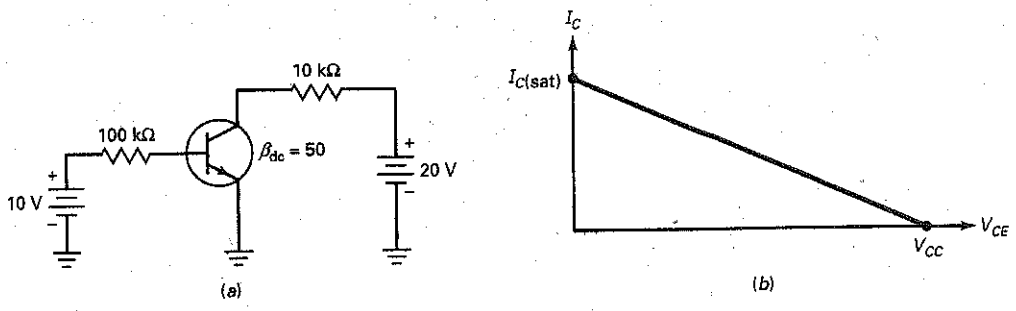

Troubleshooters and designers often use the following method to determine whether a transistor is operating in the active region or the saturation region. Here are the steps in using the method:

1. Assume that the transistor is operating in the active region.
2. Carry out the calculations for currents and voltages.
3. If an impossible result occurs in any calculation, the assumption is false.

An impossible answer means that the transistor is saturated. Otherwise, the transistor is operating in the active region.

Saturation-Current Method

For instance, Fig. 7-7*a* shows a base-biased circuit. Start by calculating the saturation current:

$$I_{C(sat)} = \frac{20\text{ V}}{10\text{ k}\Omega} = 2\text{ mA}$$

The base current is ideally 0.1 mA. Assuming a current gain of 50 as shown, the collector current is:

$$I_C = 50(0.1\text{ mA}) = 5\text{ mA}$$

The answer is impossible because the collector current cannot be greater than the saturation current. Therefore, the transistor cannot be operating in the active region; it must be operating in the saturation region.

Collector-Voltage Method

Suppose you want to calculate V_{CE} in Fig. 7-7*a*. Then you can proceed like this: The base current is ideally 0.1 mA. Assuming a current gain of 50 as shown, the collector current is:

$$I_C = 50(0.1\text{ mA}) = 5\text{ mA}$$

and the collector-emitter voltage is:

$$V_{CE} = 20\text{ V} - (5\text{ mA})(10\text{ k}\Omega) = -30\text{ V}$$

This result is impossible because the collector-emitter voltage cannot be negative. So the transistor cannot be operating in the active region; it must be operating in the saturation region.

Current Gain Is Less in Saturation Region

When you are given the current gain, it is usually for the active region. For instance, the current gain of Fig. 7-7*a* is shown as 50. This means that the collector current will be 50 times the base current, provided the transistor is operating in the active region.

When a transistor is saturated, the current gain is less than the current gain in the active region. You can calculate the saturated current gain as follows:

$$\beta_{dc(sat)} = \frac{I_{C(sat)}}{I_B}$$

In Fig. 7-7*a*, the saturated current gain is

$$\beta_{dc(sat)} = \frac{2\text{ mA}}{0.1\text{ mA}} = 20$$

Hard Saturation

A designer who wants a transistor to operate in the saturation region under all conditions often selects a base resistance that produces a current gain of 10. This is called **hard saturation,** because there is more than enough base current to saturate the transistor. For example, a base resistance of 50 kΩ in Fig. 7-7*a* will produce a current gain of:

$$\beta_{dc} = \frac{2\text{ mA}}{0.2\text{ mA}} = 10$$

For the transistor of Fig. 7-7*a*, it takes only

$$I_B = \frac{2\text{ mA}}{50} = 0.04\text{ mA}$$

to saturate the transistor. Therefore, a base current of 0.2 mA will drive the transistor deep into saturation.

Why does a designer use hard saturation? Recall that the current gain changes with collector current, temperature variation, and transistor replacement. To make sure that the transistor does not slip out of saturation at low collector currents, low temperatures, and so on, the designer uses hard saturation to ensure transistor saturation under all operating conditions.

From now on, *hard saturation* will refer to any design that makes the saturated current gain approximately 10. **Soft saturation** will refer to any design in which the transistor is barely saturated, that is, in which the saturated current gain is only a little less than the active current gain.

Recognizing Hard Saturation at a Glance

Here is how you can quickly tell whether a transistor is in hard saturation. Often, the base supply voltage and the collector supply voltage are equal: $V_{BB} = V_{CC}$. When this is the case, a designer will use the 10 : 1 rule, which says to make the base resistance approximately 10 times as large as the collector resistance.

Figure 7-8*a* was designed by using the 10 : 1 rule. Therefore, whenever you see a circuit with a 10 : 1 ratio (R_B to R_C), you can expect it to be saturated.

Figure 7-8 (*a*) Hard saturation; (*b*) load line.

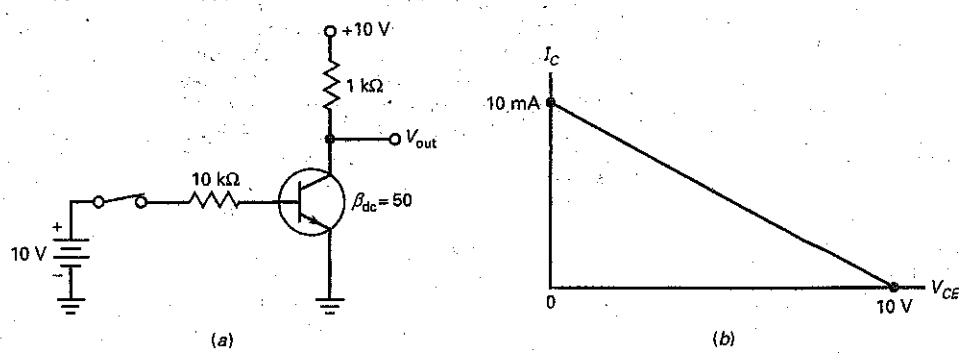

Example 7-6

Suppose the base resistance of Fig. 7-7*a* is increased to 1 MΩ. Is the transistor still saturated?

SOLUTION Assume the transistor is operating in the active region, and see whether a contradiction arises. Ideally, the base current is 10 V divided by 1 MΩ, or 10 μA. The collector current is 50 times 10 μA, or 0.5 mA. This current produces 5 V across the collector resistor. Subtract 5 from 20 V to get:

$$V_{CE} = 15 \text{ V}$$

There is no contradiction here. If the transistor were saturated, we would have calculated a negative number or, at most, 0 V. Because we got 15 V, we know that the transistor is operating in the active region.

Example 7-7

Suppose the collector resistance of Fig. 7-7*a* is decreased to 5 kΩ. Does the transistor remain in the saturation region?

SOLUTION Assume the transistor is operating in the active region, and see whether a contradiction arises. We can use the same approach as in Example 7-6, but for variety, let us try the second method.

Start by calculating the saturation value of the collector current. Visualize a short between the collector and the emitter. Then you can see that 20 V will be across 5 kΩ. This gives a saturated collector current of:

$$I_{C(sat)} = 4 \text{ mA}$$

The base current is ideally 10 V divided by 100 kΩ, or 0.1 mA. The collector current is 50 times 0.1 mA, or 5 mA.

There is a contradiction. The collector current cannot be greater than 4 mA because the transistor saturates when $I_C = 4$ mA. The only thing that can change at this point is the current gain. The base current is still 0.1 mA, but the current gain decreases to:

$$\beta_{dc(sat)} = \frac{4 \text{ mA}}{0.1 \text{ mA}} = 40$$

This reinforces the idea discussed earlier. A transistor has two current gains, one in the active region and another in the saturation region. The second is equal to or smaller than the first.

PRACTICE PROBLEM 7-7 If the collector resistance of Fig. 7-7*a* is 4.7 kΩ, what value of base resistor would produce hard saturation using the 10:1 design rule?

7-5 The Transistor Switch

Base bias is useful in *digital circuits* because these circuits are usually designed to operate at saturation and cutoff. Because of this, they have either low output voltage or high output voltage. In other words, none of the *Q* points between saturation

and cutoff are used. For this reason, variations in the Q point don't matter, because the transistor remains in saturation or cutoff when the current gain changes.

Here is an example of using a base-biased circuit to switch between saturation and cutoff. Figure 7-8*a* shows an example of a transistor in hard saturation. Therefore, the output voltage is approximately 0 V. This means the Q point is at the upper end of the load line (Fig. 7-8*b*).

When the switch opens, the base current drops to zero. Because of this, the collector current drops to zero. With no current through the 1 kΩ, all the collector supply voltage will appear across the collector-emitter terminals. Therefore, the output voltage rises to +10 V. Now, the Q point is at the lower end of load line (see Fig. 7-8*b*).

The circuit can have only two output voltages: 0 or +10 V. This is how you can recognize a digital circuit. It has only two output levels: low or high. The exact values of the two output voltages are not important. All that matters is that you can distinguish the voltages as low or high.

Digital circuits are often called *switching circuits* because their Q point switches between two points on the load line. In most designs, the two points are saturation and cutoff. Another name often used is **two-state circuits,** referring to the low and high outputs.

Example 7-8

The collector supply voltage of Fig. 7-8*a* is decreased to 5 V. What are the two values of the output voltage? If the saturation voltage $V_{CE(sat)}$ is 0.15 V and the collector leakage current I_{CEO} is 50 nA, what are the two values of the output voltage?

SOLUTION The transistor switches between saturation and cutoff. Ideally, the two values of output voltage are 0 and 5 V. The first voltage is the voltage across the saturated transistor, and the second voltage is the voltage across the cutoff transistor.

If you include the effects of saturation voltage and collector leakage current, the output voltages are 0.15 and 5 V. The first voltage is the voltage across the saturated transistor, which is given as 0.15 V. The second voltage is the collector-emitter voltage with 50 nA flowing through 1 kΩ:

$$V_{CE} = 5\text{ V} - (50\text{ nA})(1\text{ k}\Omega) = 4.99995\text{ V}$$

which rounds to 5 V.

Unless you are a designer, it is a waste of time to include the saturation voltage and the leakage current in your calculations of switching circuits. With switching circuits, all you need is two distinct voltages: one low and the other high. It doesn't matter whether the low voltage is 0, 0.1, 0.15 V, and so on. Likewise, it doesn't matter whether the high voltage is 5, 4.9, or 4.5 V. All that usually matters in the analysis of switching circuits is that you can distinguish the low voltage from the high voltage.

PRACTICE PROBLEM 7-8 If the circuit of Fig. 7-8*a* used 12 V for its collector and base supply voltage, what are the two values of switched output voltage? ($V_{CE(sat)} = 0.15$ V and $I_{CEO} = 50$ nA)

7-6 Emitter Bias

Digital circuits are the type of circuits used in computers. In this area, base bias and circuits derived from base bias are useful. But when it comes to amplifiers, we need circuits whose Q points are immune to changes in current gain.

Figure 7-9 shows **emitter bias.** As you can see, the resistor has been moved from the base circuit to the emitter circuit. That one change makes all the difference in the world. The Q point of this new circuit is now rock-solid. When the current gain changes from 50 to 150, the Q point shows almost no movement along the load line.

Basic Idea

The base supply voltage is now applied directly to the base. Therefore, a troubleshooter will read V_{BB} between the base and ground. The emitter is no longer grounded. Now the emitter is above the ground and has a voltage given by:

$$V_E = V_{BB} - V_{BE} \tag{7-7}$$

If V_{BB} is more than 20 times V_{BE}, the ideal approximation will be accurate. If V_{BB} is less than 20 times V_{BE}, you may want to use the second approximation. Otherwise your error will be more than 5 percent.

Finding the Q Point

Let us analyze the emitter-biased circuit of Fig. 7-10. The base supply voltage is only 5 V, so we use the second approximation. The voltage between the base and ground is 5 V. From now on, we refer to this base-to-ground voltage as the *base voltage,* or V_B. The voltage across the base-emitter terminals is 0.7 V. We refer to this voltage as the *base-emitter voltage,* or V_{BE}.

Figure 7-9 Emitter bias.

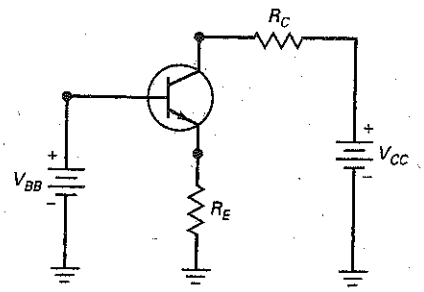

Figure 7-10 Finding the Q point.

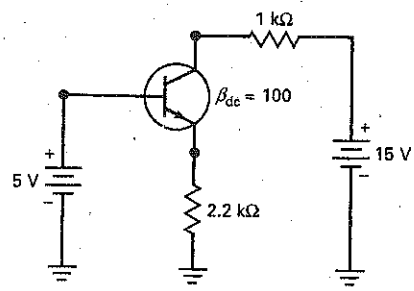

The voltage between the emitter and ground is called the *emitter voltage.* It equals:

$$V_E = 5\text{ V} - 0.7\text{ V} = 4.3\text{ V}$$

This voltage is across the emitter resistance, so we can use Ohm's law to find the emitter current:

$$I_E = \frac{4.3\text{ V}}{2.2\text{ k}\Omega} = 1.95\text{ mA}$$

This means that the collector current is 1.95 mA to a close approximation. When this collector current flows through the collector resistor, it produces a voltage drop of 1.95 V. Subtracting this from the collector supply voltage gives the voltage between the collector and ground:

$$V_C = 15\text{ V} - (1.95\text{ mA})(1\text{ k}\Omega) = 13.1\text{ V}$$

From now on, we will refer to this collector-to-ground voltage as the *collector voltage.*

This is the voltage a troubleshooter would measure when testing a transistor circuit. One lead of the voltmeter would be connected to the collector, and the other lead would be connected to ground. If you want the collector-emitter voltage, you have to subtract the emitter voltage from the collector voltage as follows:

$$V_{CE} = 13.1\text{ V} - 4.3\text{ V} = 8.8\text{ V}$$

So, the emitter-biased circuit of Fig. 7-10 has a Q point with these coordinates: $I_C = 1.95$ mA and $V_{CE} = 8.8$ V.

The collector-emitter voltage is the voltage used for drawing load lines and for reading transistor data sheets. As a formula:

$$V_{CE} = V_C - V_E \tag{7-8}$$

Circuit Is Immune to Changes in Current Gain

Here is why emitter bias excels. The Q point of an emitter-biased circuit is immune to changes in current gain. The proof lies in the process used to analyze the circuit. Here are the steps we used earlier:

1. Get the emitter voltage.
2. Calculate the emitter current.
3. Find the collector voltage.
4. Subtract the emitter from the collector voltage to get V_{CE}.

At no time do we need to use the current gain in the foregoing process. Since we don't use it to find the emitter current, collector current, and so on, the exact value of current gain no longer matters.

By moving the resistor from the base to the emitter circuit, we force the base-to-ground voltage to equal the base supply voltage. Before, almost all this supply voltage was across the base resistor, setting up a *fixed base current.* Now, all this supply voltage minus 0.7 V is across the emitter resistor, setting up a *fixed emitter current.*

GOOD TO KNOW

Because the values of I_C and V_{CE} are not affected by the value of beta in an emitter-biased circuit, this type of circuit is said to be *beta-independent.*

Minor Effect of Current Gain

The current gain has a minor effect on the collector current. Under all operating conditions, the three currents are related by:

$$I_E = I_C + I_B$$

which can be rearranged as:

$$I_E = I_C + \frac{I_C}{\beta_{dc}}$$

Solve this for the collector current, and you get:

$$I_C = \frac{\beta_{dc}}{\beta_{dc} + 1} I_E \tag{7-9}$$

The quantity that multiplies I_E is called a **correction factor.** It tells you how I_C differs from I_E. When the current gain is 100, the correction factor is:

$$\frac{\beta_{dc}}{\beta_{dc} + 1} = \frac{100}{100 + 1} = 0.99$$

This means that the collector current is equal to 99 percent of the emitter current. Therefore, we get only a 1 percent error when we ignore the correction factor and say that the collector current equals the emitter current.

Example 7-9

MultiSim

What is the voltage between the collector and ground in the MultiSim Fig. 7-11? Between the collector and the emitter?

SOLUTION The base voltage is 5 V. The emitter voltage is 0.7 V less than this, or:

$$V_E = 5\text{ V} - 0.7\text{ V} = 4.3\text{ V}$$

MultiSim **Figure 7-11** Meter Values.

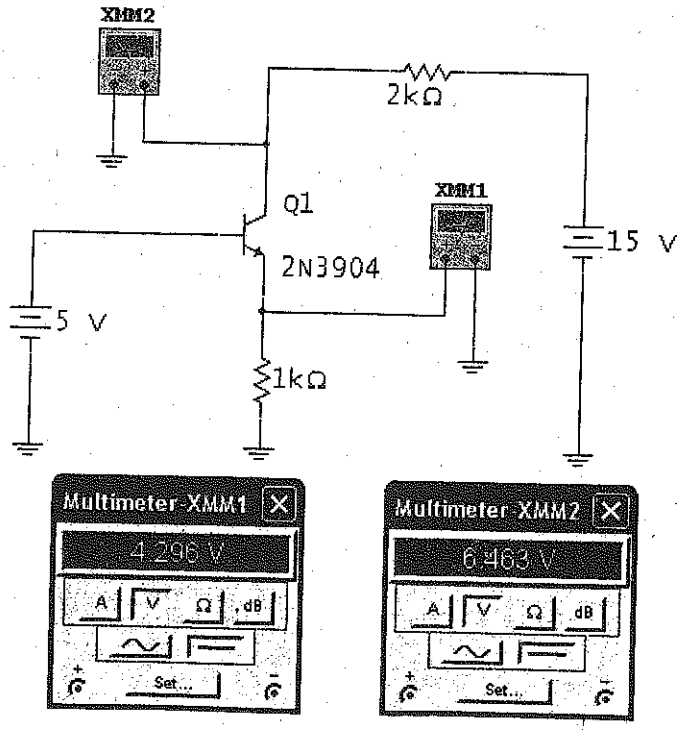

This voltage is across the emitter resistance, which is now 1 kΩ. Therefore, the emitter current is 4.3 V divided by 1 kΩ, or:

$$I_E = \frac{4.3\text{ V}}{1\text{ k}\Omega} = 4.3\text{ mA}$$

The collector current is approximately equal to 4.3 mA. When this current flows through the collector resistance (now 2 kΩ), it produces a voltage of:

$$I_C R_C = (4.3\text{ mA})(2\text{ k}\Omega) = 8.6\text{ V}$$

When you subtract this voltage from the collector supply voltage, you get:

$$V_C = 15\text{ V} - 8.6\text{ V} = 6.4\text{ V}$$

This voltage value is very close to the value measured by the MultiSim meter. Remember, this is the voltage between the collector and ground. This is what you would measure when troubleshooting.

Unless you have a voltmeter with a high input resistance and a floating ground lead, you should not attempt to connect a voltmeter directly between the collector and the emitter because this may short the emitter to ground. If you want to know the value of V_{CE}, you should measure the collector-to-ground voltage, then measure the emitter-to-ground voltage, and subtract the two. In this case:

$$V_{CE} = 6.4\text{ V} - 4.3\text{ V} = 2.1\text{ V}$$

PRACTICE PROBLEM 7-9 MultiSim Decrease the base supply voltage of Fig. 7-11 to 3 V. Predict and measure the new value of V_{CE}.

7-7 LED Drivers

You have learned that base-biased circuits set up a fixed value of base current, and emitter-biased circuits set up a fixed value of emitter current. Because of the problem with current gain, base-biased circuits are normally designed to switch between saturation and cutoff, whereas emitter-biased circuits are usually designed to operate in the active region.

In this section, we discuss two circuits that can be used as LED drivers. The first circuit uses base bias, and the second circuit uses emitter bias. This will give you a chance to see how each circuit performs in the same application.

Base-Biased LED Driver

The base current is zero in Fig. 7-12*a*, which means that the transistor is at cutoff. When the switch of Fig. 7-12*a* closes, the transistor goes into hard saturation. Visualize a short between the collector-emitter terminals. Then the collector supply voltage (15 V) appears across the series connection of the 1.5 kΩ and the LED. If we ignore the voltage drop across the LED, the collector current is ideally 10 mA. But if we allow 2 V across the LED, then there is 13 V across the 1.5 kΩ, and the collector current is 13 V divided by 1.5 kΩ, or 8.67 mA.

Figure 7-12 (*a*) Base-biased; (*b*) emitter-biased.

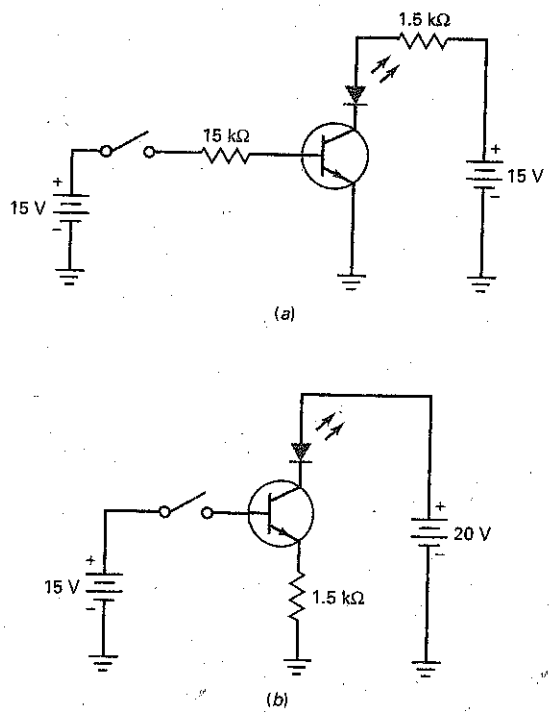

There is nothing wrong with this circuit. It makes a fine LED driver because it is designed for hard saturation, where the current gain doesn't matter. If you want to change the LED current in this circuit, you can change either the collector resistance or the collector supply voltage. The base resistance is made 10 times larger than the collector resistance because we want hard saturation when the switch is closed.

Emitter-Biased LED Driver

The emitter current is zero in Fig. 7-12*b*, which means that the transistor is at cutoff. When the switch of Fig. 7-12*b* closes, the transistor goes into the active region. Ideally, the emitter voltage is 15 V. This means that we get an emitter current of 10 mA. This time, the LED voltage drop has no effect. It doesn't matter whether the exact LED voltage is 1.8, 2, or 2.5 V. This is an advantage of the emitter-biased design over the base-biased design. The LED current is independent of the LED voltage. Another advantage is that the circuit doesn't require a collector resistor.

The emitter-biased circuit of Fig. 7-12*b* operates in the active region when the switch is closed. To change the LED current, you can change the base supply voltage or the emitter resistance. For instance, if you vary the base supply voltage, the LED current varies in direct proportion.

Example 7-10

We want 25 mA of LED current when the switch is closed in Fig. 7-12*b*. How can we do it?

SOLUTION One solution is to increase the base supply. We want 25 mA to flow through the emitter resistance of 1.5 kΩ. Ohm's law tells us that the emitter voltage has to be:

$$V_E = (25\text{ mA})(1.5\text{ k}\Omega) = 37.5\text{ V}$$

Ideally, $V_{BB} = 37.5$ V. To a second approximation, $V_{BB} = 38.2$ V. This is a bit high for typical power supplies. But the solution is workable if the particular application allows this high a supply voltage.

A supply voltage of 15 V is common in electronics. Therefore, a better solution in most applications is to decrease the emitter resistance. Ideally, the emitter voltage will be 15 V, and we want 25 mA through the emitter resistor. Ohm's law gives:

$$R_E = \frac{15\text{ V}}{25\text{ mA}} = 600\ \Omega$$

The nearest standard value with a tolerance of 5 percent is 620 Ω. If we use the second approximation, the resistance is:

$$R_E = \frac{14.3\text{ V}}{25\text{ mA}} = 572\ \Omega$$

The nearest standard value is 560 Ω.

PRACTICE PROBLEM 7-10 In Fig. 7-12*b*, what value of R_E is needed to produce an LED current of 21 mA?

Example 7-11

What does the circuit of Fig. 7-13 do?

Figure 7-13 Base-biased LED driver.

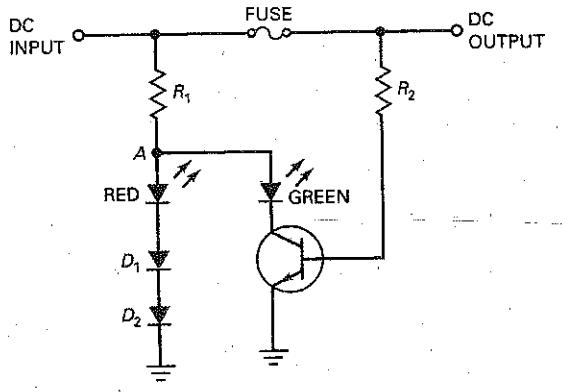

SOLUTION This is a blown-fuse indicator for a dc power supply. When the fuse is intact, the transistor is base-biased into saturation. This turns on the green LED to indicate that all is OK. The voltage between point A and ground is approximately 2 V. This voltage is not enough to run on the red LED. The two series diodes (D_1 and D_2) prevent the red LED from turning on because they require a drop of 1.4 V to conduct.

When the fuse blows, the transistor goes into cutoff, turning off the green LED. Then, the voltage of point A is pulled up toward the supply voltage. Now there is enough voltage to turn on the two series diodes and the red LED to indicate a blown fuse. Summary Table 7-1 illustrates the differences between base bias and emitter bias.

Summary Table 7-1 | Base Bias Vs. Emitter Bias

Circuit

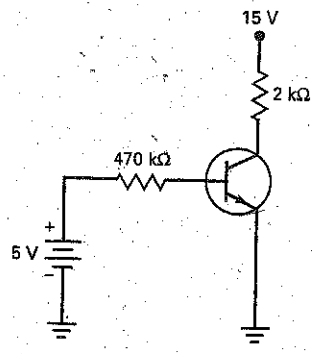

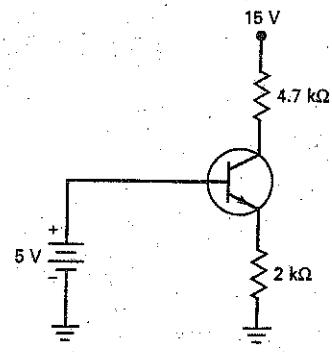

Characteristic	Fixed base current	Fixed emitter current
$\beta_{dc} = 100$	$I_B = 9.5\ \mu A$ $I_C = 915\ \mu A$	$I_B = 21.5\ \mu A$ $I_E = 2.15$ mA
$\beta_{dc} = 300$	$I_B = 9.15\ \mu A$ $I_C = 2.74$ mA	$I_B = 7.17\ \mu A$ $I_E = 2.15$ mA
Modes used	Cutoff and saturation	Active or linear
Applications	Switching/digital circuits	Controlled I_C drivers and amplifiers

7-8 The Effect of Small Changes

Earlier chapters introduced up-down analysis, which is helpful to anyone trying to understand circuits. For the up-down analysis of Fig. 7-14, a small change means a change of approximately 10 percent (the tolerance of some resistors).

For instance, Fig. 7-14 shows an emitter-biased circuit with these circuit values:

$$V_{BB} = 2\text{ V} \qquad V_{CC} = 15\text{ V} \qquad R_E = 130\ \Omega \qquad R_C = 470\ \Omega$$

Figure 7-14 Up-down analysis.

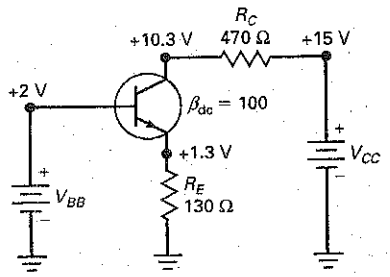

Table 7-1 Up-Down Analysis

	V_E	I_E	I_B	I_C	V_C	V_{CE}
V_{BB} increase	U	U	U	U	D	D
V_{CC} increase	N	N	N	N	U	U
R_E increase	N	D	D	D	U	U
R_C increase	N	N	N	N	D	D

These are the independent variables of the circuit (often called the *circuit values*) because their values are independent of one another; changing one of them has no effect on the others.

The remaining voltages and currents are as follows:

$$V_E = 1.3\text{ V} \quad V_C = 10.3\text{ V} \quad I_B = 99\ \mu\text{A} \quad I_C = 9.9\text{ mA} \quad I_E = 10\text{ mA}$$

Each of these is called a *dependent variable* because its value may change when one of the independent variables changes. If you really understand how a circuit works, you can tell whether a dependent variable will increase, decrease, or remain the same when an independent variable increases.

For instance, suppose V_{BB} increases by about 10 percent in Fig. 7-14. Will V_C increase, decrease, or remain the same? It will decrease. Why? Because an increase in the base supply voltage will increase the emitter current, increase the collector current, increase the voltage across the collector resistor, and decrease the collector voltage.

Table 7-1 shows the effects of small increases in the independent variables of Fig. 7-14. We use U for up, D for down, and N for no change (change of less than 1 percent). These results assume the second approximation. By studying this table and asking why the changes occur, you can improve your understanding of how this circuit works.

7-9 Troubleshooting

Many things can go wrong with a transistor. Since it contains two diodes, exceeding any of the breakdown voltages, maximum currents, or power ratings can damage either or both diodes. The troubles may include shorts, opens, high leakage currents, and reduced β_{dc}.

Figure 7-15 *npn* transistor.

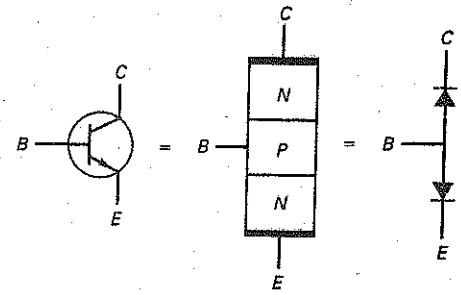

Out-of-Circuit Tests

A transistor is commonly tested using a DMM set to the diode test range. Figure 7-15 shows how an *npn* transistor resembles two back-to-back diodes. Each *pn* junction can be tested for normal forward and reverse biased readings. The collector to emitter can also be tested and should result in an overrange indication with either DMM polarity connection. Since a transistor has three leads, there are six DMM polarity connections possible. These are shown in Fig. 7-16*a*. Notice that only two polarity connections result in approximately a 0.7 V reading. Also important to note here is that the base lead is the only connection common to both 0.7 V readings and it requires a (+) polarity connection. This is also shown in Fig. 7-16*b*.

A *pnp* transistor can be tested using the same technique. As shown in Fig. 7-17, the *pnp* transistor also resembles two back-to-back diodes. Again, using the DMM in the diode test range, Fig. 7-18*a* and 7-18*b* show the results for a normal transistor.

Many DMMs have a special β_{dc} or h_{FE} test function. By placing the transistor's leads into the proper slots, the forward current gain is displayed. This current gain is for a specified base current or collector current and V_{CE}. You can check the DMM's manual for the specific test condition.

Another way to test transistors is with an ohmmeter. You can begin by measuring the resistance between the collector and the emitter. This should be very high in both directions because the collector and emitter diodes are back to

Figure 7-16 *NPN* DMM Readings (*a*) Polarity connections; (*b*) *pn* junction readings.

+	−	Reading
B	E	0.7
E	B	OL
B	C	0.7
C	B	OL
C	E	OL
E	C	OL

(*a*)

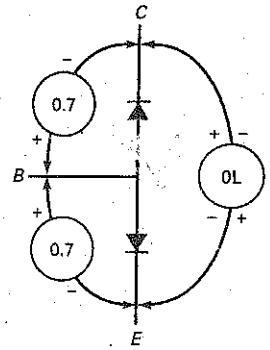

(*b*)

Figure 7-17 *PNP* transistor.

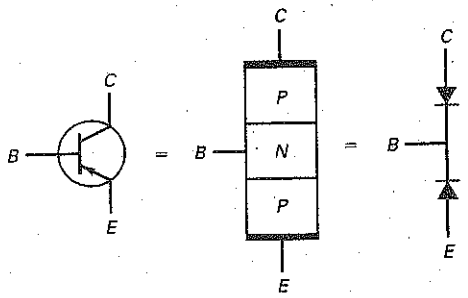

Figure 7-18 *PNP* DMM readings (*a*) polarity connections; (*b*) *pn* junction readings.

+	−	Readings
B	E	OL
E	B	0.7
B	C	OL
C	B	0.7
C	E	OL
E	C	OL

(*a*)

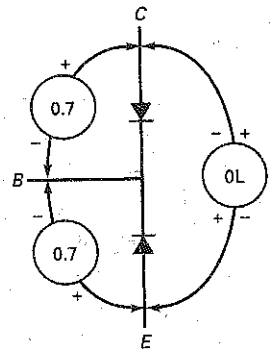

(*b*)

back in series. One of the most common troubles is a collector-emitter short, produced by exceeding the power rating. If you read zero to a few thousand ohms in either direction, the transistor is shorted and should be replaced.

Assuming that the collector-emitter resistance is very high in both directions (in megohms), you can read the reverse and forward resistances of the collector diode (collector-base terminals) and the emitter diode (base-emitter terminals). You should get a high reverse/forward ratio for both diodes, typically more than 1000 : 1 (silicon). If you do not, the transistor is defective.

Even if the transistor passes the ohmmeter tests, it still may have some faults. After all, the ohmmeter tests each transistor junction only under dc conditions. You can use a curve tracer to look for more subtle faults, such as too much leakage current, low β_{dc}, or insufficient breakdown voltage. A transistor being tested with a curve tracer is shown in Fig. 7-19. Commercial transistor testers are also available; these check the leakage current, current gain β_{dc}, and other quantities.

In-Circuit Tests

The simplest in-circuit tests are to measure transistor voltages with respect to ground. For instance, measuring the collector voltage V_C and the emitter voltage V_E is a good start. The difference $V_C - V_E$ should be more than 1 V but less than V_{CC}. If the reading is less than 1 V in an amplifier circuit, the transistor may be shorted. If the reading equals V_{CC}, the transistor may be open.

The foregoing test usually pins down a dc trouble if one exists. Many people include a test of V_{BE}, done as follows: Measure the base voltage V_B and the

Figure 7-19 Transistor curve tracer test courtesy of Tektronix.

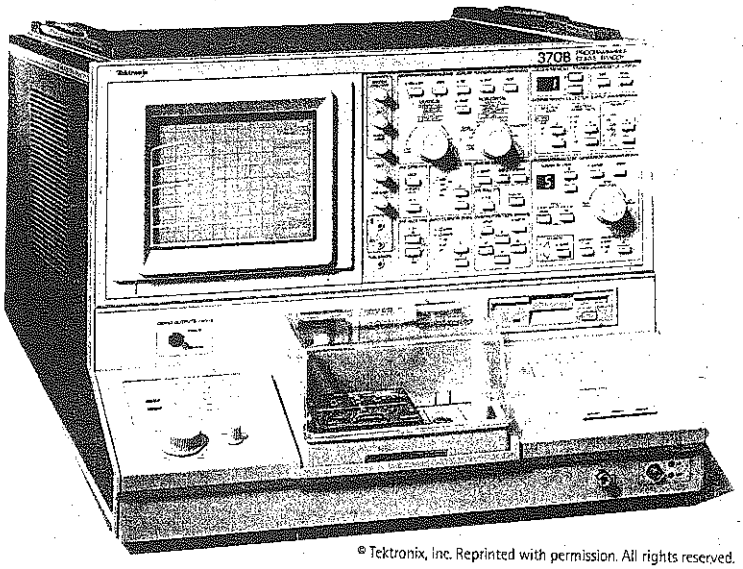

© Tektronix, Inc. Reprinted with permission. All rights reserved.

emitter voltage V_E. The difference of these readings is V_{BE}, which should be 0.6 to 0.7 V for small-signal transistors operating in the active region. For power transistors, V_{BE} may be 1 V or more because of the bulk resistance of the emitter diode. If the V_{BE} reading is less than approximately 0.6 V, the emitter diode is not being forward-biased. The trouble could be in the transistor or in the biasing components.

Some people include a cutoff test, performed as follows: Short the base-emitter terminals with a jumper wire. This removes the forward bias on the emitter diode and should force the transistor into cutoff. The collector-to-ground voltage should equal the collector supply voltage. If it does not, something is wrong with the transistor or the circuitry.

Care should be taken when doing this test. If another device or circuit is directly connected to the collector terminal, be sure that the increase in collector-to-ground voltage will not cause any damage.

A Table of Troubles

As discussed in Chap. 6, a shorted component is equivalent to a resistance of zero, and an open component is equivalent to a resistance of infinity. For instance, the emitter resistor may be shorted or open. Let us designate these troubles by R_{ES} and R_{EO}, respectively. Similarly, the collector resistor may be shorted or open, symbolized by R_{CS} and R_{CO}, respectively.

When a transistor is defective, anything can happen. For instance, one or both diodes may be internally shorted or open. We are going to limit the number of possibilities to the most likely defects as follows: a collector-emitter short (*CES*) will represent all three terminals shorted together (base, collector, and emitter), and a collector-emitter open (*CEO*) stands for all three terminals open. A base-emitter open (*BEO*) means that the base-emitter diode is open, and a collector-base open (*CBO*) means that the collector-base diode is open.

Table 7-2 shows a few of the troubles that could occur in a circuit like Fig. 7-20. The voltages were calculated by using the second approximation. When the circuit is operating normally, you should measure a base voltage of 2 V, an emitter voltage of 1.3 V, and a collector voltage of approximately 10.3 V. If the

Figure 7-20 (Repeated for reference.) Up-down analysis.

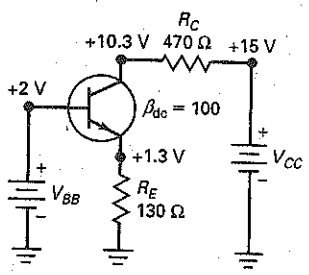

Table 7-2 Troubles and Symptoms

Trouble	V_B, V	V_E, V	V_C, V	Comments
None	2	1.3	10.3	No trouble
R_{ES}	2	0	15	Transistor destroyed (CEO)
R_{EO}	2	1.3	15	No base or collector current
R_{CS}	2	1.3	15	
R_{CO}	2	1.3	1.3	
No V_{BB}	0	0	15	Check supply and lead
No V_{CC}	2	1.3	1.3	Check supply and lead
CES	2	2	2	All transistor terminals shorted
CEO	2	0	15	All transistor terminals open
BEO	2	0	15	Base-emitter diode open
CBO	2	1.3	15	Collector-base diode open

emitter resistor were shorted, +2 V would appear across the emitter diode. This large voltage would destroy the transistor, possibly producing a collector-emitter open. This trouble R_{ES} and its voltages are shown in Table 7-2.

If the emitter resistor were open, there would be no emitter current. Furthermore, the collector current would be zero, and the collector voltage would increase to 15 V. This trouble R_{EO} and its voltages are shown in Table 7-2. Continuing like this, we can get the remaining entries of the table.

Notice the entry for no V_{CC}. This is worth commenting on. Your initial instinct might be that the collector voltage is zero, because there is no collector supply voltage. But that is not what you will measure with a voltmeter. When you connect a voltmeter between the collector and ground, the base supply will set up a small forward current through the collector diode in series with the voltmeter. Since the base voltage is fixed at 2 V, the collector voltage is 0.7 V less than this. Therefore, the voltmeter will read 1.3 V between the collector and ground. In other words, the voltmeter completes the circuit to ground because the voltmeter looks like a very large resistance in series with the collector diode.

Figure 7-21 (*a*) Transistor with open base; (*b*) equivalent circuit.

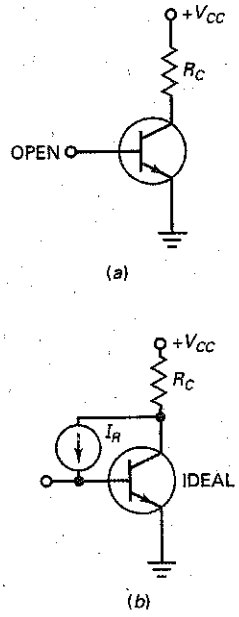

7-10 More Optoelectronic Devices

As mentioned earlier, a transistor with an open base has a small collector current consisting of thermally produced minority carriers and surface leakage. By exposing the collector junction to light, a manufacturer can produce a **phototransistor,** a device that has more sensitivity to light than a photodiode.

Basic Idea of Phototransistors

Figure 7-21*a* shows a transistor with an open base. As mentioned earlier, a small collector current exists in this circuit. Ignore the surface-leakage component, and

Figure 7-22 Phototransistor. (*a*) Open base gives maximum sensitivity; (*b*) variable base resistor changes sensitivity; (*c*) typical phototransistor.

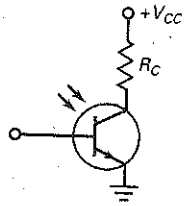

(*a*)

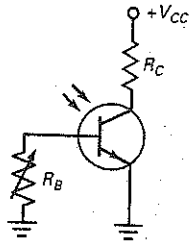

(*b*)

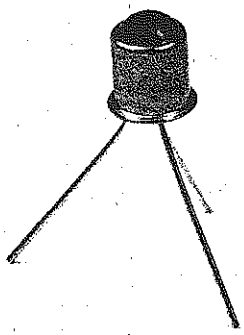

(*c*)

© Brian Moeskau/Brian Moeskau Photography

concentrate on the thermally produced carriers in the collector diode. Visualize the reverse current produced by these carriers as an ideal current source in parallel with the collector-base junction of an ideal transistor (Fig. 7-21*b*).

Because the base lead is open, all the reverse current is forced into the base of the transistor. The resulting collector current is:

$$I_{CEO} = \beta_{dc} I_R$$

where I_R is the reverse minority-carrier current. This says that the collector current is higher than the original reverse current by a factor of β_{dc}.

The collector diode is sensitive to light as well as heat. In a phototransistor, light passes through a window and strikes the collector-base junction. As the light increases, I_R increases, and so does I_{CEO}.

Phototransistor versus Photodiode

The main difference between a phototransistor and a photodiode is the current gain β_{dc}. The same amount of light striking both devices produces β_{dc} times more current in a phototransistor than in a photodiode. The increased sensitivity of a phototransistor is a big advantage over that of a photodiode.

Figure 7-22*a* shows the schematic symbol of a phototransistor. Notice the open base. This is the usual way to operate a phototransistor. You can control the sensitivity with a variable base return resistor (Fig. 7-22*b*), but the base is usually left open to get maximum sensitivity to light.

The price paid for increased sensitivity is reduced speed. A phototransistor is more sensitive than a photodiode, but it cannot turn on and off as fast. A photodiode has typical output currents in microamperes and can switch on and off in nanoseconds. The phototransistor has typical output currents in milliamperes but switches on and off in microseconds. A typical phototransistor is shown in Fig. 7-22*c*.

Optocoupler

Figure 7-23*a* shows an LED driving a phototransistor. This is a much more sensitive optocoupler than the LED-photodiode discussed earlier. The idea is straightforward. Any changes in V_S produce changes in the LED current, which changes the current through the phototransistor. In turn, this produces a changing voltage across the collector-emitter terminals. Therefore, a signal voltage is coupled from the input circuit to the output circuit.

Again, the big advantage of an optocoupler is the electrical isolation between the input and output circuits. Stated another way, the common for the input circuit is different from the common for the output circuit. Because of this,

Figure 7-23 (*a*) Optocoupler with LED and phototransistor; (*b*) optocoupler *IC*.

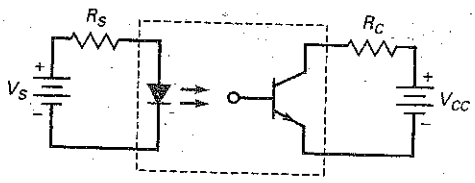

(*a*)

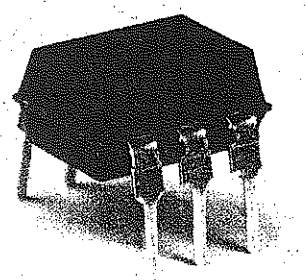

(*b*)

© Brian Moeskau/Brian Moeskau Photography

GOOD TO KNOW

The optocoupler was actually designed as a solid-state replacement for a mechanical relay. Functionally, the optocoupler is similar to its older mechanical counterpart because it offers a high degree of isolation between its input and its output terminals. Some of the advantages of using an optocoupler versus a mechanical relay are faster operating speeds, no bouncing of contacts, smaller size, no moving parts to stick, and compatibility with digital microprocessor circuits.

no conductive path exists between the two circuits. This means that you can ground one of the circuits and float the other. For instance, the input circuit can be grounded to the chassis of the equipment, while the common of the output side is ungrounded. Figure 7-23*b* shows a typical optocoupler *IC*.

An Example

The 4N24 optocoupler of Fig. 7-24*a* provides isolation from the power line and detects zero crossings of line voltage. The graph of Fig. 7-24*b* shows how the collector current is related to the LED current. Here is how you can calculate the peak output voltage from the optocoupler:

The bridge rectifier produces a full-wave current through the LED. Ignoring diode drops, the peak current through the LED is:

$$I_{LED} = \frac{1.414(115\text{ V})}{16\text{ k}\Omega} = 10.2\text{ mA}$$

The saturated value of the phototransistor current is:

$$I_{C(sat)} = \frac{20\text{ V}}{10\text{ k}\Omega} = 2\text{ mA}$$

Figure 7-24*b* shows the static curves of phototransistor current versus LED current for three different optocouplers. With a 4N24 (top curve), an LED current of 10.2 mA produces a collector current of approximately 15 mA when the load resistance is zero. In Fig. 7-24*a*, the phototransistor current never reaches 15 mA because the phototransistor saturates at 2 mA. In other words, there is more

Figure 7-24 (*a*) Zero-crossing detector; (*b*) optocoupler curves; (*c*) output of detector.

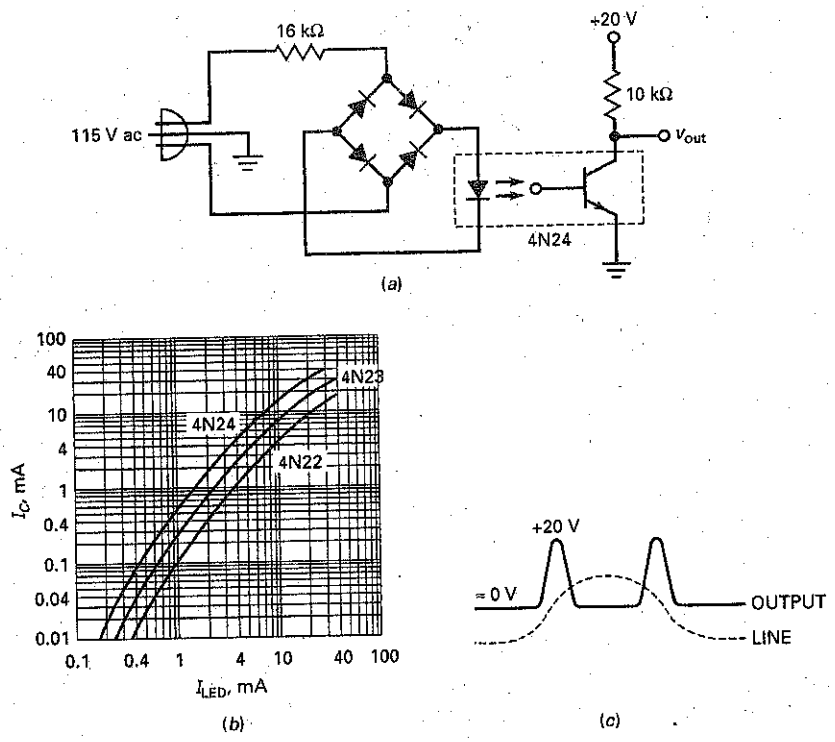

than enough LED current to produce saturation. Since the peak LED current is 10.2 mA, the transistor is saturated during most of the cycle. At this time, the output voltage is approximately zero, as shown in Fig. 7-24*c*.

The zero crossings occur when the line voltage is changing polarity, from positive to negative, or vice versa. At a zero crossing, the LED current drops to zero. At this instant, the phototransistor becomes an open circuit, and the output voltage increases to approximately 20 V, as indicated in Fig. 7-24*c*. As you can see, the output voltage is near zero most of the cycle. At the zero crossings, it increases rapidly to 20 V and then decreases to the baseline.

A circuit like Fig. 7-24*a* is useful because it does not require a transformer to provide isolation from the line. The photocoupler takes care of this. Furthermore, the circuit detects zero crossings, desirable in applications where you want to synchronize some other circuit to the frequency of the line voltage.

Summary

SEC. 7-1 VARIATIONS IN CURRENT GAIN

The current gain of a transistor is an unpredictable quantity. Because of manufacturing tolerances, the current gain of a transistor may vary over as much as a 3 : 1 range when you change from one transistor to another of the same type. Changes in the temperature and the collector current produce additional variations in the dc gain.

SEC. 7-2 THE LOAD LINE

The dc load line contains all the possible dc operating points of a transistor circuit. The upper end of the load line is called saturation, and the lower end is called cutoff. The key step in finding the saturation curent is to visualize a short between the collector and the emitter. The key step to finding the cutoff voltage is to visualize an open between the collector and emitter.

SEC. 7-3 THE OPERATING POINT

The operating point of the transistor is on the dc load line. The exact location of this point is determined by the collector current and the collector-emitter voltage. With base bias, the *Q* point moves whenever any of the circuit values change.

SEC. 7-4 RECOGNIZING SATURATION

The idea is to assume that the *npn* transistor is operating in the active region. If this leads to a contradiction (such as negative collector-emitter voltage or collector current greater than saturation current), then you know that the transistor is operating in the saturation region. Another way to recognize saturation is by comparing the base resistance to the collector resistance. If the ratio is in the vicinity of 10 : 1, the transistor is probably saturated.

SEC. 7-5 THE TRANSISTOR SWITCH

Base bias tends to use the transistor as a switch. The switching action is between cutoff and saturation. This type of operation is useful in digital circits. Another name for switching circuits is two-state circuits.

SEC. 7-6 EMITTER BIAS

Emitter bias is virtually immune to changes in current gain. The process for analyzing emitter bias is to find the emitter voltage, emitter current, collector voltage, and collector-emitter voltage. All you need for this process is Ohm's law.

SEC. 7-7 LED DRIVERS

A base-biased LED driver uses a saturated or cutoff transistor to control the current through an LED. An emitter-biased LED driver uses the active region and cutoff to control the current through the LED.

SEC. 7-8 THE EFFECT OF SMALL CHANGES

Useful to both troubleshooters and designers is the ability to predict the direction of change for a dependent voltage or current when one of the circuit values changes. When you can do this, you can better understand what happens for different troubles and can more easily analyze circuits.

SEC. 7-9 TROUBLESHOOTING

You can use a DMM or ohmmeter to test a transistor. This is best done with the transistor disconnected from the circuit. When the transistor is in the circuit with the power on, you can measure its voltages, which are clues to possible troubles.

SEC. 7-10 MORE OPTOELECTRONIC DEVICES

Because of its β_{dc}, the phototransistor is more sensitive to light than a photodiode. Combined with an LED, the phototransistor gives us a more sensitive optocoupler. The disadvantage with the phototransistor is that it responds more slowly to changes in light intensity than a photodiode.

Derivations

(7-1) Load-line analysis:

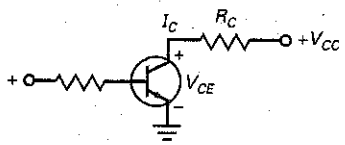

$$I_C = \frac{V_{CC} - V_{CE}}{R_C}$$

(7-2) Saturation current (base bias):

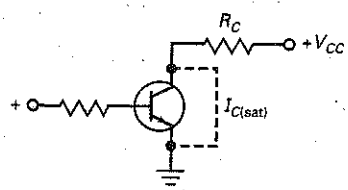

$$I_{C(sat)} = \frac{V_{CC}}{R_C}$$

(7-3) Cutoff voltage (base bias)

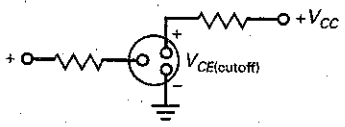

$$V_{CE(cutoff)} = V_{CC}$$

(7-4) Base current:

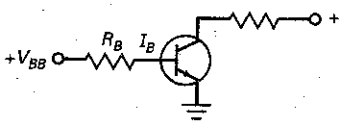

$$I_B = \frac{V_{BB} - V_{BE}}{R_B}$$

(7-5) Current gain:

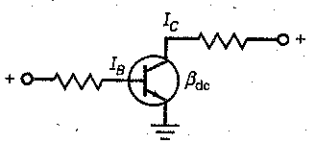

$$I_C = \beta_{dc} I_B$$

(7-6) Collector-emitter voltage:

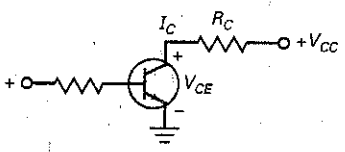

$$V_{CE} = V_{CC} - I_C R_C$$

(7-7) Emitter voltage:

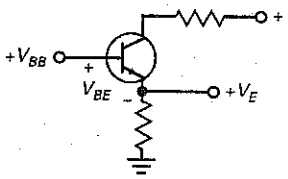

$$V_E = V_{BB} - V_{BE}$$

(7-8) Collector-emitter voltage:

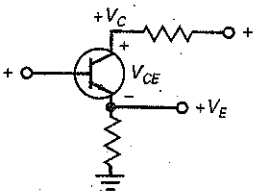

$$V_{CE} = V_C - V_E$$

(7-9) Insensitivity of I_C to β_{dc}

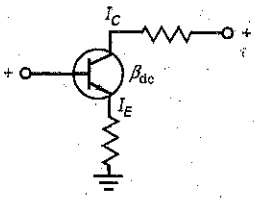

$$I_C = \frac{\beta_{dc}}{\beta_{dc} + 1} I_E$$

Student Assignments

1. **The current gain of a transistor is defined as the ratio of the collector current to the**
   a. Base current
   b. Emitter current
   c. Supply current
   d. Collector current

2. **The graph of current gain versus collector current indicates that the current gain**
   a. Is constant
   b. Varies slightly
   c. Varies significantly
   d. Equals the collector current divided by the base current

3. **When the collector current increases, what does the current gain do?**
   a. Decreases
   b. Stays the same
   c. Increases
   d. Any of the above

4. **As the temperature increases, the current gain**
   a. Decreases
   b. Remains the same
   c. Increases
   d. Can be any of the above

5. **When the base resistor increases, the collector voltage will probably**
   a. Decrease
   b. Stay the same
   c. Increase
   d. Do all of the above

6. **If the base resistor is very small, the transistor will operate in the**
   a. Cutoff region
   b. Active region
   c. Saturation region
   d. Breakdown region

7. **Ignoring the bulk resistance of the collector diode, the collector-emitter saturation voltage is**
   a. 0
   b. A few tenths of a volt
   c. 1 V
   d. Supply voltage

8. **Three different *Q* points are shown on a load line. The upper *Q* point represents the**
   a. Minimum current gain
   b. Intermediate current gain
   c. Maximum current gain
   d. Cutoff point

9. **If a transistor operates at the middle of the load line, a decrease in the base resistance will move the *Q* point**
   a. Down
   b. Up
   c. Nowhere
   d. Off the load line

10. **If a transistor operates at the middle of the load line, a decrease in the current gain will move the *Q* point**
    a. Down
    b. Up
    c. Nowhere
    d. Off the load line

11. **If the base supply voltage increases, the *Q* point moves**
    a. Down
    b. Up
    c. Nowhere
    d. Off the load line

12. **Suppose the base resistor is open. The *Q* point will be**
    a. In the middle of the load line
    b. At the upper end of the load line
    c. At the lower end of the load line
    d. Off the load line

13. **If the base supply voltage is disconnected, the collector-emitter voltage will equal**
    a. 0 V
    b. 6 V
    c. 10.5 V
    d. Collector supply voltage

14. **If the base resistor has zero resistance, the transistor will probably be**
    a. Saturated
    b. In cutoff
    c. Destroyed
    d. None of the above

15. **If the collector resistor opens in a base-biased circuit, the load line will become**
    a. Horizontal
    b. Vertical
    c. Useless
    d. Flat

16. **The collector current is 1.5 mA. If the current gain is 50, the base current is**
    a. 3 μA
    b. 30 μA
    c. 150 μA
    d. 3 mA

17. **The base current is 50 μA. If the current gain is 100, the collector current is closest in value to**
    a. 50 μA
    b. 500 μA
    c. 2 mA
    d. 5 mA

18. **When the *Q* point moves along the load line, V_{CE} decreases when the collector current**
    a. Decreases
    b. Stays the same
    c. Increases
    d. Does none of the above

19. **When there is no base current in a transistor switch, the output voltage from the transistor is**
    a. Low
    b. High
    c. Unchanged
    d. Unknown

20. **A circuit with a fixed emitter current is called**
    a. Base bias
    b. Emitter bias
    c. Transistor bias
    d. Two-supply bias

21. **The first step in analyzing emitter-based circuits is to find the**
    a. Base current
    b. Emitter voltage
    c. Emitter current
    d. Collector current

22. **If the current gain is unknown in an emitter-biased circuit, you cannot calculate the**
    a. Emitter voltage
    b. Emitter current
    c. Collector current
    d. Base current

23. **If the emitter resistor is open, the collector voltage is**
    a. Low
    b. High
    c. Unchanged
    d. Unknown

24. **If the collector resistor is open, the collector voltage is**
    a. Low
    b. High
    c. Unchanged
    d. Unknown

25. **When the current gain increases from 50 to 300 in an emitter-biased circuit, the collector current**
    a. Remains almost the same
    b. Decreases by a factor of 6
    c. Increases by a factor of 6
    d. Is zero

26. **If the emitter resistance increases, the collector voltage**
    a. Decreases
    b. Stays the same
    c. Increases
    d. Breaks down the transistor

27. **If the emitter resistance decreases, the**
    a. *Q* point moves up
    b. Collector current decreases
    c. *Q* point stays where it is
    d. Current gain increases

28. **When using a DMM to test a transistor, an approximate reading of 0.7 V will be found with how many polarity connections?**
   a. One
   b. Two
   c. Three
   d. None

29. **What DMM polarity connection is needed on an *npn* transistor's base to get a 0.7 V reading?**
   a. Positive
   b. Negative
   c. Either positive or negative
   d. Unknown

30. **When testing an *npn* transistor using an ohmmeter, the collector-emitter resistance will be low when**
   a. The collector is positive in respect to the emitter
   b. The emitter is positive in respect to the collector
   c. The transistor is normal
   d. The transistor is defective

31. **The major advantage of a phototransistor as compared to a photodiode is its**
   a. Response to higher frequencies
   b. AC operation
   c. Increased sensitivity
   d. Durability

Problems

SEC. 7-1 VARIATIONS IN CURRENT GAIN

7-1 Refer to Fig. 7-1. What is the current gain of a 2N3904 when the collector current is 100 mA and the junction temperature is 125°C?

7-2 Refer to Fig. 7-1. The junction temperature is 25°C, and the collector current is 1.0 mA. What is the current gain?

SEC. 7-2 THE LOAD LINE

7-3 Draw the load line for Fig. 7-25*a*. What is the collector current at the saturation point? The collector-emitter voltage at the cutoff point?

Figure 7-25

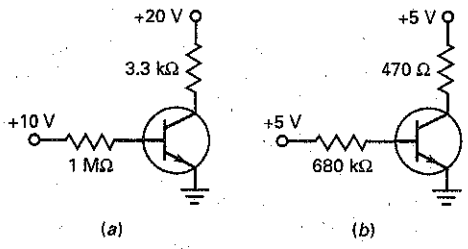

7-4 If the collector supply voltage is increased to 25 V in Fig. 7-25*a*, what happens to the load line?

7-5 If the collector resistance is increased to 4.7 kΩ in Fig. 7-25*a*, what happens to the load line?

7-6 If the base resistance of Fig. 7-25*a* is reduced to 500 kΩ, what happens to the load line?

7-7 Draw the load line for Fig. 7-25*b*. What is the collector current at the saturation point? The collector-emitter voltage at the cutoff point?

7-8 If the collector supply voltage is doubled in Fig. 7-25*b*, what happens to the load line?

7-9 If the collector resistance is increased to 1 kΩ in Fig. 7-25*b*, what happens to the load line?

SEC. 7-3 THE OPERATING POINT

7-10 In Fig. 7-25*a*, what is the voltage between the collector and ground if the current gain is 200?

7-11 The current gain varies from 25 to 300 in Fig. 7-25*a*. What is the minimum voltage from the collector to ground? The maximum?

7-12 The resistors of Fig. 7-25*a* have a tolerance of ±5 percent. The supply voltages have a tolerance of ±10 percent. If the current gain can vary from 50 to 150, what is the minimum possible voltage from the collector to ground? The maximum?

7-13 In Fig. 7-25*b*, what is the voltage between the collector and ground if the current gain is 150?

7-14 The current gain varies from 100 to 300 in Fig. 7-25*b*. What is the minimum voltage from the collector to ground? The maximum?

7-15 The resistors of Fig. 7-25*b* have a tolerance of ±5 percent. The supply voltages have a tolerance of ±10 percent. If the current gain can vary from 50 to 150, what is the minimum possible voltage from the collector to ground? The maximum?

SEC. 7-4 RECOGNIZING SATURATION

7-16 In Fig. 7-25*a*, use the circuit values shown unless otherwise indicated. Determine whether the transistor is saturated for each of these changes:

a. $R_B = 33\ \text{k}\Omega$ and $h_{FE} = 100$

b. $V_{BB} = 5\ \text{V}$ and $h_{FE} = 200$

c. $R_C = 10\ \text{k}\Omega$ and $h_{FE} = 50$

d. $V_{CC} = 10\ \text{V}$ and $h_{FE} = 100$

7-17 In Fig. 7-25*b*, use the circuit values shown unless otherwise indicated. Determine whether the transistor is saturated for each of these changes:

a. $R_B = 51\ k\Omega$ and $h_{FE} = 100$

b. $V_{BB} = 10\ V$ and $h_{FE} = 500$

c. $R_C = 10\ k\Omega$ and $h_{FE} = 100$

d. $V_{CC} = 10\ V$ and $h_{FE} = 100$

SEC. 7-5 THE TRANSISTOR SWITCH

7-18 The 680 kΩ in Fig. 7-25*b* is replaced by 4.7 kΩ and a series switch. Assuming an ideal transistor, what is the collector voltage if the switch is open? What is the collector voltage if the switch is closed?

7-19 Repeat Prob. 7-18, except use $V_{CE(sat)} = 0.2\ V$ and $I_{CEO} = 100\ nA$.

SEC. 7-6 EMITTER BIAS

7-20 MultiSim What is the collector voltage in Fig. 7-26*a*? The emitter voltage?

Figure 7-26

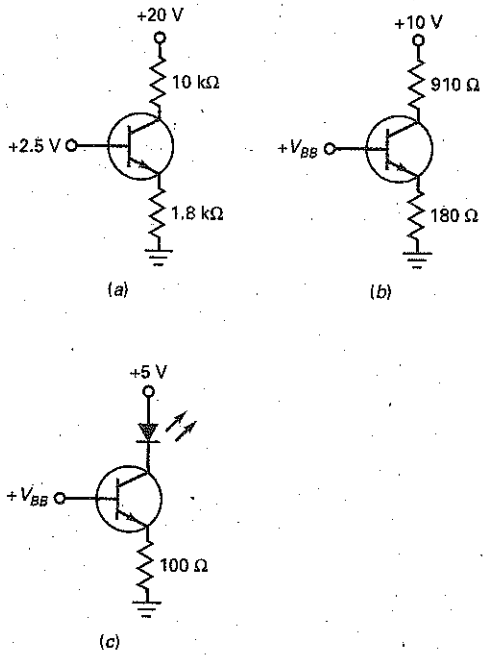

7-21 MultiSim If the emitter resistor is doubled in Fig. 7-26*a*, what is the collector-emitter voltage?

7-22 MultiSim If the collector supply voltage is decreased to 15 V in Fig. 7-26*a*, what is the collector voltage?

7-23 MultiSim What is the collector voltage in Fig. 7-26*b* if $V_{BB} = 2\ V$?

7-24 MultiSim If the emitter resistor is doubled in Fig. 7-26*b*, what is the collector-emitter voltage for a base supply voltage of 2.3 V?

7-25 MultiSim If the collector supply voltage is increased to 15 V in Fig. 7-26*b*, what is the collector-emitter voltage for $V_{BB} = 1.8\ V$?

SEC. 7-7 LED DRIVERS

7-26 MultiSim If the base supply voltage is 2 V in Fig. 7-26*c*, what is the current through the LED?

7-27 MultiSim If $V_{BB} = 1.8\ V$ in Fig. 7-26*c*, what is the LED current? The approximate V_C?

SEC. 7-8 THE EFFECT OF SMALL CHANGES

Use the letters U (up), D (down), and N (no change) for your answers in the following problems.

7-28 The base supply voltage of Fig. 7-27*a* decreases by 10 percent. What happens to the base current, collector current, and collector voltage?

Figure 7-27

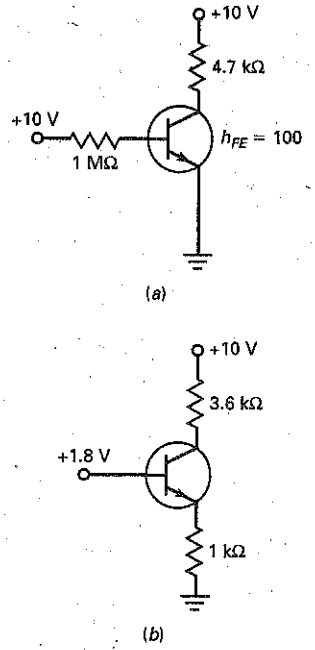

7-29 The base resistance of Fig. 7-27*a* decreases by 10 percent. What happens to the base current, collector current and collector voltage?

7-30 The collector resistance of Fig. 7-27*a* increases by 10 percent. What happens to the base current, collector current, and collector voltage?

7-31 The collector supply voltage of Fig. 7-27*a* increases by 10 percent. What happens to the base current, collector current, and collector voltage?

7-32 The base supply voltage of Fig. 7-27*b* decreases by 10 percent. What happens to the base current, collector current, and collector voltage?

7-33 The emitter resistance of Fig. 7-27*b* increases by 10 percent. What happens to the emitter current, collector current, and collector voltage?

7-34 The collector resistance of Fig. 7-27*b* increases by 10 percent. What happens to the emitter current, collector current, and collector voltage?

7-35 The collector supply voltage of Fig. 7-27*b* increases by 10 percent. What happens to the emitter current, collector current, and collector voltage?

SEC. 7-9 TROUBLESHOOTING

7-36 A voltmeter reads 10 V at the collector of Fig. 7-27*a*. What are some of the troubles that can cause this high reading?

7-37 What if the ground on the emitter is open in Fig. 7-27*a*? What will a voltmeter read for the base voltage? For the collector voltage?

7-38 A dc voltmeter measures a very low voltage at the collector of Fig. 7-27*a*. What are some of the possible troubles?

7-39 A voltmeter reads 10 V at the collector of Fig. 7-27*b*. What are some of the troubles that can cause this high reading?

7-40 What if the emitter resistor is open in Fig. 7-27*b*? What will a voltmeter read for the base voltage? For the collector voltage?

7-41 A dc voltmeter measures 1.1 V at the collector of Fig. 7-27*b*. What are some of the possible troubles?

Critical Thinking

7-42 You have built the circuit of Fig. 7-27*a*, and it is working normally. Now your job is to destroy the transistor. In other words, you are trying to find the ways in which to ruin the transistor. What will you try?

7-43 A first-year electronics student invents a new circuit. It works quite well when the current gain is between 90 and 110. Outside this range, it fails. The student plans to mass-produce the circuit by hand selecting 2N3904s that have the right current gain, and asks for your advice. What are some of the things you would say?

7-44 A student swears that a base-biased circuit with a load line that is not straight can be built and is willing to bet you $50 that it can be done. Should you take the bet? Explain your answer.

7-45 A student wants to measure the collector-emitter voltage in Fig. 7-27*b* and so connects a voltmeter between the collector and emitter. What does the voltmeter read? (*Note:* There are many right answers.)

7-46 What is the collector current of Q_2 in Fig. 7-28*a*?

7-47 In Fig. 7-28*a*, the first transistor has a current gain of 100, and the second transistor has a current gain of 50. What is the base current in the first transistor?

7-48 What is the current through the LED of Fig. 7-28*b* if $V_{BB} = 0$? If $V_{BB} = 10$ V?

7-49 The zener diode of Fig. 7-24*b* is replaced by a 1N4736. What is the LED current when $V_{BB} = 0$?

7-50 What is the maximum possible value of current through the 2 kΩ of Fig. 7-29*a*?

7-51 Figure 7-29*b* applies to the 4N33 of Fig. 7-29*a*. If the voltage across the 2 kΩ is 2 V, what is the value of V_{BB}?

7-52 The LED is open in Fig. 7-29*a*, and $V_{BB} = 3$ V. A voltmeter is connected between the collector of the 2N3904 and ground. What does the voltmeter read?

7-53 A DMM has an input resistance of 10 MΩ. The DMM is connected between the collector of Fig. 7-25*a* and ground. If the 3.3 kΩ collector resistor is open, what does the DMM read?

7-54 Redesign a transistor switch similar to Fig. 7-23*a* for hard saturation and to meet these specifications:

$$V_{CC} = 15\text{ V} \quad V_{BB} = 0\text{ V and } 15\text{ V} \quad I_{C(sat)} = 5\text{ mA}$$

7-55 Using Fig. 7-27*b*, change the value of the collector resistor (3.6 kΩ) so $V_{CE} = 6.6$ V.

Figure 7-28

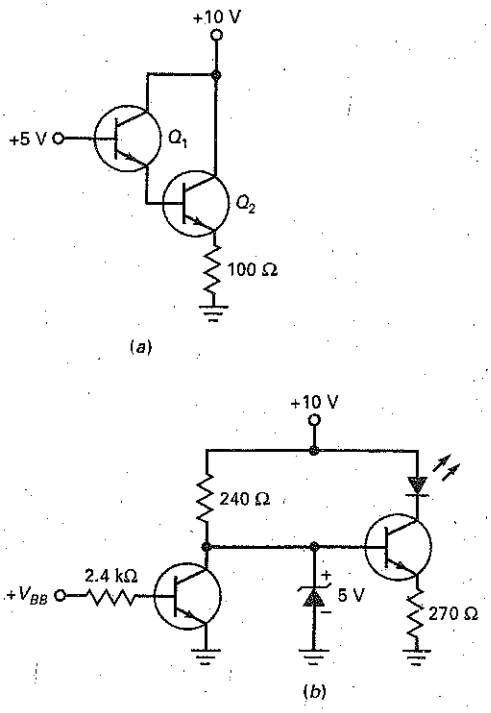

Figure 7-29

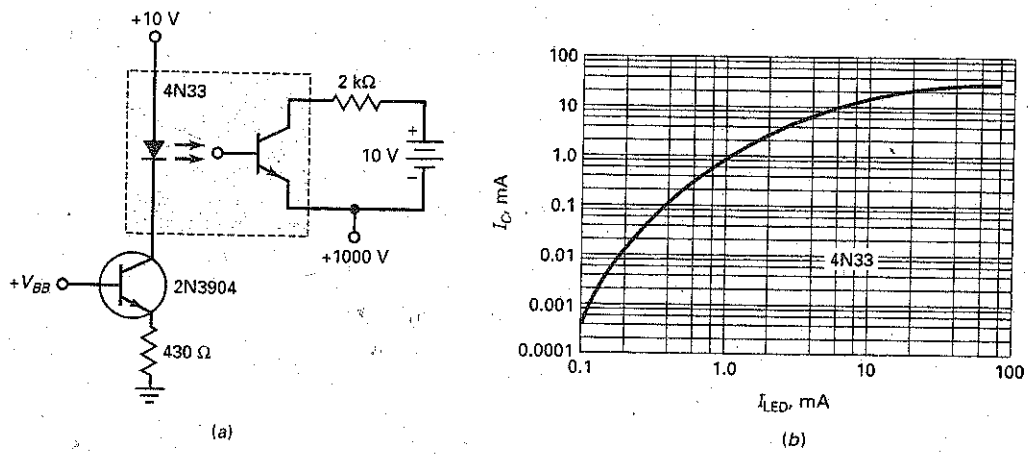

Up-Down Analysis

Use Fig. 7-30 for the remaining problems. Assume increases of approximately 10 percent in the independent variable, and use the second approximation of the transistor. A response should be an N (no change) if the change in a dependent variable is so small that you would have difficulty measuring it. For instance, you probably would find it difficult to measure a change of less than 1 percent. To a troubleshooter, a change like this is usually considered to be no change at all.

7-56 Try to predict the response of each dependent variable in the row labeled V_{BB}. Then answer the following question as simply and directly as possible. What effect does an increase in the base-supply voltage have on the dependent variables of the circuit?

7-57 Predict the response of each dependent variable in the row labeled V_{CC}. Then summarize your findings in one or two sentences.

7-58 Predict the response of each dependent variable in the row labeled R_E. List the dependent variables that decrease. Explain why these variables decrease, using Ohm's law or similar basic ideas.

7-59 Predict the response of each dependent variable in the row labeled R_C. List the dependent variables that show no change. Explain why these variables show no change.

Figure 7-30 Up-down analysis.

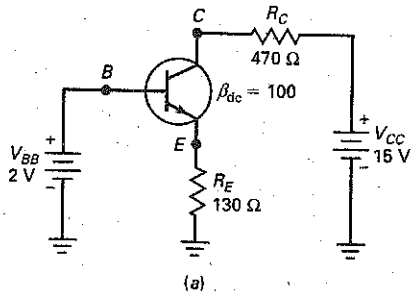

INDEPENDENT VARIABLES	DEPENDENT VARIABLES					
10% increase	V_B	V_E	V_C	I_E	I_C	I_B
V_{BB}						
V_{CC}						
R_E						
R_C						

(b)

Job Interview Questions

1. Draw a base-biased circuit. Then, tell me how to calculate the collector-emitter voltage. Why is this circuit likely to fail in mass production if a precise value of current gain is needed?
2. Draw another base-biased circuit. Draw a load line for the circuit and tell me how to calculate the saturation and cutoff points. Discuss the effects of a changing current gain on the location of the *Q* point.
3. What is the difference between base bias and emitter bias? In what kind of circuits is each useful?
4. Draw an emitter-biased circuit and tell me how it works. What happens to the collector current when the transistor is replaced or the temperature changes?
5. Tell me how you would test a transistor out of a circuit. What kind of tests can you do while the transistor is in a circuit with the power on?
6. What is an optocoupler and what are its advantages? I want to see a drawing of the device and an explanation of how it works.
7. What effect does temperature have on current gain?
8. What is the primary application of a base-biased circuit?
9. What piece of test equipment does a technician use for a preliminary test of a transistor?
10. What kind of faults can a transistor curve tracer detect?
11. Draw a base-biased circuit. Now, explain three ways to saturate this circuit and show the values.
12. When troubleshooting a switching circuit with a voltmeter, how can you tell whether the transistor is in saturation or cutoff?
13. Which transistor would tend to saturate more with less base current: a transistor with a large R_C or one with a small R_C?
14. When a base-biased transistor is used as a switch, what is the transistor doing?

Self-Test Answers

1.	a	12.	c	23.	b
2.	b	13.	d	24.	a
3.	d	14.	c	25.	a
4.	d	15.	a	26.	c
5.	c	16.	b	27.	a
6.	c	17.	d	28.	b
7.	a	18.	c	29.	a
8.	c	19.	b	30.	d
9.	b	20.	b	31.	c
10.	a	21.	b		
11.	b	22.	d		

Practice Problem Answers

7-2 $I_{C(sat)} = 6$ mA;
$V_{CE(cutoff)} = 12$ V

7-4 $I_{C(sat)} = 3$ mA;
The slope would decrease.

7-5 $V_{CE} = 8.25$ V

7-7 $R_B = 47$ kΩ

7-8 $V_{CE} = 11.999$ V and 0.15 V

7-9 $V_{CE} = 8.1$ V

7-10 $R_E = 680$ Ω

chapter 8

Transistor Biasing

A prototype is a basic circuit design that can be modified to get more advanced circuits. Base bias is a prototype used in the design of switching circuits. Emitter bias is a prototype used in the design of amplifying circuits. In this chapter, we emphasize emitter bias and the practical circuits that can be derived from it.

Objectives

After studying this chapter, you should be able to:

- Draw a diagram of a voltage-divider bias circuit.
- Calculate the divider current, base voltage, emitter voltage, emitter current, collector voltage, and collector-emitter voltage for an *npn* VDB circuit.
- Determine how to draw the load line and calculate the *Q* point for a given VDB circuit.
- Design a VDB circuit using design guidelines.
- Draw a two-supply emitter bias circuit and calculate V_{RE}, I_E, V_C, and V_{CE}.
- Compare several different types of bias and describe how well each works.
- Calculate the *Q* point of *pnp* VDB circuits.
- Troubleshoot transistor-biasing circuits.

Chapter Outline

8-1 Voltage-Divider Bias
8-2 Accurate VDB Analysis
8-3 VDB Load Line and *Q* Point
8-4 Two-Supply Emitter Bias
8-5 Other Types of Bias
8-6 Troubleshooting
8-7 *PNP* Transistors

Vocabulary

collector-feedback bias
emitter-feedback bias
firm voltage divider
prototype
self-bias
stage
stiff voltage divider
swamp out
two-supply emitter bias (TSEB)
voltage-divider bias (VDB)

8-1 Voltage-Divider Bias

Figure 8-1*a* shows the most widely used biasing circuit. Notice that the base circuit contains a voltage divider (R_1 and R_2). Because of this, the circuit is called **voltage-divider bias (VDB).**

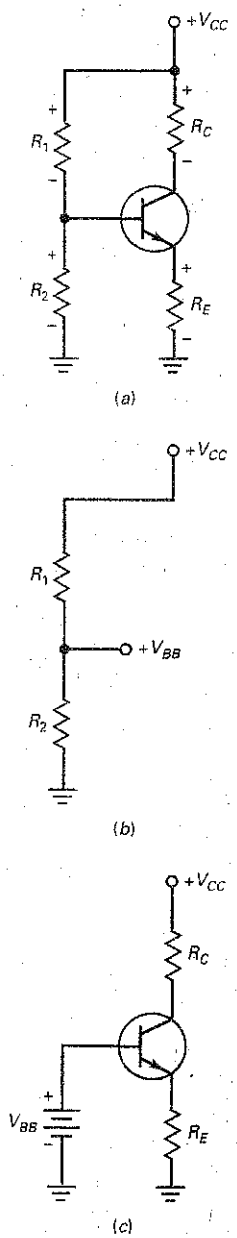

Figure 8-1 Voltage-divider bias. (*a*) Circuit; (*b*) voltage divider; (*c*) simplified circuit.

Simplified Analysis

For troubleshooting and preliminary analysis, use the following method. In any well-designed VDB circuit, the base current is much smaller than the current through the voltage divider. Since the base current has a negligible effect on the voltage divider, we can mentally open the connection between the voltage divider and the base to get the equivalent circuit of Fig. 8-1*b*. In this circuit, the output of the voltage divider is

$$V_{BB} = \frac{R_2}{R_1 + R_2} V_{CC}$$

Ideally, this is the base-supply voltage as shown in Fig. 8-1*c*.

As you can see, voltage-divider bias is really emitter bias in disguise. In other words, Fig. 8-1*c* is an equivalent circuit for Fig. 8-1*a*. This is why VDB sets up a fixed value of emitter current, resulting in a solid *Q* point that is independent of the current gain.

There is an error in this simplified approach, and we will discuss it in the next section. The crucial point is this: In any well-designed circuit, the error in using Fig. 8-1*c* is very small. In other words, a designer deliberately chooses circuit values so that Fig. 8-1*a* acts like Fig. 8-1*c*.

Conclusion

After you calculate V_{BB}, the rest of the analysis is the same as discussed earlier for emitter bias in Chap. 7. Here is a summary of the equations you can use to analyze VDB:

$$V_{BB} = \frac{R_2}{R_1 + R_2} V_{CC} \tag{8-1}$$

$$V_E = V_{BB} - V_{BE} \tag{8-2}$$

$$I_E = \frac{V_E}{R_E} \tag{8-3}$$

$$I_C \approx I_E \tag{8-4}$$

$$V_C = V_{CC} - I_C R_C \tag{8-5}$$

$$V_{CE} = V_C - V_E \tag{8-6}$$

These equations are based on Ohm's and Kirchhoff's laws. Here are the steps in the analysis:

1. Calculate the base voltage V_{BB} out of the voltage divider.
2. Subtract 0.7 V to get the emitter voltage (use 0.3 V for germanium).
3. Divide by the emitter resistance to get the emitter current.
4. Assume that the collector current is approximately equal to the emitter current.

GOOD TO KNOW

Since $V_E \cong I_C R_E$, Eq. (8-6) can also be shown as

$$V_{CE} = V_{CC} - I_C R_C - I_C R_E$$

or

$$V_{CE} = V_{CC} - I_C(R_C + R_E).$$

5. Calculate the collector-to-ground voltage by subtracting the voltage across the collector resistor from the collector supply voltage.
6. Calculate the collector-emitter voltage by subtracting the emitter voltage from the collector voltage.

Since these six steps are logical, they should be easy to remember. After you analyze a few VDB circuits, the process becomes automatic.

Example 8-1

MultiSim

Figure 8-2 Example.

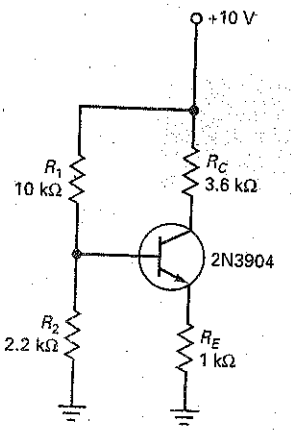

What is the collector-emitter voltage in Fig. 8-2?

SOLUTION The voltage divider produces an unloaded output voltage of:

$$V_{BB} = \frac{2.2\text{ k}\Omega}{10\text{ k}\Omega + 2.2\text{ k}\Omega}10\text{ V} = 1.8\text{ V}$$

Subtract 0.7 V from this to get:

$$V_E = 1.8\text{ V} - 0.7\text{ V} = 1.1\text{ V}$$

The emitter current is:

$$I_E = \frac{1.1\text{ V}}{1\text{ k}\Omega} = 1.1\text{ mA}$$

Since the collector current almost equals the emitter current, we can calculate the collector-to-ground voltage like this:

$$V_C = 10\text{ V} - (1.1\text{ mA})(3.6\text{ k}\Omega) = 6.04\text{ V}$$

The collector-emitter voltage is:

$$V_{CE} = 6.04 - 1.1\text{ V} = 4.94\text{ V}$$

Here is an important point: The calculations in this preliminary analysis do not depend on changes in the transistor, the collector current, or the temperature. This is why the Q point of this circuit is stable, almost rock-solid.

PRACTICE PROBLEM 8-1 Change the power supply voltage of Fig. 8-2 from 10 V to 15 V and solve for V_{CE}.

Example 8-2

MultiSim

Discuss the significance of Fig. 8-3, which shows a MultiSim analysis of the same circuit analyzed in the preceding example.

SOLUTION This really drives the point home. Here we have an almost identical answer using a computer to analyze the circuit. As you can see, the voltmeter reads 6.03 V (rounded to 2 places). Compare this to 6.04 V in the preceding example, and you can see the point. A simplified analysis has produced essentially the same result as a computer analysis.

You can expect this kind of close agreement whenever a VDB circuit has been well designed. After all, the whole point of VDB is to act like emitter bias to virtually eliminate the effects of changing the transistor, collector current, or temperature.

MultiSim **Figure 8-3** MultiSim example.

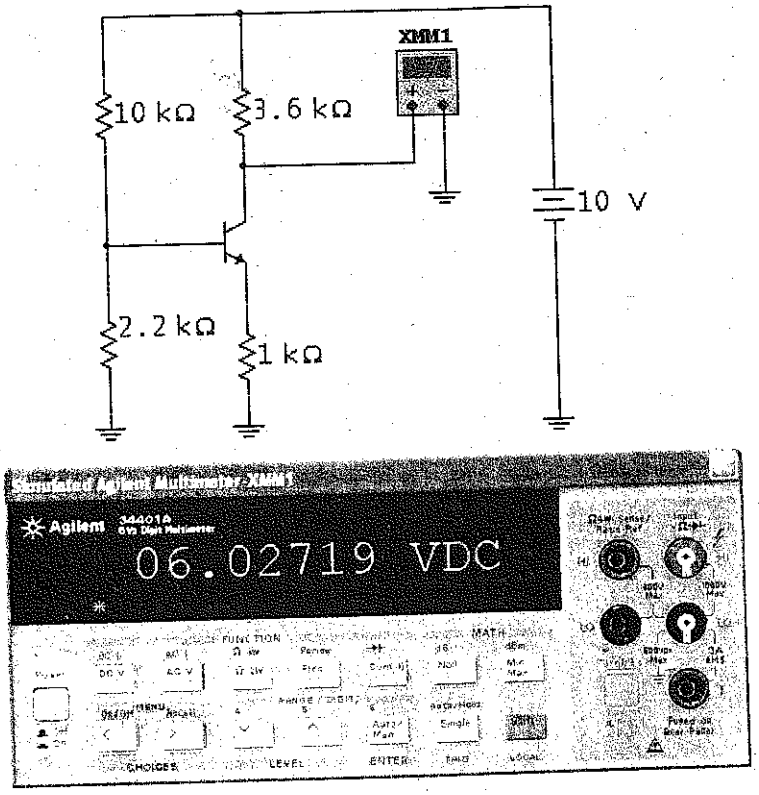

PRACTICE PROBLEM 8-2 Using MultiSim, change the supply voltage of Fig. 8-3 to 15 V and measure V_{CE}. Compare your measured value to the answer of Practice Problem 8-1.

8-2 Accurate VDB Analysis

What is a well-designed VDB circuit? It is one in which *the voltage divider appears stiff to the input resistance of the base.* The meaning of the last sentence needs to be discussed.

Source Resistance

Chapter 1 introduced the idea of a stiff voltage source:

Stiff voltage source: $R_S < 0.01R_L$

When this condition is satisfied, the load voltage is within 1 percent of the ideal voltage. Now, let us extend this idea to the voltage divider.

Figure 8-4 (*a*) Thevenin resistance; (*b*) equivalent circuit; (*c*) input resistance of base.

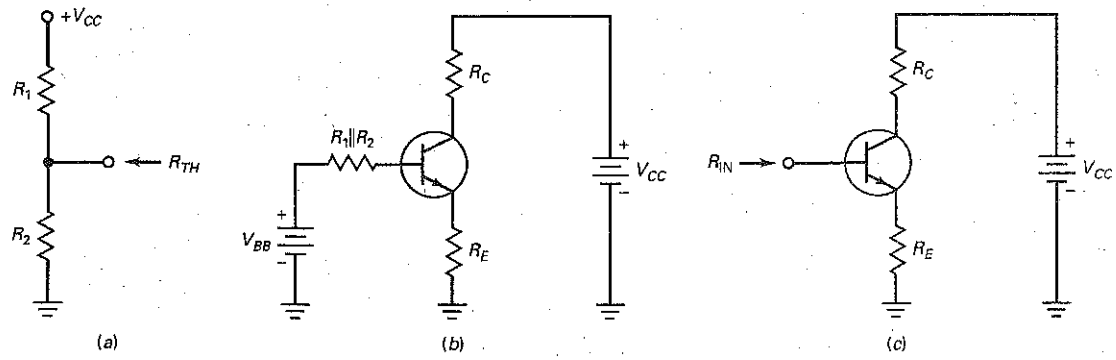

What is the Thevenin resistance of the voltage divider in Fig. 8-4*a*? Looking back into the voltage divider with V_{CC} grounded, we see R_1 in parallel with R_2. As an equation:

$$R_{TH} = R_1 \| R_2$$

Because of this resistance, the output voltage of the voltage divider is not ideal. A more accurate analysis includes the Thevenin resistance, as shown in Fig. 8-4*b*. The current through this Thevenin resistance reduces the base voltage from the ideal value of V_{BB}.

Load Resistance

How much less than ideal is the base voltage? The voltage divider has to supply the base current in Fig. 8-4*b*. Put another way, the voltage divider sees a load resistance of R_{IN}, as shown in Fig. 8-4*c*. For the voltage divider to appear stiff to the base, the 100 : 1 rule:

$$R_S < 0.01 R_L$$

translates to:

$$\mathbf{R_1 \| R_2 < 0.01 R_{IN}} \tag{8-7}$$

A well-designed VDB circuit will satisfy this condition.

Stiff Voltage Divider

If the transistor of Fig. 8-4*c* has a current gain of 100, its collector current is 100 times greater than the base current. This implies that the emitter current is also 100 times greater than the base current. When seen from the base side of the transistor, the emitter resistance R_E appears to be 100 times larger. As a derivation:

$$\mathbf{R_{IN} = \beta_{dc} R_E} \tag{8-8}$$

Therefore, Eq. (8-7) may be written as:

$$\textbf{Stiff voltage divider: } \mathbf{R_1 \| R_2 < 0.01 \beta_{dc} R_E} \tag{8-9}$$

Whenever possible, a designer selects circuit values to satisfy this 100 : 1 rule because it will produce an ultrastable Q point.

Firm Voltage Divider

Sometimes a stiff design results in such small values of R_1 and R_2 that other problems arise (discussed later). In this case, many designers compromise by using this rule:

$$\textbf{Firm voltage divider: } R_1 \| R_2 < 0.1\beta_{dc}R_E \tag{8-10}$$

We call any voltage divider that satisfies this 10 : 1 rule a **firm voltage divider.** In the worst case, using a firm voltage divider means that the collector current will be approximately 10 percent lower than the stiff value. This is acceptable in many applications because the VDB circuit still has a reasonably stable Q point.

A Closer Approximation

If you want a more accurate value for the emitter current, you can use the following derivation:

$$I_E = \frac{V_{BB} - V_{BE}}{R_E + (R_1 \| R_2)/\beta_{dc}} \tag{8-11}$$

This differs from the stiff value because $(R_1 \| R_2)/\beta_{dc}$ is in the denominator. As this term approaches zero, the equation simplifies to the stiff value.

Equation (8-11) will improve the analysis, but it is a fairly complicated formula. If you have a computer and need a more accurate analysis obtained with the stiff analysis, you should use MultiSim or an equivalent circuit simulator.

Example 8-3

Figure 8-5 Example.

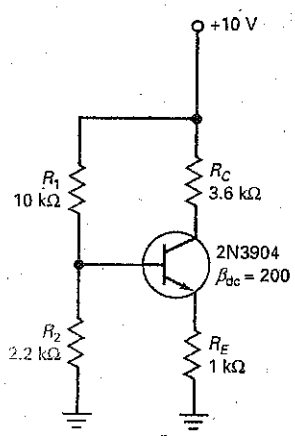

Is the voltage divider of Fig. 8-5 stiff? Calculate the more accurate value of emitter current using Eq. (8-11).

SOLUTION Check to see whether the 100 : 1 rule has been used:

$$\text{Stiff voltage divider: } R_1 \| R_2 < 0.01\beta_{dc}R_E$$

The Thevenin resistance of the voltage divider is:

$$R_1 \| R_2 = 10\text{ k}\Omega \,\|\, 2.2\text{ k}\Omega = \frac{(10\text{ k}\Omega)(2.2\text{ k}\Omega)}{10\text{ k}\Omega + 2.2\text{ k}\Omega} = 1.8\text{ k}\Omega$$

The input resistance of the base is:

$$\beta_{dc}R_E = (200)(1\text{ k}\Omega) = 200\text{ k}\Omega$$

and one-hundredth of this is:

$$0.01\beta_{dc}R_E = 2\text{ k}\Omega$$

Since 1.8 kΩ is less than 2 kΩ, the voltage divider is stiff.

With Eq. (8-11), the emitter current is

$$I_E = \frac{1.8\text{ V} - 0.7\text{ V}}{1\text{ k}\Omega + (1.8\text{ k}\Omega)/200} = \frac{1.1\text{ V}}{1\text{ k}\Omega + 9\,\Omega} = 1.09\text{ mA}$$

This is extremely close to 1.1 mA, the value we get with the simplified analysis.

The point is this: You don't have to use Eq. (8-11) to calculate emitter current when the voltage divider is stiff. Even when the voltage divider is firm, the use of Eq. (8-11) will improve the calculation for emitter current only by at most 10 percent. Unless otherwise indicated, from now on all analysis of VDB circuits will use the simplified method.

8-3 VDB Load Line and Q Point

Because of the stiff voltage divider in Fig. 8-6, the emitter voltage is held constant at 1.1 V in the following discussion.

The Q Point

The Q point was calculated in Sec. 8-1. It has a collector current of 1.1 mA and a collector-emitter voltage of 4.94 V. These values are plotted to get the Q point shown in Fig. 8-6. Since voltage-divider bias is derived from emitter bias, the Q point is virtually immune to changes in current gain. One way to move the Q point in Fig. 8-6 is by varying the emitter resistor.

For instance, if the emitter resistance is changed to 2.2 kΩ, the collector current decreases to:

$$I_E = \frac{1.1\text{ V}}{2.2\text{ k}\Omega} = 0.5\text{ mA}$$

The voltages change as follows:

$$V_C = 10\text{ V} - (0.5\text{ mA})(3.6\text{ k}\Omega) = 8.2\text{ V}$$

and

$$V_{CE} = 8.2\text{ V} - 1.1\text{ V} = 7.1\text{ V}$$

Therefore, the new Q point will be Q_L and will have coordinates of 0.5 mA and 7.1 V.

On the other hand, if we decrease the emitter resistance to 510 Ω, the emitter current increases to:

$$I_E = \frac{1.1\text{ V}}{510\,\Omega} = 2.15\text{ mA}$$

Figure 8-6 Calculating the Q point.

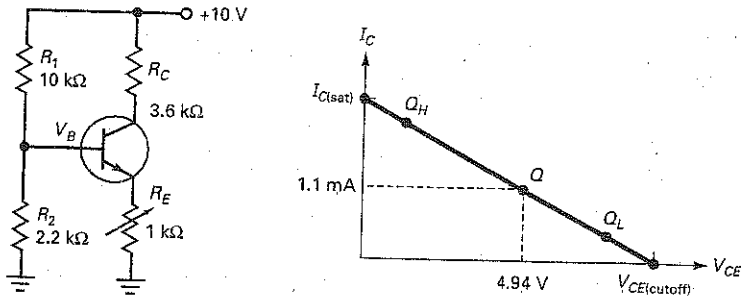

and the voltages change to:

$$V_C = 10\text{ V} - (2.15\text{ mA})(3.6\text{ k}\Omega) = 2.26\text{ V}$$

and

$$V_{CE} = 2.26\text{ V} - 1.1\text{ V} = 1.16\text{ V}$$

In this case, the Q point shifts to a new position at Q_H with coordinates of 2.15 mA and 1.16 V.

Q Point in Middle of Load Line

V_{CC}, R_1, R_2, and R_C control the saturation current and the cutoff voltage. A change in any of these quantities will change $I_{C(sat)}$ and/or $V_{CE(cutoff)}$. Once the designer has established the values of the foregoing variables, the *emitter resistance* is varied to set the Q point at any position along the load line. If R_E is too large, the Q point moves into the cutoff point. If R_E is too small, the Q point moves into saturation. Some designers set the Q point at the middle of the load line.

GOOD TO KNOW

Centering the Q point on a transistor load line is important because it allows for the maximum ac output voltage from the amplifier. Centering the Q point on the dc load line is sometimes referred to as *midpoint bias*.

VDB Design Guideline

Fig. 8-7 shows a VDB circuit. This circuit will be used to demonstrate a simplified design guideline to establish a stable Q point. This design technique is suitable for most circuits, but it is only a guideline. Other design techniques can be used.

Before starting the design, it is important to determine the circuit requirements or specifications. The circuit is normally biased for V_{CE} to be at a midpoint value with a specified collector current. You also need to know the value of V_{CC} and the range of β_{dc} for the transistor being used. Also, be sure the circuit will not cause the transistor to exceed its power dissipation limits.

Start by making the emitter voltage approximately one-tenth of the supply voltage:

$$V_E = 0.1\ V_{CC}$$

Next, calculate the value of R_E to set up the specified collector current:

$$R_E = \frac{V_E}{I_E}$$

Since the Q point needs to be at approximately the middle of the dc load line, about 0.5 V_{CC} appears across the collector-emitter terminals. The remaining 0.4 V_{CC} appears across the collector resistor; therefore:

$$R_C = 4\ R_E$$

Next, design for a stiff voltage divider using the 100:1 rule:

$$R_{TH} \leq 0.01\ \beta_{dc}\ R_E$$

Usually, R_2 is smaller than R_1. Therefore, the stiff voltage divider equation can be simplified to:

$$R_2 \leq 0.01\ \beta_{dc}\ R_E$$

You may also choose to design for a firm voltage divider by using the 10:1 rule:

$$R_2 \leq 0.1\ \beta_{dc}\ R_E$$

In either case, use the minimum-rated β_{dc} value at the specified collector current.

Finally, calculate R_1 by using proportion:

$$R_1 = \frac{V_1}{V_2}\ R_2$$

Figure 8-7 VDB design.

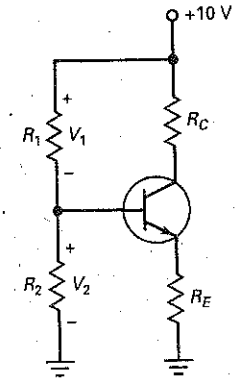

Example 8-4

For the circuit shown in Fig. 8-7, design the resistor values to meet these specifications:

$V_{CC} = 10$ V $\quad V_{CE}$ @ midpoint

$I_C = 10$ mA $\quad$ 2N3904's $\beta_{dc} = 100$–300

SOLUTION First, establish the emitter voltage by:

$$V_E = 0.1\ V_{CC}$$

$$V_E = (0.1)\ (10\ \text{V}) = 1\ \text{V}$$

The emitter resistor is found by:

$$R_E = \frac{V_E}{I_E}$$

$$R_E = \frac{1\ \text{V}}{10\ \text{mA}} = 100\ \Omega$$

The collector resistor is:

$$R_C = 4\ R_E$$

$$R_C = (4)\ (100\ \Omega) = 400\ \Omega\ (\text{use } 390\ \Omega)$$

Next, choose either a stiff or firm voltage divider. A stiff value of R_2 is found by:

$$R_2 \leq 0.01\ \beta_{dc}\ R_E$$

$$R_2 \leq (0.01)\ (100)\ (100\ \Omega) = 100\ \Omega$$

Now, the value of R_1 is:

$$R_1 = \frac{V_1}{V_2} R_2$$

$$V_2 = V_E + 0.7\ \text{V} = 1\ \text{V} + 0.7\ \text{V} = 1.7\ \text{V}$$

$$V_1 = V_{CC} - V_2 = 10\ \text{V} - 1.7\ \text{V} = 8.3\ \text{V}$$

$$R_1 = \left(\frac{8.3\ \text{V}}{1.7\ \text{V}}\right)(100\ \Omega) = 488\ \Omega\ (\text{use } 490\ \Omega)$$

PRACTICE PROBLEM 8-4 Using the given VDB design guidelines, design the VDB circuit of Fig. 8-7 to meet these specifications:

$V_{CC} = 10$ V $\quad V_{CE}$ @ midpoint $\quad$ stiff voltage divider

$I_C = 1$ mA $\quad \beta_{dc} = 70$-200

8-4 Two-Supply Emitter Bias

Some electronic equipment has a power supply that produces both positive and negative supply voltages. For instance, Fig. 8-8 shows a transistor circuit with two power supplies: +10 and −2 V. The negative supply forward biases the emitter

Figure 8-8 Two-supply emitter bias.

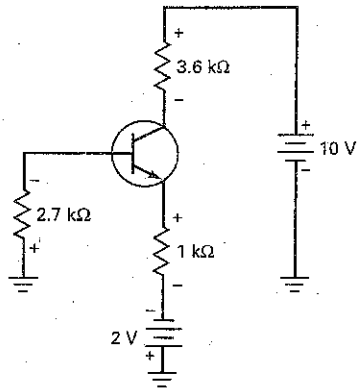

Figure 8-9 Redrawn TSEB circuit.

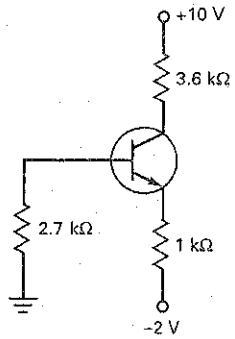

diode. The positive supply reverse biases the collector diode. This circuit is derived from emitter bias. For this reason, we refer to it as **two-supply emitter bias (TSEB).**

Analysis

The first thing to do is to redraw the circuit as it usually appears on schematic diagrams. This means deleting the battery symbols, as shown in Fig. 8-9. This is necessary on schematic diagrams because there usually is no room for battery symbols on complicated diagrams. All the information is still on the diagram, except that it is in condensed form. That is, a negative supply voltage of −2 V is applied to the bottom of the 1 kΩ, and a positive supply voltage of +10 V is applied to the top of the 3.6-kΩ resistor.

When this type of circuit is correctly designed, the base current will be small enough to ignore. This is equivalent to saying that the base voltage is approximately 0 V, as shown in Fig. 8-10.

The voltage across the emitter diode is 0.7 V, which is why −0.7 V is shown on the emitter node. If this is not clear, stop and think about it. There is a plus-to-minus drop of 0.7 V in going from the base to the emitter. If the base voltage is 0 V, the emitter voltage must be −0.7 V.

In Fig. 8-10, the emitter resistor again plays the key role in setting up the emitter current. To find this current, apply Ohm's law to the emitter resistor as follows: The top of the emitter resistor has a voltage of −0.7 V, and the bottom has a voltage of −2 V. Therefore, the voltage across the emitter resistor equals the difference between the two voltages. To get the right answer, subtract the more negative value from the more positive value. In this case, the more negative value is −2 V, so:

$$V_{RE} = -0.7\text{ V} - (-2\text{ V}) = 1.3\text{ V}$$

Once you have found the voltage across the emitter resistor, calculate the emitter current with Ohm's law:

$$I_E = \frac{1.3\text{ V}}{1\text{ k}\Omega} = 1.3\text{ mA}$$

This current flows through the 3.6 kΩ and produces a voltage drop that we subtract from +10 V as follows:

$$V_C = 10\text{ V} - (1.3\text{ mA})(3.6\text{ k}\Omega) = 5.32\text{ V}$$

The collector-emitter voltage is the difference between the collector voltage and the emitter voltage:

$$V_{CE} = 5.32\text{ V} - (-0.7\text{ V}) = 6.02\text{ V}$$

GOOD TO KNOW

When transistors are biased using well-designed voltage-divider or emitter-bias configurations, they are classified as beta-independent circuits because the values of I_C and V_{CE} are unaffected by changes in the transistor's beta.

Figure 8-10 Base voltage is ideally zero.

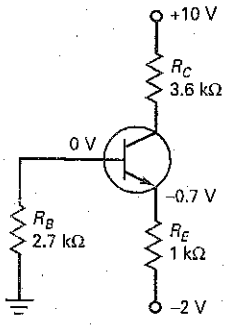

When two-supply emitter bias is well designed, it is similar to voltage-divider bias and satisfies this 100 : 1 rule:

$$R_B < 0.01\beta_{dc}R_E \tag{8-12}$$

In this case, the simplified equations for analysis are:

$$V_B \approx 0 \tag{8-13}$$

$$I_E = \frac{V_{EE} - 0.7\text{ V}}{R_E} \tag{8-14}$$

$$V_C = V_{CC} - I_C R_C \tag{8-15}$$

$$V_{CE} = V_C + 0.7\text{ V} \tag{8-16}$$

Base Voltage

One source of error in the simplified method is the small voltage across the base resistor of Fig. 8-10. Since a small base current flows through this resistance, a negative voltage exists between the base and ground. In a well-designed circuit, this base voltage is less than −0.1 V. If a designer has to compromise by using a larger base resistance, the voltage may be more negative than −0.1 V. If you are troubleshooting a circuit like this, the voltage between the base and ground should produce a low reading; otherwise, something is wrong with the circuit.

Example 8-5

MultiSim

What is the collector voltage in Fig. 8-10 if the emitter resistor is increased to 1.8 kΩ?

SOLUTION The voltage across the emitter resistor is still 1.3 V. The emitter current is:

$$I_E = \frac{1.3\text{ V}}{1.8\text{ k}\Omega} = 0.722\text{ mA}$$

The collector voltage is:

$$V_C = 10\text{ V} - (0.722\text{ mA})(3.6\text{ k}\Omega) = 7.4\text{ V}$$

PRACTICE PROBLEM 8-5 Change the emitter resistor of Fig. 8-10 to 2 kΩ and solve for V_{CE}.

Example 8-6

A **stage** is a transistor and the passive components connected to it. Figure 8-11 shows a three-stage circuit using two-supply emitter bias. What are the collector-to-ground voltages for each stage in Fig. 8-11?

SOLUTION To begin with, ignore the capacitors because they appear as open circuits to dc voltage and currents. Then, we are left with three isolated transistors, each using two-supply emitter bias.

The first stage has an emitter current of:

$$I_E = \frac{15\text{ V} - 0.7\text{ V}}{20\text{ k}\Omega} = \frac{14.3\text{ V}}{20\text{ k}\Omega} = 0.715\text{ mA}$$

and a collector voltage of:

$$V_C = 15\text{ V} - (0.715\text{ mA})(10\text{ k}\Omega) = 7.85\text{ V}$$

Since the other stages have the same circuit values, each has a collector-to-ground voltage of approximately 7.85 V. Summary Table 8-1 illustrates the four main types of bias circuits.

PRACTICE PROBLEM 8-6 Change the supply voltages of Fig. 8-11 to +12 V and −12 V. Then, calculate V_{CE} for each transistor.

Figure 8–11 Three-stage circuit.

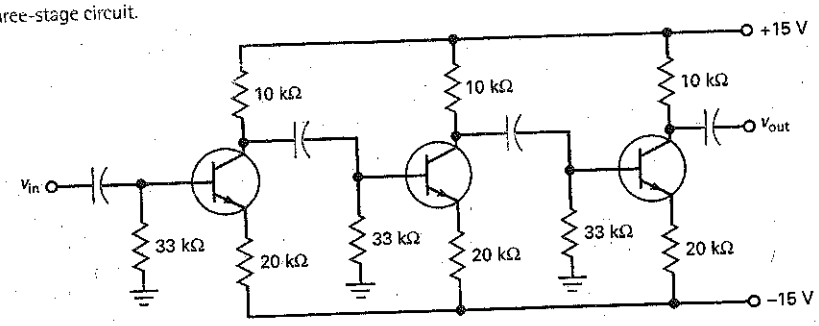

Summary Table 8–1 Main Bias Circuits

Type	Circuit	Calculations	Characteristics	Where used
Base bias	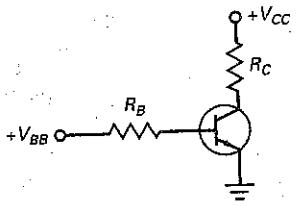	$I_B = \frac{V_{BB} - 0.7\text{ V}}{R_B}$ $I_C = \beta I_B$ $V_{CE} = V_{CC} - I_C R_C$	Few parts; β dependent; fixed base current	Switch; digital
Emitter bias	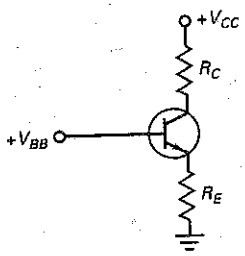	$V_E = V_{BB} - 0.7\text{ V}$ $I_E = \frac{V_E}{R_E}$ $V_C = V_C - I_C R_C$ $V_{CE} = V_C - V_E$	Fixed emitter current; β independent	I_C driver; amplifier
Voltage divider bias	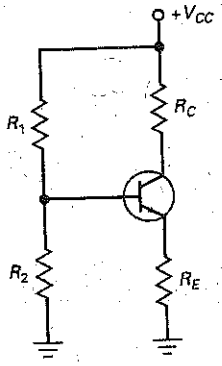	$V_B = \frac{R_2}{R_1 + R_2} V_{CC}$ $V_E = V_B - 0.7\text{ V}$ $I_E = \frac{V_E}{R_E}$ $V_C = V_{CC} - I_C R_C$ $V_{CE} = V_C - V_E$	Needs more resistors; β independent; needs only one power supply	Amplifier

Summary Table 8–1 (continued)

Type	Circuit	Calculations	Characteristics	Where used
Two-supply emitter bias	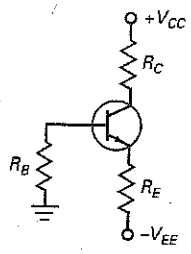	$V_B \approx 0$ V $V_E = V_B - 0.7$ V $V_{RE} = V_{EE} - 0.7$ V $I_E = \frac{V_{RE}}{R_E}$ $V_C = V_{CC} - I_C R_C$ $V_{CE} = V_C - V_E$	Needs positive and negative power supplies; β independent	Amplifier

Figure 8-12 (*a*) Base bias; (*b*) emitter-feedback bias.

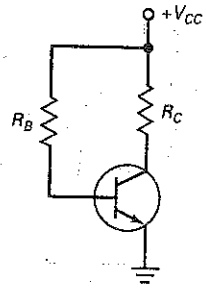

(*a*)

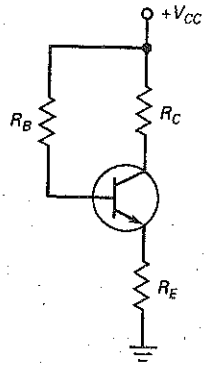

(*b*)

8-5 Other Types of Bias

In this section, we will discuss some other types of bias. A detailed analysis of these types of bias is not necessary because they are rarely used in new designs. But you should at least be aware of their existence in case you see them on a schematic diagram.

Emitter-Feedback Bias

Recall our discussion of base bias (Fig. 8-12*a*). This circuit is the worst when it comes to setting up a fixed Q point. Why? Since the base current is fixed, the collector current varies when the current gain varies. In a circuit like this, the Q point moves all over the load line with transistor replacement and temperature change.

Historically, the first attempt at stabilizing the Q point was **emitter-feedback bias,** shown in Fig. 8-12*b*. Notice that an emitter resistor has been added to the circuit. The basic idea is this: If I_C increases, V_E increases, causing V_B to increase. More V_B means less voltage across R_B. This results in less I_B, which opposes the original increase in I_C. It's called *feedback* because the change in emitter voltage is being fed back to the base circuit. Also, the feedback is called *negative* because it opposes the original change in collector current.

Emitter-feedback bias never became popular. The movement of the Q point is still too large for most applications that have to be mass-produced. Here are the equations for analyzing the emitter-feedback bias:

$$I_E = \frac{V_{CC} - V_{BE}}{R_E + R_B/\beta_{dc}} \tag{8-17}$$

$$V_E = I_E R_E \tag{8-18}$$

$$V_B = V_E + 0.7 \text{ V} \tag{8-19}$$

$$V_C = V_{CC} - I_C R_C \tag{8-20}$$

The intent of emitter-feedback bias is to **swamp out** the variations in β_{dc}; that is, R_E should be much greater than R_B/β_{dc}. If this condition is satisfied,

Figure 8-13 (*a*) Example of emitter-feedback bias; (*b*) *Q* point is sensitive to changes in current gain.

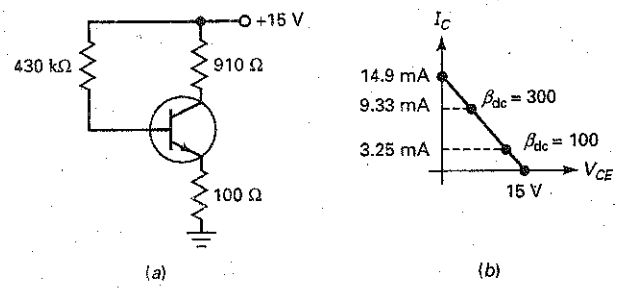

Eq. (8-17) will be insensitive to changes in β_{dc}. In practical circuits, however, a designer cannot select R_E large enough to swamp out the effects of β_{dc} without cutting off the transistor.

Figure 8-13*a* shows an example of an emitter-feedback bias circuit. Figure 8-13*b* shows the load line and the *Q* points for two different current gains. As you can see, a 3:1 variation in current gain produces a large variation in collector current. The circuit is not much better than base bias.

Collector-Feedback Bias

Figure 8-14*a* shows **collector-feedback bias** (also called **self-bias**). Historically, this was another attempt at stabilizing the *Q* point. Again, the basic idea is to feed back a voltage to the base in an attempt to neutralize any change in collector

Figure 8-14 (*a*) Collector-feedback bias; (*b*) example; (*c*) *Q* point is less sensitive to changes in current gain.

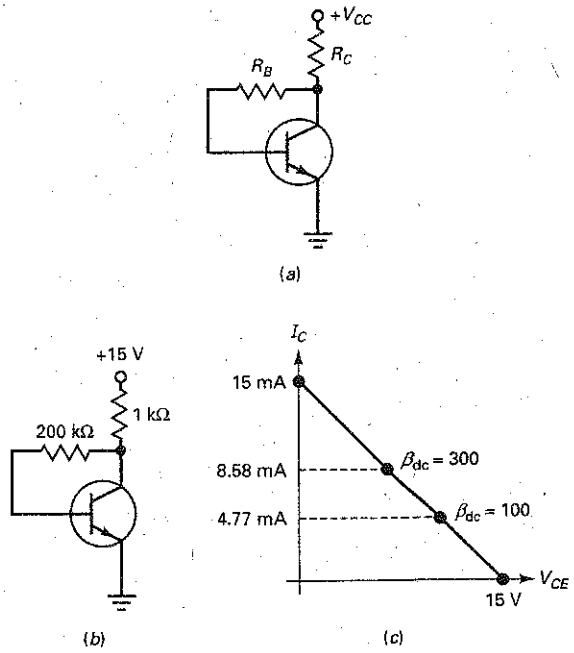

current. For instance, suppose the collector current increases. This decreases the collector voltage, which decreases the voltage across the base resistor. In turn, this decreases the base current, which opposes the original increase in collector current.

Like emitter-feedback bias, collector-feedback bias uses negative feedback in an attempt to reduce the original change in collector current. Here are the equations for analyzing collector-feedback bias:

$$I_E = \frac{V_{CC} - V_{BE}}{R_C + R_B/\beta_{dc}} \tag{8-21}$$

$$V_B = 0.7\text{ V} \tag{8-22}$$

$$V_C = V_{CC} - I_C R_C \tag{8-23}$$

The Q point is usually set near the middle of the load line by using a base resistance of:

$$R_B = \beta_{dc} R_C \tag{8-24}$$

Figure 8-14*b* shows an example of collector-feedback bias. Figure 8-14*c* shows the load line and the Q points for two different current gains. As you can see, a 3:1 variation in current gain produces less variation in collector current than emitter-feedback (see Fig. 8-13*b*).

Collector-feedback bias is more effective than emitter-feedback bias in stabilizing the Q point. Although the circuit is still sensitive to changes in current gain, it is used in practice because of its simplicity.

Collector- and Emitter-Feedback Bias

Emitter-feedback bias and collector-feedback bias were the first steps toward a more stable bias for transistor circuits. Even though the idea of negative feedback is sound, these circuits fall short because there is not enough negative feedback to do the job. This is why the next step in biasing was the circuit shown in Fig. 8-15. The basic idea is to use both emitter and collector feedback to try to improve the operation.

Figure 8-15 Collector-emitter feedback bias.

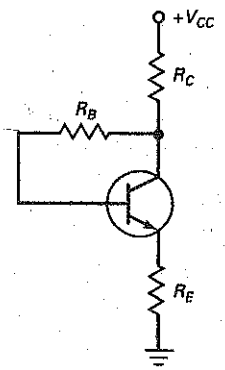

As it turns out, more is not always better. Combining both types of feedback in one circuit helps but still falls short of the performance needed for mass production. If you come across this circuit, here are the equations for analyzing it:

$$I_E = \frac{V_{CC} - V_{BE}}{R_C + R_E + R_B/\beta_{dc}} \tag{8-25}$$

$$V_E = I_E R_E \tag{8-26}$$

$$V_B = V_E + 0.7\text{ V} \tag{8-27}$$

$$V_C = V_{CC} - I_C R_C \tag{8-28}$$

8-6 Troubleshooting

Let us discuss troubleshooting voltage-divider bias because this biasing method is the most widely used. Figure 8-16 shows the VDB circuit analyzed earlier. Table 8-1 lists the voltages for the circuit when it is simulated with MultiSim. The voltmeter used to make the measurements has an input impedance of 10 MΩ.

Figure 8-16 Troubleshooting.

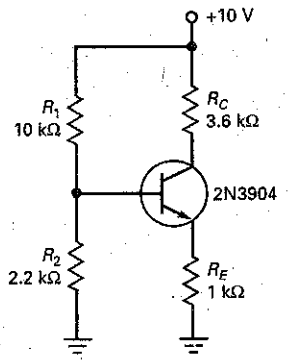

Table 8-1 Troubles and Symptoms

Trouble	V_B	V_E	V_C	Comment
None	1.79	1.12	6	No trouble
R_{1S}	10	9.17	9.2	Transistor saturated
R_{1O}	0	0	10	Transistor cutoff
R_{2S}	0	0	10	Transistor cutoff
R_{2O}	3.38	2.68	2.73	Reduces to emitter-feedback bias
R_{ES}	0.71	0	0.06	Transistor saturated
R_{EO}	1.8	1.37	10	10-MΩ voltmeter reduces V_E
R_{CS}	1.79	1.12	10	Collector resistor shorted
R_{CO}	1.07	0.4	0.43	Large base current
CES	2.06	2.06	2.06	All transistor terminals shorted
CEO	1.8	0	10	All transistor terminals open
No V_{CC}	0	0	0	Check supply and leads

Unique Troubles

Often, an open or shorted component produces unique voltages. For instance, the only way to get 10 V at the base of the transistor in Fig. 8-16 is with a shorted R_1. No other shorted or open component can produce the same result. Most of the entries in Table 8-1 produce a unique set of voltages, so you can identify them without breaking into the circuit to make further tests.

Ambiguous Troubles

Two troubles in Table 8-1 do not produce unique voltages: R_{1O} and R_{2S}. They both have measured voltages of 0, 0, and 10 V. With ambiguous troubles like this, the troubleshooter has to disconnect one of the suspected components and use an ohmmeter or other instrument to test it. For instance, we could disconnect R_1 and measure its resistance with an ohmmeter. If it's open, we have found the trouble. If it's OK, then R_2 is shorted.

Voltmeter Loading

Whenever you use a voltmeter, you are connecting a new resistance to a circuit. This resistance will draw current from the circuit. If the circuit has a large resistance, the voltage being measured will be lower than normal.

For instance, suppose the emitter resistor is open in Fig. 8-16. The base voltage is 1.8 V. Since there can be no emitter current with an open emitter resistor, the unmeasured voltage between the emitter and ground must also be 1.8 V. When you measure V_E with a 10-MΩ voltmeter, you are connecting 10 MΩ between the emitter and ground. This allows a small emitter current to flow, which produces a voltage across the emitter diode. This is why $V_E = 1.37$ V instead of 1.8 V for R_{EO} in Table 8-1.

Figure 8-17 *PNP* transistor.

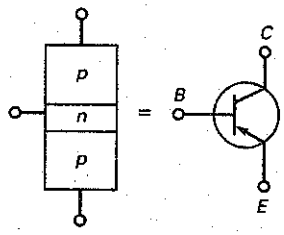

Figure 8-18 *PNP* currents.

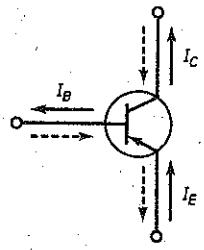

Figure 8-19 *PNP* circuit. (*a*) Negative supply; (*b*) positive supply.

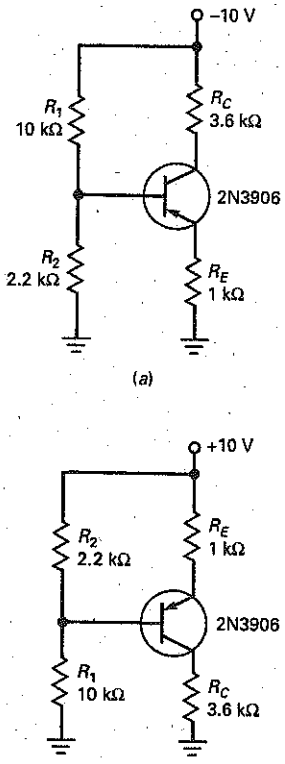

8-7 *PNP* Transistors

To this point, we have concentrated on bias circuits using *npn* transistors. Many circuits also use *pnp* transistors. This type of transistor is often used when the electronics equipment has a negative power supply. Also, *pnp* transistors are used as complements to *npn* transistors when dual (positive and negative) power supplies are available.

Figure 8-17 shows the structure of a *pnp* transistor along with its schematic symbol. Because the doped regions are of the opposite type, we have to turn our thinking around. Specifically, holes are the majority carriers in the emitter instead of free electrons.

Basic Ideas

Briefly, here is what happens at the atomic level: The emitter injects holes into the base. The majority of these holes flow on to the collector. For this reason, the collector current is almost equal to the emitter current.

Figure 8-18 shows the three transistor currents. Solid arrows represent conventional current, and dashed arrows represent electron flow.

Negative Supply

Figure 8-19*a* shows voltage-divider bias with a *pnp* transistor and a negative supply voltage of −10 V. The 2N3906 is the complement of the 2N3904; that is, its characteristics have the same absolute values as those of the 2N3904, but all currents and voltage polarities are reversed. Compare this *pnp* circuit with the *npn* circuit of Fig. 8-16. The only differences are the supply voltages and the transistors.

The point is this: Whenever you have a circuit with *npn* transistors, you can often use the same circuit with a negative power supply and *pnp* transistors.

Because of using a negative supply voltage, producing negative circuit values, care needs to be taken when doing circuit calculations. The steps in determining the Q point of Fig. 8-19*a* would be as follows:

$$V_B = \frac{R_2}{R_1 + R_2} V_{CC} = \frac{2.2\text{ k}\Omega}{10\text{ k}\Omega + 2.2\text{ k}\Omega}(-10\text{ V}) = -1.8\text{ V}$$

With a *pnp* transistor, the base-emitter junction will be forward biased when V_E is 0.7 V above V_B. Therefore,

$$V_E = V_B + 0.7\text{ V}$$

$$V_E = -1.8\text{ V} + 0.7\text{ V}$$

$$V_E = -1.1\text{ V}$$

Next, determine the emitter and collector currents:

$$I_E = \frac{V_E}{R_E} = \frac{-1.1\text{ V}}{1\text{ k}\Omega} = 1.1\text{ mA}$$

$$I_C \approx I_E = 1.1\text{ mA}$$

Now, solve for the collector and collector-emitter voltage values:

$$V_C = -V_{CC} + I_C R_C$$

$$V_C = -10\text{ V} + (1.1\text{ mA})(3.6\text{ k}\Omega)$$

$$V_C = -6.04\text{ V}$$

$$V_{CE} = V_C - V_E$$

$$V_{CE} = -6.04\text{ V} - (-1.1\text{ V}) = -4.94\text{ V}$$

Positive Power Supply

Positive power supplies are used more often in transistor circuits than negative power supplies. Because of this, you often see *pnp* transistors drawn upside down, as shown in Fig. 8-19*b*. Here is how the circuit works: The voltage across R_2 is applied to the emitter diode in series with the emitter resistor. This sets up the emitter current. The collector current flows through R_C, producing a collector-to-ground voltage. For troubleshooting, you can calculate V_C, V_B, and V_E as follows:

1. Get the voltage across R_2.
2. Subtract 0.7 V to get the voltage across the emitter resistor.
3. Get the emitter current.
4. Calculate the collector-to-ground voltage.
5. Calculate the base-to-ground voltage.
6. Calculate the emitter-to-ground voltage.

Example 8-7

MultiSim

Calculate the three transistor voltages for the *pnp* circuit of Fig. 8-19*b*.

SOLUTION Start with the voltage across R_2. We can calculate this voltage using the voltage-divider equation:

$$V_2 = \frac{R_2}{R_1 + R_2} V_{EE}$$

Alternatively, we can calculate the voltage in a different way: Get the current through the voltage divider and then multiply by R_2. The calculation looks like this:

$$I = \frac{10\text{ V}}{12.2\text{ k}\Omega} = 0.82\text{ mA}$$

and

$$V_2 = (0.82\text{ mA})(2.2\text{ k}\Omega) = 1.8\text{ V}$$

Next, subtract 0.7 V from the foregoing voltage to get the voltage across the emitter resistor:

$$1.8\text{ V} - 0.7\text{ V} = 1.1\text{ V}$$

Then, calculate the emitter current:

$$I_E = \frac{1.1\text{ V}}{1\text{ k}\Omega} = 1.1\text{ mA}$$

When the collector current flows through the collector resistor, it produces a collector-to-ground voltage of:

$$V_C = (1.1\text{ mA})(3.6\text{ k}\Omega) = 3.96\text{ V}$$

The voltage between the base and ground is:

$$V_B = 10\text{ V} - 1.8\text{ V} = 8.2\text{ V}$$

The voltage between the emitter and ground is:

$$V_E = 10\text{ V} - 1.1\text{ V} = 8.9\text{ V}$$

PRACTICE PROBLEM 8-7 For both circuits, Fig. 8-19*a* and 8-19*b*, change the power supply voltage from 10 V to 12 V and calculate V_B, V_E, V_C, and V_{CE}.

Summary

SEC. 8-1 VOLTAGE-DIVIDER BIAS

The most famous circuit based on the emitter-bias prototype is called voltage-divider bias. You can recognize it by the voltage divider in the base circuit.

SEC. 8-2 ACCURATE VDB ANALYSIS

The key idea is for the base current to be much smaller than the current through the voltage divider. When this condition is satisfied, the voltage divider holds the base voltage almost constant and equal to the unloaded voltage out of the voltage divider. This produces a solid Q point under all operating conditions.

SEC. 8-3 VDB LOAD LINE AND Q POINT

The load line is drawn through saturation and cutoff. The Q point lies on the load line with the exact location determined by the biasing. Large variations in current gain have almost no effect on the Q point because this type of bias sets up a constant value of emitter current.

SEC. 8-4 TWO-SUPPLY EMITTER BIAS

This design uses two power supplies: one positive and the other negative. The idea is to set up a constant value of emitter current. The circuit is a variation of the emitter-bias prototype discussed earlier.

SEC. 8-5 OTHER TYPES OF BIAS

This section introduced negative feedback, a phenomenon that exists when an increase in an output quantity produces a decrease in an input quantity. It is a brilliant idea that led to voltage-divider bias. The other types of bias cannot use enough negative feedback, so they fail to attain the performance level of voltage-divider bias.

SEC. 8-6 TROUBLESHOOTING

Troubleshooting is an art. Because of this, it cannot be reduced to a set of rules. You learn troubleshooting mostly from experience.

SEC. 8-7 *PNP* TRANSISTORS

These *pnp* devices have all currents and voltages reversed from their *npn* counterparts. They may be used with negative power supplies; more commonly, they are used with positive power supplies in an upside-down configuration.

VDB Derivations

(8-1) Base voltage:

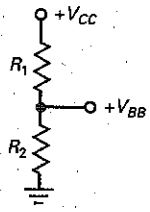

$$V_{BB} = \frac{R_2}{R_1 + R_2} V_{CC}$$

(8-2) Emitter voltage:

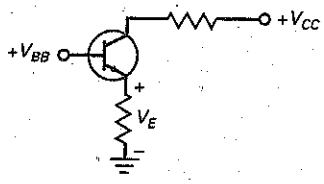

$$V_E = V_{BB} - V_{BE}$$

(8-3) Emitter current:

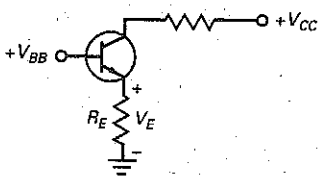

$$I_E = \frac{V_E}{R_E}$$

(8-4) Collector current:

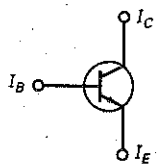

$$I_C \approx I_E$$

(8-5) Collector voltage:

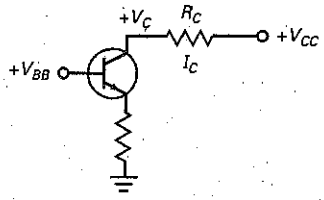

$$V_C = V_{CC} - I_C R_C$$

(8-6) Collector-emitter voltage:

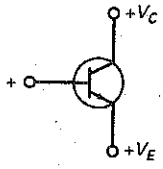

$$V_{CE} = V_C - V_E$$

TSEB Derivations

(8-13) Base voltage:

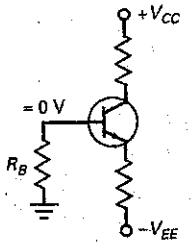

$$V_B \approx 0$$

(8-14) Emitter current:

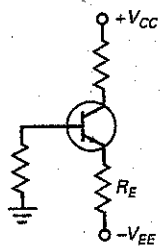

$$I_E = \frac{V_{EE} - 0.7\text{ V}}{R_E}$$

(8-15) Collector voltage (TSEB)

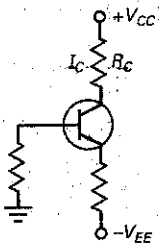

$$V_C = V_{CC} - I_C R_C$$

(8-16) Collector-emitter voltage (TSEB)

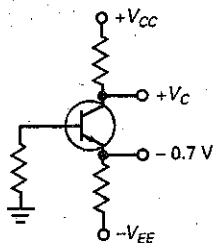

$$V_{CE} = V_C + 0.7\text{ V}$$

Student Assignments

1. **For the emitter bias, the voltage across the emitter resistor is the same as the voltage between the emitter and the**
   a. Base c. Emitter
   b. Collector d. Ground

2. **For emitter bias, the voltage at the emitter is 0.7 V less than the**
   a. Base voltage
   b. Emitter voltage
   c. Collector voltage
   d. Ground voltage

3. **With voltage-divider bias, the base voltage is**
   a. Less than the base supply voltage
   b. Equal to the base supply voltage
   c. Greater than the base supply voltage
   d. Greater than the collector supply voltage

4. **VDB is noted for its**
   a. Unstable collector voltage
   b. Varying emitter current
   c. Large base current
   d. Stable *Q* point

5. **With VDB, an increase in collector resistance will**
   a. Decrease the emitter voltage
   b. Decrease the collector voltage
   c. Increase the emitter voltage
   d. Decrease the emitter current

6. **VDB has a stable *Q* point like**
   a. Base bias
   b. Emitter bias
   c. Collector-feedback bias
   d. Emitter-feedback bias

7. **VDB needs**
   a. Only three resistors
   b. Only one supply
   c. Precision resistors
   d. More resistors to work better

8. **VDB normally operates in the**
   a. Active region
   b. Cutoff region
   c. Saturation region
   d. Breakdown region

9. **The collector voltage of a VDB circuit is not sensitive to changes in the**
   a. Supply voltage
   b. Emitter resistance
   c. Current gain
   d. Collector resistance

10. **If the emitter resistance decreases in a VDB circuit, the collector voltage**
    a. Decreases c. Increases
    b. Stays the same d. Doubles

11. **Base bias is associated with**
    a. Amplifiers
    b. Switching circuits
    c. Stable *Q* point
    d. Fixed emitter current

12. **If the emitter resistance is reduced by one-half in a VDB circuit, the collector current will**
    a. Double
    b. Drop in half
    c. Remain the same
    d. Increase

13. **If the collector resistance decreases in a VDB circuit, the collector voltage will**
   a. Decrease
   b. Stay the same
   c. Increase
   d. Double

14. **The *Q* point of a VDB circuit is**
   a. Hypersensitive to changes in current gain
   b. Somewhat sensitive to changes in current gain
   c. Almost totally insensitive to changes in current gain
   d. Greatly affected by temperature changes

15. **The base voltage of two-supply emitter bias (TSEB) is**
   a. 0.7 V
   b. Very large
   c. Near 0 V
   d. 1.3 V

16. **If the emitter resistance doubles with TSEB, the collector current will**
   a. Drop in half
   b. Stay the same
   c. Double
   d. Increase

17. **If a splash of solder shorts the collector resistor of TSEB, the collector voltage will**
   a. Drop to zero
   b. Equal the collector supply voltage
   c. Stay the same
   d. Double

18. **If the emitter resistance decreases with TSEB, the collector voltage will**
   a. Decrease
   b. Stay the same
   c. Increase
   d. Equal the collector supply voltage

19. **If the base resistor opens with TSEB, the collector voltage will**
   a. Decrease
   b. Stay the same
   c. Increase slightly
   d. Equal the collector supply voltage

20. **In TSEB, the base current must be very**
   a. Small
   b. Large
   c. Unstable
   d. Stable

21. **The *Q* point of TSEB does not depend on the**
   a. Emitter resistance
   b. Collector resistance
   c. Current gain
   d. Emitter voltage

22. **The majority carriers in the emitter of a *pnp* transistor are**
   a. Holes
   b. Free electrons
   c. Trivalent atoms
   d. Pentavalent atoms

23. **The current gain of a *pnp* transistor is**
   a. The negative of the *npn* current gain
   b. The collector current divided by the emitter current
   c. Near zero
   d. The ratio of collector current to base current

24. **Which is the largest current in a *pnp* transistor?**
   a. Base current
   b. Emitter current
   c. Collector current
   d. None of these

25. **The currents of a *pnp* transistor are**
   a. Usually smaller than *npn* currents
   b. Opposite *npn* currents
   c. Usually larger than *npn* currents
   d. Negative

26. **With *pnp* voltage-divider bias, you must use**
   a. Negative power supplies
   b. Positive power supplies
   c. Resistors
   d. Grounds

27. **With a TSEB *pnp* circuit using a negative V_{CC} supply, the emitter voltage is**
   a. Equal to the base voltage
   b. 0.7 V higher than the base voltage
   c. 0.7 V lower than the base voltage
   d. Equal to the collector voltage

28. **In a well-designed VDB circuit, the base current is**
   a. Much larger than the voltage divider current
   b. Equal to the emitter current
   c. Much smaller than the voltage divider current
   d. Equal to the collector current

29. **In a VDB circuit, the base input resistance R_{IN} is**
   a. Equal to $\beta_{dc} R_E$
   b. Normally smaller than R_{TH}
   c. Equal to $\beta_{dc} R_C$
   d. Independent of β_{dc}

30. **In a TSEB circuit, the base voltage is approximately zero when**
   a. The base resistor is very large
   b. The transistor is saturated
   c. β_{dc} is very small
   d. $R_B < 0.01\ \beta_{dc} R_E$

Problems

SEC. 8-1 VOLTAGE-DIVIDER BIAS

8-1 **MultiSim** What is the emitter voltage in Fig. 8-20? The collector voltage?

8-2 **MultiSim** What is the emitter voltage in Fig. 8-21? The collector voltage?

8-3 **MultiSim** What is the emitter voltage in Fig. 8-22? The collector voltage?

8-4 **MultiSim** What is the emitter voltage in Fig. 8-23? The collector voltage?

8-5 All resistors in Fig. 8-22 have a tolerance of ±5 percent. What is the lowest possible value of the collector voltage? The highest?

8-6 The power supply of Fig. 8-23 has a tolerance of ±10 percent. What is the lowest possible value of the collector voltage? The highest?

Figure 8-20

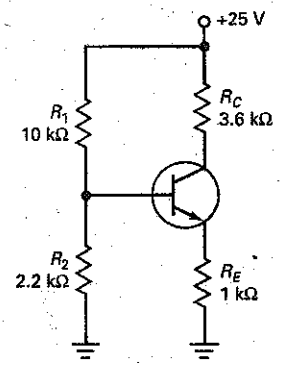

Figure 8-21

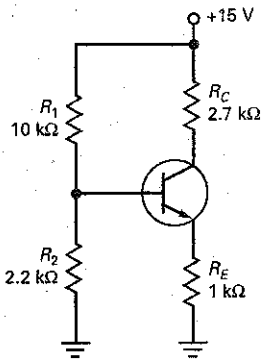

Figure 8-22

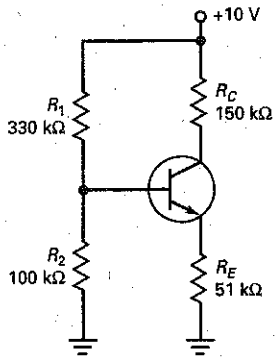

SEC. 8-3 VDB LOAD LINE AND Q POINT

8-7 What is the Q point for Fig. 8-20?

8-8 What is the Q point for Fig. 8-21?

8-9 What is the Q point for Fig. 8-22?

8-10 What is the Q point for Fig. 8-23?

8-11 All resistors in Fig. 8-22 have a tolerance of ±5 percent. What is the lowest value of the collector current? The highest?

8-12 The power supply of Fig. 8-23 has a tolerance of ±10 percent. What is the lowest possible value of the collector current? The highest?

SEC. 8-4 TWO-SUPPLY EMITTER BIAS

8-13 What is the emitter current in Fig. 8-24? The collector voltage?

8-14 If all resistances are doubled in Fig. 8-24, what is the emitter current? The collector voltage?

8-15 All resistors in Fig. 8-24 have a tolerance of ±5 percent. What is the lowest possible value of the collector voltage? The highest?

SEC. 8-5 OTHER TYPES OF BIAS

8-16 Does the collector voltage increase, decrease, or remain the same in Fig. 8-23 for small changes in each of the following?

a. R_1 increases
b. R_2 decreases
c. R_E increases
d. R_C decreases
e. V_{CC} increases
f. β_{dc} decreases

8-17 Does the collector voltage increase, decrease, or remain the same in Fig. 8-25 for small increases in each of the following circuit values?

a. R_1
b. R_2
c. R_E
d. R_C
e. V_{CC}
f. β_{dc}

Figure 8-23

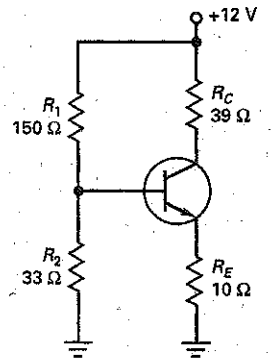

Figure 8-24

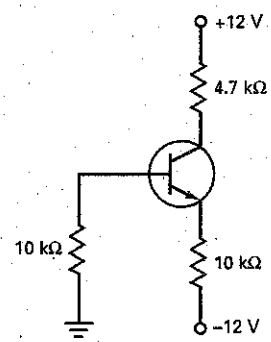

Figure 8-25

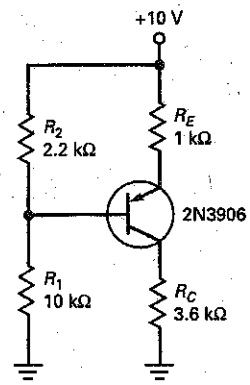

SEC. 8-6 TROUBLESHOOTING

8-18 What is the approximate value of the collector voltage in Fig. 8-23 for each of these troubles?

a. R_1 open
b. R_2 open
c. R_E open
d. R_C open
e. Collector-emitter open

8-19 What is the approximate value of the collector voltage in Fig. 8-25 for each of these troubles?

a. R_1 open
b. R_2 open
c. R_E open
d. R_C open
e. Collector-emitter open

SEC. 8-7 *PNP* TRANSISTORS

8-20 What is the collector voltage in Fig. 8-25?

8-21 What is the collector-emitter voltage in Fig. 8-25?

8-22 What is the collector saturation current in Fig. 8-25? The collector-emitter cutoff voltage?

8-23 What is the emitter voltage in Fig. 8-26? The collector voltage?

Figure 8-26

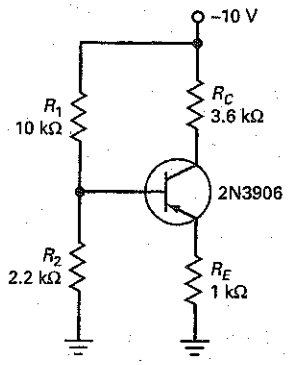

Critical Thinking

8-24 Somebody has built the circuit of Fig. 8-23, except for changing the voltage divider as follows: $R_1 = 150$ kΩ and $R_2 = 33$ kΩ. The builder cannot understand why the base voltage is only 0.8 V instead of 2.16 V (the ideal output of the voltage divider). Can you explain what is happening?

8-25 Somebody builds the circuit of Fig. 8-23 with a 2N3904. What do you have to say about that?

8-26 A student wants to measure the collector-emitter voltage in Fig. 8-23, and so connects a voltmeter between the collector and the emitter. What does it read?

8-27 You can vary any circuit value in Fig. 8-23. Name all the ways you can think of to destroy the transistor.

8-28 The power supply of Fig. 8-23 has to supply current to the transistor circuit. Name all the ways you can think of to find this current.

8-29 Calculate the collector voltage for each transistor of Fig. 8-27. (*Hint:* Capacitors are open to direct current.)

8-30 The circuit of Fig. 8-28*a* uses silicon diodes. What is the emitter current? The collector voltage?

8-31 What is the output voltage in Fig. 8-28*b*?

8-32 How much current is there through the LED of Fig. 8-29*a*?

8-33 What is the LED current in Fig. 8-29*b*?

8-34 We want the voltage divider of Fig. 8-22 to be stiff. Change R_1 and R_2 as needed without changing the *Q* point.

Figure 8-27

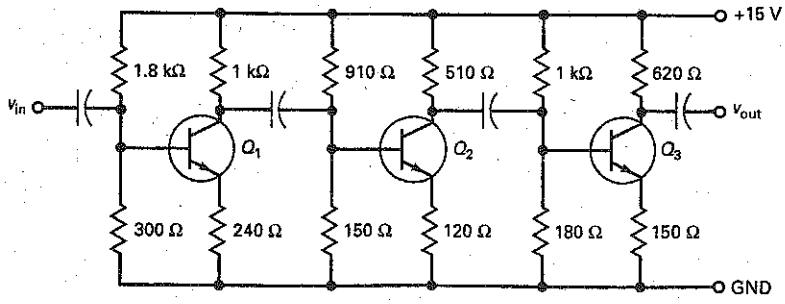

Figure 8-28

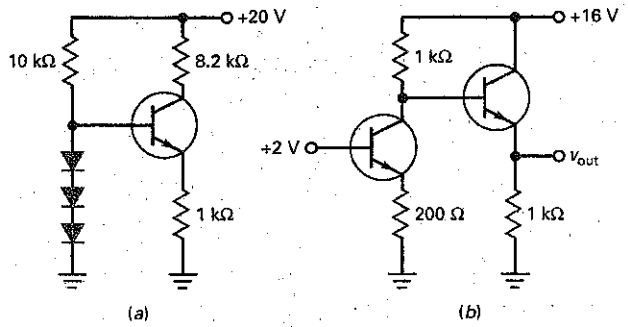

Figure 8-29

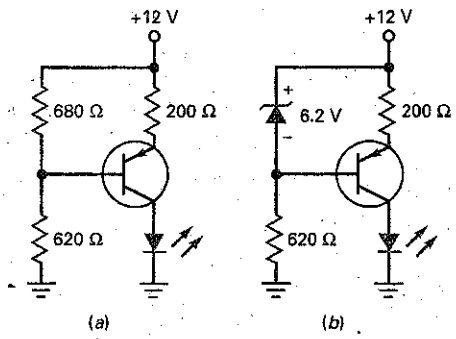

Troubleshooting

MultiSim Use Fig. 8-30 for the remaining problems.

8-35 Find Trouble 1.

8-36 Find Trouble 2.

8-37 Find Troubles 3 and 4.

8-38 Find Troubles 5 and 6.

8-39 Find Troubles 7 and 8.

8-40 Find Troubles 9 and 10.

8-41 Find Troubles 11 and 12.

Figure 8-30

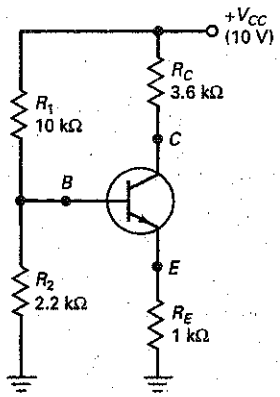

	MEASUREMENTS			
Trouble	V_B (V)	V_E (V)	V_C (V)	R_2 (Ω)
OK	1.8	1.1	6	OK
T1	10	9.3	9.4	OK
T2	0.7	0	0.1	OK
T3	1.8	1.1	10	OK
T4	2.1	2.1	2.1	OK
T5	0	0	10	OK
T6	3.4	2.7	2.8	∞
T7	1.83	1.212	10	OK
T8	0	0	10	0
T9	1.1	0.4	0.5	OK
T10	1.1	0.4	10	OK
T11	0	0	0	OK
T12	1.83	0	10	OK

Job Interview Questions

1. Draw a VDB circuit. Then, tell me all the steps in calculating the collector-emitter voltage. Why does this circuit have a very stable *Q* point?
2. Draw a TSEB circuit and tell me how it works. What happens to the collector current when the transistor is replaced or the temperature changes?
3. Describe a few other kinds of bias. What can you tell me about their *Q* points?
4. What are the two types of feedback biasing, and why were they developed?
5. What is the primary type of biasing used with discrete bipolar transistor circuits?
6. Should transistors being used as switching circuits be biased in the active region? If not, what two points associated with the load line are important with switching circuits?
7. In a VDB circuit, the base current is not small compared to the current through the voltage divider. What is the shortcoming of this circuit? What should be changed to correct it?
8. What is the most commonly used transistor biasing configuration? Why?
9. Draw a VDB circuit using an *npn* transistor. Label directions of divider, base, emitter, and collector currents.
10. What is wrong with a VDB circuit in which R_1 and R_2 are 100 times greater than R_E?

Self-Test Answers

1.	d	11.	b	21.	c
2.	a	12.	a	22.	a
3.	a	13.	c	23.	d
4.	d	14.	c	24.	b
5.	b	15.	c	25.	b
6.	b	16.	a	26.	c
7.	b	17.	b	27.	b
8.	a	18.	a	28.	c
9.	c	19.	d	29.	a
10.	a	20.	a	30.	d

Practice Problem Answers

8-1 $V_B = 2.7$ V;
$V_E = 2$ mA;
$V_C = 7.78$ V;
$V_{CE} = 5.78$ V

8-2 $V_{CE} = 5.85$ V;
Very close to the predicted value

8-4 $R_E = 1$ kΩ;
$R_C = 4$ kΩ;
$R_2 = 700$ Ω (680);
$R_1 = 3{:}4$ kΩ (3.3k)

8-5 $V_{CE} = 6.96$ V

8-6 $V_{CE} = 7.05$ V

8-7 For 8-19*a*:
$V_B = 2.16$ V;
$V_E = -1.46$ V;
$V_C = -6.73$ V;
$V_{CE} = -5.27$ V

For 8-19*b*:
$V_B = 9.84$ V;
$V_E = 10.54$ V;
$V_C = 5.27$ V;
$V_{CE} = -5.27$ V

chapter 9

AC Models

- After a transistor has been biased with the *Q* point near the middle of the load line, we can couple a small ac voltage into the base. This will produce an ac collector voltage. The ac collector voltage looks like the ac base voltage, except that it's a lot bigger. In other words, the ac collector voltage is an *amplified* version of the ac base voltage.

The invention of amplifying devices, first vacuum tubes and later transistors, was crucial to the evolution of electronics. Without amplification, there would be no radio, no television, and no computers.

Objectives

After studying this chapter, you should be able to:

- Draw a transistor amplifier and explain how it works.
- Describe what coupling and bypass capacitors are supposed to do.
- Give examples of ac shorts and ac grounds.
- Use the superposition theorem to draw the dc and ac equivalent circuits.
- Define small-signal operation and why it may be desirable.
- Draw an amplifier that uses VDB. Then, draw its ac equivalent circuit.

Chapter Outline

9-1 Base-Biased Amplifier

9-2 Emitter-Biased Amplifier

9-3 Small-Signal Operation

9-4 AC Beta

9-5 AC Resistance of the Emitter Diode

9-6 Two Transistor Models

9-7 Analyzing an Amplifier

9-8 AC Quantities on the Data Sheet

Vocabulary

ac current gain
ac emitter resistance
ac equivalent circuit
ac ground
ac short
bypass capacitor
CB amplifier
CC amplifier
CE amplifier
coupling capacitor
dc equivalent circuit
distortion
Ebers-Moll model
π model
small-signal amplifiers
superposition theorem
T model
voltage gain

9-1 Base-Biased Amplifier

In this section, we will discuss a base-biased amplifier. Although a base-biased amplifier is not useful in mass production, it has instructional value because its basic ideas can be used to build more complicated amplifiers.

Coupling Capacitor

Figure 9-1*a* shows an ac voltage source connected to a capacitor and a resistor. Since the impedance of the capacitor is inversely proportional to frequency, the capacitor effectively blocks dc voltage and transmits ac voltage. When the frequency is high enough, the capacitive reactance is much smaller than the resistance. In this case, almost all the ac source voltage appears across the resistor. When used in this way, the capacitor is called a **coupling capacitor** because it couples or transmits the ac signal to the resistor. Coupling capacitors are important because they allow us to couple an ac signal into an amplifier without disturbing its Q point.

For a coupling capacitor to work properly, its reactance must be much smaller than the resistance at the *lowest frequency of the ac source.* For instance, if the frequency of the ac source varies from 20 Hz to 20 kHz, the worst case occurs at 20 Hz. A circuit designer will select a capacitor whose reactance at 20 Hz is much smaller than the resistance.

How small is small? As a definition:

$$\textbf{Good coupling: } X_C < 0.1R \tag{9-1}$$

In words: The reactance should be at least 10 times smaller than the resistance at the lowest frequency of operation.

When the 10 : 1 rule is satisfied, Fig. 9-1*a* can be replaced by the equivalent circuit of Fig. 9-1*b*. Why? The magnitude of impedance in Fig. 9-1*a* is given by:

$$Z = \sqrt{R^2 + X_C^2}$$

When you substitute the worst-case into this, you get:

$$Z = \sqrt{R^2 + (0.1R)^2} = \sqrt{R^2 + 0.01R^2} = \sqrt{1.01R^2} = 1.005R$$

Since the impedance is within half of a percent of R at the lowest frequency, the current in Fig. 9-1*a* is only half a percent less than the current in Fig. 9-1*b*. Since any well-designed circuit satisfies the 10 : 1 rule, we can approximate all coupling capacitors as an **ac short** (Fig. 9-1*b*).

A final point about coupling capacitors: Since dc voltage has a frequency of zero, the reactance of a coupling capacitor is infinite at zero frequency. Therefore, we will use these two approximations for a capacitor:

1. For dc analysis, the capacitor is open.
2. For ac analysis, the capacitor is shorted.

Figure 9-1 (*a*) Coupling capacitor; (*b*) capacitor is an ac short; (*c*) dc open and ac short.

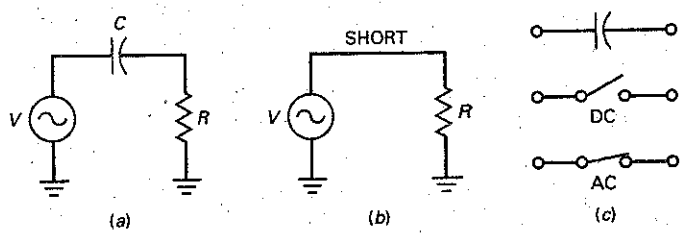

Figure 9-1*c* summarizes these two important ideas. Unless otherwise stated, all the circuits we analyze from now on will satisfy the 10:1 rule, so that we can visualize a coupling capacitor as shown in Fig. 9-1*c*.

Example 9-1

Using Fig. 9-1*a*, if $R = 2\ \text{k}\Omega$ and the frequency range is from 20 Hz to 20 kHz, find the value of C needed to act as a good coupling capacitor.

SOLUTION Following the 10:1 rule, X_C should be ten times smaller than R at the lowest frequency.

Therefore,

$$X_C < 0.1\,R \text{ at } 20\text{ Hz}$$

$$X_C < 200\ \Omega \text{ at } 20\text{ Hz}$$

Since $X_C = \dfrac{1}{2\pi fC}$

by rearrangement, $C = \dfrac{1}{2\pi f X_C} = \dfrac{1}{(2\pi)(20\text{ Hz})(200\ \Omega)}$

$$C = 39.8\ \mu\text{F}$$

PRACTICE PROBLEM 9-1 Using Example 9-1, find the value of C when the lowest frequency is 1 kHz and R is 1.6 kΩ.

DC Circuit

Figure 9-2*a* shows a base-biased circuit. The dc base voltage is 0.7 V. Because 30 V is much greater than 0.7 V, the base current is approximately 30 V divided by 1 MΩ, or:

$$I_B = 30\ \mu\text{A}$$

With a current gain of 100, the collector current is:

$$I_C = 3\text{ mA}$$

and the collector voltage is:

$$V_C = 30\text{ V} - (3\text{ mA})(5\text{ k}\Omega) = 15\text{ V}$$

So, the Q point is located at 3 mA and 15 V.

Amplifying Circuit

Figure 9-2*b* shows how to add components to build an amplifier. First, a coupling capacitor is used between an ac source and the base. Since the coupling capacitor is open to direct current, the same dc base current exists with or without the capacitor and ac source. Similarly, a coupling capacitor is used between the collector and the load resistor of 100 kΩ. Since this capacitor is open to direct current,

Figure 9-2 (*a*) Base bias; (*b*) base-biased amplifier.

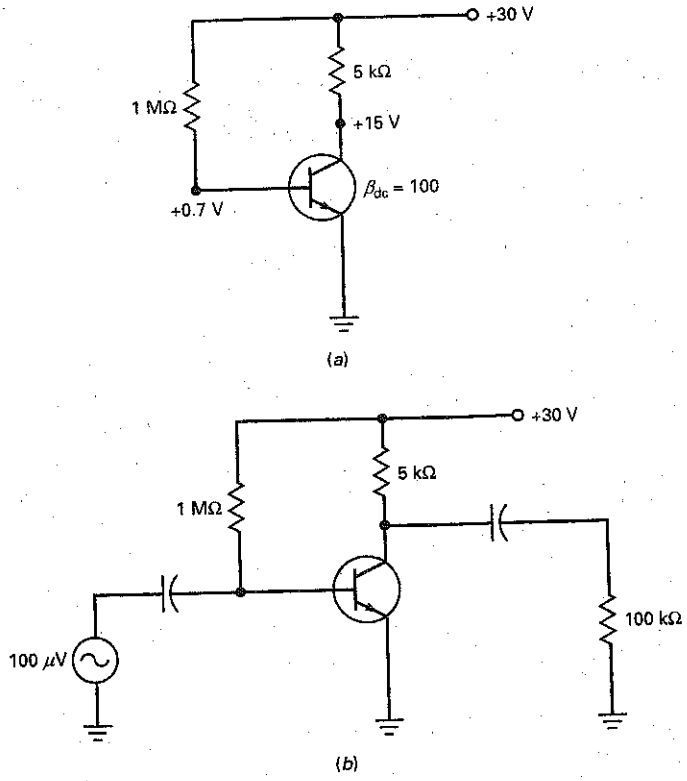

the dc collector voltage is the same with or without the capacitor and load resistor. The key idea is that the coupling capacitors prevent the ac source and load resistance from changing the Q point.

In Fig. 9-2*b*, the ac source voltage is 100 μV. Since the coupling capacitor is an ac short, all the ac source voltage appears between the base and the ground. This ac voltage produces an ac base current that is added to the existing dc base current. In other words, the total base current will have a dc component and an ac component.

Figure 9-3*a* illustrates the idea. An ac component is superimposed on the dc component. On the positive half cycle, the ac base current adds to the 30 μA of dc base current, and on the negative half cycle it subtracts from it.

The ac base current produces an amplified variation in collector current because of the current gain. In Fig. 9-3*b*, the collector current has a dc component of 3 mA. Superimposed on this is an ac collector current. Since this amplified collector current flows through the collector resistor, it produces a varying voltage across the collector resistor. When this voltage is subtracted from the supply voltage, we get the collector voltage shown in Fig. 9-3*c*.

Again, an ac component is superimposed on a dc component. The collector voltage is swinging sinusoidally above and below the dc level of +15 V. Also, the ac collector voltage is *inverted,* 180° out of phase with the input voltage. Why? On the positive half cycle of ac base current, the collector current increases, producing more voltage across the collector resistor. This means that there is less voltage between the collector and ground. Similarly, on the negative half cycle the

Figure 9-3 DC and ac components. (*a*) Base current; (*b*) collector current; (*c*) collector voltage.

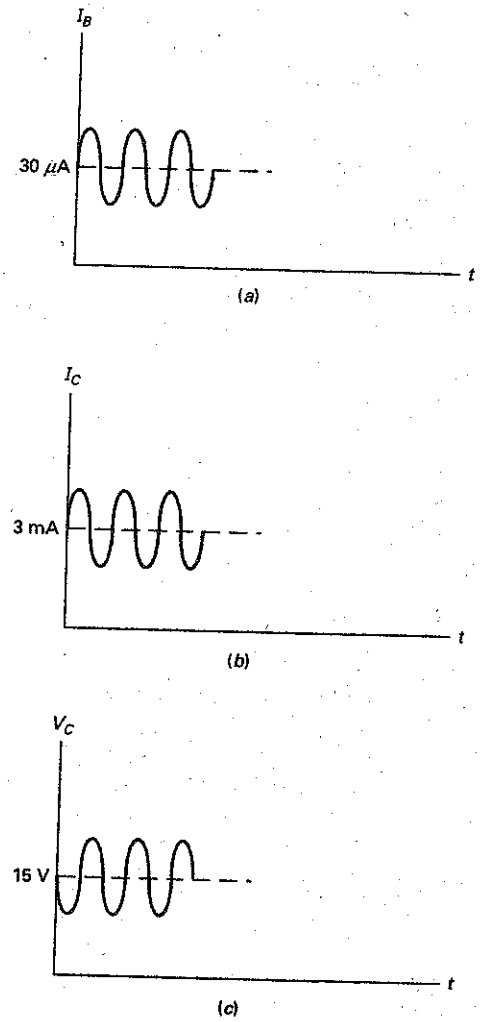

collector current decreases. Since there is less voltage across the collector resistor, the collector voltage increases.

Voltage Waveforms

Figure 9-4 shows the waveforms for a base-biased amplifier. The ac source voltage is a small sinusoidal voltage. This is coupled into the base, where it is superimposed on the dc component of +0.7 V. The variation in base voltage produces sinusoidal variations in base current, collector current, and collector voltage. The total collector voltage is an inverted sine wave superimposed on the dc collector voltage of +15 V.

Notice the action of the output coupling capacitor. Since it is open to direct current, it blocks the dc component of collector voltage. Since it is shorted to alternating current, it couples the ac collector voltage to the load resistor. This is why the load voltage is a pure ac signal with an average value of zero.

Figure 9-4 Base-biased amplifier with waveforms.

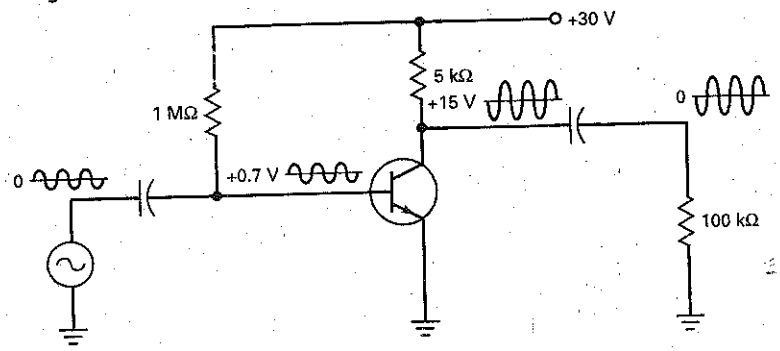

Voltage Gain

The **voltage gain** of an amplifier is defined as the ac output voltage divided by the ac input voltage. As a definition:

$$A_V = \frac{v_{out}}{v_{in}} \tag{9-2}$$

For instance, if we measure an ac load voltage of 50 mV with an ac input voltage of 100 μV, the voltage gain is:

$$A_V = \frac{50\text{ mV}}{100\ \mu\text{V}} = 500$$

This says that the ac output voltage is 500 times larger than the ac input voltage.

Calculating Output Voltage

We can multiply both sides of Eq. (9-2) by v_{in} to get this derivation:

$$v_{out} = A_V v_{in} \tag{9-3}$$

This is useful when you want to calculate the value of v_{out}, given the values of A_V and v_{in}.

For instance, the triangular symbol shown in Fig. 9-5*a* is used to indicate an amplifier of any design. Since we are given an input voltage of 2 mV and a voltage gain of 200, we can calculate an output voltage of:

$$v_{out} = (200)(2\text{ mV}) = 400\text{ mV}$$

Figure 9-5 (*a*) Calculating output voltage; (*b*) calculating input voltage.

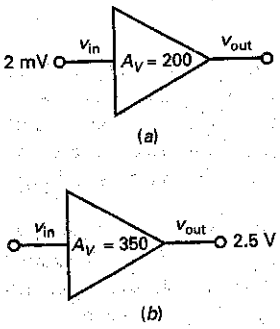

Calculating Input Voltage

We can divide both sides of Eq. (9-3) by A_V to get this derivation:

$$v_{in} = \frac{v_{out}}{A_V} \tag{9-4}$$

This is useful when you want to calculate the value of v_{in}, given the values v_{out} and A_V. For instance, the output voltage is 2.5 V in Fig. 9-5*b*. With a voltage gain of 350, the input voltage is:

$$v_{in} = \frac{2.5\text{ V}}{350} = 7.14\text{ mV}$$

Figure 9-6 (*a*) Bypass capacitor; (*b*) point *E* is an ac ground.

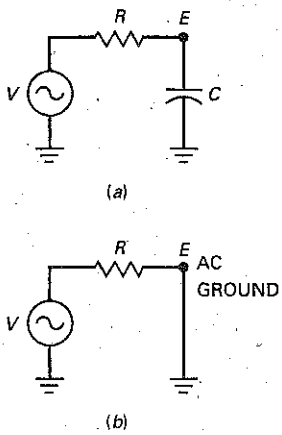

9-2 Emitter-Biased Amplifier

The base-biased amplifier has an unstable *Q* point. For this reason, it is not used much as an amplifier. Instead, an emitter-biased amplifier (either VDB or TSEB) with its stable *Q* point is preferred.

Bypass Capacitor

A **bypass capacitor** is similar to a coupling capacitor because it appears open to direct current and shorted to alternating current. But it is not used to couple a signal between two points. Instead, it is used to create an **ac ground.**

Figure 9-6*a* shows an ac voltage source connected to a resistor and a capacitor. The resistance *R* represents the Thevenin resistance as seen by the capacitor. When the frequency is high enough, the capacitive reactance is much smaller than the resistance. In this case, almost all the ac source voltage appears across the resistor. Stated another way, point *E* is effectively shorted to ground.

When used in this way, the capacitor is called a *bypass capacitor* because it bypasses or shorts point *E* to ground. A bypass capacitor is important because it allows us to create an ac ground in an amplifier without disturbing its *Q* point.

For a bypass capacitor to work properly, its reactance must be much smaller than the resistance at the *lowest frequency of the ac source.* The definition for good bypassing is identical to that for good coupling:

$$\textbf{Good bypassing: } X_C < 0.1R \tag{9-5}$$

When this rule is satisfied, Fig. 9-6*a* can be replaced by the equivalent circuit of Fig. 9-6*b*.

Example 9-2

Figure 9-7

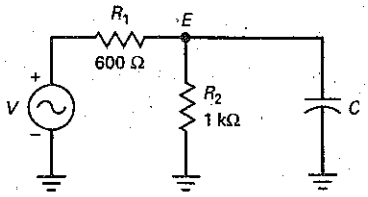

In Fig. 9-7, the input frequency of *V* is 1 kHz. What value of *C* is needed to effectively short point *E* to ground?

SOLUTION First, find the Thevenin resistance as seen by the capacitor *C*.

$$R_{TH} = R_1 \parallel R_2$$

$$R_{TH} = 600\ \Omega \parallel 1\ \text{k}\Omega = 375\ \Omega$$

Next, X_C should be ten times smaller than R_{TH}. Therefore, $X_C < 37.5\ \Omega$ at 1 kHz. Now solve for *C* by

$$C = \frac{1}{2\pi f X_C} = \frac{1}{(2\pi)(1\ \text{kHz})(37.5\ \Omega)}$$

$$C = 4.2\ \mu\text{F}$$

PRACTICE PROBLEM 9-2 In Fig. 9-7, find the value of *C* needed if *R* is 50 Ω.

Figure 9-8 VDB amplifier with waveforms.

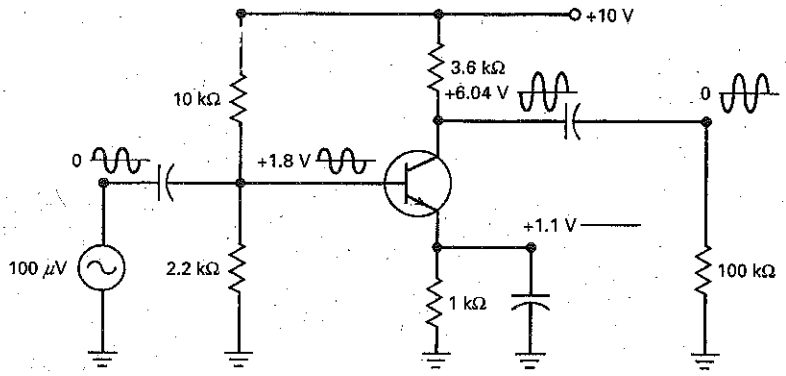

VDB Amplifier

Figure 9-8 shows a voltage-divider-biased (VDB) amplifier. To calculate the dc voltages and currents, mentally open all capacitors. Then, the transistor circuit simplifies to the VDB circuit analyzed in Chap. 8. The quiescent or dc values for this circuit are:

$$V_B = 1.8 \text{ V}$$

$$V_E = 1.1 \text{ V}$$

$$V_C = 6.04 \text{ V}$$

$$I_C = 1.1 \text{ mA}$$

As before, we use a coupling capacitor between the source and base, and another coupling capacitor between the collector and the load resistance. We also need to use a bypass capacitor between the emitter and ground. Without this capacitor, the ac base current would be much smaller. But with the bypass capacitor, we get a much larger voltage gain. The mathematical details of why this happens are discussed in the next chapter.

In Fig. 9-8, the ac source voltage is 100 μV. This is coupled into the base. Because of the bypass capacitor, all of this ac voltage appears across the base-emitter diode. The ac base current then produces an amplified ac collector voltage, as previously described.

GOOD TO KNOW

In Fig. 9-8, the emitter voltage is rock-solid at 1.1 V because of the emitter bypass capacitor. Therefore, any variations in the base voltage appear directly across the BE junction of the transistor. For example, assume that v_{in} = 10 mV pp. At the positive peak of v_{in}, the ac base voltage equals 1.805 V and V_{BE} equals 1.805 V − 1.1 V = 0.705 V. At the negative peak of v_{in}, the ac base voltage decreases to 1.795 V, and then V_{BE} equals 1.795 V − 1.1 V = 0.695 V. The ac variations in V_{BE} (0.705 to 0.695 V) are what produces the ac variations in I_C and V_{CE}.

VDB Waveforms

Notice the voltage waveforms in Fig. 9-8. The ac source voltage is a small sinusoidal voltage with an average value of zero. The base voltage is an ac voltage superimposed on a dc voltage of +1.8 V. The collector voltage is an amplified and inverted ac voltage superimposed on the dc collector voltage of +6.04 V. The load voltage is the same as the collector voltage, except that it has an average value of zero.

Notice also the voltage on the emitter. It is a pure dc voltage of +1.1 V. There is no ac emitter voltage because emitter is at ac ground, a direct result of using a bypass capacitor. This is important to remember because it is useful in troubleshooting. If the bypass capacitor were to open, an ac voltage would appear between the emitter and ground. This symptom would immediately point to the open bypass capacitor as the unique trouble.

Discrete versus Integrated Circuits

The VDB amplifier of Fig. 9-8 is the standard way to build a discrete transistor amplifier. *Discrete* means that all components like resistors, capacitors, and transistors are separately inserted and connected to get the final circuit. A *discrete circuit* differs from an *integrated circuit (IC),* in which all the components are simultaneously created and connected on a *chip,* a piece of semiconductor material. Later chapters will discuss the *op amp,* an IC amplifier that produces voltage gains ~~of more than 100,000~~.

TSEB Circuit

Figure 9-9 shows a two-supply emitter bias (TSEB) amplifier. We analyzed the dc part of the circuit in Chap. 8 and calculate these quiescent voltages:

$$V_B \approx 0 \text{ V}$$

$$V_E = -0.7 \text{ V}$$

$$V_C = 5.32 \text{ V}$$

$$I_C = 1.3 \text{ mA}$$

Figure 9-9 shows two coupling capacitors and an emitter bypass capacitor. The ac operation of the circuit is similar to that of a VDB amplifier. We couple a signal into the base. The signal is amplified to get the collector voltage. The amplified signal is then coupled to the load.

Notice the waveforms. The ac source voltage is a small sinusoidal voltage. The base voltage has a small ac component riding on a dc component of approximately 0 V. The total collector voltage is an inverted sine wave riding on the dc collector voltage of +5.32 V. The load voltage is the same amplified signal with no dc component.

Again, notice the pure dc voltage on the emitter, a direct result of using the bypass capacitor. If the bypass capacitor were to open, an ac voltage would appear at the emitter. This would greatly reduce the voltage gain. Therefore, when troubleshooting an amplifier with bypass capacitors, remember that all ac grounds should have zero ac voltage.

Figure 9-9 TSEB amplifier with waveforms.

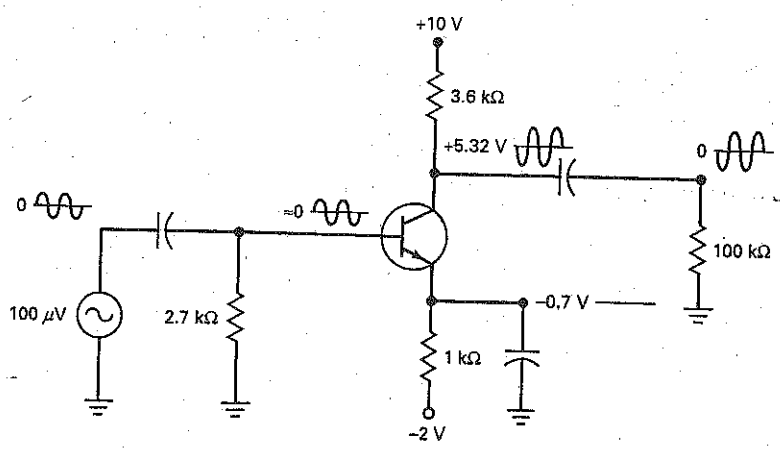

9-3 Small-Signal Operation

Figure 9-10 shows the graph of current versus voltage for the base-emitter diode. When an ac voltage is coupled into the base of a transistor, an ac voltage appears across the base-emitter diode. This produces the sinusoidal variation in V_{BE} shown in Fig. 9-10.

Instantaneous Operating Point

When the voltage increases to its positive peak, the instantaneous operating point moves from Q to the upper point shown in Fig. 9-10. On the other hand, when the sine wave decreases to its negative peak, the instantaneous operating point moves from Q to the lower point.

The total base-emitter voltage of Fig. 9-10 is an ac voltage centered on a dc voltage. The size of the ac voltage determines how far the instantaneous point moves away from the Q point. Large ac base voltages produce large variations, whereas small ac base voltages produce small variations.

Distortion

The ac voltage on the base produces the ac emitter current shown in Fig. 9-10. This ac emitter current has the same frequency as the ac base voltage. For instance, if the ac generator driving the base has a frequency of 1 kHz, the ac emitter current has a frequency of 1 kHz. The ac emitter current also has approximately the same shape as the ac base voltage. If the ac base voltage is sinusoidal, the ac emitter current is approximately sinusoidal.

The ac emitter current is not a perfect replica of the ac base voltage because of the curvature of the graph. Since the graph is curved upward, the positive half cycle of ac emitter current is elongated (stretched) and the negative half cycle is compressed. This stretching and compressing of alternate half cycles is called **distortion.** It is undesirable in high-fidelity amplifiers because it changes the sound of voice and music.

Reducing Distortion

One way to reduce distortion in Fig. 9-10 is by keeping the ac base voltage small. When you reduce the peak value of the base voltage, you reduce the movement of the instantaneous operating point. The smaller this swing or variation, the less the curvature in the graph. If the signal is small enough, the graph appears to be linear.

Figure 9-10 Distortion when signal is too large.

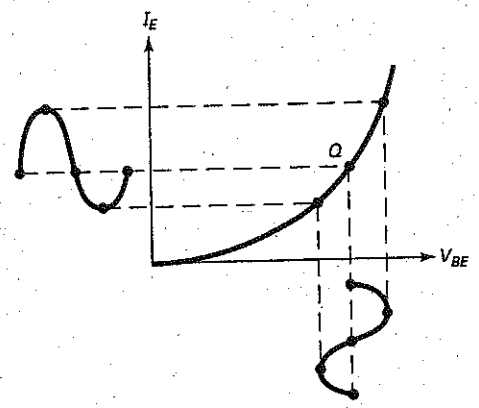

Figure 9-11 Definition of small-signal operation.

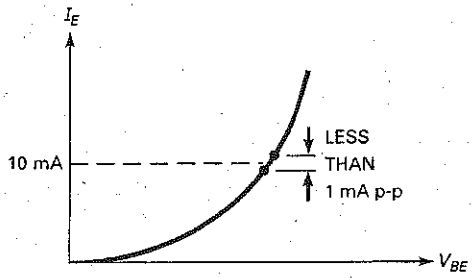

Why is this important? Because there is negligible distortion for a small signal. When the signal is small, the changes in ac emitter current are almost directly proportional to the changes in ac base voltage because the graph is almost linear. In other words, if the ac base voltage is a small enough sine wave, the ac emitter current will also be a small sine wave with no noticeable stretching or compression of half cycles.

The 10 Percent Rule

The total emitter current shown in Fig. 9-10 consists of a dc component and an ac component, which can be written as:

$$I_E = I_{EQ} + i_e$$

where I_E = the total emitter current
I_{EQ} = the dc emitter current
i_e = the ac emitter current

To minimize distortion, the peak-to-peak value of i_e must be small compared to I_{EQ}. Our definition of small-signal operation is:

$$\textbf{Small signal: } i_{e(pp)} < 0.1 I_{EQ} \tag{9-6}$$

This says that the ac signal is small when the peak-to-peak ac emitter current is less than 10 percent of the dc emitter current. For instance, if the dc emitter current is 10 mA, as shown in Fig. 9-11, the peak-to-peak emitter current should be less than 1 mA in order to have small-signal operation.

From now on, we will refer to amplifiers that satisfy the 10 percent rule as **small-signal amplifiers.** This type of amplifier is used at the front end of radio and television receivers because the signal coming in from the antenna is very weak. When coupled into a transistor amplifier, a weak signal produces very small variations in emitter current, much less than the 10 percent rule requires.

Example 9-3

Using Fig. 9-9, find the maximum small signal emitter current.

SOLUTION: First, find the Q point emitter current, I_{EQ}.

$$I_{EQ} = \frac{V_{EE} - V_{BE}}{R_E} \qquad I_{EQ} = \frac{2\text{ V} - 0.7\text{ V}}{1\text{ k}\Omega} \qquad I_{EQ} = 1.3\text{ mA}$$

Then solve for the small signal emitter current $i_{e(pp)}$

$$i_{e(pp)} < 0.1\ I_{EQ}$$

$$i_{e(pp)} = (0.1)(1.3\ \text{mA})$$

$$i_{e(pp)} = 130\ \mu\text{A}_{pp}$$

PRACTICE PROBLEM 9-3 Using Fig. 9-9, change R_E to 1.5 kΩ and calculate the maximum small signal emitter current.

9-4 AC Beta

The current gain in all discussions up to this point has been *dc current gain.* This was defined as:

$$\beta_{dc} = \frac{I_C}{I_B} \tag{9-7}$$

The currents in this formula are the currents at the Q point in Fig. 9-12. Because of the curvature in the graph of I_C versus I_B, the dc current gain depends on the location of the Q point.

Definition

The **ac current gain** is different. It is defined as:

$$\beta = \frac{i_c}{i_b} \tag{9-8}$$

In words, the ac current gain equals the ac collector current divided by the ac base current. In Fig. 9-12, the ac signal uses only a small part of the graph on both sides

Figure 9-12 AC current gain equals ratio of changes.

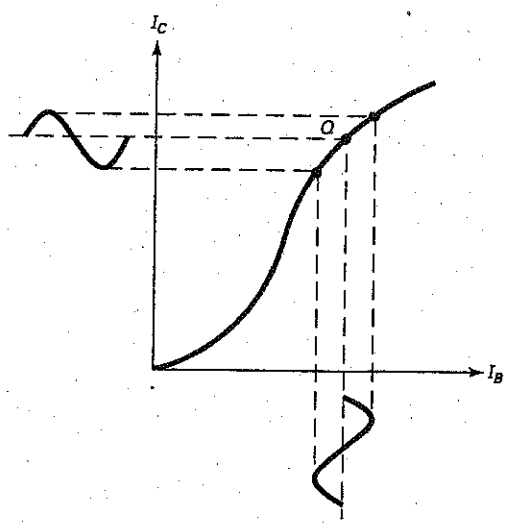

of the Q point. Because of this, the value of the ac current gain is different from the dc current gain, which uses almost all of the graph.

Graphically, β equals the slope of the curve at the Q point in Fig. 9-12. If we were to bias the transistor to a different Q point, the slope of the curve would change, which means that β would change. In other words, the value of β depends on the amount of dc collector current.

On data sheets, β_{dc} is listed as h_{FE} and β is shown as h_{fe}. Notice that capital subscripts are used with dc current gain, and lowercase subscripts with ac current gain. The two current gains are comparable in value, not differing by a large amount. For this reason, if you have the value of one, you can use the same value for the other in preliminary analysis.

Notation

To keep dc quantities distinct from ac quantities, it is standard practice to use capital letters and subscripts for dc quantities. For instance, we have been using:

I_E, I_C, and I_B for the dc currents
V_E, V_C, and V_B for the dc voltages
V_{BE}, V_{CE}, and V_{CB} for the dc voltages between terminals

For ac quantities, we will use lowercase letters and subscripts as follows:

i_e, i_c, and i_b for the ac currents
v_e, v_c, and v_b for the ac voltages
v_{be}, v_{ce}, and v_{cb} for the ac voltages between terminals

Also worth mentioning is the use of capital R for dc resistances and lowercase r for ac resistances. The next section will discuss ac resistance.

9-5 AC Resistance of the Emitter Diode

Figure 9-13 shows a graph of current versus voltage for the emitter diode. When a small ac voltage is across the emitter diode, it produces the ac emitter current shown. The size of this ac emitter current depends on the location of the Q point. Because of the curvature, we get more peak-to-peak ac emitter current when the Q point is higher up the graph.

Figure 9-13 AC resistance of emitter diode.

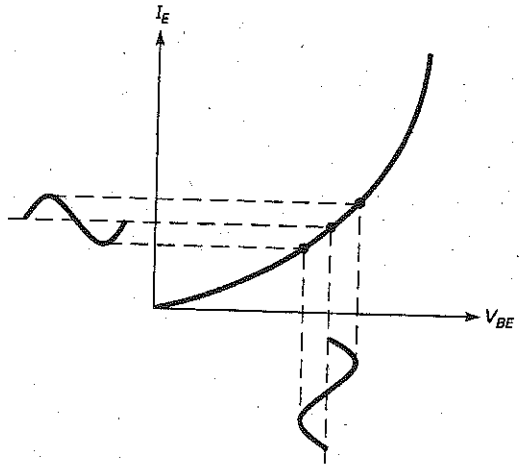

Definition

As discussed in Sec. 9-3, the total emitter current has a dc component and an ac component. In symbols:

$$I_E = I_{EQ} + i_e$$

where I_{EQ} is the dc emitter current and i_e is the ac emitter current.

In a similar way, the total base-emitter voltage of Fig. 9-13 has a dc component and an ac component. Its equation can be written as:

$$V_{BE} = V_{BEQ} + v_{be}$$

where V_{BEQ} is the dc base-emitter voltage and v_{be} is the ac base-emitter voltage.

In Fig. 9-13, the sinusoidal variation in V_{BE} produces a sinusoidal variation in I_E. The peak-to-peak value of i_e depends on the location of the Q point. Because of the curvature in the graph, a fixed v_{be} produces more i_e as the Q point is biased higher up the curve. Stated another way, the ac resistance of the emitter diode decreases when the dc emitter current increases.

The **ac emitter resistance** of the emitter diode is defined as:

$$r'_e = \frac{v_{be}}{i_e} \tag{9-9}$$

This says that the ac resistance of the emitter diode equals the ac base-emitter voltage divided by the ac emitter current. The prime (′) in r'_e is a standard way to indicate that the resistance is inside the transistor.

For instance, Fig. 9-14 shows an ac base-emitter voltage of 5 mV pp. At the given Q point, this sets up an ac emitter current of 100 μA pp. The ac resistance of the emitter diode is:

$$r'_e = \frac{5\text{ mV}}{100\ \mu\text{A}} = 50\ \Omega$$

As another example, assume that a higher Q point in Fig. 9-14 has $v_{be} = 5$ mV and $i_e = 200\ \mu$A. Then, the ac resistance decreases to:

$$r'_e = \frac{5\text{ mV}}{200\ \mu\text{A}} = 25\ \Omega$$

The point is this: The ac emitter resistance always decreases when the dc emitter current increases, because v_{be} is essentially a constant value.

Figure 9-14 Calculating r'_e.

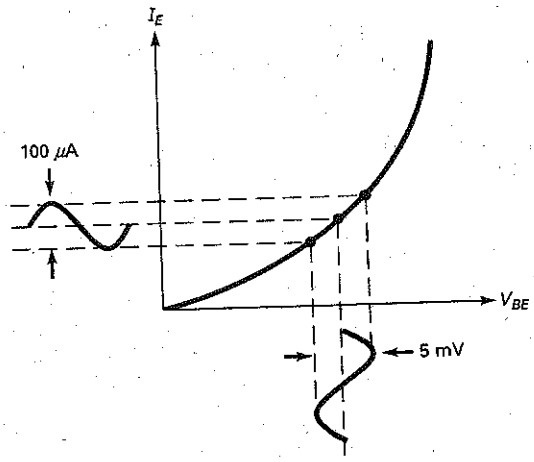

Formula for AC Emitter Resistance

With solid-state physics and calculus, it is possible to derive the following remarkable formula for the ac emitter resistance:

$$r'_e = \frac{25\text{ mV}}{I_E} \tag{9-10}$$

This says that the ac resistance of the emitter diode equals 25 mV divided by the dc emitter current.

This formula is remarkable because of its simplicity and the fact that it applies to all transistor types. It is widely used in industry to calculate a preliminary value for the ac resistance of the emitter diode. The derivation assumes small-signal operation, room temperature, and an abrupt rectangular base-emitter junction. Since commercial transistors have gradual and nonrectangular junctions, there will be some deviations from Eq. (9-10). In practice, almost all commercial transistors have an ac emitter resistance between 25 mV/I_E and 50 mV/I_E.

The reason r'_e is important is because it determines the voltage gain. The smaller it is, the higher the voltage gain. Chapter 10 will show you how to use r'_e to calculate the voltage gain of a transistor amplifier.

Example 9-4

MultiSim

What does r'_e equal in the base-biased amplifier of Fig. 9-15*a*?

Figure 9-15 (*a*) Base-biased amplifier; (*b*) VDB amplifier; (*c*) TSEB amplifier.

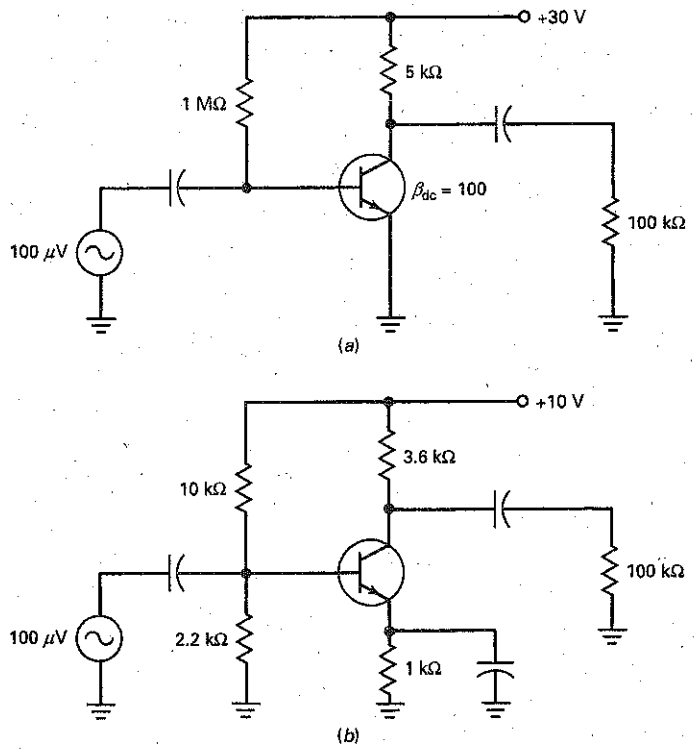

Figure 9-15 (continued)

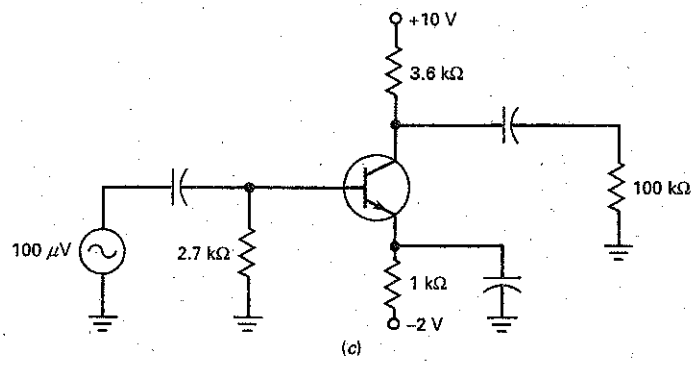

SOLUTION Earlier, we calculated a dc emitter current of approximately 3 mA for this circuit. With Eq. (9-10), the ac resistance of the emitter diode is:

$$r'_e = \frac{25\text{ mV}}{3\text{ mA}} = 8.33\ \Omega$$

Example 9-5

MultiSim

In Fig. 9-15*b*, what does r'_e equal?

SOLUTION We analyzed this VDB amplifier earlier and calculated a dc emitter current of 1.1 mA. The ac resistance of the emitter diode is:

$$r'_e = \frac{25\text{ mV}}{1.1\text{ mA}} = 22.7\ \Omega$$

Example 9-6

MultiSim

What is the ac resistance of the emitter diode for the two-supply emitter-bias amplifier of Fig. 9-15*c*?

SOLUTION From an earlier calculation, we got a dc emitter current of 1.3 mA. Now, we can calculate the ac resistance of the emitter diode:

$$r'_e = \frac{25\text{ mV}}{1.3\text{ mA}} = 19.2\ \Omega$$

PRACTICE PROBLEM 9-6 Using Fig. 9-15*c*, change the V_{EE} supply to −3 V and calculate r'_e.

9-6 Two Transistor Models

To analyze the ac operation of a transistor amplifier, we need an ac equivalent circuit for a transistor. In other words, we need a model for the transistor that simulates how it behaves when an ac signal is present.

The T Model

One of the earliest ac models was the **Ebers-Moll model** shown in Fig. 9-16. As far as a small ac signal is concerned, the emitter diode of a transistor acts like an ac resistance r'_e and the collector diode acts like a current source i_c. Since the Ebers-Moll model looks like a T on its side, the equivalent circuit is also called the **T model.**

When analyzing a transistor amplifier, we can replace each transistor by a T model. Then, we can calculate value of r'_e and other ac quantities like voltage gain. The details are discussed in the next chapter.

When an ac input signal drives a transistor amplifier, an ac base-emitter voltage v_{be} is across the emitter diode, as shown in Fig. 9-17*a*. This produces an ac base current i_b. The ac voltage source has to supply this ac base current, so that the transistor amplifier will work properly. Stated another way, the ac voltage source is loaded by the input impedance of the base.

Figure 9-17*b* illustrates the idea. Looking into the base of the transistor, the ac voltage source sees an input impedance $z_{in(base)}$. At low frequencies, this impedance is purely resistive and defined as:

$$z_{in(base)} = \frac{v_{be}}{i_b} \tag{9-11}$$

Applying Ohm's law to the emitter diode of Fig. 9-17*a*, we can write:

$$v_{be} = i_e r'_e$$

Figure 9-16 T model of a transistor.

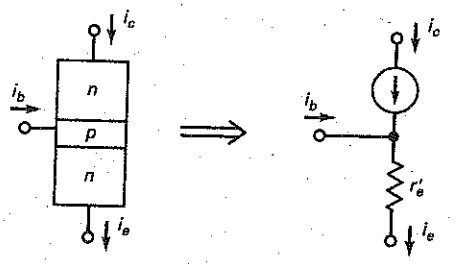

Figure 9-17 Defining the input impedance of the base.

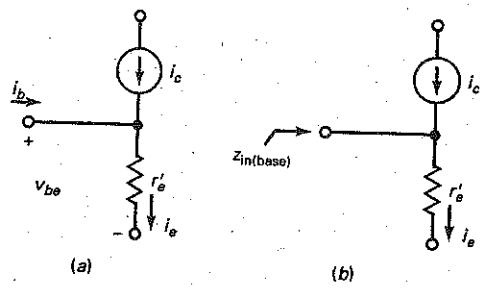

Figure 9-18 π model of a transistor.

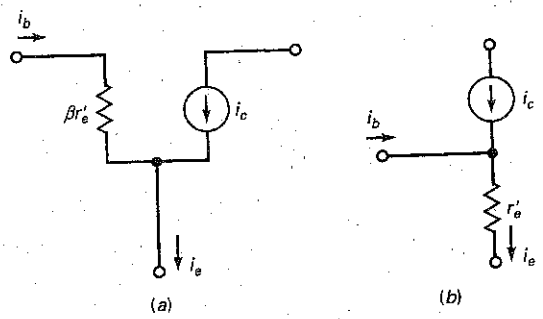

Substitute this equation into the preceding one to get:

$$z_{in(base)} = \frac{v_{be}}{i_b} = \frac{i_c r'_e}{i_b}$$

Since $i_e \approx i_c$, the foregoing equation simplifies to:

$$z_{in(base)} = \beta r'_e \tag{9-12}$$

This equation tells us that the input impedance of the base is equal to the ac current gain times the ac resistance of the emitter diode.

The π Model

Figure 9-18*a* shows the **π model** of a transistor. It's a visual representation of Eq. (9-12). The π model is easier to use than the T model (Fig. 9-18*b*) because the input impedance is not obvious when you look at the T model. On the other hand, the π model clearly shows that an input impedance of $\beta r'_e$ will load the ac voltage source driving the base.

Since the π and T models are ac equivalent circuits for a transistor, we can use either one when analyzing an amplifier. Most of the time, we will use the π model. With some circuits like the differential amps in Chap. 17, the T model gives a better insight into the circuit action. Both models are widely used in industry.

9-7 Analyzing an Amplifier

Amplifier analysis is complicated because both dc and ac sources are in the same circuit. To analyze amplifiers, we can calculate the effect of the dc sources, and then the effect of the ac sources. When using the superposition theorem in this analysis, the effect of each source acting alone is added to get the total effect of all sources acting simultaneously.

The DC Equivalent Circuit

The simplest way to analyze an amplifier is to split the analysis into two parts: a dc analysis and an ac analysis. In the dc analysis, we calculate the dc voltages and currents. To do this, we mentally open all capacitors. The circuit that remains is the **dc equivalent circuit.**

With the dc equivalent circuit, you can calculate the transistor currents and voltages as needed. If you are troubleshooting, approximate answers are adequate. The most important current in the dc analysis is the dc emitter current. This is needed to calculate r'_e for the ac analysis.

GOOD TO KNOW

There are other, more accurate transistor equivalent circuits (models) in addition to those shown in Figs. 9-16, 9-17, and 9-18. A highly accurate equivalent circuit will include something called the *base spreading resistance* r'_b and the *internal resistance* r'_c of the collector current source. This model is used if exact answers are desired.

Figure 9-19 DC voltage source is an ac short.

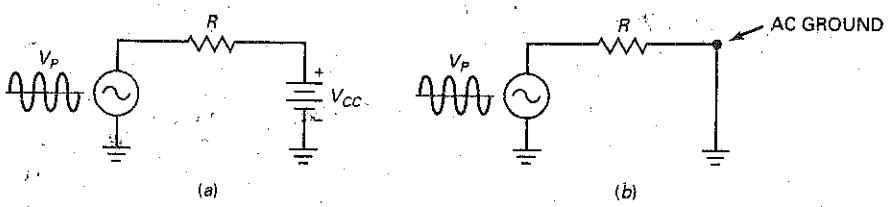

AC Effect of a DC Voltage Source

Figure 9-19*a* shows a circuit with ac and dc sources. What is the ac current in a circuit like this? As far as the ac current is concerned, the dc voltage source acts like an ac short, as shown in Fig. 9-19*b*. Why? Because a dc voltage source has a constant voltage across it. Therefore, any ac current flowing through it cannot produce an ac voltage across it. If no ac voltage can exist, the dc voltage source is equivalent to an ac short.

Another way to understand the idea is to recall the **superposition theorem** discussed in basic electronics courses. In applying superposition to Fig. 9-19*a*, we can calculate the effect of each source acting separately while the other is reduced to zero. Reducing the dc voltage source to zero is equivalent to shorting it. Therefore, to calculate the effect of the ac source in Fig. 9-19*a*, we can short the dc voltage source.

From now on, we will short all dc voltage sources when analyzing the ac operation of an amplifier. As shown in Fig. 9-19*b*, this means that each dc voltage supply point acts like an ac ground.

AC Equivalent Circuit

After analyzing the dc equivalent circuit, the next step is to analyze the **ac equivalent circuit.** This is the circuit that remains after you have mentally shorted all capacitors and dc voltage sources. The transistor can be replaced by either the π model or the T model. In the next chapter, we will show the mathematical details of ac analysis. For the remainder of this chapter, let us focus on how to get the ac equivalent circuit for the three amplifiers discussed up to now: base-biased, VDB, and TSEB.

Base-Biased Amplifier

Figure 9-20*a* is a base-biased amplifier. After mentally opening all capacitors and analyzing the dc equivalent circuit, we are ready for the ac analysis. To get the ac equivalent circuit, we short all capacitors and dc voltage sources. Then, the point labeled $+V_{CC}$ is an ac ground.

Figure 9-20*b* shows the ac equivalent circuit. As you can see, the transistor has been replaced by its π model. In the base circuit, the ac input voltage appears across R_B in parallel with $\beta r'_e$. In the collector circuit, the current source pumps an ac current of i_c through R_C in parallel with R_L.

VDB Amplifier

Figure 9-21*a* is a VDB amplifier, and Fig. 9-21*b* is its ac equivalent circuit. As you can see, all capacitors have been shorted, the dc supply point has become an ac ground, and the transistor has been replaced by its π model. In the base circuit, the ac input voltage appears across R_1 in parallel with R_2 in parallel with $\beta r'_e$. In the collector circuit, the current source pumps an ac current of i_c through R_C in parallel with R_L.

Figure 9-20 (*a*) Base-biased amplifier; (*b*) ac equivalent circuit.

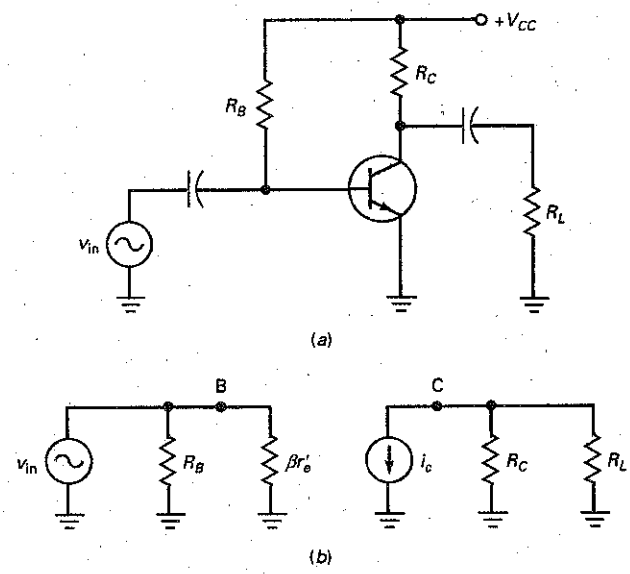

Figure 9-21 (*a*) VDB amplifier; (*b*) ac equivalent circuit.

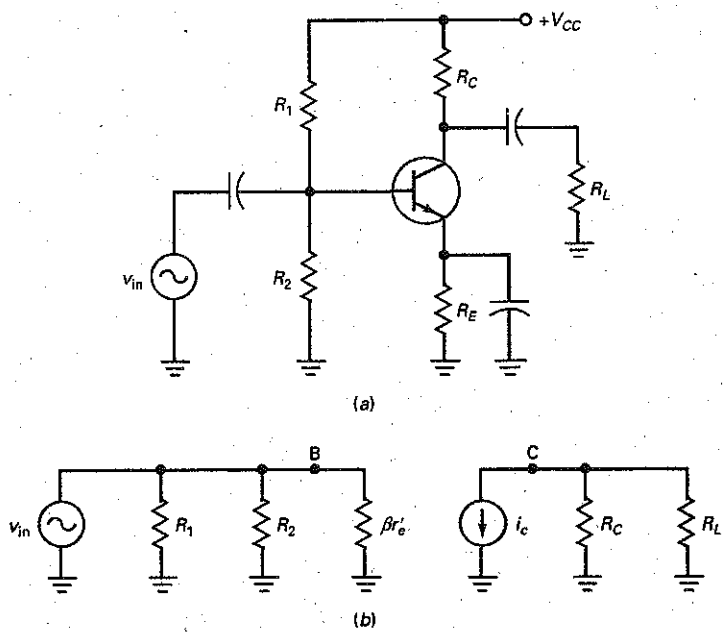

TSEB Amplifier

Our last example is the two-supply emitter-bias circuit of Fig. 9-22*a*. After analyzing the dc equivalent circuit, we can draw the ac equivalent circuit of Fig. 9-22*b*. Again, all capacitors are shorted, the dc source voltage becomes an ac ground, and the transistor is replaced by its π model. In the base circuit, the ac

Figure 9-22 (a) TSEB amplifier; (b) ac equivalent circuit.

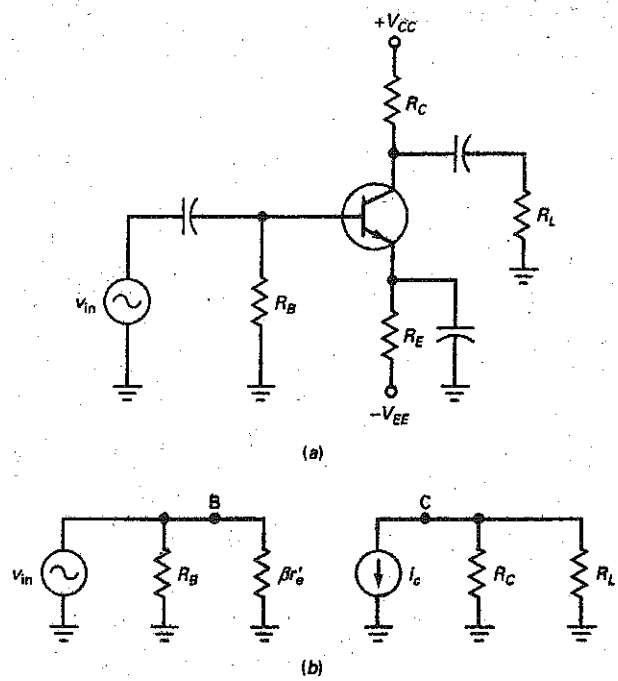

input voltage appears across R_B in parallel with $\beta r'_e$. In the collector circuit, the current source pumps an ac current of i_c through R_C in parallel with R_L.

CE Amplifiers

The three different amplifiers of Figs. 9-20, 9-21, and 9-22 are examples of a **common-emitter (CE) amplifier.** You can recognize a CE amplifier immediately because its emitter is at ac ground. With a CE amplifier, the ac signal is coupled into the base, and the amplified signal appears at the collector.

Two other basic transistor amplifiers are possible. **The common-base (CB)** amplifier and the **common-collector (CC) amplifier.** The CB amplifier has its base at ac ground, and the CC amplifier has its collector at ac ground. They are useful in some applications, but are not as popular as the CE amplifier. Later chapters discuss the CB and CC amplifiers.

Main Ideas

The foregoing method of analysis works for all amplifiers. You start with the dc equivalent circuit. After calculating the dc voltages and currents, you analyze the ac equivalent circuit. The crucial ideas in getting the ac equivalent circuit are:

1. Short all coupling and bypass capacitors.
2. Visualize all dc supply voltages as ac grounds.
3. Replace the transistor by its π or T model.
4. Draw the ac equivalent circuit.

Subsequent chapters will use this method to calculate the voltage gain, input impedance, and other characteristics of amplifiers.

The process of using superposition to analyze a VDB circuit is shown in Summary Table 9-1.

Summary Table 9–1 VDB DC and AC Equivalents

Original circuit

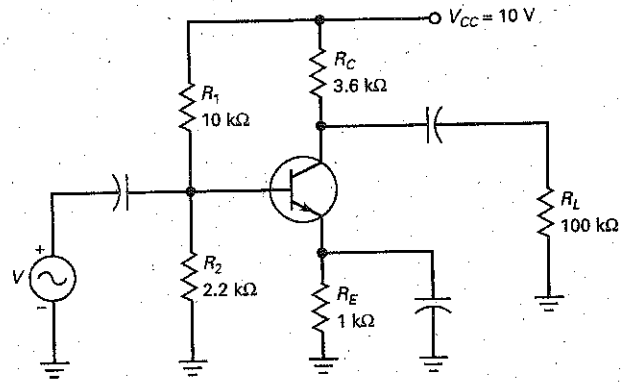

DC circuit

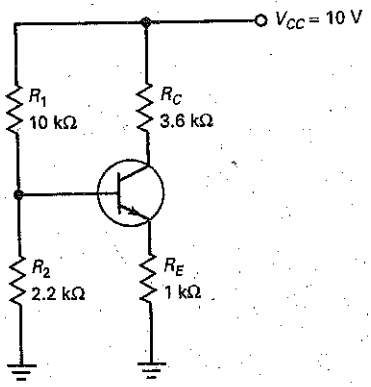

- Open all coupling and bypass capacitors.
- Redraw the circuit.
- Solve the dc circuit's Q point:

  $V_B = 1.8$ V
  $V_E = 1.1$ V
  $I_E = 1.1$ mA
  $V_{CE} = 4.94$ V

AC π model

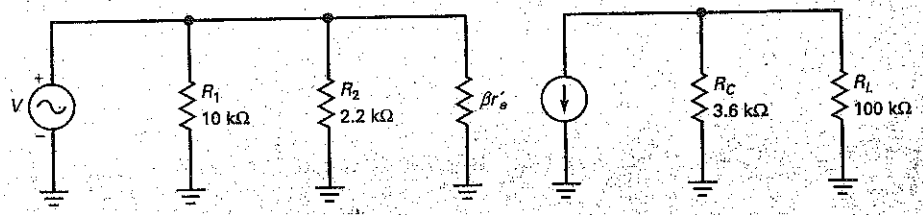

AC T model

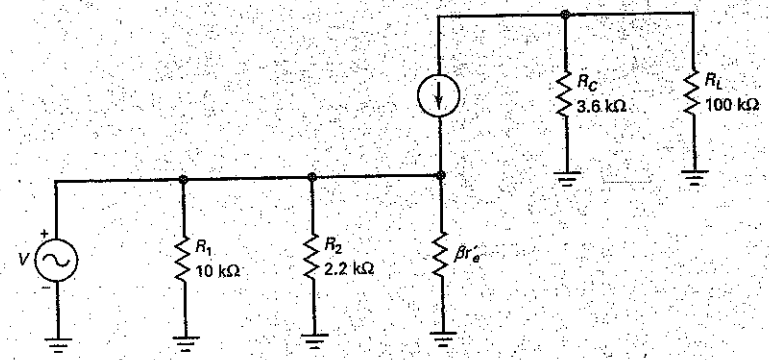

- Short all coupling and bypass capacitors.
- Visualize all dc supply voltages as ac grounds.
- Replace the transistor by its π or T model.
- Draw the ac equivalent circuit.
- $r'_e = \dfrac{25 \text{ mV}}{I_{EQ}} = 22.7\ \Omega$.

9-8 AC Quantities on the Data Sheet

Refer to the partial data sheet of a 2N3904 in Fig. 9-23 during the following discussion. The ac quantities appear in the section labeled "Small-Signal Characteristics." In this section, you will find four new quantities labeled h_{fe}, h_{ie}, h_{re}, and h_{oe}. These are called h parameters. What are they?

H Parameters

When the transistor was first invented, an approach known as the h parameters was used to analyze and design transistor circuits. This mathematical approach models the transistor on what is happening at its terminals without regard for the physical processes taking place inside the transistor.

A more practical approach is the one we are using. It is called the r' parameter method, and it uses quantities like β and r'_e. With this approach, you can use Ohm's law and other basic ideas in the analysis and design of transistor circuits. This is why the r' parameters are better suited to most people.

This does not mean that the h parameters are useless. They have survived on data sheets because they are easier to measure than r' parameters. When you read data sheets, therefore, don't look for β, r'_e, and other r' parameters. You won't find them. Instead, you will find h_{fe}, h_{ie}, h_{re}, and h_{oe}. These four h parameters give useful information when translated into r' parameters.

Relations Between R and H Parameters

For instance, h_{fe} given in the "Small-Signal Characteristics" section of the data sheet is identical to the ac current gain. In symbols this is represented as:

$$\beta = h_{fe}$$

The data sheet lists a minimum h_{fe} of 100 and a maximum of 400. Therefore, β may be as low as 100 or as high as 400. These values are for a collector current of 1 mA and a collector-emitter voltage of 10 V.

Another h parameter is the quantity h_{ie}, equivalent to the input impedance. The data sheets give a minimum h_{ie} of 1 kΩ and a maximum of 10 kΩ. The quantity h_{ie} is related to r' parameters like this:

$$r'_e = \frac{h_{ie}}{h_{fe}} \tag{9-13}$$

For instance, the maximum values of h_{ie} and h_{fe} are 10 kΩ and 400. Therefore:

$$r'_e = \frac{10\ \text{k}\Omega}{400} = 25\ \Omega$$

The last two h parameters, h_{re} and h_{oe}, are not needed for troubleshooting and basic design.

Other Quantities

Other quantities listed under "Small-Signal Characteristics" include f_T, C_{ibo}, C_{obo}, and NF. The first, f_T, gives information about the high-frequency limitations on a 2N3904. The second and third quantities, C_{ibo} and C_{obo}, are the input and output capacitances of the device. The final quantity, NF, is the noise figure; it indicates how much noise the 2N3904 produces.

The data sheet of a 2N3904 includes a lot of graphs, which are worth looking at. For instance, the graph on the data sheet labelled *current gain* shows that h_{fe} increases from approximately 70 to 160 when the collector current increases from 0.1 mA to 10 mA. Notice that h_{fe} is approximately 125 when the

Figure 9-23 The 2N3904 partial data sheet. (Copyright Semiconductor Components Industries, LLC; used by permission)

2N3903, 2N3904

ELECTRICAL CHARACTERISTICS (T_A = 25°C unless otherwise noted)

Characteristic		Symbol	Min	Max	Unit
SMALL-SIGNAL CHARACTERISTICS					
Current-Gain-Bandwidth Product (I_C = 10 mAdc, V_{CE} = 20 Vdc, f = 100 MHz)	2N3903	f_T	250	-	MHz
	2N3904		300	-	
Output Capacitance (V_{CB} = 0.5 Vdc, I_E = 0, f = 1.0 MHz)		C_{obo}	-	4.0	pF
Input Capacitance (V_{EB} = 0.5 Vdc, I_C = 0, f = 1.0 MHz)		C_{ibo}	-	8.0	pF
Input Impedance (I_C = 1.0 mAdc, V_{CE} = 10 Vdc, f = 1.0 kHz)	2N3903	h_{ie}	1.0	8.0	kΩ
	2N3904		1.0	10	
Voltage Feedback Ratio (I_C = 1.0 mAdc, V_{CE} = 10 Vdc, f = 1.0 kHz)	2N3903	h_{re}	0.1	5.0	$\times 10^{-4}$
	2N3904		0.5	8.0	
Small-Signal Current Gain (I_C = 1.0 mAdc, V_{CE} = 10 Vdc, f = 1.0 kHz)	2N3903	h_{fe}	50	200	-
	2N3904		100	400	
Output Admittance (I_C = 1.0 mAdc, V_{CE} = 10 Vdc, f = 1.0 kHz)		h_{oe}	1.0	40	μmhos
Noise Figure (I_C = 100 μAdc, V_{CE} = 5.0 Vdc, R_S = 1.0 kΩ, f = 1.0 kHz)	2N3903	NF	-	6.0	dB
	2N3904		-	5.0	

H PARAMETERS

V_{CE} = 10 Vdc, f = 1.0 kHz, T_A = 25°C

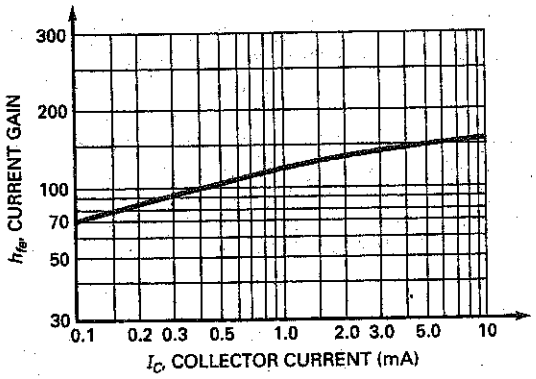

Current Gain

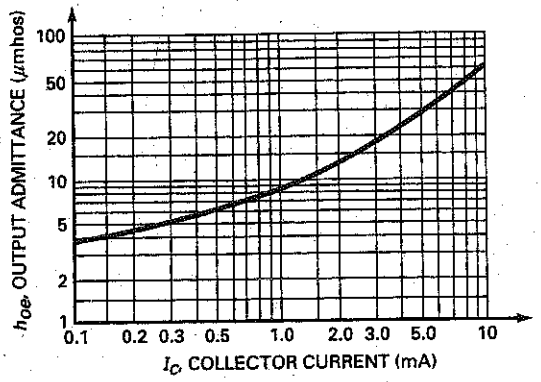

Output Admittance

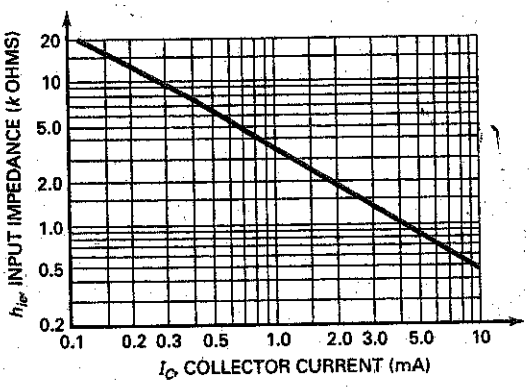

Input Impedance

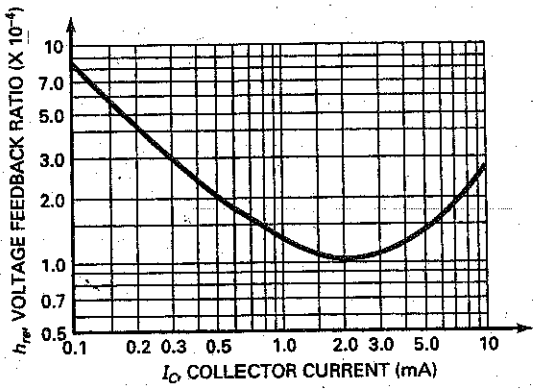

Voltage Feedback Ratio

collector current is 1 mA. This graph is for a typical 2N3904 at room temperature. If you recall that the minimum and maximum h_{fe} values were given as 100 and 400, then you can see that h_{fe} will have a large variation in mass production. Also worth remembering is that h_{fe} changes with temperature.

Take a look at the graph labelled Input Impedance on the data sheet of the 2N3904. Notice how h_{ie} decreases from approximately 20 kΩ to 500 Ω when the collector current increases from 0.1 mA to 10 mA. Equation (9-13) tells us how to calculate r'_e. It says to divide h_{ie} by h_{fe} to get r'_e. Let's try it. If you read the value of h_{fe} and h_{ie} at a collector current of 1 mA from the graphs on the data sheet, you get these approximate values: $h_{fe} = 125$ and $h_{ie} = 3.6$ kΩ. With Eq. (9-13):

$$r'_e = \frac{3.6\ \text{k}\Omega}{125} = 28.8\ \Omega$$

The ideal value of r'_e is:

$$r'_e = \frac{25\ \text{mV}}{1\ \text{mA}} = 25\ \Omega$$

Summary

SEC. 9-1 BASE-BIASED AMPLIFIER

Good coupling occurs when the reactance of the coupling capacitor is much smaller than the resistance at the lowest frequency of the ac source. In a base-biased amplifier, the input signal is coupled into the base. This produces an ac collector voltage. The amplified and inverted ac collector voltage is then coupled to the load resistance.

SEC. 9-2 EMITTER-BIASED AMPLIFIER

Good bypassing occurs when the reactance of the coupling capacitor is much smaller than the resistance at the lowest frequency of the ac source. The bypassed point is an ac ground. With either a VDB or a TSEB amplifier, the ac signal is coupled into the base. The amplified ac signal is then coupled to the load resistance.

SEC. 9-3 SMALL-SIGNAL OPERATION

The ac base voltage has a dc component and an ac component. These set up dc and ac components of emitter current. One way to avoid excessive distortion is to use small-signal operation. This means keeping the peak-to-peak ac emitter current less than one-tenth of the dc emitter current.

SEC. 9-4 AC BETA

The ac beta of a transistor is defined as the ac collector current divided by the ac base current. The values of the ac beta usually differ only slightly from the values of the dc beta. When troubleshooting, you can use the same value for either beta. On data sheets, h_{FE} is equivalent to β_{dc}, and h_{fe} is equivalent to β.

SEC. 9-5 AC RESISTANCE OF THE EMITTER DIODE

The base-emitter voltage of a transistor has a dc component V_{BEQ} and an ac component v_{be}. The ac base-emitter voltage sets up an ac emitter current of i_e. The ac resistance of the emitter diode is defined as v_{be} divided by i_e. With mathematics, we can prove that the ac resistance of the emitter diode equals 25 mV divided by dc emitter current.

SEC. 9-6 TWO TRANSISTOR MODELS

As far as ac signals are concerned, a transistor can be replaced by either of two equivalent circuits: the π model or the T model. The π model indicates that the input impedance of the base is $\beta r'_e$.

SEC. 9-7 ANALYZING AN AMPLIFIER

The simplest way to analyze an amplifier is to split the analysis into two parts: a dc analysis and an ac analysis. In the dc analysis, the capacitors are open. In the ac analysis, the capacitors are shorted and the dc supply points are ac grounds.

SEC. 9-8 AC QUANTITIES ON THE DATA SHEET

The h parameters are used on data sheets because they are easier to measure than r' parameters. The r' parameters are easier to use in analysis because we can use Ohm's law and other basic ideas. The most important quantities are the data sheet are h_{fe} and h_{ie}. They can be easily converted into β and r'_e.

Definitions

(9-1) Good coupling:

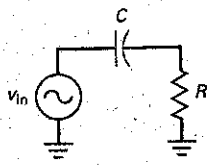

$X_C < 0.1R$

(9-2) Voltage gain:

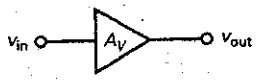

$$A_V = \frac{v_{out}}{v_{in}}$$

(9-5) Good bypassing:

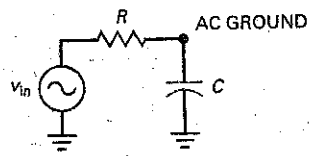

$X_C < 0.1R$

(9-6) Small signal:

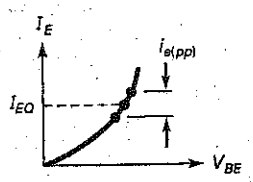

$i_{e(pp)} < 0.1 I_{EQ}$

(9-7) DC current gain:

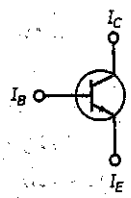

$$\beta_{dc} = \frac{I_C}{I_B}$$

(9-8) AC current gain:

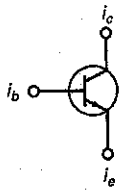

$$\beta = \frac{i_c}{i_b}$$

(9-9) AC resistance:

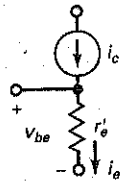

$$r'_e = \frac{v_{be}}{i_c}$$

(9-11) Input impedance:

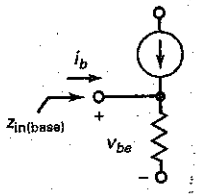

$$z_{in(base)} = \frac{v_{be}}{i_b}$$

Derivations

(9-3) AC output voltage:

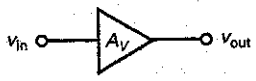

$$v_{out} = A_V v_{in}$$

(9-4) AC input voltage:

$$v_{in} = \frac{v_{out}}{A_V}$$

(9-10) AC resistance:

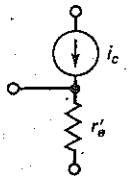

$$r'_e = \frac{25\text{ mV}}{I_E}$$

(9-12) Input impedance:

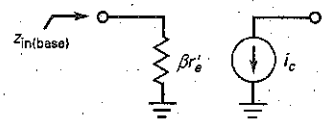

$$z_{in(base)} = \beta r'_e$$

Student Assignments

1. **For dc, the current in a coupling circuit is**
   a. Zero
   b. Maximum
   c. Minimum
   d. Average

2. **The current in a coupling circuit for high frequencies is**
   a. Zero
   b. Maximum
   c. Minimum
   d. Average

3. **A coupling capacitor is**
   a. A dc short
   b. An ac open
   c. A dc open and an ac short
   d. A dc short and an ac open

4. **In a bypass circuit, the top of a capacitor is**
   a. An open
   b. A short
   c. An ac ground
   d. A mechanical ground

5. **The capacitor that produces an ac ground is called a**
   a. Bypass capacitor
   b. Coupling capacitor
   c. DC open
   d. AC open

6. **The capacitors of a CE amplifier appear to be**
   a. Open to ac
   b. Shorted to dc
   c. Open to supply voltage
   d. Shorted to ac

7. **Reducing all dc sources to zero is one of the steps in getting the**
   a. DC equivalent circuit
   b. AC equivalent circuit
   c. Complete amplifier circuit
   d. Voltage-divider biased circuit

8. **The ac equivalent circuit is derived from the original circuit by shorting all**
   a. Resistors
   b. Capacitors
   c. Inductors
   d. Transistors

9. **When the ac base voltage is too large, the ac emitter current is**
   a. Sinusoidal
   b. Constant
   c. Distorted
   d. Alternating

10. **In a CE amplifier with a large input signal, the positive half cycle of the ac emitter current is**
    a. Equal to the negative half cycle
    b. Smaller than the negative half cycle
    c. Larger than the negative half cycle
    d. Equal to the negative half cycle

11. **AC emitter resistance equals 25 mV divided by the**
    a. Quiescent base current
    b. DC emitter current
    c. AC emitter current
    d. Change in collector current

12. **To reduce the distortion in a CE amplifier, reduce the**
    a. DC emitter current
    b. Base-emitter voltage
    c. Collector current
    d. AC base voltage

13. **If the ac voltage across the emitter diode is 1 mV and the ac emitter current is 100 μA, the ac resistance of the emitter diode is**
    a. 1 Ω
    b. 10 Ω
    c. 100 Ω
    d. 1 kΩ

14. **A graph of ac emitter current versus ac base-emitter voltage applies to the**
    a. Resistor
    b. Emitter diode
    c. Collector diode
    d. Power supply

15. **The output voltage of a CE amplifier is**
    a. Amplified
    b. Inverted
    c. 180° out of phase with the input
    d. All of the above

16. **The emitter of a CE amplifier has no ac voltage because of the**
    a. DC voltage on it
    b. Bypass capacitor
    c. Coupling capacitor
    d. Load resistor

17. **The voltage across the load resistor of a capacitor-coupled CE amplifier is**
    a. DC and ac
    b. DC only
    c. AC only
    d. Neither dc nor ac

18. **The ac collector current is approximately equal to the**
   a. AC base current
   b. AC emitter current
   c. AC source current
   d. AC bypass current

19. **The ac emitter current times the ac emitter resistance equals the**
   a. DC emitter voltage
   b. AC base voltage
   c. AC collector voltage
   d. Supply voltage

20. **The ac collector current equals the ac base current times the**
   a. AC collector resistance
   b. DC current gain
   c. AC current gain
   d. Generator voltage

21. **When the emitter resistance R_E doubles, the ac emitter resistance**
   a. Increases
   b. Decreases
   c. Remains the same
   d. Cannot be determined

Problems

SEC. 9-1 BASE-BIASED AMPLIFIER

9-1 **MultiSim** In Fig. 9-24, what is the lowest frequency at which good coupling exists?

Figure 9-24

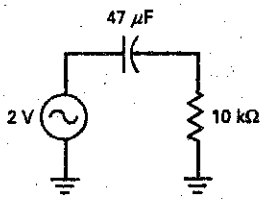

9-2 **MultiSim** If the load resistance is changed to 1 kΩ in Fig. 9-24, what is the lowest frequency for good coupling?

9-3 **MultiSim** If the capacitor is changed to 100 μF in Fig. 9-24, what is the lowest frequency for good coupling?

9-4 If the lowest input frequency of Fig. 9-24 is 100 Hz, what C value is required for good coupling?

SEC. 9-2 EMITTER-BIASED AMPLIFIER

9-5 In Fig. 9-25, what is the lowest frequency at which good bypassing exists?

9-6 If the series resistance is changed to 10 kΩ in Fig. 9-25, what is the lowest frequency for good bypassing?

Figure 9-25

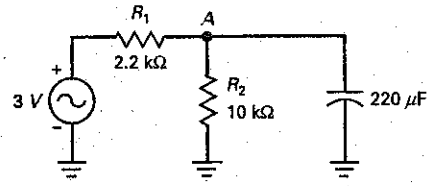

9-7 If the capacitor is changed to 47 μF in Fig. 9-25, what is the lowest frequency for good bypassing?

9-8 If the lowest input frequency of Fig. 9-25 is 1 kHz, what C value is required for effective bypassing?

SEC. 9-3 SMALL-SIGNAL OPERATION

9-9 If we want small-signal operation in Fig. 9-26, what is the maximum allowable ac emitter current?

9-10 The emitter resistor of Fig. 9-26 is doubled. If we want small-signal operation in Fig. 9-26, what is the maximum allowable ac emitter current?

SEC. 9-4 AC BETA

9-11 If an ac base current of 100 μA produces an ac collector current of 15 mA, what is the ac beta?

9-12 If the ac beta is 200 and the ac base current is 12.5 μA, what is the ac collector current?

9-13 If the ac collector current is 4 mA and the ac beta is 100, what is the ac base current?

Figure 9-26

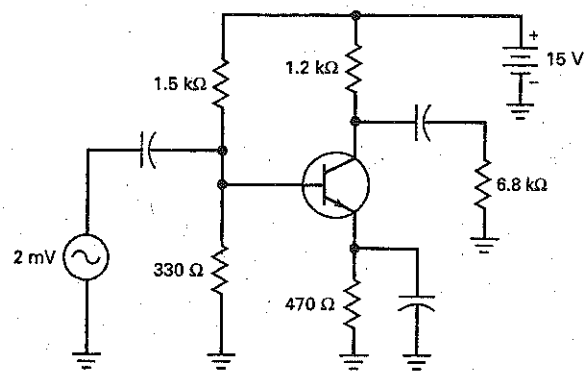

SEC. 9-5 AC RESISTANCE OF THE EMITTER DIODE

9-14 MultiSim What is the ac resistance of the emitter diode in Fig. 9-26?

9-15 MultiSim If the emitter resistance of Fig. 9-26 is doubled, what is the ac resistance of the emitter diode?

SEC. 9-6 TWO TRANSISTOR MODELS

9-16 What is the input impedance of the base in Fig. 9-26 if $\beta = 200$?

9-17 If the emitter resistance is doubled in Fig. 9-26, what is the input impedance of the base with $\beta = 200$?

9-18 If the 1.2 kΩ resistance is changed to 680 Ω in Fig. 9-26, what is the input impedance of the base if $\beta = 200$?

SEC. 9-7 ANALYZING AN AMPLIFIER

9-19 MultiSim Draw the ac equivalent circuit for Fig. 9-26 with $\beta = 150$.

9-20 Double all the resistances in Fig. 9-26. Then, draw the ac equivalent circuit for an ac current gain of 300.

SEC. 9-8 AC QUANTITIES ON THE DATA SHEET

9-21 What are the minimum and maximum values listed under "Small-Signal Characteristics" in Fig. 9-23 for the h_{fe} of a 2N3903? For what collector current are these values given? For what temperature are these values given?

9-22 Refer to the data sheet of a 2N3904 for the following. What is the typical value of r'_e that you can calculate from the h parameter if the transistor operates at a collector current of 5 mA? Is this smaller or larger than the ideal value of r'_e calculated with 25 mV/I_E?

Critical Thinking

9-23 Somebody has built the circuit of Fig. 9-24. The builder cannot understand why a very small dc voltage is measured across the 10 kΩ when the source is 2 V at zero frequency. Can you explain what is happening?

9-24 Assume that you are in the laboratory testing the circuit of Fig. 9-25. As you increase the frequency of the generator, the voltage at node A decreases until it becomes too small to measure. If you continue to increase the frequency well above 10 MHz, the voltage at node A begins to increase. Can you explain why this happens?

9-25 In the rule for good coupling, R represents all the resistance that is in series with the coupling capacitor. With this hint in mind, what is the lowest frequency for good coupling in Fig. 9-27*a*?

9-26 What is the lowest frequency for good bypassing in Fig. 9-27*b*? (*Hint:* Thevenin resistance.)

9-27 In the two-stage amplifier of Fig. 9-28, what is the input impedance of the first base if the ac current gain is 250? If the second transistor has $\beta = 100$, what is the input impedance of the second base?

9-28 Draw the ac equivalent circuit for Fig. 9-28 using $\beta = 200$ for both transistors.

9-29 In Fig. 9-26, the Thevenin resistance seen by the bypass capacitor is 30 Ω. If the emitter is supposed to be ac ground over a frequency range of 20 Hz to 20 kHz, what size should the bypass capacitor be?

Figure 9-27

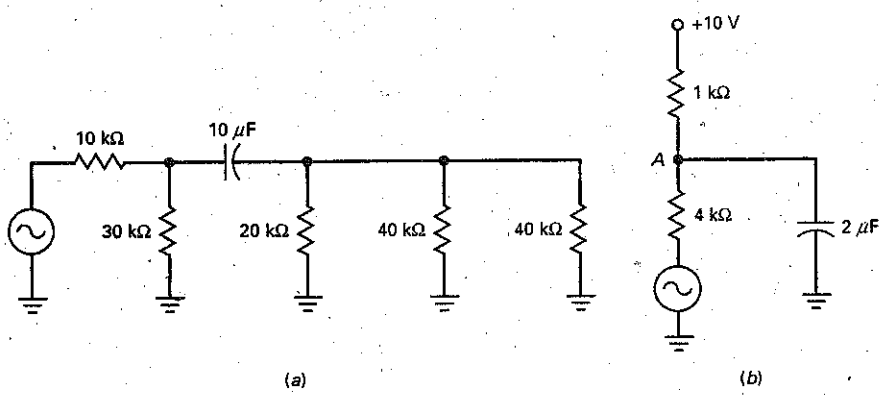

Figure 9-28

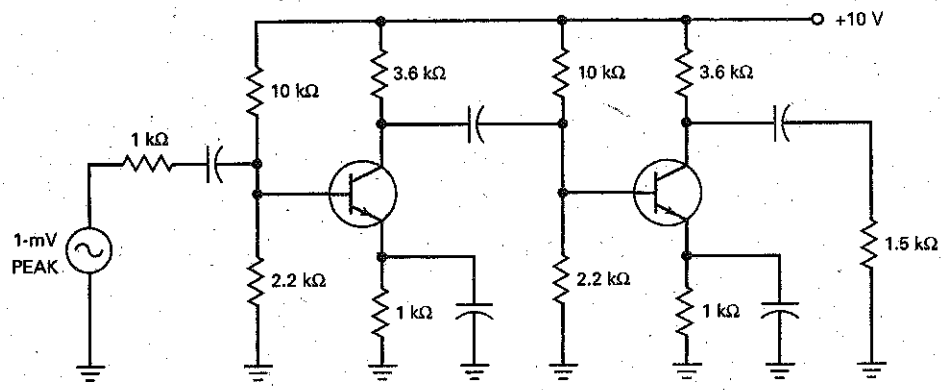

Job Interview Questions

1. Why are coupling and bypass capacitors used?
2. I want you to draw a base-biased amplifier with waveforms. Then, I want you to explain how the circuit amplifies and why the different waveforms have the dc and ac voltage levels you have shown in your drawing.
3. I want you to draw a VDB amplifier with waveforms. Then, explain the different waveforms.
4. Tell me everything you know about the ac resistance of the emitter diode.
5. Explain what *small-signal operation* means. Including drawings in your discussion.
6. Draw the two ac models of a transistor that were discussed in this chapter. Explain how to use them.
7. Why is it important to bias a transistor near the middle of the ac load line?
8. Why are ac models used for transistors, and which are the two most commonly used?
9. Compare and contrast coupling and bypass capacitors.
10. What is the difference between β and β_{dc}?
11. If you have a VDB circuit and the collector resistor opens, what would happen to the ac output voltage?

Self-Test Answers

1.	a	8.	b	15.	d
2.	b	9.	c	16.	b
3.	c	10.	c	17.	c
4.	c	11.	b	18.	b
5.	a	12.	d	19.	b
6.	d	13.	b	20.	c
7.	b	14.	b	21.	a

Practice Problem Answers

9-1 $C = 1\ \mu F$

9-2 $C = 33\ \mu F$

9-3 $i_{e(pp)} = 86.7\ \mu A_{pp}$

9-6 $r'_e = 28.8\ \Omega$

chapter 10

Voltage Amplifiers

This chapter continues the discussion of CE amplifiers and shows you how to calculate the voltage gain and the ac voltages from the circuit values. This is important when troubleshooting because you can measure the ac voltages to see whether they are in reasonable agreement with theoretical values. This chapter also discusses input impedance, multistage amplifiers, and negative feedback. The CC and CB amplifier configurations will be discussed in Chap. 11.

Objectives

After studying this chapter, you should be able to:

- Discuss the important characteristics of the CE amplifier.
- Show how to calculate and predict the voltage gain of a CE amplifier.
- Explain how the swamped amplifier works and list three of its advantages.
- Draw a diagram of a two-stage CE amplifier.
- Describe two capacitor-related problems that can occur in the CE amplifier.
- Troubleshoot CE amplifier circuits.

Chapter Outline

10-1 Voltage Gain

10-2 The Loading Effect of Input Impedance

10-3 Multistage Amplifiers

10-4 Swamped Amplifier

10-5 Two-Stage Feedback

10-6 Troubleshooting

Vocabulary

ac collector resistance
ac emitter feedback
cascading
feedback resistor
multistage amplifier
swamped amplifier
swamping
total voltage gain
two-stage feedback
voltage gain

10-1 Voltage Gain

Figure 10-1*a* shows a voltage-divider-biased (VDB) amplifier. **Voltage gain** was defined as the ac output voltage divided by the ac input voltage. With this definition, we can derive another equation for voltage gain that is useful in troubleshooting.

Derived from the π Model

Figure 10-1*b* shows the ac equivalent circuit using the π model of the transistor. The ac base current i_b flows through the input impedance of the base ($\beta r'_e$). With Ohm's law, we can write:

$$v_{in} = i_b \beta r'_e$$

In the collector circuit, the current source pumps an ac current i_c through the parallel connection of R_C and R_L. Therefore, the ac output voltage equals:

$$v_{out} = i_c(R_C \parallel R_L) = \beta i_b(R_C \parallel R_L)$$

Figure 10-1 (*a*) CE amplifier; (*b*) ac equivalent circuit with π model; (*c*) ac equivalent circuit with T model.

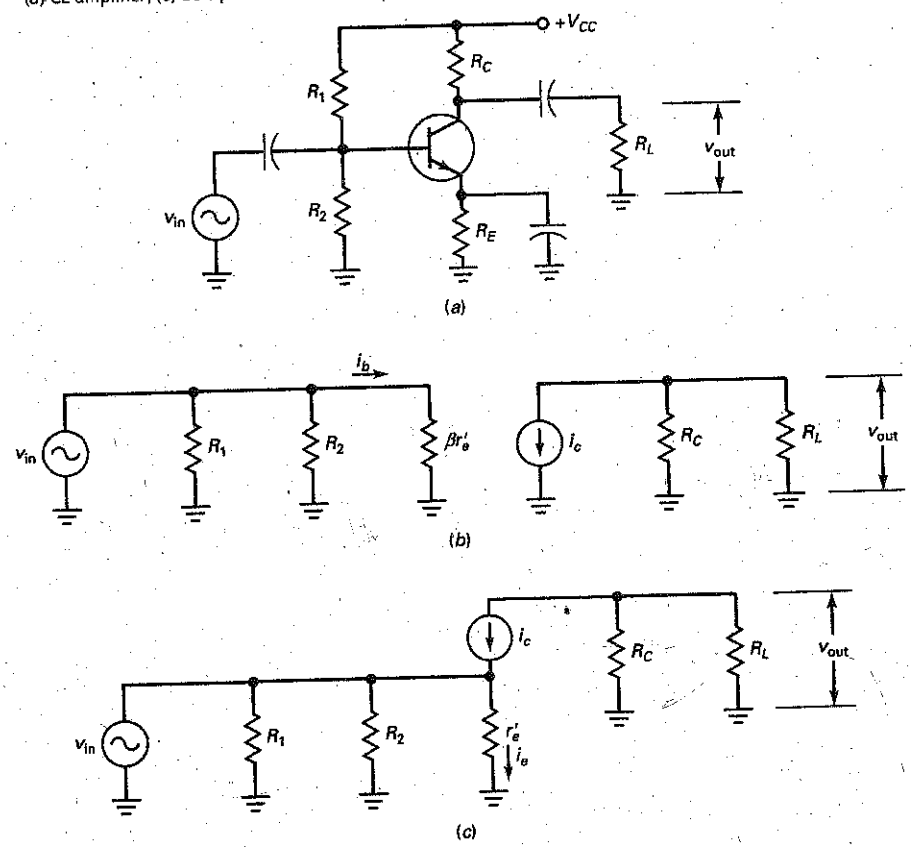

Now, we can divide v_{out} by v_{in} to get:

$$A_V = \frac{v_{out}}{v_{in}} = \frac{\beta i_b (R_C \parallel R_L)}{i_b \beta r'_e}$$

which simplifies to:

$$A_V = \frac{(R_C \parallel R_L)}{r'_e} \tag{10-1}$$

AC Collector Resistance

In Fig. 10-1*b*, the total ac load resistance seen by the collector is the parallel combination of R_C and R_L. This total resistance is called the **ac collector resistance,** symbolized r_c. As a definition:

$$r_c = R_C \parallel R_L \tag{10-2}$$

Now, we can rewrite Eq. (10-1) as:

$$A_V = \frac{r_c}{r'_e} \tag{10-3}$$

In words: The voltage gain equals the ac collector resistance divided by the ac resistance of the emitter diode.

Derived from the T Model

Either transistor model gives the same results. Later, we will use the T model when analyzing differential amplifiers. For practice, let us derive the equation for voltage gain using the T model.

Figure 10-1*c* shows the ac equivalent circuit using the T model of the transistor. The input voltage v_{in} appears across r'_e. With Ohm's law, we can write:

$$v_{in} = i_e r'_e$$

In the collector circuit, the current source pumps an ac current i_c through the ac collector resistance. Therefore, the ac output voltage equals:

$$v_{out} = i_c r_c$$

Now, we can divide v_{out} by v_{in} to get:

$$A_V = \frac{v_{out}}{v_{in}} = \frac{i_c r_c}{i_e r'_e}$$

Since $i_c \approx i_e$, we can simplify the equation to get:

$$A_V = \frac{r_c}{r'_e}$$

This is the same equation derived with the π model. It applies to all CE amplifiers because all have an ac collector resistance of r_c and an emitter diode with an ac resistance of r'_e.

GOOD TO KNOW

The current gain A_i of a common-emitter amplifier equals the ratio of the output current i_{out} to the input current i_{in}. The output current, however, is not i_c, as you might think. The output current i_{out} is the current flowing in the load R_L. The equation for A_i is derived as follows:

$$A_i = \frac{V_{out}/R_L}{V_{in}/Z_{in}}$$

or

$$A_i = V_{out}/V_{in} \times Z_{in}/R_L$$

Since $A_v = V_{out}/V_{in}$, then A_i can be stated as $A_i = A_v \times Z_{in}/R_L$.

Example 10–1

What is the voltage gain in Fig. 10-2*a*? The output voltage across the load resistor?

Figure 10–2 (*a*) Example of VDB amplifier; (*b*) example of TSEB amplifier.

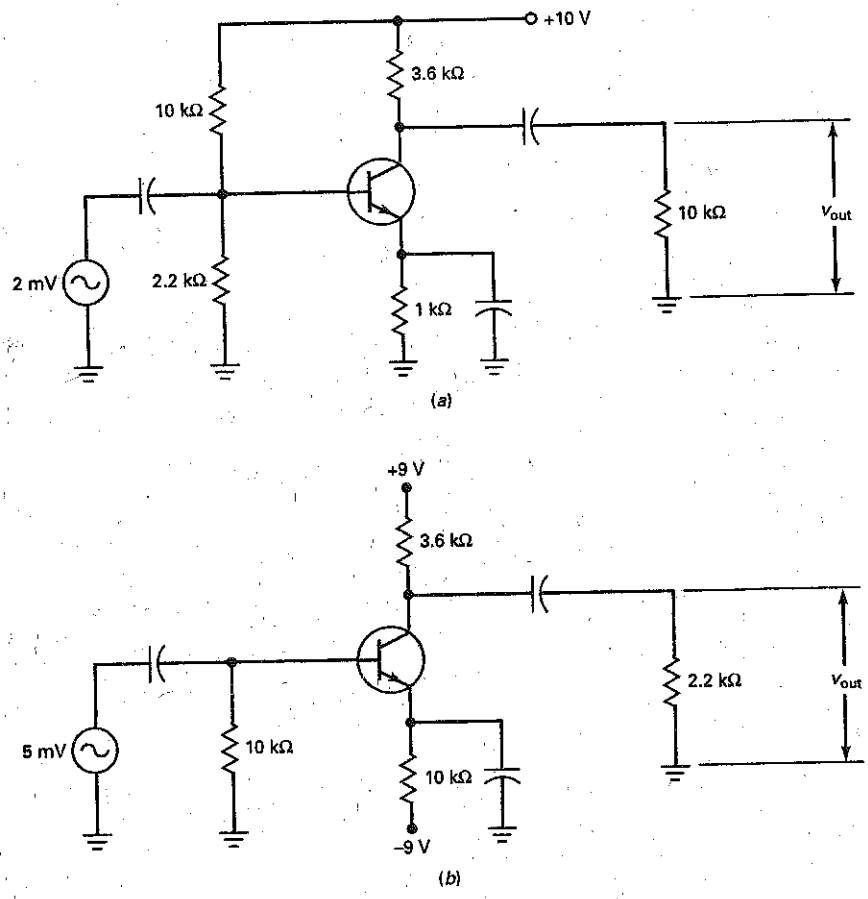

SOLUTION The ac collector resistance is:

$$r_c = R_C \parallel R_L = (3.6\ \text{k}\Omega \parallel 10\ \text{k}\Omega) = 2.65\ \text{k}\Omega$$

In Example 9-2, we calculated an r'_e of 22.7 Ω. So, the voltage gain is:

$$A_V = \frac{r_c}{r'_e} = \frac{2.65\ \text{k}\Omega}{22.7\ \Omega} = 117$$

The output voltage is:

$$v_{out} = A_V v_{in} = (117)(2\ \text{mV}) = 234\ \text{mV}$$

PRACTICE PROBLEM 10–1 Using Fig. 10-2*a*, change R_L to 6.8 kΩ and find A_V.

Example 10-2

What is the voltage gain in Fig. 10-2*b*? The output voltage across the load resistor?

SOLUTION The ac collector resistance is:

$$r_c = R_C \parallel R_L = (3.6\ \text{k}\Omega \parallel 2.2\ \text{k}\Omega) = 1.37\ \text{k}\Omega$$

The dc emitter current is approximately:

$$I_E = \frac{9\ \text{V} - 0.7\ \text{V}}{10\ \text{k}\Omega} = 0.83\ \text{mA}$$

The ac resistance of the emitter diode is:

$$r'_e = \frac{25\ \text{mV}}{0.83\ \text{mA}} = 30\ \Omega$$

The voltage gain is:

$$A_V = \frac{r_c}{r'_e} = \frac{1.37\ \text{k}\Omega}{30\ \Omega} = 45.7$$

The output voltage is:

$$v_{\text{out}} = A_V v_{\text{in}} = (45.7)(5\ \text{mV}) = 228\ \text{mV}$$

PRACTICE PROBLEM 10-2 In Fig. 10-2*b*, change the emitter resistor R_E from 10 kΩ to 8.2 kΩ and calculate the new output voltage, v_{out}.

10-2 The Loading Effect of Input Impedance

Up to now, we have assumed an ideal ac voltage source, one with zero source resistance. In this section, we will discuss how the input impedance of an amplifier can load down the ac source, that is, reduce the ac voltage appearing across the emitter diode.

Input Impedance

In Fig. 10-3*a*, an ac voltage source v_g has an internal resistance of R_G. (The subscript *g* stands for "generator," a synonym for *source*.) When the ac generator is not stiff, some of the ac source voltage is dropped across its internal resistance. As a result, the ac voltage between the base and ground is less than ideal.

The ac generator has to drive the input impedance of the stage $z_{\text{in(stage)}}$. This input impedance includes the effects of the biasing resistors R_1 and R_2, in parallel with the input impedance of the base $z_{\text{in(base)}}$. Figure 10-3*b* illustrates the idea. The input impedance of the stage equals:

$$z_{\text{in(stage)}} = R_1 \parallel R_2 \parallel \beta r'_e$$

Figure 10-3 CE amplifier. (*a*) Circuit; (*b*) ac equivalent circuit; (*c*) effect of input impedance.

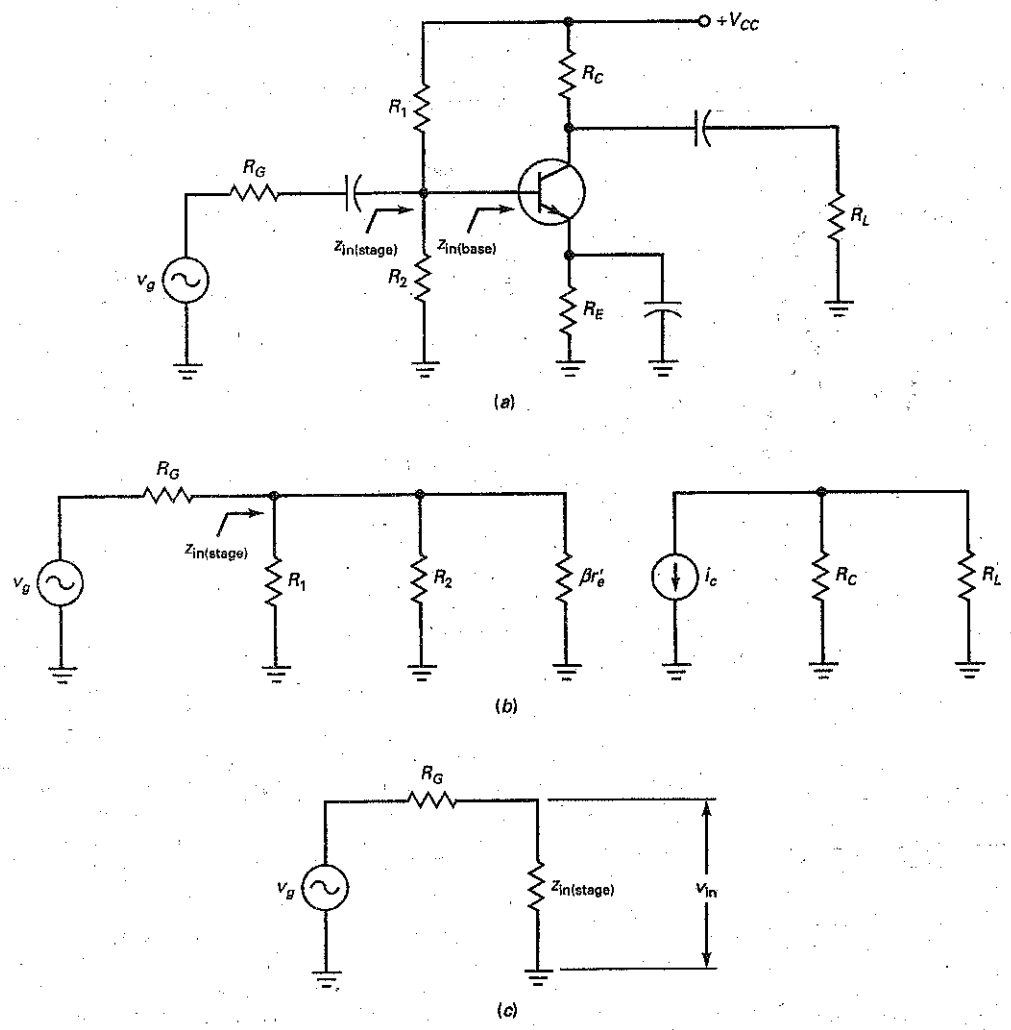

Equation for Input Voltage

When the generator is not stiff, the ac input voltage v_{in} of Fig. 10-3*c* is less than v_g. With the voltage-divider theorem, we can write:

$$v_{in} = \frac{z_{in(stage)}}{R_G + z_{in(stage)}} v_g \tag{10-4}$$

This equation is valid for any amplifier. After you calculate or estimate the input impedance of the stage, you can determine what the input voltage is. Note: The generator is stiff when R_G is less than $0.01 z_{in(stage)}$.

Example 10–3

In Fig. 10-4, the ac generator has an internal resistance of 600 Ω. What is the output voltage in Fig. 10-4 if $\beta = 300$?

Figure 10–4 Example.

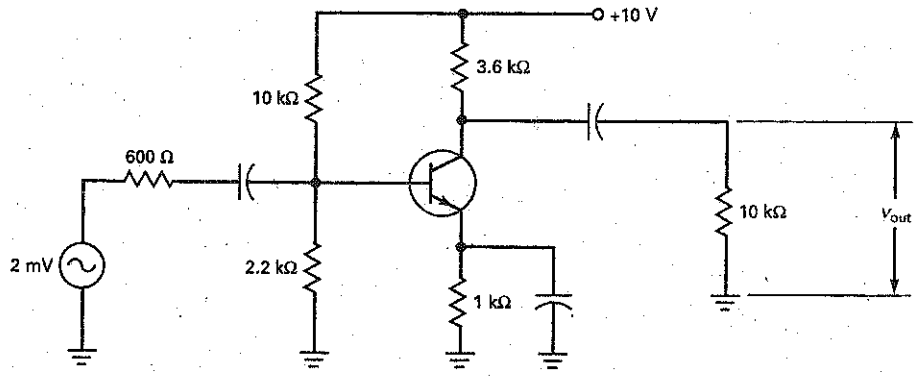

SOLUTION Here are two quantities calculated in earlier examples: $r'_e = 22.7\ \Omega$ and $A_V = 117$. We will use these values in solving the problem.

When $\beta = 300$, the input impedance of the base is:

$$z_{in(base)} = (300)(22.7\ \Omega) = 6.8\ k\Omega$$

The input impedance of the stage is:

$$z_{in(stage)} = 10\ k\Omega \parallel 2.2\ k\Omega \parallel 6.8\ k\Omega = 1.42\ k\Omega$$

With Eq. (10-4), we can calculate the input voltage:

$$v_{in} = \frac{1.42\ k\Omega}{600\ \Omega + 1.42\ k\Omega} 2\ mV = 1.41\ mV$$

This is the ac voltage that appears at the base of the transistor, equivalent to the ac voltage across the emitter diode. The amplified output voltage equals:

$$v_{out} = A_V v_{in} = (117)(1.41\ mV) = 165\ mV$$

PRACTICE PROBLEM 10–3 Change the R_G value of Fig. 10-4 to 50 Ω and solve for the new amplified output voltage.

Example 10–4

Repeat the preceding example for $\beta = 50$.

SOLUTION When $\beta = 50$, the input impedance of the base decreases to:

$$z_{in(base)} = (50)(22.7\ \Omega) = 1.14\ k\Omega$$

The input impedance of the stage decreases to:

$$z_{in(stage)} = 10\ k\Omega \parallel 2.2\ k\Omega \parallel 1.14\ k\Omega = 698\ \Omega$$

With Eq. (10-4), we can calculate the input voltage:

$$v_{in} = \frac{698\ \Omega}{600\ \Omega + 698\ \Omega} 2\ mV = 1.08\ mV$$

The output voltage equals:

$$v_{out} = A_v v_{in} = (117)(1.08\ \text{mV}) = 126\ \text{mV}$$

This example illustrates how the ac current gain of the transistor can change the output voltage. When β decreases, the input impedance of the base decreases, the input impedance of the stage decreases, the input voltage decreases, and the output voltage decreases.

PRACTICE PROBLEM 10-4 Using Fig. 10-4, change the β value to 400 and calculate the output voltage.

10-3 Multistage Amplifiers

To get more voltage gain, we can create a **multistage amplifier** by **cascading** two or more amplifier stages. This means using the output of the first stage as the input to a second stage. In turn, the output of the second stage can be used as the input to the third stage, and so on.

Voltage Gain of First Stage

Figure 10-5*a* shows a two-stage amplifier. The amplified and inverted signal out of the first stage is coupled to the base of the second stage. The amplified and inverted output of the second stage is then coupled to the load resistance. The

Figure 10-5 (*a*) Two-stage amplifier; (*b*) ac equivalent circuit.

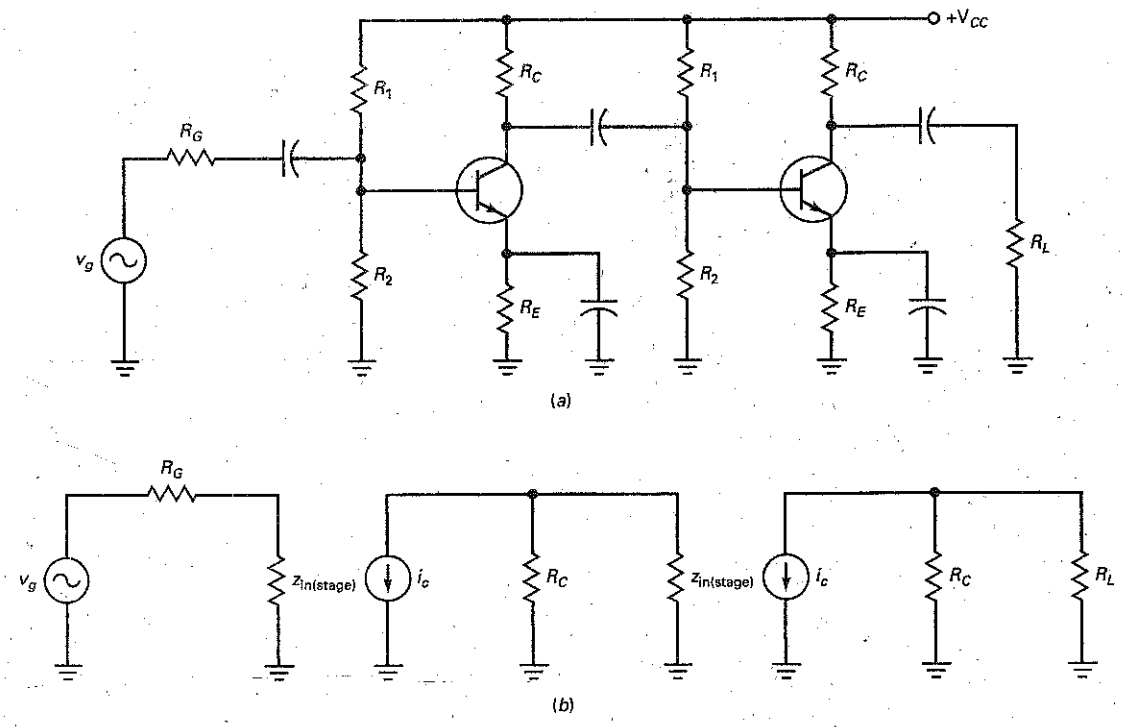

signal across the load resistance is in phase with the generator signal. The reason is that each stage inverts the signal by 180°. Therefore, two stages invert the signal by 360°, equivalent to 0° (in phase).

Voltage Gain of First Stage

Fig. 10-5*b* shows the ac equivalent circuit. Note that the input impedance of the second stage loads down the first stage. In other words, the z_{in} of the second stage is in parallel with the R_C of the first stage. The ac collector resistance of the first stage is

$$\text{First stage:} \quad r_c = R_C \parallel z_{in(stage)}$$

The voltage gain of the first stage is:

$$A_{V_1} = \frac{R_C \parallel z_{in(stage)}}{r'_e}$$

Voltage Gain of Second Stage

The ac collector resistance of the second stage is:

$$\text{Second stage:} \quad r_c = R_C \parallel R_L$$

and the voltage gain is:

$$A_{V_2} = \frac{R_C \parallel R_L}{r'_e}$$

Total Voltage Gain

The **total voltage gain** of the amplifier is given by the product of the individual gains:

$$A_V = (A_{V_1})(A_{V_2}) \tag{10-5}$$

For instance, if each stage has a voltage gain of 50, the overall voltage gain is 2500.

Example 10-5

What is the ac collector voltage in the first stage of Fig. 10-6? The ac output voltage across the load resistor?

Figure 10-6 Example.

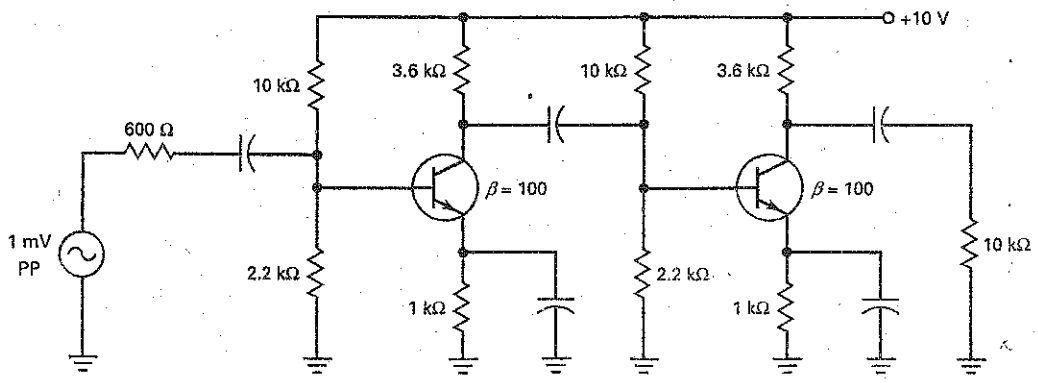

SOLUTION The input impedance of the first base is:

$$z_{in(base)} = (100)(22.7\ \Omega) = 2.27\ k\Omega$$

The input impedance of the first stage is:

$$z_{in(stage)} = 10\ k\Omega \parallel 2.2\ k\Omega \parallel 2.27\ k\Omega = 1\ k\Omega$$

The input signal to the first base is:

$$v_{in} = \frac{1\ k\Omega}{600\ \Omega + 1\ k\Omega}\ 1\ mV = 0.625\ mV$$

The input impedance of the second base is the same as the first stage:

$$z_{in(stage)} = 10\ k\Omega \parallel 2.2\ k\Omega \parallel 2.27\ k\Omega = 1\ k\Omega$$

This input impedance is the load resistance on the first stage. In other words, the ac collector resistance of the first stage is:

$$r_c = 3.6\ k\Omega \parallel 1\ k\Omega = 783\ \Omega$$

The voltage gain of the first stage is:

$$A_{V_1} = \frac{783\ \Omega}{22.7\ \Omega} = 34.5$$

Therefore, the ac collector voltage in the first stage is:

$$v_c = A_{V_1} v_{in} = (34.5)(0.625\ mV) = 21.6\ mV$$

The ac collector resistance of the second stage is:

$$r_c = 3.6\ k\Omega \parallel 10\ k\Omega = 2.65\ k\Omega$$

and the voltage gain is:

$$A_{V_2} = \frac{2.65\ k\Omega}{22.7\ \Omega} = 117$$

Therefore, the ac output voltage across the load resistor is:

$$v_{out} = A_{V_2} v_{b_2} = (117)(21.6\ mV) = 2.52\ V$$

Another way to calculate the final output voltage is by using the overall voltage gain:

$$A_V = (34.5)(117) = 4037$$

The ac output voltage across the load resistor is:

$$v_{out} = A_V v_{in} = (4037)(0.625\ mV) = 2.52\ V$$

PRACTICE PROBLEM 10-5 In Fig. 10-6, change the load resistance of stage two from 10 kΩ to 6.8 kΩ and calculate the final output voltage.

10-4 Swamped Amplifier

The voltage gain of a CE amplifier changes with the quiescent current, temperature variations, and transistor replacement because these quantities change r'_e and β.

AC Emitter Feedback

One way to stabilize the voltage gain is to leave some of the emitter resistance unbypassed, as shown in Fig. 10-7*a*, producing **ac emitter feedback.** When ac

Figure 10-7 (*a*) Swamped amplifier; (*b*) ac equivalent circuit.

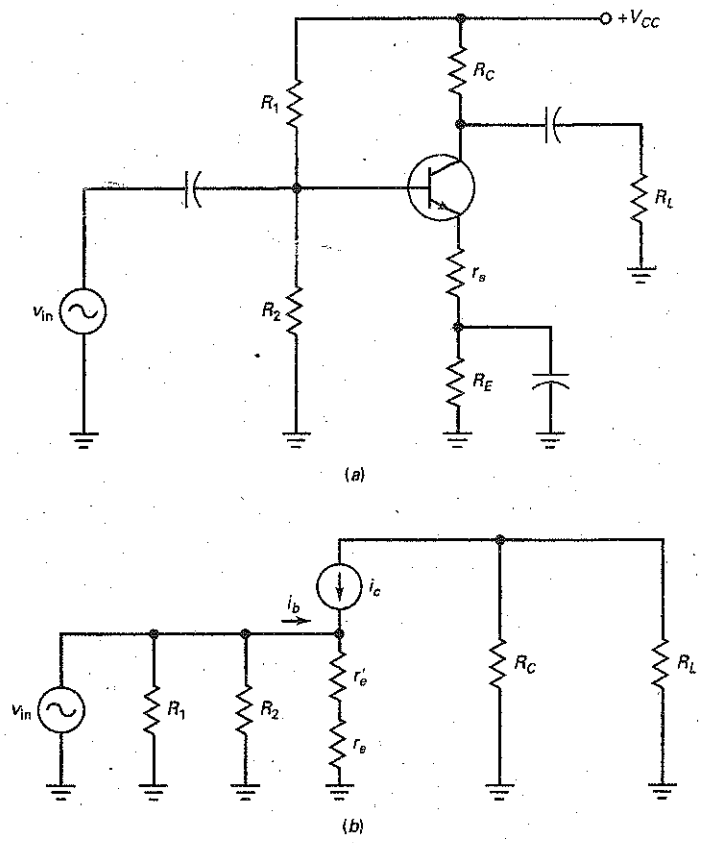

emitter current flows through the unbypassed emitter resistance r_e, an ac voltage appears across r_e. This produces *negative feedback* (described in Chap. 8). The ac voltage across r_e opposes changes in voltage gain. The unbypassed resistance r_e is called a **feedback resistor** because it has an ac voltage across it that opposes changes in voltage gain.

For instance, suppose the ac collector current increases because of a temperature increase. This will produce a larger output voltage, but it will also produce a larger ac voltage across r_e. Since v_{be} equals the difference between v_{in} and v_e, the increase in v_e will decrease v_{be}. This decreases the ac collector current. Since this opposes the original increase in ac collector current, we have negative feedback.

Voltage Gain

Figure 10-7*b* shows the ac equivalent circuit with the T model of the transistor. Clearly, the ac emitter current must flow through r'_e and r_e. With Ohm's law, we can write:

$$v_{in} = i_e(r_e + r'_e) = v_b$$

In the collector circuit, the current source pumps an ac current i_c through the ac collector resistance. Therefore, the ac output voltage equals:

$$v_{out} = i_c r_c$$

Now, we can divide v_{out} by v_{in} to get:

$$A_V = \frac{v_{out}}{v_{in}} = \frac{i_c r_c}{i_e(r_e + r'_e)} = \frac{v_c}{v_b}$$

Since $i_c \approx i_e$, we can simplify the equation to get:

$$A_V = \frac{r_c}{r_e + r'_e} \tag{10-6}$$

When r_e is much greater than r'_e, the foregoing equation simplifies to:

$$A_V = \frac{r_c}{r_e} \tag{10-7}$$

This says that the voltage gain equals the ac collector resistance divided by the feedback resistance. Since r'_e no longer appears in the equation for voltage gain, it no longer has an effect on the voltage gain.

The foregoing is an example of **swamping,** making one quantity much larger than a second quantity to eliminate changes in the second. In Eq. (10-6), a large value of r_e swamps out the variations in r'_e. The result is a stable voltage gain, one that does not change with temperature variation or transistor replacement.

Input Impedance of the Base

The negative feedback not only stabilizes the voltage gain, it also increases the input impedance of the base. In Fig. 10-7*b*, the input impedance of the base is:

$$z_{in(base)} = \frac{v_{in}}{i_b}$$

Applying Ohm's law to the emitter diode of Fig. 10-7*b*, we can write:

$$v_{in} = i_e(r_e + r'_e)$$

Substitute this equation into the preceding one to get:

$$z_{in(base)} = \frac{v_{in}}{i_b} = \frac{i_e(r_e + r'_e)}{i_b}$$

Since $i_e \approx i_c$, the foregoing equation becomes:

$$z_{in(base)} = \beta(r_e + r'_e) \tag{10-8}$$

In a **swamped amplifier,** this simplifies to:

$$z_{in(base)} = \beta r_e \tag{10-9}$$

This says that the input impedance of the base equals the current gain times the feedback resistance.

Less Distortion with Large Signals

The nonlinearity of the emitter-diode curve is the source of large-signal distortion. By swamping the emitter diode, we reduce the effect it has on voltage gain. In turn, this reduces the distortion that occurs for large-signal operation.

Put it this way: Without the feedback resistor, the voltage gain is:

$$A_V = \frac{r_c}{r'_e}$$

Since r'_e is current-sensitive, its value changes when a large signal is present. This means that the voltage gain changes during the cycle of a large signal. In other words, changes in r'_e are the cause of distortion with large signals.

With the feedback resistor, however, the swamped voltage gain is:

$$A_V = \frac{r_c}{r_e}$$

Since r'_e is no longer present, the distortion of large signals has been eliminated. A swamped amplifier therefore has three advantages: It stabilizes voltage gain, increases the input impedance of the base, and reduces the distortion of large signals.

Example 10-6

MultiSim

What is the output voltage across the load resistor of MultiSim Fig. 10-8 if $\beta = 200$? Ignore r'_e in the calculations.

MultiSim **Figure 10-8** Single-stage example.

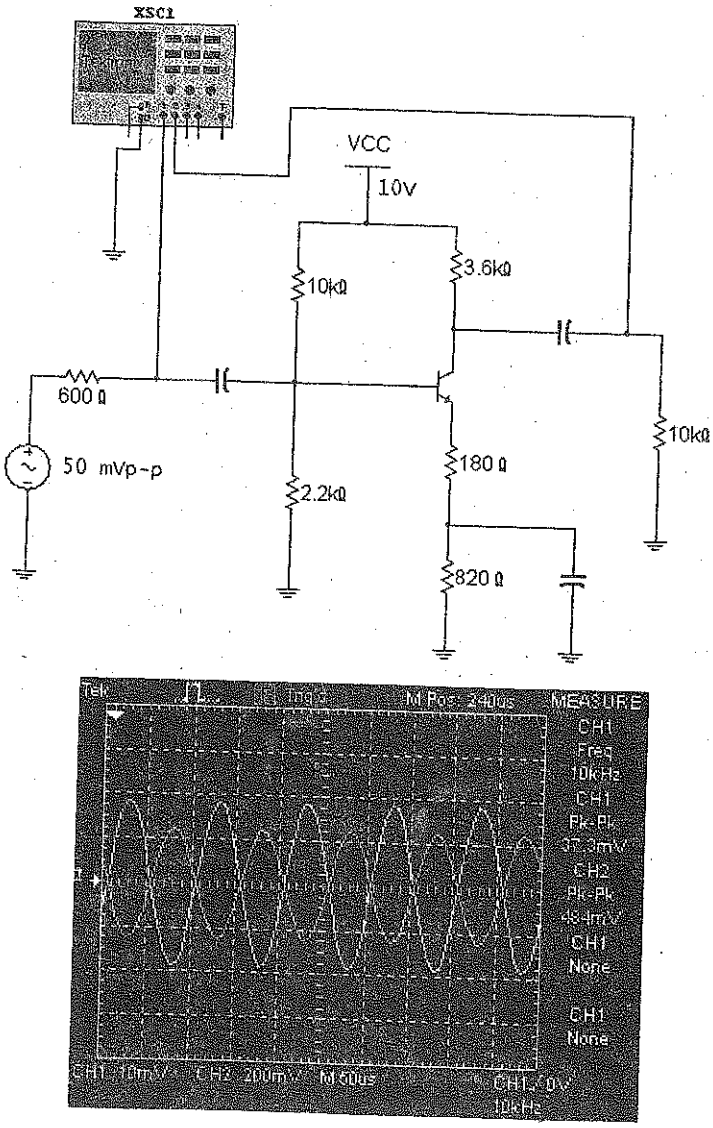

SOLUTION The input impedance of the base is:

$$z_{in(base)} = \beta r_e = (200)(180\ \Omega) = 36\ k\Omega$$

The input impedance of the stage is:

$$z_{in(stage)} = 10\ k\Omega \parallel 2.2\ k\Omega \parallel 36\ k\Omega = 1.71\ k\Omega$$

The ac input voltage to the base is:

$$v_{in} = \frac{1.71\ k\Omega}{600\ \Omega + 1.71\ k\Omega} 50\ mV = 37\ mV$$

The voltage gain is:

$$A_V = \frac{r_c}{r_e} = \frac{2.65\ k\Omega}{180\ \Omega} = 14.7$$

The output voltage is:

$$v_{out} = (14.7)(37\ mV) = 544\ mV$$

PRACTICE PROBLEM 10-6 Using Fig. 10-8, change the β value to 300 and solve for the output voltage across the 10 kΩ load.

Example 10-7

Repeat the preceding example, but this time include r'_e in the calculations.

SOLUTION The input impedance of the base is:

$$z_{in(base)} = \beta(r_e + r'_e) = (200)(180\ \Omega + 22.7\ \Omega) = 40.5\ k\Omega$$

The input impedance of the stage is:

$$z_{in(stage)} = 10\ k\Omega \parallel 2.2\ k\Omega \parallel 40.5\ k\Omega = 1.72\ k\Omega$$

The ac input voltage to the base is:

$$v_{in} = \frac{1.72\ k\Omega}{600\ \Omega + 1.72\ k\Omega} 50\ mV = 37\ mV$$

The voltage gain is:

$$A_V = \frac{r_c}{r_e + r'_e} = \frac{2.65\ k\Omega}{180\ \Omega + 22.7\ \Omega} = 13.1$$

The output voltage is:

$$v_{out} = (13.1)(37\ mV) = 485\ mV$$

Comparing the results with and without r'_e in the calculations, we can see that it has little effect on the final answer. This is to be expected in a swamped amplifier. When you are troubleshooting, you can assume that the amplifier is swamped when a feedback resistor is used in the emitter. If you need more accuracy, you can include r'_e.

PRACTICE PROBLEM 10-7 Compare the calculated v_{out} value to the measured value using MultiSim.

Example 10-8

What is the output voltage in Fig. 10-9 if $\beta = 200$? Ignore r'_e in the calculations.

SOLUTION In Example 10-6, we calculated $z_{in(base)} = 36\ k\Omega$ and $z_{in(stage)} = 1.71\ k\Omega$. The first stage has these values because its circuit values are the same as those of Example 10-6. The ac input voltage to the first base is:

$$v_{in} = \frac{1.71\ k\Omega}{600\ \Omega + 1.71\ k\Omega} 1\ mV = 0.74\ mV$$

The input impedance of the second stage is the same as the first stage: $z_{in(stage)} = 1.71\ k\Omega$. Therefore, the ac collector resistance of the first stage is:

$$r_c = 3.6\ k\Omega \parallel 1.71\ k\Omega = 1.16\ k\Omega$$

and the voltage gain of the first stage is:

$$A_{V_1} = \frac{1.16\ k\Omega}{180\ \Omega} = 6.44$$

The amplified and inverted ac voltage at the first collector and the second base is:

$$v_c = (6.44)(0.74\ mV) = 4.77\ mV$$

The second stage has an ac collector resistance of 2.65 kΩ, calculated in Example 10-6. Therefore, it has a voltage gain of:

$$A_{V_2} = \frac{2.65\ k\Omega}{180\ \Omega} = 14.7$$

The final output voltage equals:

$$v_{out} = (14.7)(4.77\ mV) = 70\ mV$$

Another way to calculate the output voltage is to use the overall voltage gain:

$$A_V = (A_{V_1})(A_{V_2}) = (6.44)(14.7) = 95$$

Then:

$$v_{out} = A_V v_{in} = (95)(0.74\ mV) = 70\ mV$$

Figure 10-9 Two-stage amplifier example.

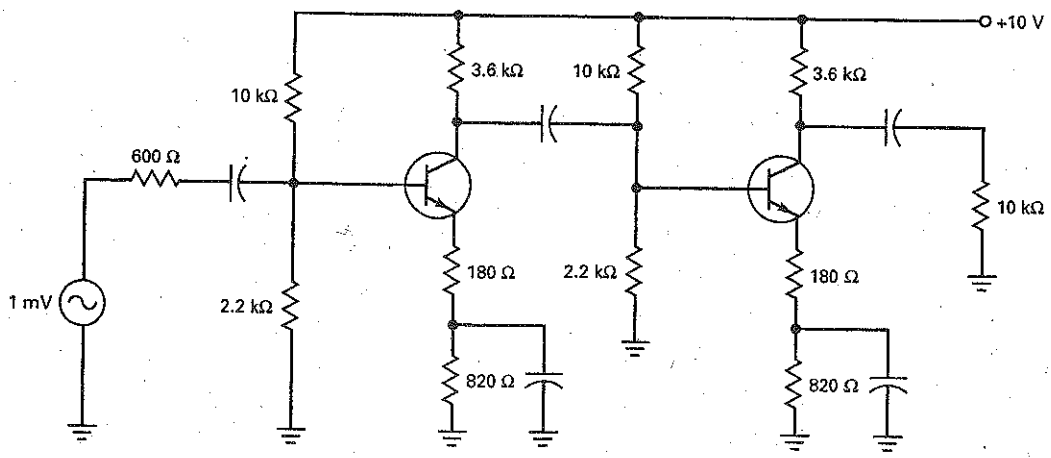

10-5 Two-Stage Feedback

A swamped amplifier is an example of single-stage feedback. It works reasonably well to stabilize the voltage gain, increase the input impedance, and reduce distortion. **Two-stage feedback** works even better.

Basic Idea

Figure 10-10 shows a two-stage feedback amplifier. The first stage has an unbypassed emitter resistance of r_e. The second stage is a CE stage, with the emitter at ac ground to produce maximum gain in this stage. The output signal is coupled back through a feedback resistance r_f to the first emitter. Because of the voltage divider, the ac voltage between the first emitter and ground is:

$$v_e = \frac{r_e}{r_f + r_e} v_{out}$$

Here is the basic idea of how the two-stage feedback works: Assume that an increase in temperature causes the output voltage to increase. Since part of the output voltage is fed back to the first emitter, v_e increases. This decreases v_{be} in the first stage, decreases v_c in the first stage, and decreases v_{out}. On the other hand, if the output voltage tries to decrease, v_{be} increases and v_{out} increases.

In either case, any attempted change in the output voltage is fed back and the amplified change opposes the original change. The overall effect is that the output voltage will change by a much smaller amount than it would without the negative feedback.

Voltage Gain

In a well-designed two-stage feedback amplifier, the voltage gain is given by this derivation:

$$A_V = \frac{r_f}{r_e} + 1 \tag{10-10}$$

Figure 10-10 Two-stage feedback amplifier.

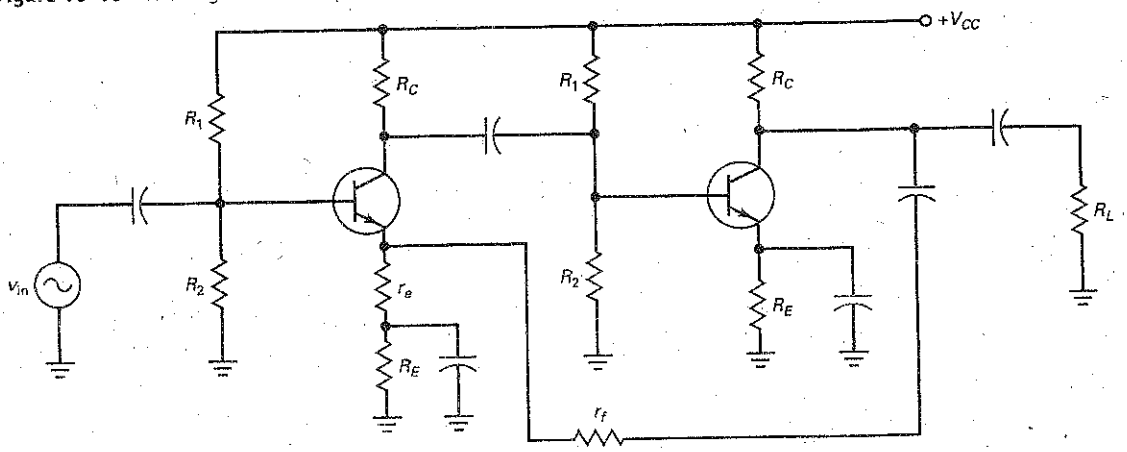

In most designs, the first term in this equation is much greater than 1, so the equation simplifies to:

$$A_V = \frac{r_f}{r_e}$$

When we discuss op amps, we will analyze negative feedback in detail. At that time, you will see what is meant by a *well-designed feedback amplifier.*

What's important about Eq. (10-10) is this: The voltage gain depends only on external resistances r_f and r_e. Since these resistances are fixed in value, the voltage gain is fixed.

Example 10-9

A variable resistor is used in Fig. 10-11. It can be varied from 0 to 10 kΩ. What is the minimum voltage gain of the two-stage amplifier? The maximum?

Figure 10-11 Example of two-stage feedback.

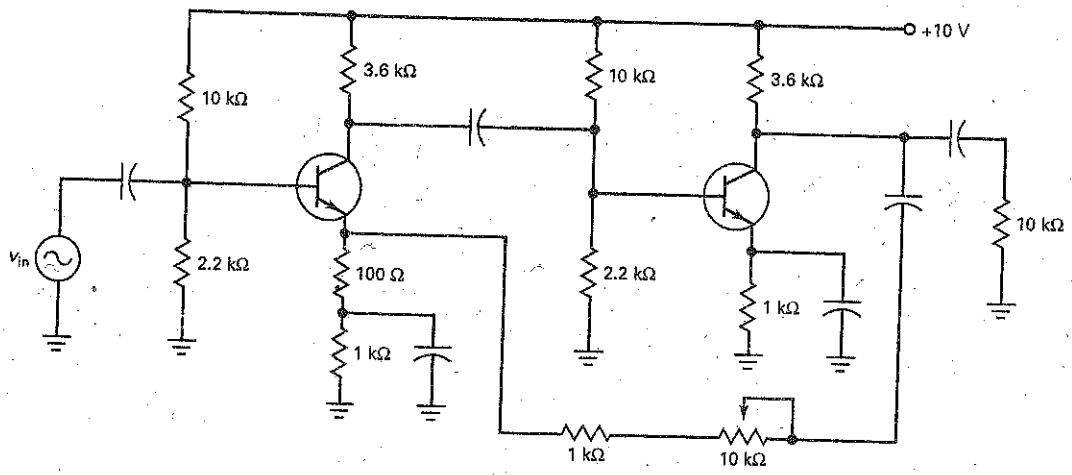

SOLUTION The feedback resistance r_f is the sum of 1 kΩ and the adjustable resistance. The minimum voltage gain occurs when the variable resistor is zeroed:

$$A_V = \frac{r_f}{r_e} = \frac{1\ \text{k}\Omega}{100\ \Omega} = 10$$

The maximum voltage gain when the variable resistance is 10 kΩ is:

$$A_V = \frac{r_f}{r_e} = \frac{11\ \text{k}\Omega}{100\ \Omega} = 110$$

PRACTICE PROBLEM 10-9 In Fig. 10-11, what value of resistance would the variable resistor need to be for a voltage gain of 50?

Example 10-10

How could the circuit of Fig. 10-11 be modified to be used as a portable microphone preamplifier?

SOLUTION The 10 V dc power supply could be replaced with a 9 V battery and on/off switch. Connect a properly sized microphone jack to the preamplifier's input coupling capacitor and ground. The microphone should ideally be a low-impedance dynamic style. If an electret microphone is used, it will be necessary to power it from the 9 V battery through a series resistor. For good low-frequency response, the coupling and bypass capacitors need to have low capacitive reactance. A value of 47 μF for each coupling capacitor and 100 μF for each bypass capacitor can be used. The 10 kΩ output load can be changed to a 10 kΩ potentiometer to vary the output level. If more voltage gain is needed, change the 10 kΩ feedback potentiometer to a higher value. The output should be able to drive the line/CD/aux/tape inputs of a home stereo amplifier. Check your system's specifications for the proper input needed. Placing all components in a small metal box and using shielded cables will reduce external noise and interference.

10-6 Troubleshooting

When a single- or double-stage amplifier is not working, a troubleshooter can start by measuring dc voltages, including the dc power supply voltages. These voltages are estimated mentally as discussed earlier, and then the voltages are measured to see whether they are approximately correct. If the dc voltages are distinctly different from the estimated voltages, the possible troubles include open resistors (burned out), shorted resistors (solder bridges across them), incorrect wiring, shorted capacitors, and transistor failures. A short across a coupling or bypass capacitor will change the dc equivalent circuit, which means radically different dc voltages.

If all dc voltages measure OK, the troubleshooting is continued by considering what can go wrong in the ac equivalent circuit. If there is generator voltage but there is no ac base voltage, something may be open between the generator and the base. Perhaps a connecting wire is not in place, or maybe the input coupling capacitor is open. Similarly, if there is no final output voltage but there is an ac collector voltage, the output coupling capacitor may be open, or a connection may be missing.

Normally, there is no ac voltage between the emitter and ground when the emitter is at ac ground. When an amplifier is not working properly, one of the things a troubleshooter checks with an oscilloscope is the emitter voltage. If there is any ac voltage at a bypass emitter, it means that the bypass capacitor is not working.

For instance, an open bypass capacitor means that the emitter is no longer at ac ground. Because of this, the ac emitter current flows through R_E instead of through the bypass capacitor. This produces an ac emitter voltage which you can see with an oscilloscope. So, if you see an ac emitter voltage comparable in size to the ac base voltage, check the emitter-bypass capacitor. It may be defective or not properly connected.

Under normal conditions, the supply line is an ac ground point because of the filter capacitor in the power supply. If the filter capacitor is defective, the ripple becomes huge. This unwanted ripple gets to the base through the voltage divider. Then it is amplified the same as the generator signal. This amplified ripple will produce a hum of 60 or 120 Hz when the amplifier is connected to a loudspeaker. So, if you ever hear excessive hum coming out of a loudspeaker, one of the prime suspects is an open filter capacitor in the power supply.

When the amplifier consists of more than one or two stages, it is best to isolate the defective stage first by using signal tracing or signal injection techniques. As an example, if the amplifier consists of four stages, split the amplifier in half by either measuring or injecting a signal at the output of the second stage. By doing this, you should be able to determine if the trouble is before or after this circuit point. Depending on the result of the first step, move your next troubleshooting point to the midpoint of the defective half. This split-half method of troubleshooting can quickly isolate a defective stage.

Example 10-11

The CE amplifier of Fig. 10-12 has an ac load voltage of zero. If the dc collector voltage is 6 V and the ac collector voltage is 70 mV, what is the trouble?

SOLUTION Since the dc and ac collector voltages are normal, there are only two components that can be the trouble: C_2 or R_L. If you ask four what-if questions about these components, you can find the trouble. The four what-ifs are:

What if C_2 is shorted?
What if C_2 is open?
What if R_L is shorted?
What if R_L is open?

The answers are:

A shorted C_2 decreases the dc collector voltage significantly.
An open C_2 breaks the ac path but does not change the dc or ac collector voltages.
A shorted R_L kills the ac collector voltage.
An open R_L increases the ac collector voltage significantly.

Figure 10-12 Troubleshooting example.

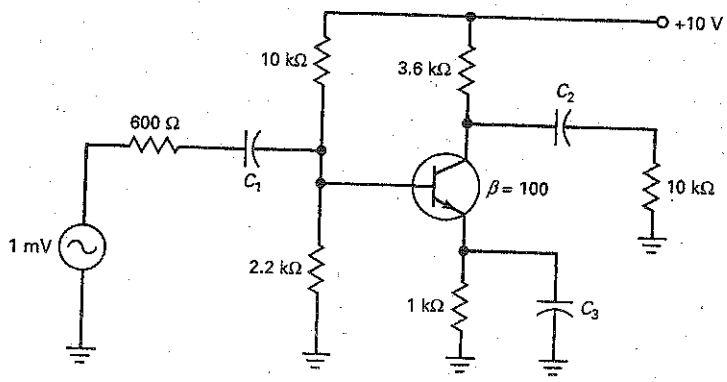

The trouble is an open C_2. When you first learn how to troubleshoot, you may have to ask yourself what-if questions to isolate the trouble. After you gain experience, the whole process becomes automatic. An experienced troubleshooter would have found this trouble almost instantly.

Example 10-12

The CE amplifier of Fig. 10-12 has an ac emitter voltage of 0.75 mV and an ac collector voltage of 2 mV. What is the trouble?

SOLUTION Because troubleshooting is an art, you have to ask what-if questions that make sense to *you* and in any order that helps you to find the trouble. If you haven't figured out this trouble yet, start to ask what-if questions about each component and see whether you can find the trouble. Then read what comes next.

No matter which component you select, your what-if questions will not produce the symptoms given here until you start asking *these* what-if questions:

What if C_3 is shorted?
What if C_3 is open?

A shorted C_3 cannot produce the symptoms, but an open C_3 does. Why? Because with an open C_3, the input impedance of the base is much higher and the ac base voltage increases from 0.625 to 0.75 mV. Since the emitter is no longer ac grounded, almost all this 0.75 mV appears at the emitter. Since the amplifier has a swamped voltage gain of 2.65, the ac collector voltage is approximately 2 mV.

PRACTICE PROBLEM 10-12 In the CE amplifier of Fig. 10-12, what would happen to the dc and ac transistor voltages if the transistor's BE diode opened?

Summary

SEC. 10-1 VOLTAGE GAIN

The voltage gain of a CE amplifier equals the ac collector resistance divided by the ac resistance of the emitter diode.

SEC. 10-2 THE LOADING EFFECT OF INPUT IMPEDANCE

The input impedance of the stage includes the biasing resistors and the input impedance of the base. When the source is not stiff compared to this input impedance, the input voltage is less than the source voltage.

SEC. 10-3 MULTISTAGE AMPLIFIERS

The overall voltage gain equals the product of the individual voltage gains. The input impedance of the second stage is the load resistance on the first stage. Two CE stages produce an amplified in-phase signal.

SEC. 10-4 SWAMPED AMPLIFIER

By leaving some of the emitter resistance unbypassed, we get negative feedback. This stabilizes the voltage gain, increases the input impedance, and reduces large-signal distortion.

SEC. 10-5 TWO-STAGE FEEDBACK

We can feed back the output voltage of the second collector to the first emitter through a voltage divider. This produces negative feedback, which stabilizes the voltage gain of the two-stage amplifier.

SEC. 10-6 TROUBLESHOOTING

With single- or double-stage amplifiers, start with dc measurements. If they do not isolate the trouble, you continue with ac measurements until you have found the trouble.

Definition

(10-2) AC collector resistance:

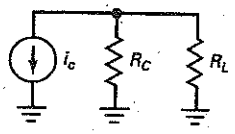

$$r_c = R_C \| R_L$$

Derivations

(10-3) CE voltage gain:

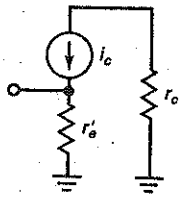

$$A_V = \frac{r_c}{r'_e}$$

(10-4) Loading effect:

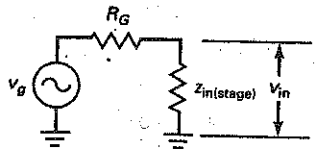

$$v_{in} = \frac{z_{in(stage)}}{R_G + z_{in(stage)}} v_g$$

(10-5) Two-stage voltage gain:

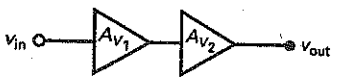

$$A_V = (A_{V_1})(A_{V_2})$$

(10-6) Single-stage feedback:

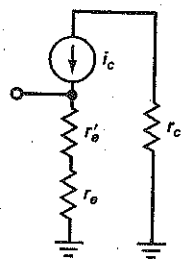

$$A_V = \frac{r_c}{r_e + r'_e}$$

(10-7) Swamped amplifier:

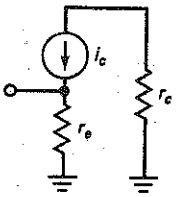

$$A_V = \frac{r_c}{r_e}$$

(10-8) Input impedance:

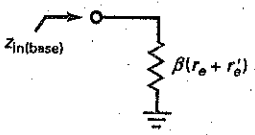

$$z_{in(base)} = \beta(r_e + r'_e)$$

(10-9) Swamped input impedance:

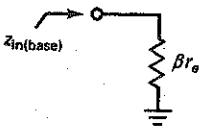

$$z_{in(base)} = \beta r_e$$

(10-10) Two-stage feedback gain:

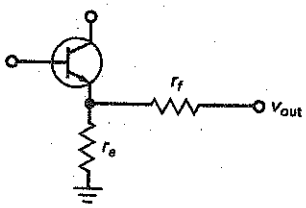

$$A_V = \frac{r_f}{r_e} + 1$$

Student Assignments

1. **The emitter is at ac ground in a**
   a. CB stage c. CE stage
   b. CC stage d. None of these

2. **The output voltage of an emitter-bypassed CE stage is usually**
   a. Constant
   b. Dependent on r'_e
   c. Small
   d. Less than one

3. **The voltage gain equals the output voltage divided by the**
   a. Input voltage
   b. AC emitter resistance
   c. AC collector resistance
   d. Generator voltage

4. **The input impedance of the base decreases when**
   a. β increases
   b. Supply voltage increases
   c. β decreases
   d. AC collector resistance increases

5. **Voltage gain is directly proportional to**
   a. β
   b. r'_e
   c. DC collector voltage
   d. AC collector resistance

6. **Compared to the ac resistance of the emitter diode, the feedback resistance of a swamped amplifier should be**
   a. Small c. Large
   b. Equal d. Zero

7. **Compared to a CE stage, a swamped amplifier has an input impedance that is**
   a. Smaller c. Larger
   b. Equal d. Zero

8. **To reduce the distortion of an amplified signal, you can increase the**
   a. Collector resistance
   b. Emitter feedback resistance
   c. Generator resistance
   d. Load resistance

9. **The emitter of a swamped amplifier**
   a. Is grounded
   b. Has no dc voltage
   c. Has an ac voltage
   d. Has no ac voltage

10. **A swamped amplifier uses**
    a. Base bias
    b. Positive feedback
    c. Negative feedback
    d. A grounded emitter

11. **In a swamped amplifier, the effects of the emitter diode become**
    a. Important to voltage gain
    b. Critical to input impedance
    c. Significant to the analysis
    d. Unimportant

12. **The feedback resistor**
    a. Increases voltage gain
    b. Reduces distortion
    c. Decreases collector resistance
    d. Decreases input impedance

13. **The feedback resistor**
    a. Stabilizes voltage gain
    b. Increases distortion
    c. Increases collector resistance
    d. Decreases input impedance

14. **The ac collector resistance of the first stage includes the**
    a. Load resistance
    b. Input impedance of first stage
    c. Emitter resistance of first stage
    d. Input impedance of second stage

15. **If the emitter-bypass capacitor opens, the ac output voltage will**
    a. Decrease c. Remain the same
    b. Increase d. Equal zero

16. **If the emitter-bypass capacitor shorts, the base dc voltage will**
    a. Decrease c. Remain the same
    b. Increase d. Equal zero

17. **If the collector resistor is shorted, the ac output voltage will**
    a. Decrease c. Remain the same
    b. Increase d. Equal zero

18. **If the load resistance is open, the ac output voltage will**
    a. Decrease
    b. Increase
    c. Remain the same
    d. Equal zero

19. **If any capacitor is open, the ac output voltage will**
    a. Decrease c. Remain the same
    b. Increase d. Equal zero

20. **If the input-coupling capacitor is open, the ac input voltage will**
    a. Decrease c. Remain the same
    b. Increase d. Equal zero

21. **If the bypass capacitor is open, the ac input voltage at the base will**
    a. Decrease c. Remain the same
    b. Increase d. Equal zero

22. **If the output-coupling capacitor is open, the ac input voltage will**
    a. Decrease c. Remain the same
    b. Increase d. Equal zero

23. **If the emitter resistor is open, the ac input voltage at the base will**
    a. Decrease c. Remain the same
    b. Increase d. Equal zero

24. **If the collector resistor is open, the ac input voltage at the base will**
    a. Decrease
    b. Increase
    c. Remain the same
    d. Equal approximately zero

25. **If the emitter-bypass capacitor is shorted, the ac input voltage at the base will**
    a. Decrease c. Remain the same
    b. Increase d. Equal zero

26. **If the input impedance of the second stage decreases, the voltage gain of the first stage will**
    a. Decrease c. Remain the same
    b. Increase d. Equal zero

27. **If the BE diode of the second stage opens, the voltage gain of the first stage will**
    a. Decrease c. Remain the same
    b. Increase d. Equal zero

28. **If the load resistance of the second stage opens, the voltage gain of the first stage will**
    a. Decrease
    b. Increase
    c. Remain the same
    d. Equal zero

Problems

SEC. 10–1 VOLTAGE GAIN

10-1 MultiSim The ac source voltage of Fig. 10-13 doubles. What is the output voltage?

10-2 MultiSim If the load resistance is reduced by one-half in Fig. 10-13, what is the voltage gain?

10-3 MultiSim In Fig. 10-13, the supply voltage increased to +15 V. What is the output voltage?

SEC. 10–2 THE LOADING EFFECT OF INPUT IMPEDANCE

10-4 MultiSim The supply voltage of Fig. 10-14 increased to +15 V. What is the output voltage?

10-5 MultiSim If the emitter resistance is doubled in Fig. 10-14, what is the output voltage?

10-6 MultiSim If the generator resistance of Fig. 10-14 is reduced by one-half, what is the output voltage?

SEC. 10–3 MULTISTAGE AMPLIFIERS

10-7 In Fig. 10-15, what is the ac voltage at the first base? At the second base? Across the load resistor?

10-8 If the supply voltage is doubled in Fig. 10-15, what is the output voltage?

10-9 If $\beta = 300$ in Fig. 10-15, what is the output voltage?

Figure 10-13

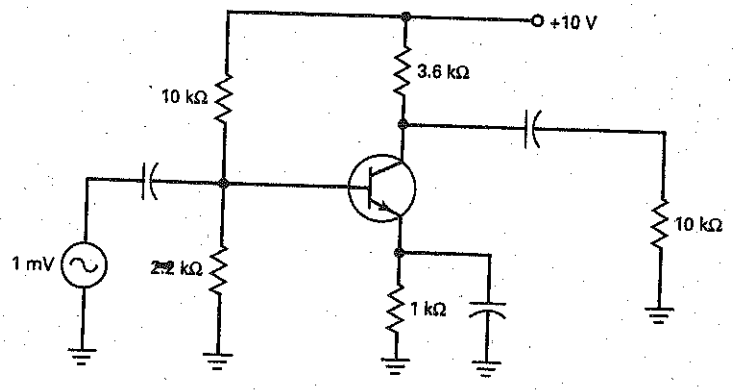

Figure 10-14

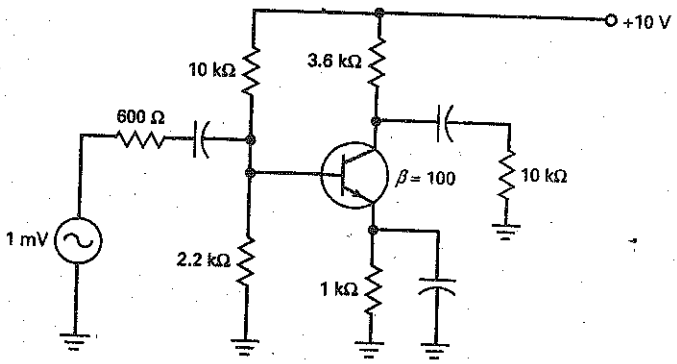

Figure 10-15

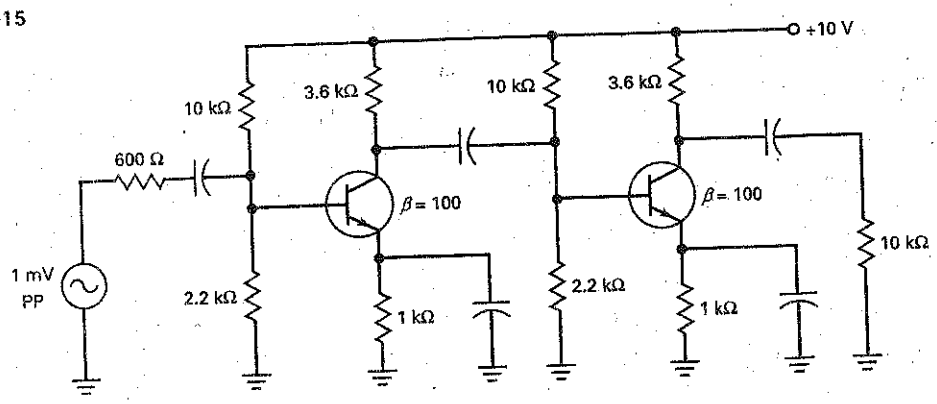

SEC. 10-4 SWAMPED AMPLIFIER

10-10 MultiSim The generator voltage of Fig. 10-16 is reduced by half. What is the output voltage? Ignore r'_e.

10-11 MultiSim If the generator resistance of Fig. 10-16 is 50 Ω, what is the output voltage?

10-12 MultiSim The load resistance of Fig. 10-16 is reduced to 3.6 kΩ. What is the voltage gain?

10-13 MultiSim The supply voltage triples in Fig. 10-16. What is the voltage gain?

SEC. 10-5 TWO-STAGE FEEDBACK

10-14 A feedback amplifier like Fig. 10-10 has $r_f = 5$ kΩ and $r_e = 50$ Ω. What is the voltage gain?

10-15 In a feedback amplifier like Fig. 10-11, $r_e = 125$ Ω. If you want a voltage gain of 100, what value should r_f be?

SEC. 10-6 TROUBLESHOOTING

10-16 In Fig. 10-15, the emitter bypass capacitor is open in the first stage. What happens to the dc voltages of the first stage? To the ac input voltage of the second stage? To the final output voltage?

Figure 10-16

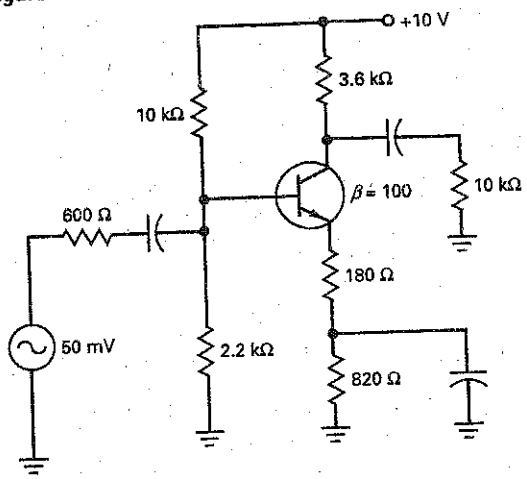

10-17 There is no ac load voltage in Fig. 10-15. The ac input voltage to the second stage is approximately 20 mV. Name some of the possible troubles.

Critical Thinking

10-18 All resistances are doubled in Fig. 10-13. What is the voltage gain?

10-19 If all resistances are doubled in Fig. 10-14, what is the output voltage?

10-20 In Fig. 10-15, all resistances are doubled. What is the output voltage?

10-21 If the load resistor of Fig. 10-15 is disconnected, what is the Thevenin resistance of the second stage?

Troubleshooting

Refer to Fig. 10-17 for the following problems.

10-22 Find Troubles 1 to 4.

10-23 Find Troubles 5 to 8.

10-24 Find Troubles 9 to 12.

Figure 10-17 Troubleshooting.

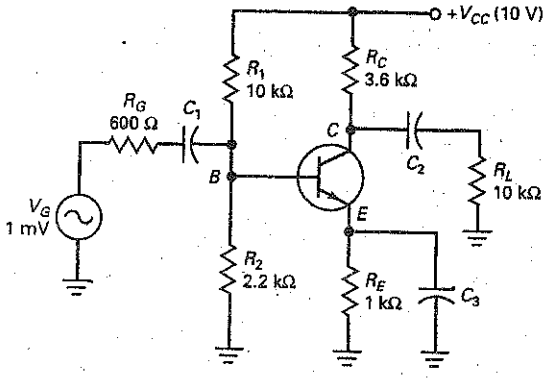

	V_B	V_E	V_C	v_b	v_e	v_c
OK	1.8	1.1	6	0.6 mV	0	73 mV
T1	1.8	1.1	6	0	0	0
T2	1.83	1.13	10	0.75 mV	0	0
T3	1.1	0.4	10	0	0	0
T4	0	0	10	0.8 mV	0	0
T5	1.8	1.1	6	0.6 mV	0	98 mV
T6	3.4	2.7	2.8	0	0	0
T7	1.8	1.1	6	0.75 mV	0.75 mV	1.93 mV
T8	1.1	0.4	0.5	0	0	0
T9	0	0	0	0.75 mV	0	0
T10	1.83	0	10	0.75 mV	0	0
T11	2.1	2.1	2.1	0	0	0
T12	1.8	1.1	6	0	0	0

Job Interview Questions

1. Draw a VDB amplifier. Now, tell me how it works. Include voltage gain and input impedance in your discussion.
2. Draw a swamped amplifier. What is its voltage gain and input impedance? Why does it stabilize voltage gain?
3. In a multistage amplifier, what effect does the input impedance of a stage have on the preceding stage? What effect does a change in β have?
4. What are three improvements that negative feedback makes in an amplifier?
5. You want a circuit like Fig. 10-12 to operate down to 0 Hz. What changes would you have to make?
6. What effect does a swamping resistor have on the voltage gain?
7. What characteristics are desirable in an audio amplifier, and why?
8. What is a swamping resistor, and what does it do?
9. If no value of β is given, what is a reasonable value for a technician to assume?
10. Explain the usefulness of capacitors in multistage voltage amplifiers.
11. What is a swamping resistor? Name three improvements it makes.

Self-Test Answers

1.	c	5.	d	9.	c	13.	a	17.	d	21.	b	25.	a
2.	b	6.	c	10.	c	14.	d	18.	b	22.	c	26.	a
3.	a	7.	c	11.	d	15.	a	19.	a	23.	b	27.	b
4.	c	8.	b	12.	b	16.	a	20.	d	24.	a	28.	c

Practice Problem Answers

10-1 $A_V = 104$

10-2 $V_{out} = 277$ mV

10-3 $V_{out} = 226$ mV

10-4 $V_{out} = 167$ mV

10-5 $V_{out} = 2.24$ V

10-6 $V_{out} = 547$ mV

10-7 Calculated value approximately equal to MultiSim

10-9 $r_f = 4.9$ kΩ

10-12 V_B would increase slightly. $V_E = 0$ V and $V_C = 10$ V. AC measurements would show a slight increase of V_{in} at the base, along with no emitter or collector ac values.

chapter 11

CC and CB Amplifiers

When the load resistance is small compared to the collector resistance, the voltage gain of a CE stage becomes small and the amplifier may become overloaded. One way to prevent overloading is to use a common-collector (CC) amplifier or emitter follower. This type of amplifier has a large input impedance and can drive small load resistances. In addition to emitter followers, this chapter discusses Darlington amplifiers, improved voltage regulation, and common-base (CB) amplifiers.

Objectives

After studying this chapter, you should be able to:

- Draw a diagram of an emitter follower and describe its advantages.
- Analyze an emitter follower for dc and ac operation.
- Describe the purpose of cascading CE and CC amplifiers.
- State the advantages of a Darlington transistor.
- Draw a schematic for a zener follower and discuss how it increases the load current out of a zener regulator.
- Analyze a common-base amplifier for dc and ac operation.
- Compare the characteristics of CE, CC, and CB amplifiers.

Chapter Outline

11-1 CC Amplifier
11-2 Output Impedance
11-3 Cascading CE and CC
11-4 Darlington Connections
11-5 Voltage Regulation
11-6 Common-Base Amplifier

Vocabulary

buffer
common-base (CB) amplifier
common-collector (CC) amplifier
complementary Darlington
Darlington connection
Darlington pair
Darlington transistor
direct coupled
emitter follower
zener follower

11-1 CC Amplifier

The **emitter follower** is also called a **common-collector (CC) amplifier**. The input signal is coupled to the base, and the output signal is taken from the emitter.

Basic Idea

Figure 11-1*a* shows an emitter follower. Because the collector is at ac ground, the circuit is a CC amplifier. The input voltage is coupled to the base. This sets up an ac emitter current and produces an ac voltage across the emitter resistor. This ac voltage is then coupled to the load resistor.

Figure 11-1*b* shows the total voltage between the base and ground. It has a dc component and an ac component. As you can see, the ac input voltage rides on the quiescent base voltage V_{BQ}. Similarly, Fig. 11-1*c* shows the total voltage between the emitter and ground. This time, the ac input voltage is centered on a quiescent emitter voltage V_{EQ}.

The ac emitter voltage is coupled to the load resistor. This output voltage is shown in Fig. 11-1*d*, a pure ac voltage. This output voltage is in phase and is

Figure 11-1 Emitter follower and waveforms.

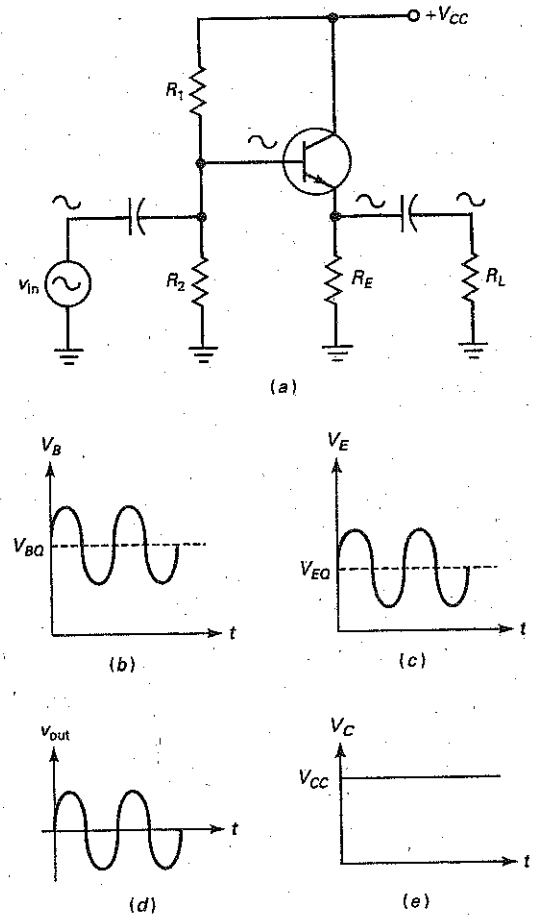

GOOD TO KNOW

In some emitter-follower circuits, a small collector resistance is used to limit the dc collector current in the transistor in case a short occurs between the emitter and ground. If a small R_C is used, the collector will have a bypass capacitor going to ground. The small value of R_C will have only a slight bearing on the dc operation of the circuit and no bearing at all on the circuit's ac operation.

approximately equal to the input voltage. The reason the circuit is called an *emitter follower* is because the output voltage follows the input voltage.

Since there is no collector resistor, the total voltage between the collector and ground equals the supply voltage. If you look at the collector voltage with an oscilloscope, you will see a constant dc voltage like Fig. 11-1*e*. There is no ac signal on the collector because it is an ac ground point.

Negative Feedback

Like a swamped amplifier, the emitter follower uses negative feedback. But with the emitter follower, the negative feedback is massive because the feedback resistance equals all of the emitter resistance. As a result, the voltage gain is ultrastable, the distortion is almost nonexistent, and the input impedance of the base is very high. The trade-off is the voltage gain, which has a maximum value of 1.

AC Emitter Resistance

In Fig. 11-1*a*, the ac signal coming out of the emitter sees R_E in parallel with R_L. Let us define the ac emitter resistance as follows:

$$r_e = R_E \parallel R_L \tag{11-1}$$

This is the external ac emitter resistance, which is different from the internal ac emitter resistance r'_e.

Voltage Gain

Figure 11-2*a* shows the ac equivalent with the T model. Using Ohm's law, we can write these two equations:

$$v_{out} = i_e r_e$$

$$v_{in} = i_e(r_e + r'_e)$$

Divide the first equation by the second, and you get the voltage gain of the emitter follower:

$$A_V = \frac{r_e}{r_e + r'_e} \tag{11-2}$$

Usually, a designer makes r_e much greater than r'_e, so that the voltage gain equals 1 (approximately). This is the value to use for all preliminary analysis and troubleshooting.

Figure 11-2 AC equivalent circuits for emitter follower.

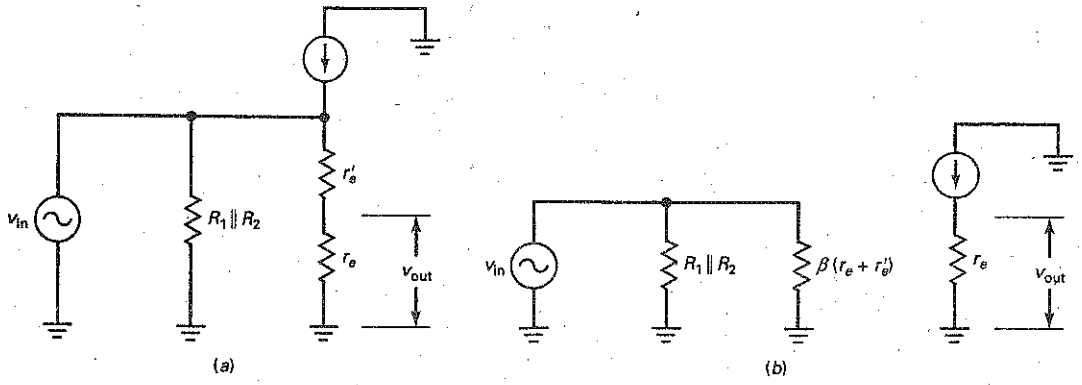

Why is an emitter follower called an *amplifier* if its voltage gain is only 1? Because it has a current gain of β. The stages near the end of a system need to produce more current because the final load is usually a low impedance. The emitter follower can produce the large output currents needed by low-impedance loads. In short, although it is not a voltage amplifier, the emitter follower is a current or power amplifier.

Input Impedance of the Base

Figure 11-2*b* shows the ac equivalent circuit with the π model of the transistor. As far as the input impedance of the base is concerned, the action is the same as that of a swamped amplifier. The current gain transforms the total emitter resistance up by a factor of β. The derivation is therefore identical to that of a swamped amplifier:

$$z_{in(base)} = \beta(r_e + r'_e) \tag{11-3}$$

For troubleshooting, you can assume that r_e is much greater than r'_e, which means that the input impedance is approximately βr_e.

The step-up in impedance is the major advantage of an emitter follower. Small load resistances that would overload a CE amplifier can be used with an emitter follower because it steps up the impedance and prevents overloading.

GOOD TO KNOW

In Fig. 11-3, the biasing resistors R_1 and R_2 lower z_{in} to a value that is not much different from that of a swamped CE amplifier. This disadvantage is overcome in most emitter follower designs by simply not using the biasing resistors R_1 and R_2. Instead, the emitter follower is dc-biased by the stage driving the emitter follower.

Input Impedance of the Stage

When the ac source is not stiff, some of the ac signal will be lost across the internal resistance. If you want to calculate the effect of the internal resistance, you will need to use the input impedance of the stage, given by:

$$z_{in(stage)} = R_1 \parallel R_2 \parallel \beta(r_e + r'_e) \tag{11-4}$$

With the input impedance and the source resistance, you can use the voltage divider to calculate the input voltage reaching the base. The calculations are the same as shown in earlier chapters.

Example 11-1

MultiSim

What is the input impedance of the base in Fig. 11-3 if $\beta = 200$? What is the input impedance of the stage?

Figure 11-3 Example.

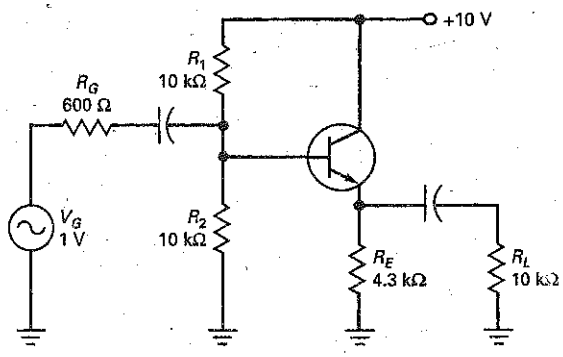

SOLUTION Because each resistance in the voltage divider is 10 kΩ, the dc base voltage is half the supply voltage, or 5 V. The dc emitter voltage is 0.7 V less, or 4.3 V. The dc emitter voltage is 4.3 V divided by 4.3 kΩ, or 1 mA. Therefore, the ac resistance of the emitter diode is:

$$r'_e = \frac{25\text{ mV}}{1\text{ mA}} = 25\ \Omega$$

The external ac emitter resistance is the parallel equivalent of R_E and R_L, which is:

$$r_e = 4.3\text{ k}\Omega \parallel 10\text{ k}\Omega = 3\text{ k}\Omega$$

Since the transistor has an ac current gain of 200, the input impedance of the base is:

$$z_{in(base)} = 200(3\text{ k}\Omega + 25\ \Omega) = 605\text{ k}\Omega$$

The input impedance of the base appears in parallel with the two biasing resistors. The input impedance of the stage is:

$$z_{in(stage)} = 10\text{ k}\Omega \parallel 10\text{ k}\Omega \parallel 605\text{ k}\Omega = 4.96\text{ k}\Omega$$

Because the 605 kΩ is much larger than 5 kΩ, troubleshooters usually approximate the input impedance of the stage as the parallel of the biasing resistors only:

$$z_{in(stage)} = 10\text{ k}\Omega \parallel 10\text{ k}\Omega = 5\text{ k}\Omega$$

PRACTICE PROBLEM 11-1 Find the input impedance of the base and the stage, using Fig. 11-3, if β changes to 100.

Example 11-2

MultiSim

Assuming a β of 200, what is the ac input voltage to the emitter follower of Fig. 11-3?

SOLUTION Figure 11-4 shows the ac equivalent circuit. The ac base voltage appears across z_{in}. Because the input impedance of the stage is large compared to the generator resistance, most of the generator voltage appears at the base. With the voltage-divider theorem:

$$v_{in} = \frac{5\text{ k}\Omega}{5\text{ k}\Omega + 600\ \Omega}1\text{ V} = 0.893\text{ V}$$

Figure 11-4 Example.

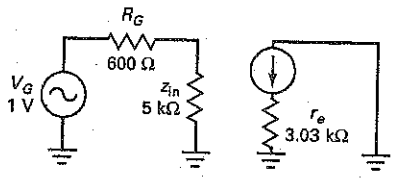

PRACTICE PROBLEM 11-2 If the β value is 100, find the ac input voltage of Fig. 11-3.

Example 11-3

MultiSim

What is the voltage gain of the emitter follower in Fig. 11-5? If $\beta = 150$, what is the ac load voltage?

Figure 11-5 Example.

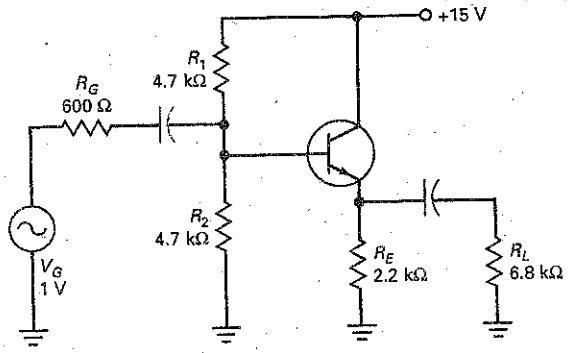

SOLUTION The dc base voltage is half the supply voltage:

$$V_B = 7.5 \text{ V}$$

The dc emitter current is:

$$I_E = \frac{6.8 \text{ V}}{2.2 \text{ k}\Omega} = 3.09 \text{ mA}$$

and the ac resistance of the emitter diode is:

$$r'_e = \frac{25 \text{ mV}}{3.09 \text{ mA}} = 8.09\ \Omega$$

The external ac emitter resistance is:

$$r_e = 2.2 \text{ k}\Omega \parallel 6.8 \text{ k}\Omega = 1.66 \text{ k}\Omega$$

The voltage gain equals:

$$A_V = \frac{1.66 \text{ k}\Omega}{1.66 \text{ k}\Omega + 8.09\ \Omega} = 0.995$$

The input impedance of the base is:

$$z_{in(base)} = 150(1.66 \text{ k}\Omega + 8.09\ \Omega) = 250 \text{ k}\Omega$$

This is much larger than the biasing resistors. Therefore, to a close approximation, the input impedance of the emitter follower is:

$$z_{in(stage)} = 4.7 \text{ k}\Omega \parallel 4.7 \text{ k}\Omega = 2.35 \text{ k}\Omega$$

The ac input voltage is:

$$v_{in} = \frac{2.35 \text{ k}\Omega}{600\ \Omega + 2.35 \text{ k}\Omega} 1 \text{ V} = 0.797 \text{ V}$$

The ac output voltage is:

$$v_{out} = 0.995(0.797 \text{ V}) = 0.793 \text{ V}$$

PRACTICE PROBLEM 11-3 Repeat Example 11-3 using an R_G value of 50 Ω.

11-2 Output Impedance

The output impedance of an amplifier is the same as its Thevenin impedance. One of the advantages of an emitter follower is its low output impedance.

As discussed in earlier electronics courses, maximum power transfer occurs when the load impedance is *matched* (made equal) to the source (Thevenin) impedance. Sometimes, when maximum load power is wanted, a designer can match the load impedance to the output impedance of an emitter follower. For instance, the low impedance of a speaker can be matched to the output impedance of an emitter follower to deliver maximum power to the speaker.

Basic Idea

Figure 11-6*a* shows an ac generator driving an amplifier. If the source is not stiff, some of the ac voltage is dropped across the internal resistance R_G. In this case, we need to analyze the voltage divider shown in Fig. 11-6*b* to get the input voltage v_{in}.

A similar idea can be used with the output side of the amplifier. In Fig. 11-6*c*, we can apply the Thevenin theorem at the load terminals. Looking back into the amplifier, we see an output impedance z_{out}. In the Thevenin equivalent circuit, this output impedance forms a voltage divider with the load resistance, as shown in Fig. 11-6*d*. If z_{out} is much smaller than R_L, the output source is stiff and v_{out} equals v_{th}.

CE Amplifiers

Figure 11-7*a* shows the ac equivalent circuit for the output side of a CE amplifier. When we apply Thevenin's theorem, we get Fig. 11-7*b*. In other words, the output

Figure 11-6 Input and output impedances.

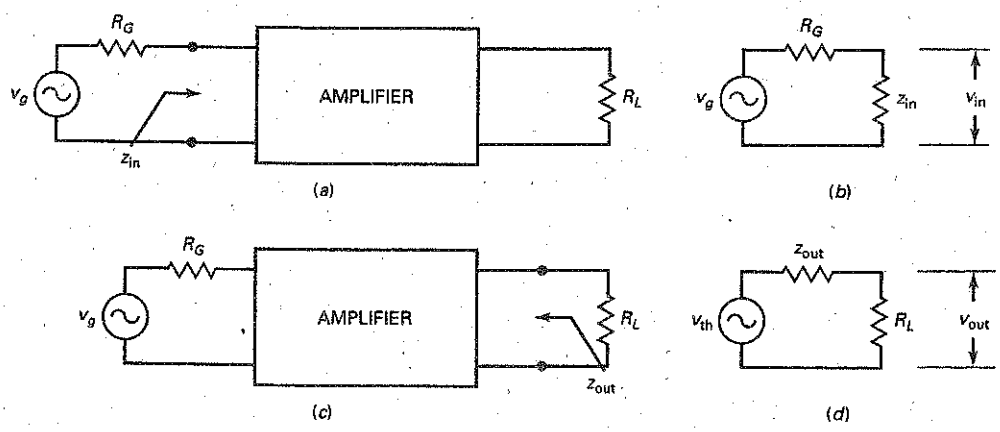

Figure 11-7 Output impedance of CE stage.

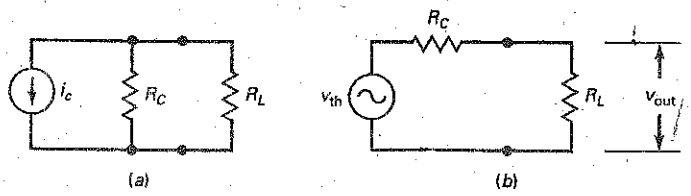

Figure 11-8 Output impedance of emitter follower.

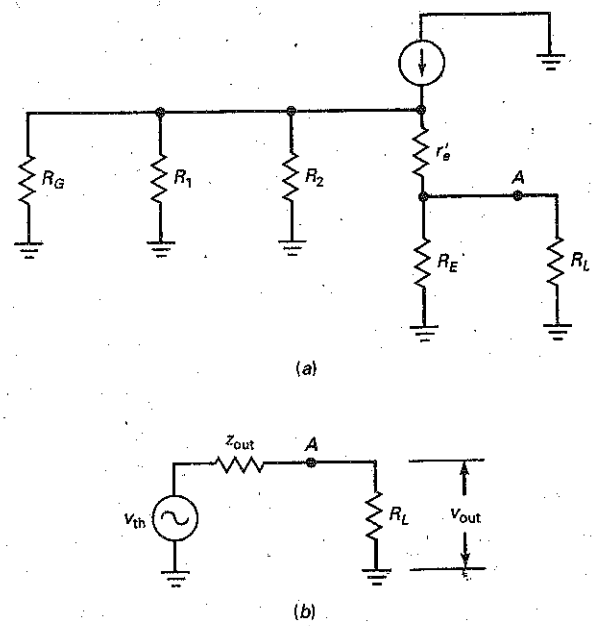

impedance facing the load resistance is R_C. Since the voltage gain of a CE amplifier depends on R_C, a designer cannot make R_C too small without losing voltage gain. Stated another way, it is very difficult to get a small output impedance with a CE amplifier. Because of this, CE amplifiers are not suited to driving small load resistances.

Emitter Follower

Figure 11-8*a* shows the ac equivalent circuit for an emitter follower. When we apply Thevenin's theorem to point *A*, we get Fig. 11-8*b*. The output impedance z_{out} is much smaller than you can get with a CE amplifier. It equals:

$$z_{out} = R_E \parallel \left(r'_e + \frac{R_G \parallel R_1 \parallel R_2}{\beta}\right) \tag{11-5}$$

The impedance of the base circuit is $R_G \parallel R_1 \parallel R_2$. The current gain of the transistor steps this impedance down by a factor of β. The effect is similar to what we get with a swamped amplifier, except that we are moving from the base back to the emitter. Therefore, we get a reduction of impedance rather than an increase. The stepped-down impedance of $(R_G \parallel R_1 \parallel R_2)/\beta$ is in series with r'_e as indicated by Eq. (11-5).

GOOD TO KNOW

Transformers can also be used to match impedances between source and load. Looking into the transformer,

$$z_{in} = \left(\frac{N_p}{N_s}\right)^2 R_L$$

Ideal Action

In some designs the biasing resistances and the ac resistance of the emitter diode become negligible. In this case, the output impedance of an emitter follower can be approximated by:

$$z_{out} = \frac{R_G}{\beta} \tag{11-6}$$

This brings out the key idea of an emitter follower: It steps the impedance of the ac source down by a factor of β. As a result, the emitter follower allows us to build stiff

ac sources. Instead of using a stiff ac source that maximizes the load voltage, a designer may prefer to maximize the load power. In this case, instead of designing for:

$$z_{out} << R_L \qquad \text{(Stiff voltage source)}$$

the designer will select values to get:

$$z_{out} = R_L \qquad \text{(Maximum power transfer)}$$

In this way, the emitter follower can deliver maximum power to a low-impedance load such as a stereo speaker. By basically removing the effect of R_L on the output voltage, the circuit is acting as a buffer between the input and output.

Equation (11-6) is an ideal formula. You can use it to get an approximate value for the output impedance of an emitter follower. With discrete circuits, the equation usually gives only an estimate of the output impedance. Nevertheless, it is adequate for troubleshooting and preliminary analysis. When necessary, you can use Eq. (11-5) to get an accurate value for the output impedance.

Example 11-4

Estimate the output impedance of the emitter follower of Fig. 11-9*a*.

SOLUTION Ideally, the output impedance equals the generator resistance divided by the current gain of the transistor:

$$z_{out} = \frac{600\ \Omega}{300} = 2\ \Omega$$

Figure 11-9*b* shows the equivalent output circuit. The output impedance is much smaller than the load resistance, so that most of the signal appears across the load resistor. As you can see, the output source of Fig. 11-9*b* is almost stiff because the ratio of load to source resistance is 50.

PRACTICE PROBLEM 11-4 Using Fig. 11-9, change the source resistance to 1 kΩ and solve for the approximate z_{out} value.

Example 11-5

Calculate the output impedance in Fig. 11-9*a* using Eq. (11-5).

SOLUTION The quiescent base voltage is approximately:

$$V_{BQ} = 15\ \text{V}$$

Ignoring V_{BE}, the quiescent emitter current is approximately:

$$I_{EQ} = \frac{15\ \text{V}}{100\ \Omega} = 150\ \text{mA}$$

The ac resistance of the emitter diode is:

$$r'_e = \frac{25\ \text{mV}}{150\ \text{mA}} = 0.167\ \Omega$$

The impedance seen looking back from the base is:

$$R_G \parallel R_1 \parallel R_2 = 600\ \Omega \parallel 10\ \text{k}\Omega \parallel 10\ \text{k}\Omega = 536\ \Omega$$

The current gain steps this down to:

$$\frac{R_G \parallel R_1 \parallel R_2}{\beta} = \frac{536\ \Omega}{300} = 1.78\ \Omega$$

Figure 11-9 Example.

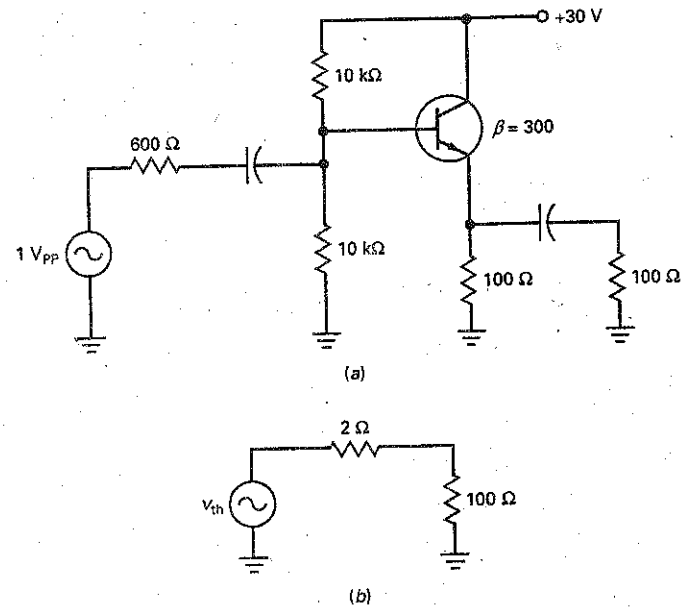

This is in series with r'_e, so that the impedance looking back into the emitter is:

$$r'_e + \frac{R_G \parallel R_1 \parallel R_2}{\beta} = 0.167\ \Omega + 1.78\ \Omega = 1.95\ \Omega$$

This is in parallel with the dc emitter resistance, so that the output impedance is:

$$z_{out} = R_E \parallel \left(r'_e + \frac{R_G \parallel R_1 \parallel R_2}{\beta}\right) = 100\ \Omega \parallel 1.95\ \Omega = 1.91\ \Omega$$

This accurate answer is extremely close to the ideal answer of 2 Ω. This result is typical of many designs. For all troubleshooting and preliminary analysis, you can use the ideal method to estimate the output impedance.

PRACTICE PROBLEM 11-5 Repeat Example 11-5 using an R_G value of 1 kΩ.

11-3 Cascading CE and CC

To illustrate the buffering action of a CC amplifier, suppose we have a load resistance of 270 Ω. If we try to couple the output of a CE amplifier directly into this load resistance, we may overload the amplifier. One way to avoid this overload is by using an emitter follower between the CE amplifier and the load resistance. The signal can be coupled capacitively (this means through coupling capacitors), or it may be **direct coupled** as shown in Fig. 11-10.

As you can see, the base of the second transistor is connected directly to the collector of the first transistor. Because of this, the dc collector voltage of the first transistor is used to bias the second transistor. If the dc current gain of the second transistor is 100, the dc resistance looking into the base of the second transistor is R_{in} = 100 (270 Ω) = 27 kΩ.

Figure 11-10 Direct coupled output stage.

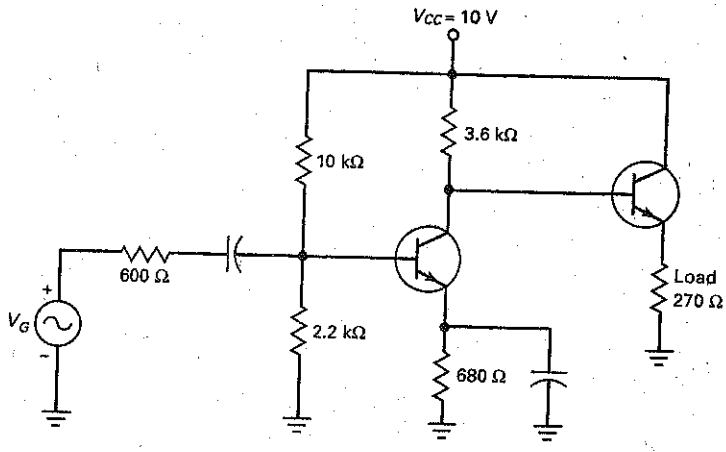

Because 27 kΩ is large compared to the 3.6 kΩ, the dc collector voltage of the first stage is only slightly disturbed.

In Fig. 11-10, the amplified voltage out of the first stage drives the emitter follower and appears across the final load resistance of 270 Ω. Without the emitter follower, the 270 Ω would overload the first stage. But with the emitter follower, its impedance effect is increased by a factor of β. Instead of appearing like 270 Ω, it now looks like 27 kΩ in both the dc and the ac equivalent circuits.

This demonstrates how an emitter follower can act as a **buffer** between a high-output impedance and a low-resistance load.

Example 11-6

MultiSim

What is the voltage gain of the CE stage in Fig. 11-10 for a β of 100?

SOLUTION The dc base voltage of the CE stage is 1.8 V and the dc emitter voltage is 1.1 V. The dc emitter current is $I_E = \frac{1.1\text{ V}}{680\ \Omega} = 1.61$ mA and the ac resistance of the emitter diode is $r'_e = \frac{25\text{ mV}}{1.61\text{ mA}} = 15.5\ \Omega$. Next, we need to calculate the input impedance of the emitter follower. Since there are no biasing resistors, the input impedance equals the input impedance looking into the base: $z_{in} = (100)(270\ \Omega) = 27$ kΩ. The ac collector resistance of the CE amplifier is $r_c = 3.6\text{ k}\Omega \parallel 27\text{ k}\Omega = 3.18$ kΩ and the voltage gain of this stage is

$$A_v = \frac{3.18\text{ k}\Omega}{15.5\ \Omega} = 205$$

PRACTICE PROBLEM 11-6 Using Fig. 11-10, find the voltage gain of the CE stage for a β of 300.

Example 11-7

MultiSim

Suppose the emitter follower is removed in Fig. 11-10 and a capacitor is used to couple the ac signal to the 270 Ω load resistor. What happens to the voltage gain of the CE amplifier?

SOLUTION The value of r'_e remains the same for the CE stage: 15.5 Ω. But the ac collector resistance is much lower. To begin with, the ac collector resistance is the parallel resistance of 3.6 kΩ and 270 Ω: $r_c = 3.6\ \text{k}\Omega \parallel 270\ \Omega = 251\ \Omega$. Because this is much lower, the voltage gain decreases to $A_v = \frac{251\ \Omega}{15.5\ \Omega} = 16.2$.

PRACTICE PROBLEM 11-7 Repeat Example 11-7 using a load resistance of 100 Ω.

This shows you the effects of overloading a CE amplifier. The load resistance should be much greater than the dc collector resistance to get maximum voltage gain. We have just the opposite; the load resistance (270 Ω) is much smaller than the dc collector resistance (3.6 kΩ).

11-4 Darlington Connections

A **Darlington connection** is a connection of two transistors whose overall current gain equals the product of the individual current gains. Since its current gain is much higher, a Darlington connection can have a very high input impedance and can produce very large output currents. Darlington connections are often used with voltage regulators, power amplifiers, and high current switching applications.

Darlington Pair

Figure 11-11*a* shows a **Darlington pair**. Since the emitter current of Q_1 is the base current for Q_2, the Darlington pair has an overall current gain of:

$$\beta = \beta_1\beta_2 \tag{11-7}$$

For instance, if each transistor has a current gain of 200, the overall current gain is:

$$\beta = (200)(200) = 40{,}000$$

Semiconductor manufacturers can put a Darlington pair inside a single case like Fig. 11-11*b*. This device, known as a **Darlington transistor,** acts like a single transistor with a very high current gain. For instance, the 2N6725 is a Darlington transistor with a current gain of 25,000 at 200 mA. As another example, the TIP102 is a power Darlington with a current gain of 1000 at 3 A.

This is shown in the data sheet of Fig. 11-12. Notice that this device uses a TO-220 case style and has built-in base-emitter shunt resistors, along with an

Figure 11-11 (*a*) Darlington pair; (*b*) Darlington transistor; (*c*) complementary Darlington.

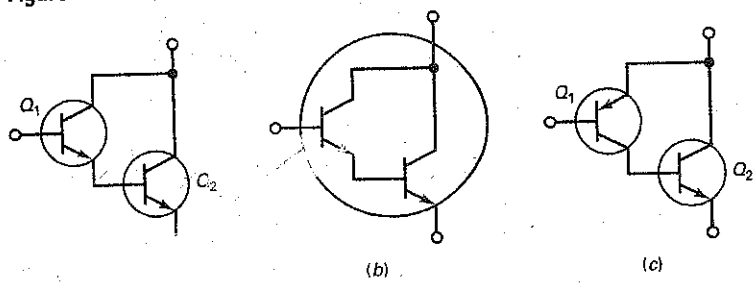

Figure 11-12 Darlington transistor. (Courtesy Fairchild Semiconductor Corporation)

FAIRCHILD SEMICONDUCTOR®

TIP100/101/102

TIP100/101/102

Monolithic Construction With Built In Base-Emitter Shunt Resistors

- High DC Current Gain : h_{FE}=1000 @ V_{CE}=4V, I_C=3A (Min.)
- Collector-Emitter Sustaining Voltage
- Low Collector-Emitter Saturation Voltage
- Industrial Use
- Complementary to TIP105/106/107

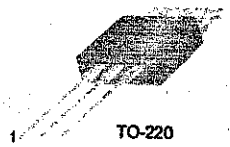

1.Base 2.Collector 3.Emitter

NPN Epitaxial Silicon Darlington Transistor

Absolute Maximum Ratings T_C=25°C unless otherwise noted

Symbol	Parameter	Value	Units
V_{CBO}	Collector-Base Voltage : TIP100	60	V
	: TIP101	80	V
	:TIP102	100	V
V_{CEO}	Collector-Emitter Voltage : TIP100	60	V
	: TIP101	80	V
	: TIP102	100	V
V_{EBO}	Emitter-Base Voltage	5	V
I_C	Collector Current (DC)	8	A
I_{CP}	Collector Current (Pulse)	15	A
I_B	Base Current (DC)	1	A
P_C	Collector Dissipation (T_a=25°C)	2	W
	Collector Dissipation (T_C=25°C)	80	W
T_J	Junction Temperature	150	°C
T_{STG}	Storage Temperature	- 65 ~ 150	°C

Equivalent Circuit

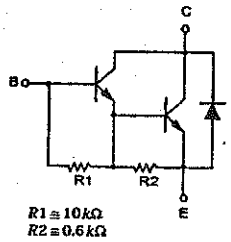

Electrical Characteristics T_C=25°C unless otherwise noted

Symbol	Parameter	Test Condition	Min.	Max.	Units
V_{CEO}(sus)	Collector-Emitter Sustaining Voltage				
	: TIP100	I_C = 30mA, I_B = 0	60		V
	: TIP101		80		V
	: TIP102		100		V
I_{CEO}	Collector Cut-off Current				
	: TIP100	V_{CE} = 30V, I_B = 0		50	μA
	: TIP101	V_{CE} = 40V, I_B = 0		50	μA
	: TIP102	V_{CE} = 50V, I_B = 0		50	μA
I_{CBO}	Collector Cut-off Current				
	: TIP100	V_{CE} = 60V, I_E = 0		50	μA
	: TIP101	V_{CE} = 80V, I_E = 0		50	μA
	: TIP102	V_{CE} = 100V, I_E = 0		50	μA
I_{EBO}	Emitter Cut-off Current	V_{EB} = 5V, I_C = 0		2	mA
h_{FE}	DC Current Gain	V_{CE} = 4V, I_C = 3A	1000	20000	
		V_{CE} = 4V, I_C = 8A	200		
V_{CE}(sat)	Collector-Emitter Saturation Voltage	I_C = 3A, I_B = 6mA		2	V
		I_C = 8A, I_B = 80mA		2.5	V
V_{BE}(on)	Base-Emitter ON Voltage	V_{CE} = 4V, I_C = 8A		2.8	V
C_{ob}	Output Capacitance	V_{CB} = 10V, I_E = 0, f = 0.1MHz		200	pF

©2001 Fairchild Semiconductor Corporation

Rev. A1, June 2001

internal diode. These internal components must be taken into consideration when testing this device with an ohmmeter.

The analysis of a circuit using a Darlington transistor is almost identical to the emitter follower analysis. With the Darlington transistor, since there are two transistors, there are two V_{BE} drops. The base current of Q_2 is the same as the emitter current of Q_1. Also, the input impedance at the base of Q_1 can be found by $z_{in(base)} \cong \beta_1\beta_2 r_e$ or stated as:

$$z_{in(base)} \cong \beta r_e \tag{11-8}$$

Example 11-8

MultiSim

If each transistor of Fig. 11-13 has a beta value of 100, what is the overall current gain, base current of Q_1, and input impedance at the base of Q_1?

Figure 11-13 Example.

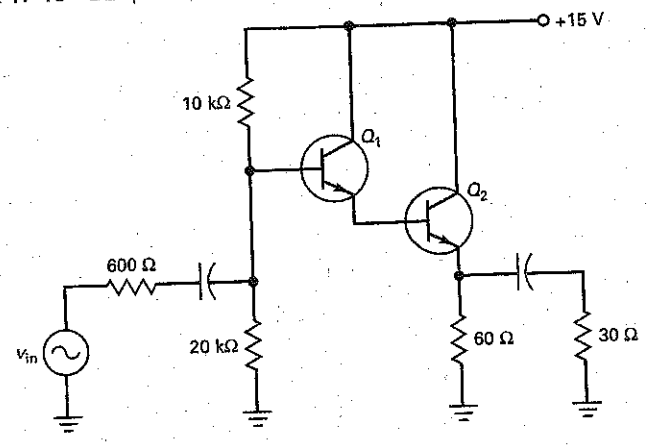

SOLUTION The overall current gain is found by:

$$\beta = \beta_1\beta_2 = (100)(100) = 10{,}000$$

The dc emitter current of Q_2 is:

$$I_{E2} = \frac{10\text{ V} - 1.4\text{ V}}{60\ \Omega} = 143\text{ mA}$$

The emitter current of Q_1 is equal to the base current of Q_2. This is found by:

$$I_{E1} = I_{B2} \cong \frac{I_{E2}}{\beta_2} = \frac{143\text{ mA}}{100} = 1.43\text{ mA}$$

The base current of Q_1 is:

$$I_{B1} = \frac{I_{E1}}{\beta_1} = \frac{1.43\text{ mA}}{100} = 14.3\ \mu\text{A}$$

To find the input impedance at the base of Q_1, first solve for r_e. The ac emitter resistance is:

$$r_e = 60\ \Omega \parallel 30\ \Omega = 20\ \Omega$$

The input impedance of the Q_1 base is: $z_{in(base)} = (10{,}000)(20\ \Omega) = 200\text{ k}\Omega$

PRACTICE PROBLEM 11-8 Repeat Example 11-8 using a Darlington pair with each transistor having a current gain of 75.

Complementary Darlington

Figure 11-11*c* shows another Darlington connection called a **complementary Darlington,** a connection of *npn* and *pnp* transistors. The collector current of Q_1 is the base current of Q_2. If the *pnp* transistor has a current gain of β_1 and the *npn* output transistor has a current gain of β_2 the complementary Darlington acts like a single *pnp* transistor with a current gain of $\beta_1\beta_2$.

Npn and *pnp* Darlington transistors can be manufactured to be complements to each other. As an example, the TIP105/106/107 *pnp* Darlington series is complementary to the TIP/101/102 *npn* series.

GOOD TO KNOW

The complementary Darlington transistor in Fig. 11-11c was originally developed because complementary high-power transistors were not readily available. The complementary transistor is often used in a special stage known as a *quasi-complementary output stage.*

11-5 Voltage Regulation

Besides being used in buffer circuits and impedance matching amplifiers, the emitter follower is widely used in voltage regulators. In conjunction with a zener diode, the emitter follower can produce regulated output voltages with much larger output currents.

Zener Follower

Figure 11-14*a* shows a **zener follower,** a circuit that combines a zener regulator and an emitter follower. Here is how it works: The zener voltage is the input to the base of the emitter follower. The dc output voltage of the emitter follower is:

$$V_{out} = V_Z - V_{BE} \tag{11-9}$$

This output voltage is fixed so that it is equal to the zener voltage minus the V_{BE} drop of the transistor. If the supply voltage changes, the zener voltage remains approximately constant, and so does the output voltage. In other words, the circuit acts like a voltage regulator because the output voltage is always one V_{BE} drop less than the zener voltage.

GOOD TO KNOW

In Fig. 11-14, the emitter-follower circuit reduces the zener current variations by a factor of β if you compare the zener current variations that would exist if the transistor were not there.

Figure 11-14 (*a*) Zener follower; (*b*) ac equivalent circuit.

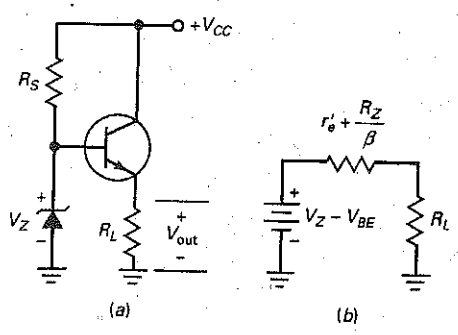

The zener follower has two advantages over an ordinary zener regulator: First, the zener diode of Fig. 11-14*a* has to produce a load current of only

$$I_B \approx \frac{I_{out}}{\beta_{dc}} \tag{11-10}$$

Since this base current is much smaller than the output current, we can use a much smaller zener diode.

For instance, if you are trying to supply several amperes to a load resistor, an ordinary zener regulator requires a zener diode capable of handling several amperes. On the other hand, with the improved regulator of Fig. 11-14*a*, the zener diode needs to handle only tens of milliamperes.

The second advantage of a zener follower is its low output impedance. In an ordinary zener regulator, the load resistor sees an output impedance of approximately R_Z, the zener impedance. But in the zener follower, the output impedance is:

$$z_{out} = r'_e + \frac{R_Z}{\beta_{dc}} \tag{11-11}$$

Figure 11-14*b* shows the equivalent output circuit. Because z_{out} is usually very small compared to R_L, an emitter follower can hold the dc output voltage almost constant because the source looks stiff.

In summary, the zener follower provides the regulation of a zener diode with the increased current-handling capability of an emitter follower.

Two-Transistor Regulator

Figure 11-15 shows another voltage regulator. The dc input voltage V_{in} comes from an unregulated power supply such as a bridge rectifier with a capacitor-input filter. Typically, V_{in} has a peak-to-peak ripple of about 10 percent of the dc voltage. The final output voltage V_{out} has almost no ripple and is almost constant in value, even though the input voltage and load current may vary over a large range.

How does it work? Any attempted change in output voltage produces an amplified feedback voltage that opposes the original change. For instance, suppose the output voltage increases. Then, the voltage appearing at the base of Q_1 will increase. Since Q_1 and R_2 form a CE amplifier, the collector voltage of Q_1 will decrease because of the voltage gain.

Since the collector voltage of Q_1 has decreased, the base voltage of Q_2 decreases. Because Q_2 is an emitter follower, the output voltage will decrease. In other words, we have negative feedback. The original increase in output voltage produces an opposing decrease in output voltage. The overall effect is that the output voltage will increase only slightly, much less than it would without the negative feedback.

Figure 11-15 Transistor voltage regulator.

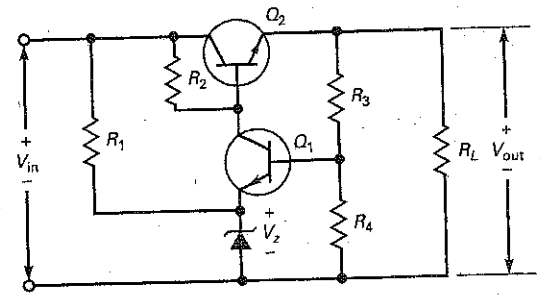

Conversely, if the output voltage tries to decrease, less voltage appears at the Q_1 base, more voltage appears at the Q_1 collector, and more voltage appears at the Q_2 emitter. Again, we have a returning voltage that opposes the original change in output voltage. Therefore, the output voltage will decrease only a little, far less than without the negative feedback.

Because of the zener diode, the Q_1 emitter voltage equals V_Z. The Q_1 base voltage is one V_{BE} drop higher. Therefore, the voltage across R_4 is:

$$V_4 = V_Z + V_{BE}$$

With Ohm's law, the current through R_4 is:

$$I_4 = \frac{V_Z + V_{BE}}{R_4}$$

Since this current flows through R_3 in series with R_4, the output voltage is:

$$V_{out} = I_4(R_3 + R_4)$$

After expanding:

$$V_{out} = \frac{R_3 + R_4}{R_4}(V_Z + V_{BE}) \tag{11-12}$$

Example 11-9

MultiSim

Figure 11-16 shows a zener follower as it is usually drawn on a schematic diagram. What is the output voltage? What is the zener current if $\beta_{dc} = 100$?

Figure 11-16 Example.

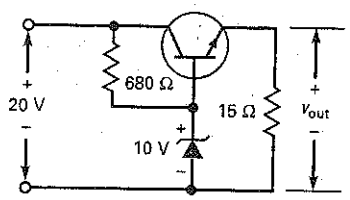

SOLUTION The output voltage is approximately:

$$V_{out} = 10\text{ V} - 0.7\text{ V} = 9.3\text{ V}$$

With a load resistance of 15 Ω, the load current is:

$$I_{out} = \frac{9.3\text{ V}}{15\,\Omega} = 0.62\text{ A}$$

The base current is:

$$I_B = \frac{0.62\text{ A}}{100} = 6.2\text{ mA}$$

The current through the series resistor is:

$$I_S = \frac{20\text{ V} - 10\text{ V}}{680\,\Omega} = 14.7\text{ mA}$$

The zener current is:

$$I_Z = 14.7\text{ mA} - 6.2\text{ mA} = 8.5\text{ mA}$$

PRACTICE PROBLEM 11-9 Repeat Example 11-9 using an 8.2 V zener diode and an input voltage of 15 V.

Example 11-10

MultiSim

What is the output voltage in Fig. 11-17?

Figure 11-17 Example.

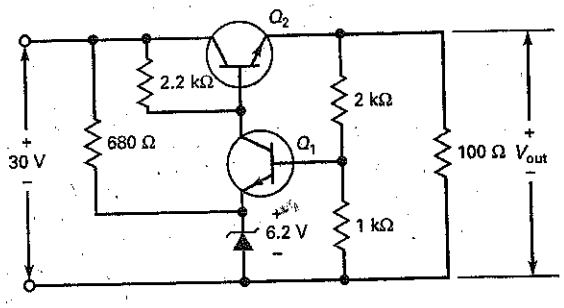

SOLUTION With Eq. (11-12):

$$V_{out} = \frac{2\text{ k}\Omega + 1\text{ k}\Omega}{1\text{ k}\Omega}(6.2\text{ V} + 0.7\text{ V}) = 20.7\text{ V}$$

You can also solve the problem as follows: The current through the 1-kΩ resistor is:

$$I_4 = \frac{6.2\text{ V} + 0.7\text{ V}}{1\text{ k}\Omega} = 6.9\text{ mA}$$

This current flows through a total resistance of 3 kΩ, which means that the output voltage is:

$$V_{out} = (6.9\text{ mA})(3\text{ k}\Omega) = 20.7\text{ V}$$

PRACTICE PROBLEM 11-10 Using Fig. 11-17, change the zener value to 5.6 V and find the new V_{out} value.

11-6 The Common-Base Amplifier

Figure 11-18*a* shows a **common-base (CB) amplifier** using a dual polarity or split power supply. Since the base is grounded, this circuit is also called a grounded-based amplifier. The *Q* point is set by emitter bias as shown by the dc