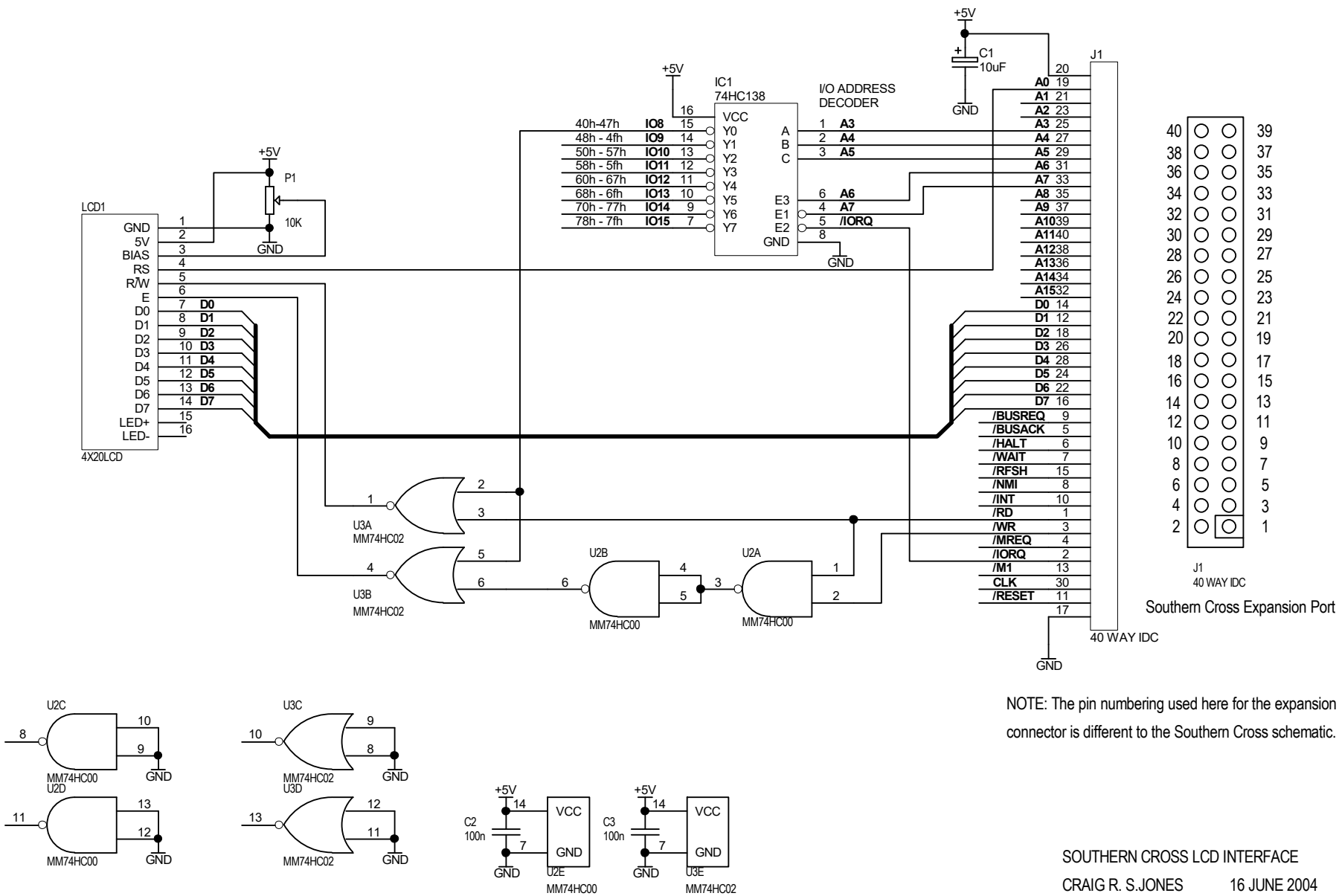

NOTE: The pin numbering used here for the expansion connector is different to the Southern Cross schematic.

SOUTHERN CROSS LCD INTERFACE

CRAIG R. S.JONES 16 JUNE 2004

Revision 01