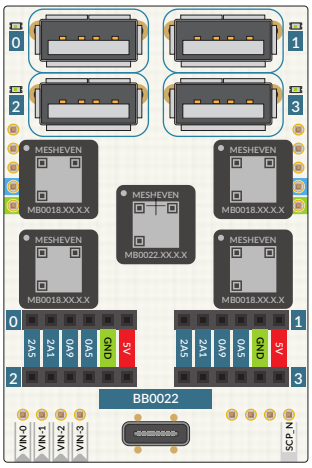
MESHEVEN
MB0018.XX.X.X
MB0022.XX.X.X
2A5
2A1
0A9
0A5
GND
5V
BB0022
VIN-0
VIN-1
VIN-2
VIN-3
SCP_N

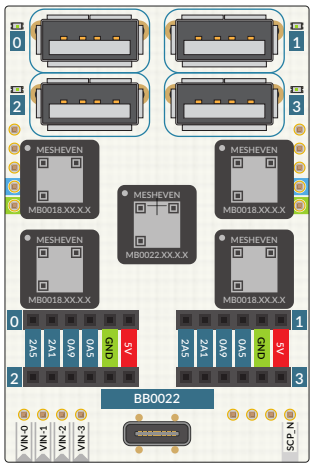
MESHEVEN
MB0018.XX.X.X
MB0022.XX.X.X
2A5
2A1
0A9
0A5
GND
5V
BB0022
VIN-0
VIN-1
VIN-2
VIN-3
SCP_N

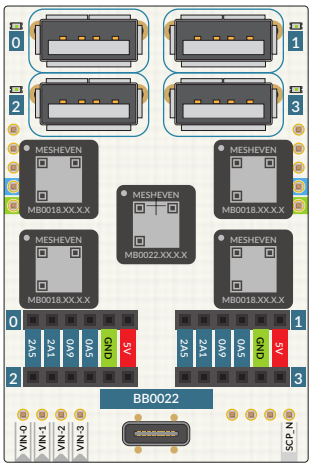
MESHEVEN
MB0018.XX.X.X
MB0022.XX.X.X
2A5
2A1
0A9
0A5
GND
5V
BB0022
VIN-0
VIN-1
VIN-2
VIN-3
SCP_N

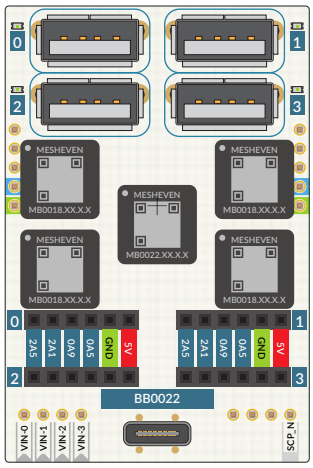
MESHEVEN
MB0018.XX.X.X
MB0022.XX.X.X
2A5
2A1
0A9
0A5
GND
5V
BB0022
VIN-0
VIN-1
VIN-2
VIN-3
SCP_N

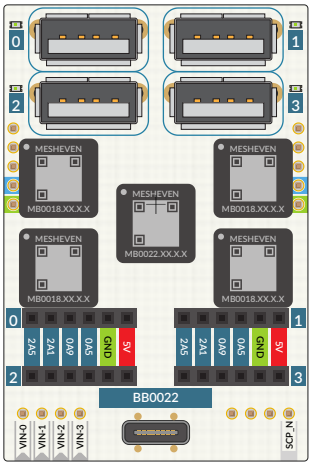
MESHEVEN
MB0018.XX.X.X
MB0022.XX.X.X
2A5
2A1
0A9
0A5
GND
5V
BB0022
VIN-0
VIN-1
VIN-2
VIN-3
SCP_N

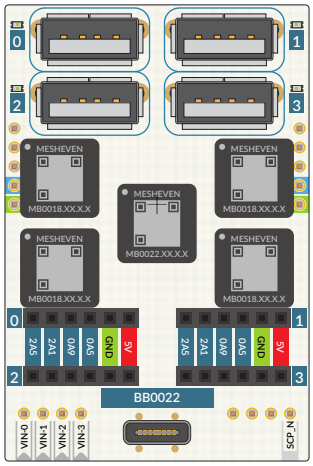
MESHEVEN
MB0018.XX.X.X
MB0022.XX.X.X
2A5
2A1
0A9
0A5
GND
5V
BB0022
VIN-0
VIN-1
VIN-2
VIN-3
SCP_N

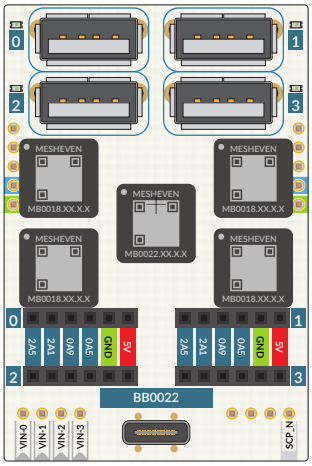
MESHEVEN
MB0018.XX.X.X
MB0022.XX.X.X
2A5
2A1
0A9
0A5
GND
5V
BB0022
VIN-0
VIN-1
VIN-2
VIN-3
SCP_N

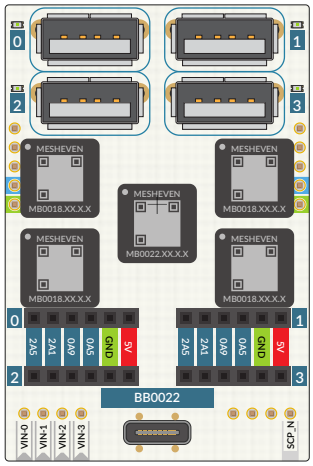
MESHEVEN
MB0018.XX.X.X
MB0022.XX.X.X
2A5
2A1
0A9
0A5
GND
5V
BB0022
VIN-0
VIN-1
VIN-2
VIN-3
SCP_N

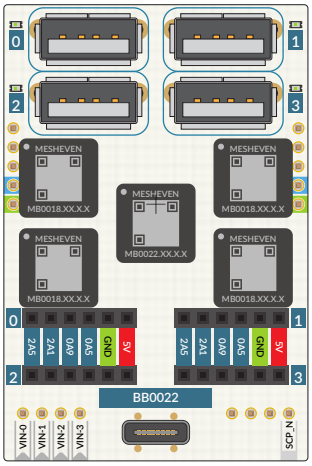
MESHEVEN
MB0018.XX.X.X
MB0022.XX.X.X
2A5
2A1
0A9
0A5
GND
5V
BB0022
VIN-0
VIN-1
VIN-2
VIN-3
SCP_N

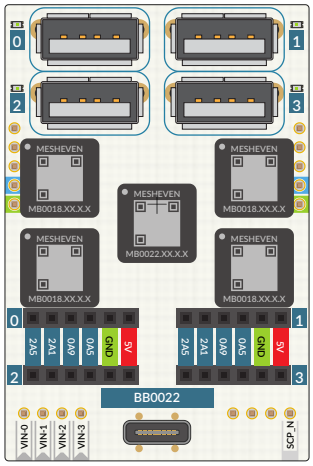
MESHEVEN
MB0018.XX.X.X
MB0022.XX.X.X
2A5
2A1
0A9
0A5
GND
5V
BB0022
VIN-0
VIN-1
VIN-2
VIN-3
SCP_N

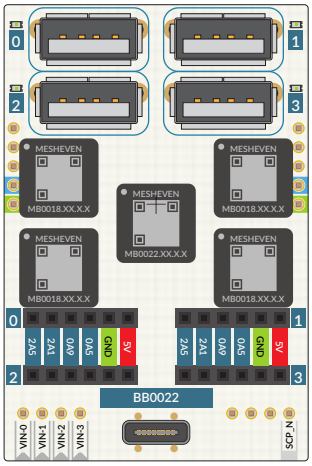
MESHEVEN
MB0018.XX.X.X
MB0022.XX.X.X
2A5
2A1
0A9
0A5
GND
5V
BB0022
VIN-0
VIN-1
VIN-2
VIN-3
SCP_N

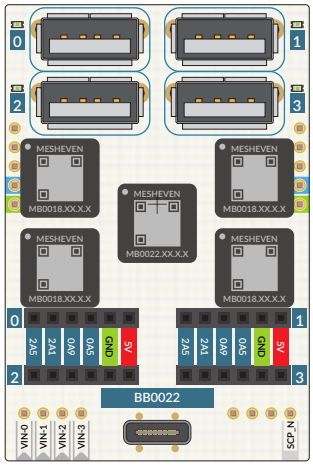
MESHEVEN
MB0018.XX.X.X
MB0022.XX.X.X
2A5
2A1
0A9
0A5
GND
5V
BB0022
VIN-0
VIN-1
VIN-2
VIN-3
SCP_N

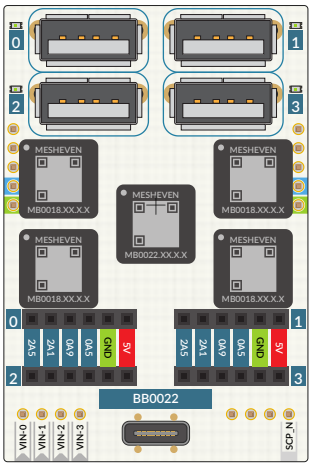
MESHEVEN
MB0018.XX.X.X
MB0022.XX.X.X
2A5
2A1
0A9
0A5
GND
5V
BB0022
VIN-0
VIN-1
VIN-2
VIN-3
SCP_N

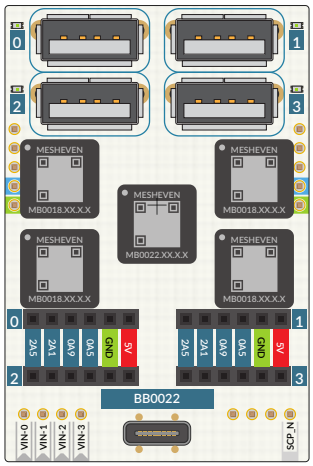
MESHEVEN
MB0018.XX.X.X
MB0022.XX.X.X
2A5
2A1
0A9
0A5
GND
5V
BB0022
VIN-0
VIN-1
VIN-2
VIN-3
SCP_N

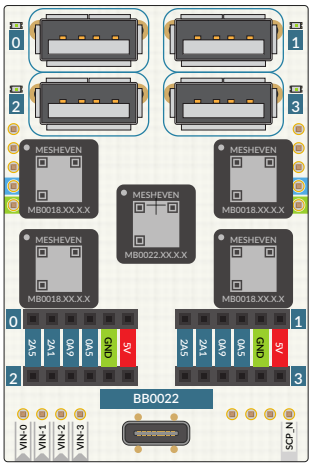
MESHEVEN
MB0018.XX.X.X
MB0022.XX.X.X
2A5
2A1
0A9
0A5
GND
5V
BB0022
VIN-0
VIN-1
VIN-2
VIN-3
SCP_N

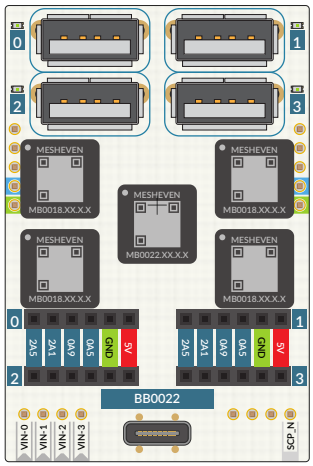
MESHEVEN
MB0018.XX.X.X
MB0022.XX.X.X
2A5
2A1
0A9
0A5
GND
5V
BB0022
VIN-0
VIN-1
VIN-2
VIN-3
SCP_N