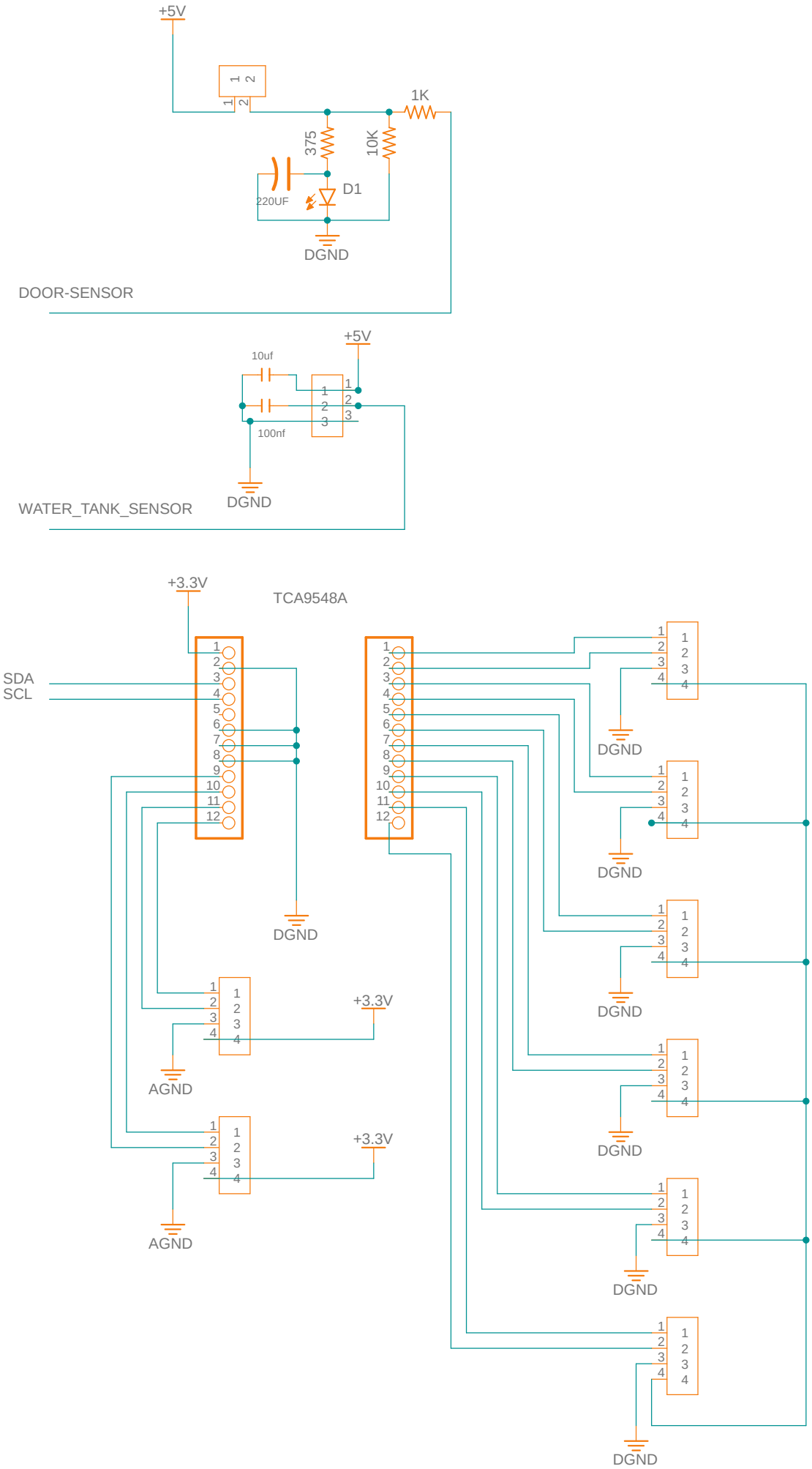
+5V
1K
375
10K
220UF
D1
DGND
DOOR-SENSOR
+5V
10uf
100nf
DGND
WATER_TANK_SENSOR
+3.3V
TCA9548A
SDA
SCL
DGND
+3.3V
AGND
+3.3V
AGND
DGND
DGND
DGND
DGND
DGND
DGND