powertip
Embedded Solutions

SOM Type-1

P05D00120-00

STM STM32MP257

Front View

Features

- Featuring a dual-core ARM Cortex-A35 for efficient and reliable processing
- Faster Development: Supported by the ST ecosystem and OpenSTLinux, a mainline Yocto-based Linux distribution
- Industrial, medical, kiosks, PoS, and other multimedia and AIoT application
- Built-in NPU enables efficient on-device AI processing for tasks such as object detection, classification, and predictive

Specifications

Hardware			
CPU	STM32MP257	Quad-Core ARM Cortex-A35	
GPU	VeriSilicon GC8000UL	OpenGL ES 3.1, OpenCL 3.0, Vulkan 1.3, OpenVX 1.3, OpenVG 1.2	
NPU		Accelerator with processing performance up to 1.35 TOPS	
Memory	On Board RAM	2GB LPDDR4 SDRAM	
	On Board Flash	8GB eMMC Flash	
I/O	Display	Dual LVDS	24 bits Parallel RGB
	Camera	2-lane MIPI-CSI	
	USB	1 × USB 2.0, 1 × PCIe or 1 × USB 2.0, 1 × USB 3.0, Type-C support (UCPD, includes two CC-lines)	
	Ethernet	10/100/1000 Mbps	
	Default Peripheral (maximum)	3 × USART 2 × UART 1 × LPUART 4 × I2C 1 × SPI	2 × I2S 2 × FDCAN 2 × SDMMC 2 × PWM GPIOs

Software		
OS	Linux	Yocto
	Android	

Block Diagram

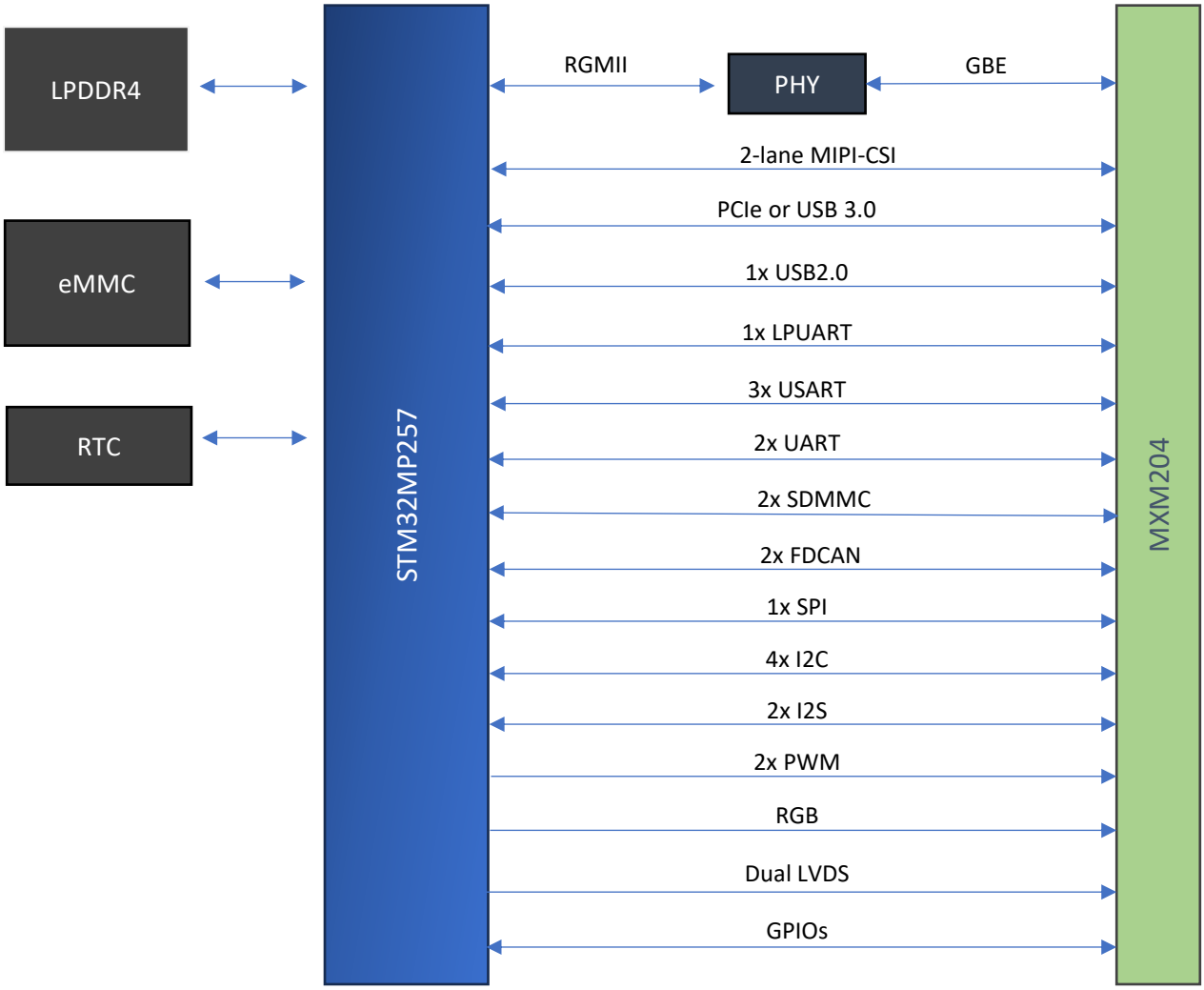
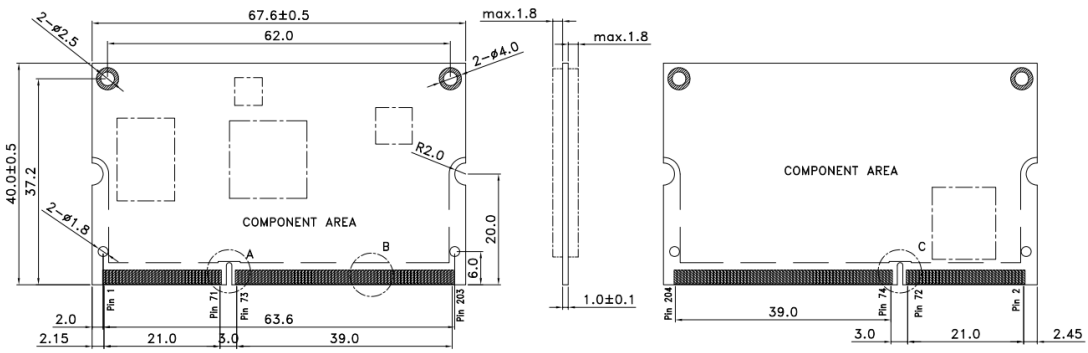
Dimensions