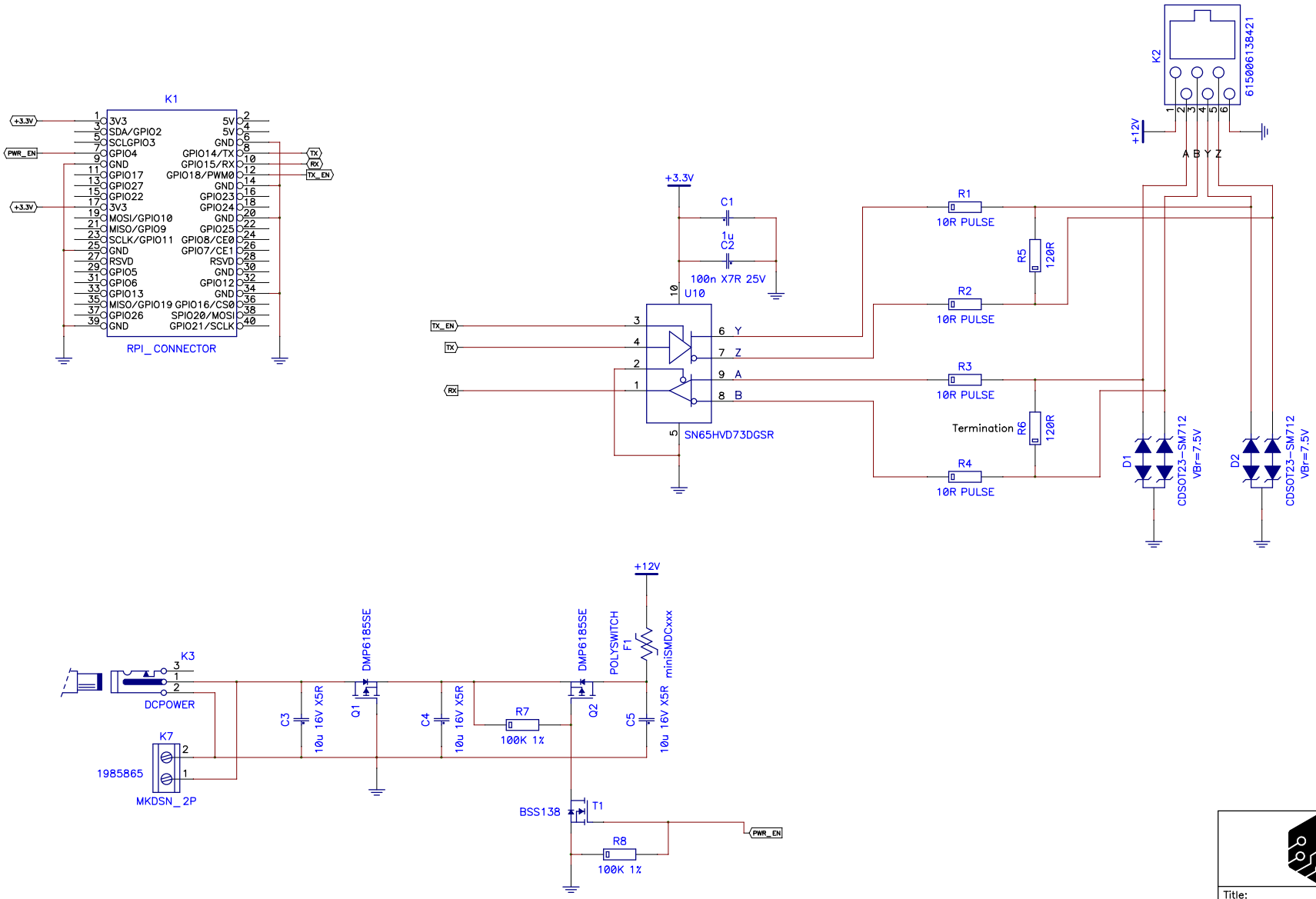

M91200
DESIGN.BUILD.PROTOTYPE.

Title:	R-Pi RS485 Hat		
Customer:	Plense	Rev:	V1
Date:	Feb 2024	Drawn by:	Marcel Flipse
Filename:	PI485_v1.SCH	Sheet:	1 of 1