ONE QUBIT, MANY PROBLEMS

MARLON JOST, AUSTIN JACKSON, CLAUDIA FRIEDSAM, NOBLE AGYEMAN-BOBIE, MARCOS VELAZQUEZ RAMOS

SYNTHESIS PART 2: GRIDSYNTH

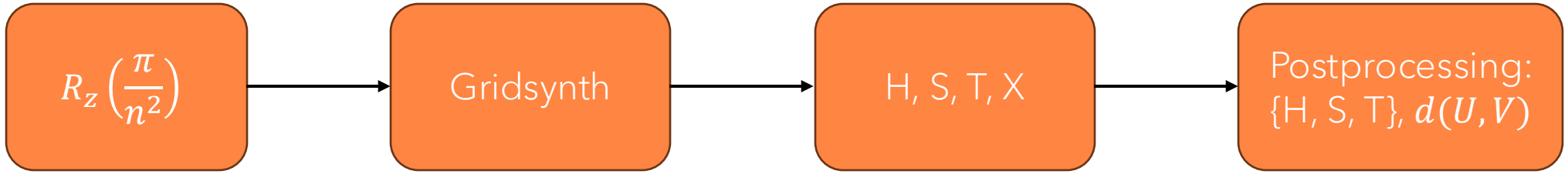

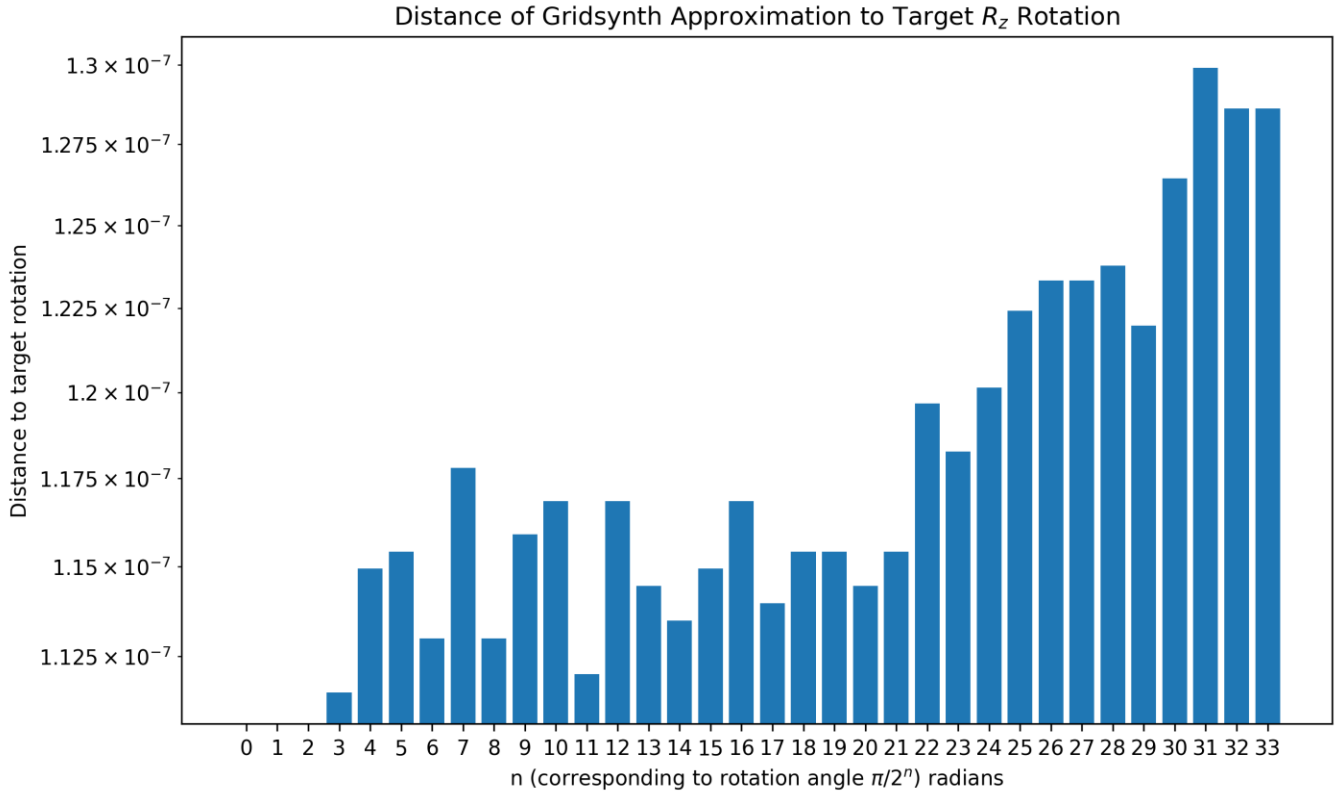

SYNTHESIS PART 3:

Simply swap each T with this teleportation!

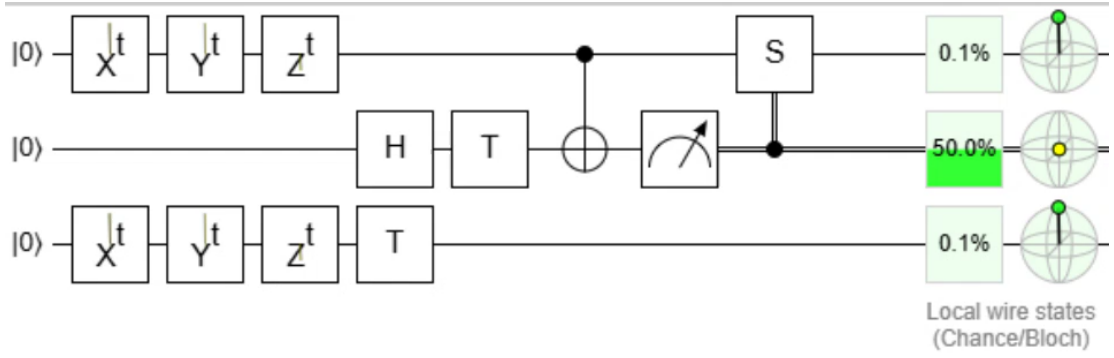

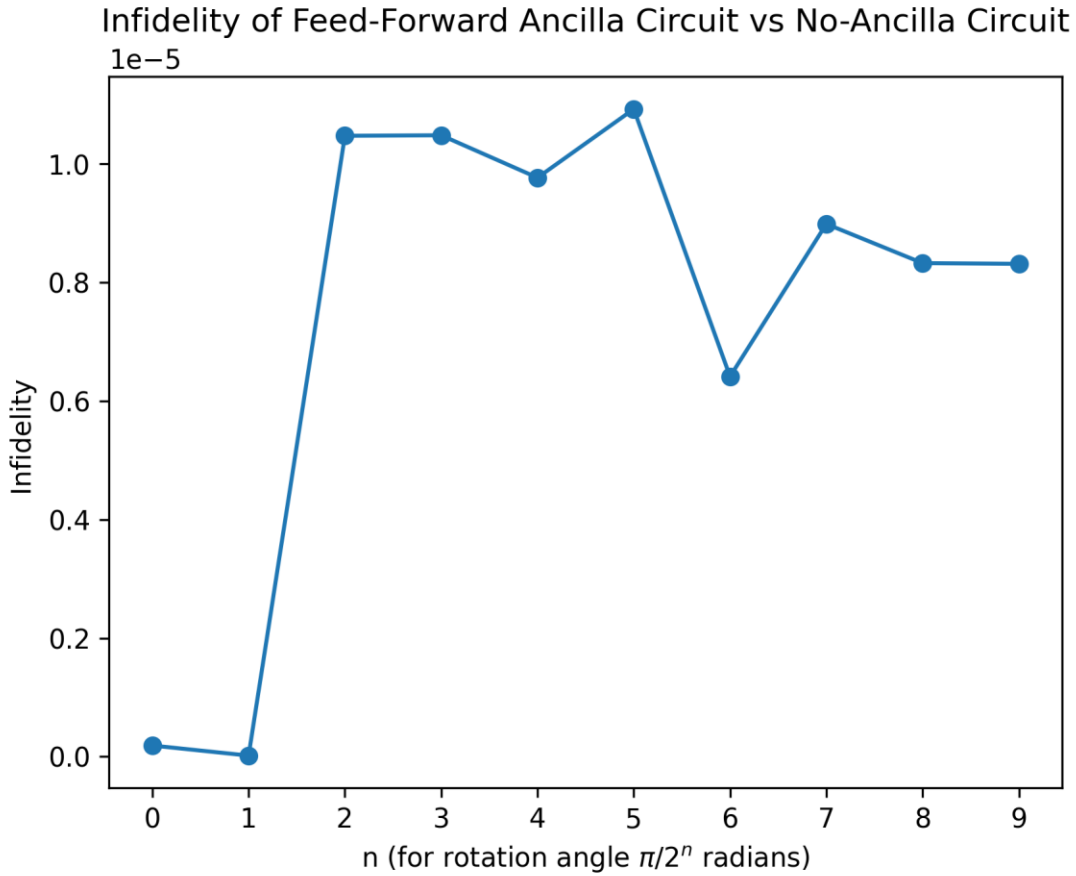

SYNTHESIS PART 4:

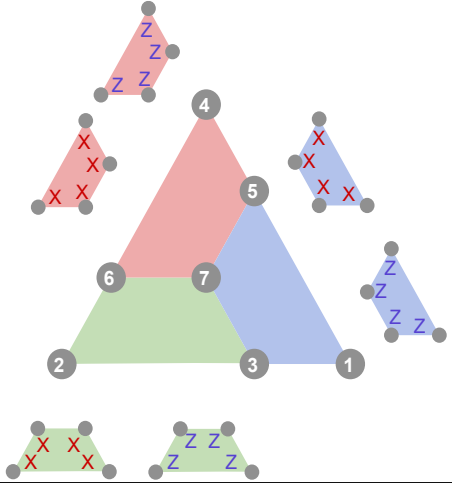

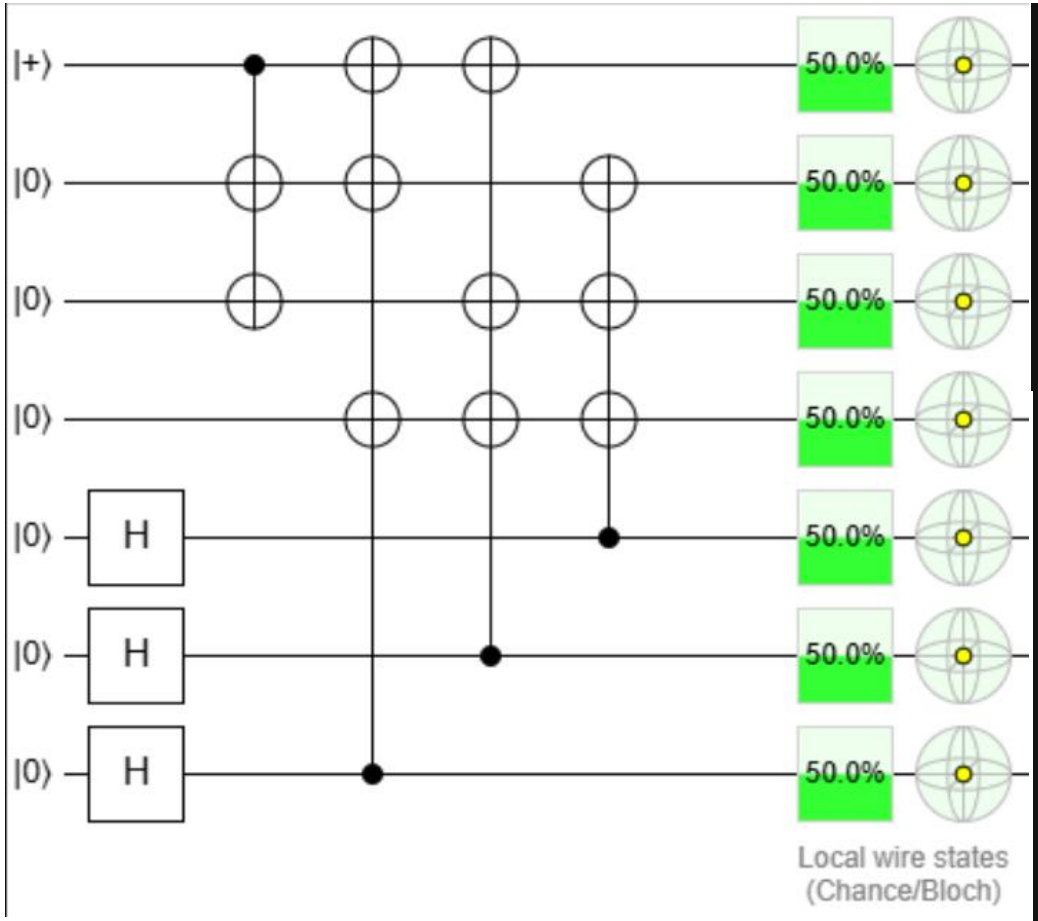

$$|\bar{0}\rangle = \frac{1}{\sqrt{8}}\Big(|0000000\rangle + |1010101\rangle + |0110011\rangle + |1100110\rangle + |0001111\rangle + |1011010\rangle + |0111100\rangle + |1101001\rangle\Big)$$

$$|\bar{1}\rangle = \frac{1}{\sqrt{8}}\Big(|1111111\rangle + |0101010\rangle + |1001100\rangle + |0011001\rangle + |1110000\rangle + |0100101\rangle + |1000011\rangle + |0010110\rangle\Big).$$

```
Trial for n=0:
[[0.49999996+0.j 0.        +0.j]
 [0.        +0.j 0.49999996+0.j]] [[0.50000001+0.j 0.        +0.j]
 [0.        +0.j 0.50000001+0.j]]
States match?: True
Trial for n=1:
[[0.49999994+0.j 0.        +0.j]
 [0.        +0.j 0.49999994+0.j]] [[0.49999976+0.j 0.        +0.j]
 [0.        +0.j 0.49999976+0.j]]
States match?: True
Trial for n=2:
[[0.49999999+0.j 0.        +0.j]
 [0.        +0.j 0.49999999+0.j]] [[0.49999984+0.j 0.        +0.j]
 [0.        +0.j 0.49999984+0.j]]
States match?: True
Trial for n=3:
```

STAR PART 2

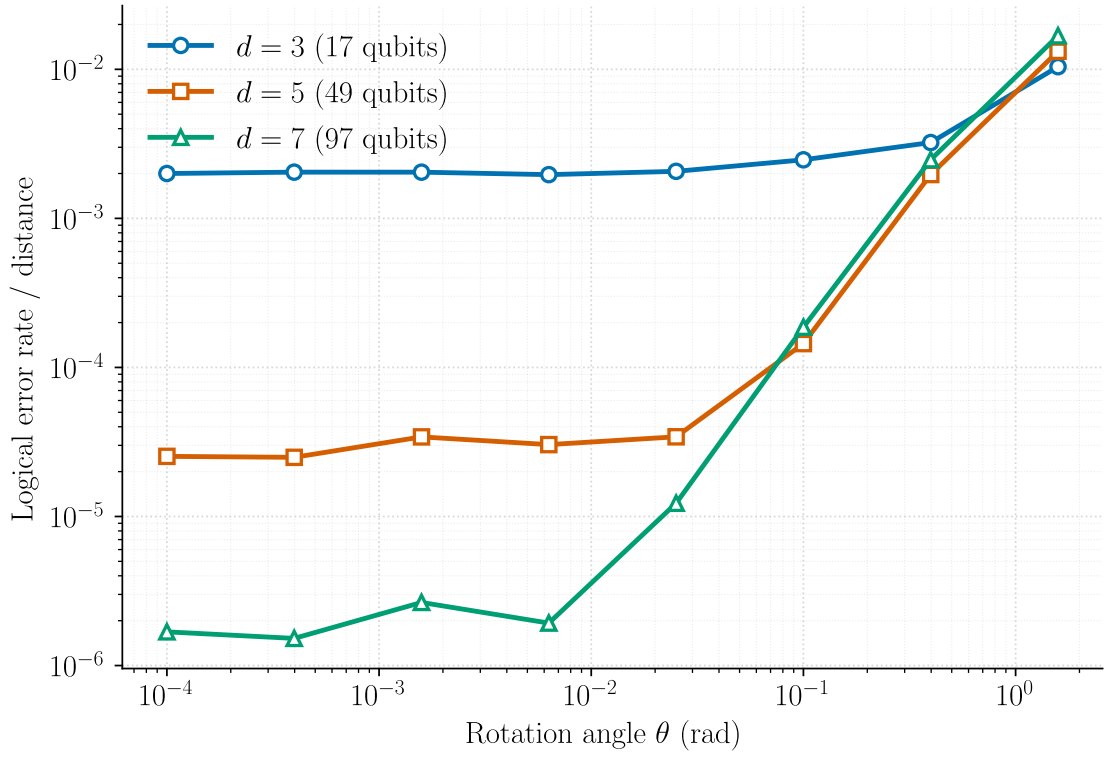

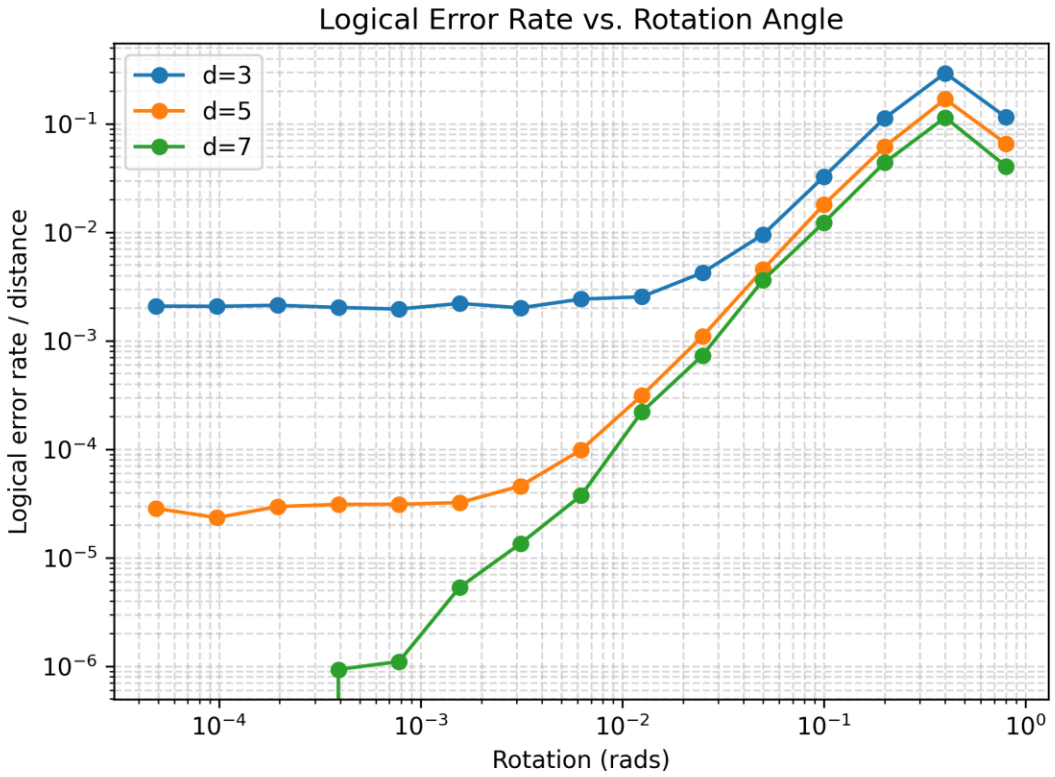


```
SHOTS = 1_000_000_000_000_000_000_000_000_000_000
```

STAR PART 3

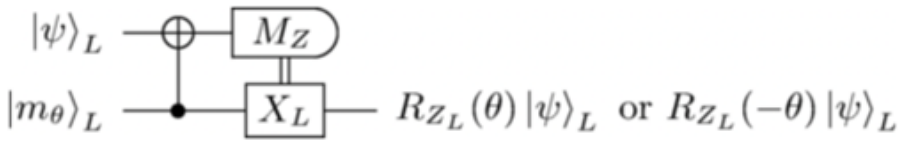
$|\psi\rangle_L$
$|m_\theta\rangle_L$
M_Z
X_L
$R_{Z_L}(\theta)\,|\psi\rangle_L$ or $R_{Z_L}(-\theta)\,|\psi\rangle_L$

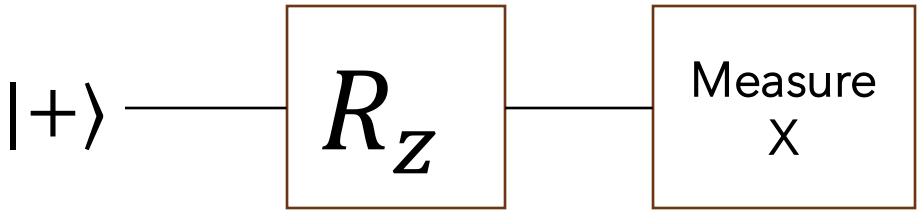
$|+\rangle$
R_Z
Measure
X

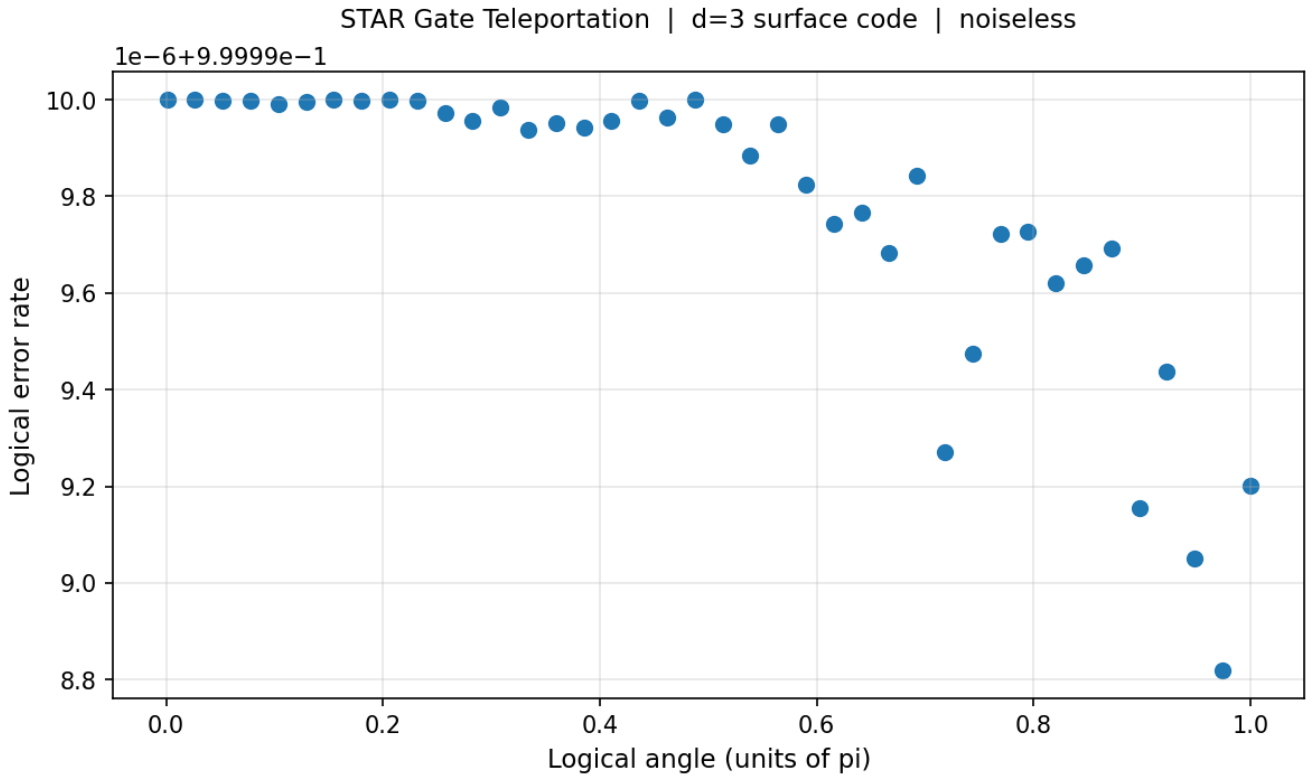
STAR Gate Teleportation | d=3 surface code | noiseless
1e−6+9.9999e−1
10.0
9.8
9.6
9.4
9.2
9.0
8.8
Logical error rate
0.0
0.2
0.4
0.6
0.8
1.0
Logical angle (units of pi)

AI USE

- We used AI to help research the background necessary to understand the challenges, draft and debug code, and draft the paper!