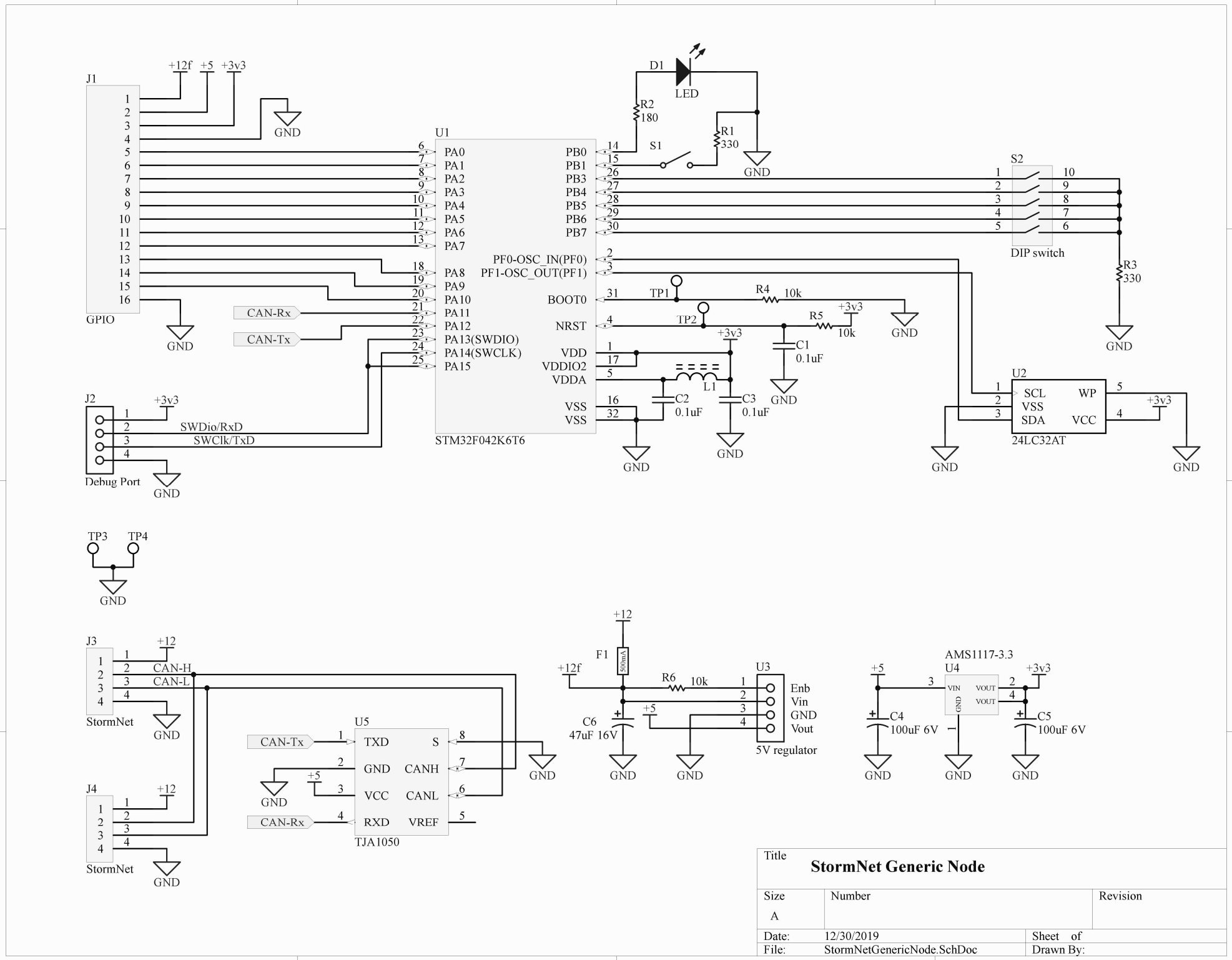

Title	StormNet Generic Node	
Size A	Number	Revision
Date: 12/30/2019		Sheet of
File: StormNetGenericNode.SchDoc		Drawn By: