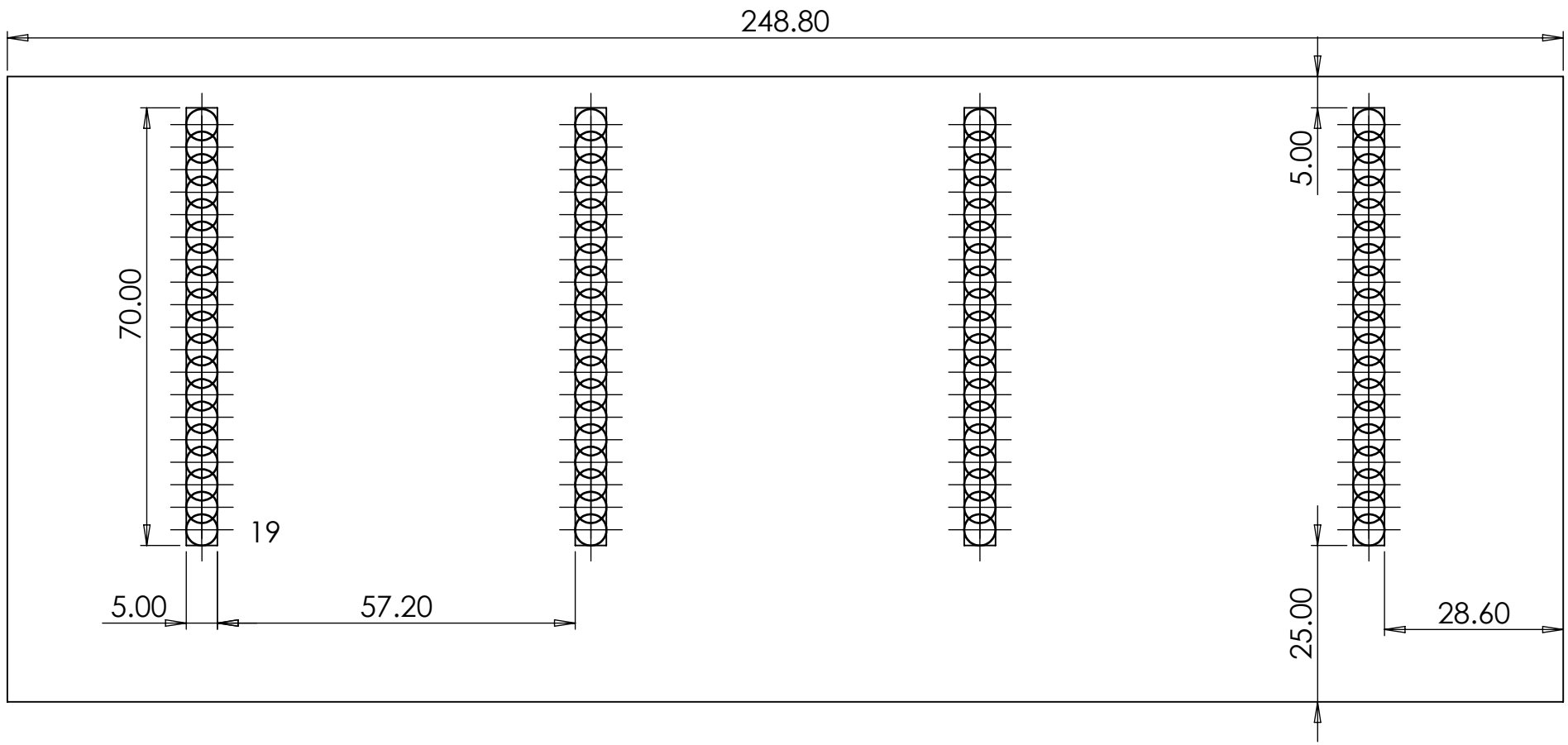

ELEVATION

UNLESS OTHERWISE SPECIFIED: DIMENSIONS ARE IN MILLIMETERS SURFACE FINISH: TOLERANCES: LINEAR: +/- 0.5 ANGULAR:	FINISH: NOT YET				DEBURR AND BREAK SHARP EDGES	DO NOT SCALE DRAWING / REVISION A
	NAME	SIGNATURE	DATE			TITLE:
DRAWN	LEON YIP		2/3/22			FIN SLOT TEMPLATE
CHK'D						
APPV'D						
MFG						
Q.A				MATERIAL: PHENOLIC		DWG NO. SA1 / A4
				WEIGHT:		SCALE: 1:1 / SHEET 1 OF 1

SOLIDWORKS Educational Product. For Instructional Use Only.