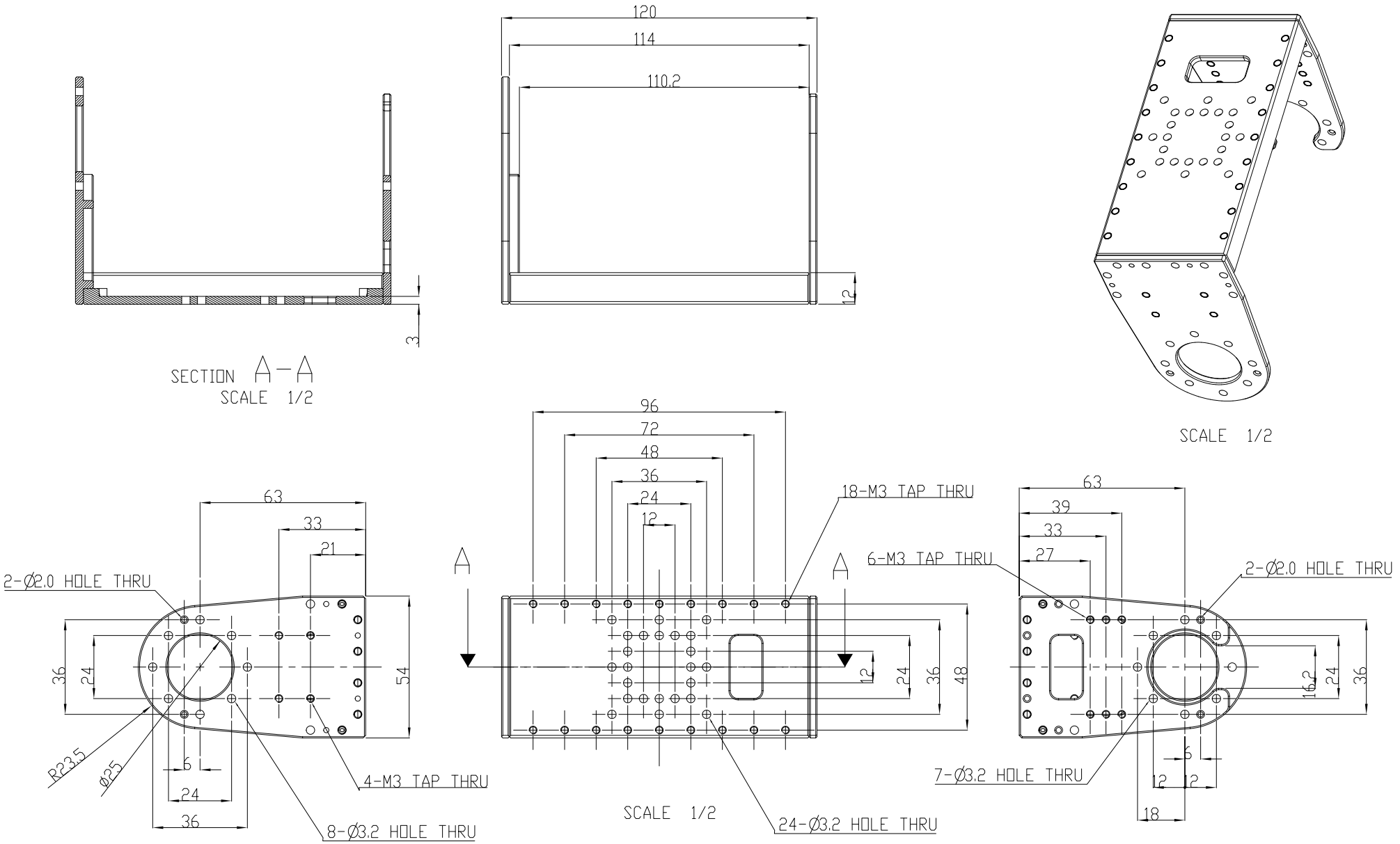

[FOR REFERENCE ONLY]

Title	Material	Scale	Unit	Sheet	
FRP54-H110	AL	NONSCALE	mm	1 of 1	ROBOTIS A4
Date 08/19/2013					