reset circuit (https://wilsonminesco.com/6502primer/RSTreqs.html)

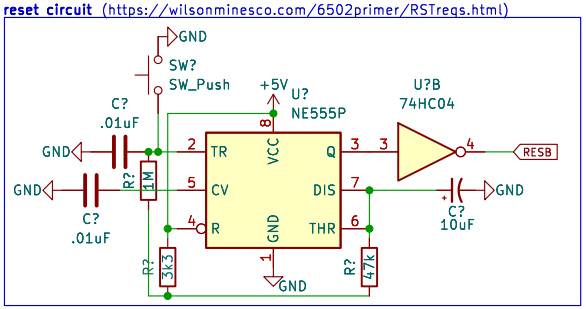

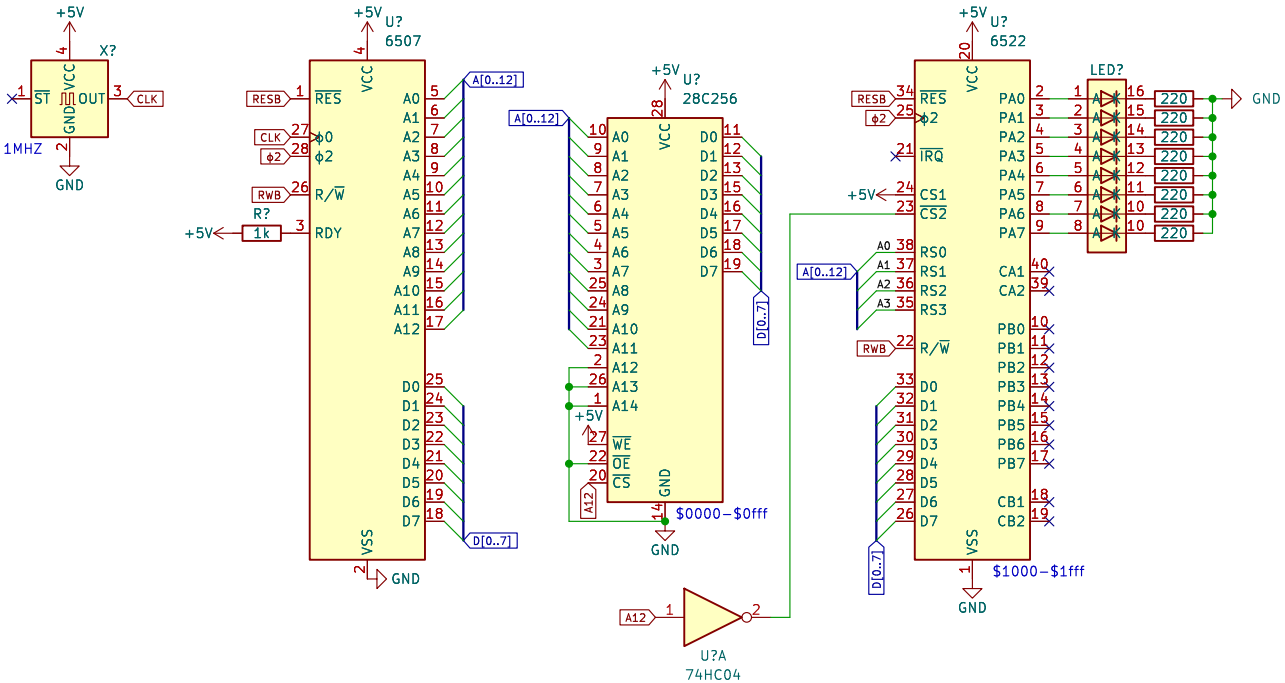

memory map:
$0000–>$0fff : ROM
$1000–>$1fff : 6522

6507 single board computer inspired by Ben Eater 6502 computer video series on YouTube.
Tie to GND all of the unused inverter inputs.

https://github.com/StringLess80/6507-SBC

Sheet: /
File: 6507.kicad_sch

Title: 6507 SBC

Size: A4	Date: 2023-08-30	**Rev: 1**
KiCad E.D.A. kicad 7.0.7		Id: 1/1