BIO-RAD MODEL 2550 EIA READER

INSTRUCTION MANUAL

87-0046 187

TABLE OF CONTENTS

SECTION 1: INTRODUCTION 1
1.1 Technical Specifications 1

SECTION 2: PRODUCT DESCRIPTION 4
2.1 Basic Unit 4
2.2 Operational Control Pad 5
2.3 Hard Copy Printout Formats 8
2.4 Block Diagram of Operation 9

SECTION 3: INITIAL START UP AND WARM UP PROCEDURE 10

SECTION 4: OPERATION 11
4.1 Blanking 11
4.2 Measurement in the Absorbance Mode 12
4.3 Measurement in the Matrix Mode 12

SECTION 5: PAPER ROLL INSTALLATION 14

SECTION 6: COMPUTER INTERFACING (OPTIONAL) 14

SECTION 7: TROUBLESHOOTING 17

SECTION 8: SCHEMATICS AND DOCUMENTATION 19

SECTION 1: INTRODUCTION

The Model 2550 EIA Reader is a vertical-pathlength photometer which measures the absorbances of the contents of 8 wells, one row, of a 96 well microtitration plate simultaneously. Using microprocessor and fiber optic technology, light is passed upward through the bottom of the microtitration plate, which acts as an optical window, then through the surface of the solution to a bank of eight photo-detectors. The Model 2550 EIA Reader has two measuring modes, absorbance mode and matrix mode. The absorbance mode provides a direct hard-copy printout of the absorbance values to three decimal places, identifying corresponding column and row positions on the printout. The absorbance mode can process readings up to at least 1.5 absorbance units with guaranteed linearity. The matrix mode lets you preselect an absorbance range, and automatically divide it into ten equal segments. The microprocessor assigns a value from 0-9 to each segment, and assay absorbance readings are cataloged into the appropriate range segment. All values are printed out in an 8 x 12 matrix that corresponds exactly to the layout of the 96 well microtitration plate. Absorbance values up to 2.9 absorbance units can be processed using the matrix mode.

The Model 2550 EIA Reader, together with the wide selection of high quality narrow bandwidth interference filters, provides the flexibility needed for performing enzyme-linked immunosorbent assays (ELISA), monoclonal antibody screening by ELISA, agglutination/haemagglutination assays, complement fixation, antibiotic sensitivity testing (MIC), protein determinations and several other assay procedures requiring colormetric measurement.

1.1 Technical Specifications*

1. Operating Modes.

   a. **Absorbance Mode** - a direct printout of absorbance to three decimal places identifying corresponding column and row positions.

   b. **Matrix Mode** - a numerical printout in the form of a 96 well microtitration plate (8 x 12 matrix). A pre-set range is divided into ten equal segments, numbered 0 to 9, and measured absorbance is represented on the printout by one of these numbers depending on the segment in which it lies.

2. Measurement Range.

   The linear range of the instrument is 0 to 1.5 absorbance units in the absorbance mode. In the matrix mode, it will process absorbance values up to a maximum of 2.9 absorbance units.

*Subject to change without notice.

3. Light Source.

   8V/50W Tungsten Halogen Lamp.

4. Wavelength Range.

   380 nm to 700 nm.

5. Wavelength Selection.

   By high quality interference filters.

Filter Wavelength (nm)	Bandwidth (nm)
380	10 max
405*	10 max
414*	10 max
450*	10 max
492*	10 max
600	10 max
700	10 max

*405, 414, 450 and 492 nm interference filters are supplied with the unit as standard equipment. All other filters are available as optional items.

6. Warm up Time.

   Fifteen (15) minutes.

7. Measurement Time.

   The microprocessor based system automatically reads a 96 well microtitration plate (8 x 12 format) in approximately 60 seconds, which includes a hard copy printout of the results.

   a. Without blanking.

      57 seconds from start to printout (typical measurement time).

   b. With blanking.

      62 seconds from blanking to printout (typical measurement time).

8. Stability (after 15 minute warm up).

   Drift $\leq$ 0.006 O.D./hour over eight hour period (typical).

9. Reproducibility (after 15 minute warm up).

   Less than or equal to $\pm$ 0.008 O.D. channel to channel (typical).

10. Line Voltages Available (two versions).

    a. 90-132 VAC, 50/60 Hz.

    b. 198-264 VAC, 50/60 Hz.

11. Power Consumption and AC Line Cord.

    100 VA and uses detachable, country specific, line cords.

12. Weight.

    8.5 kg

13. Size.

    40 cm (W) x 13 cm (H) x 30.5 cm (D).

14. Memory Protection for Blanking Function.

    Will retain blank value (zero value) for up to 48 hours after line power interruption.

15. Thermal Dot Matrix Printer.

    a. Width of paper: 60 mm

    b. Speed: 1.8 lines per second

    c. Two rolls of paper supplied as standard equipment

16. Computer Interfacing.

    Optional interfacing devices available:

    Serial Mode: RS-232-C

    Parallel Mode: IEEE-488

All Model 2550 EIA Readers are equipped with the required pin connector for their connection to the optional interface device. The device is then connected to the appropriate computer. Connection cables are optional.

SECTION 2: PRODUCT DESCRIPTION

2.1 Basic Unit

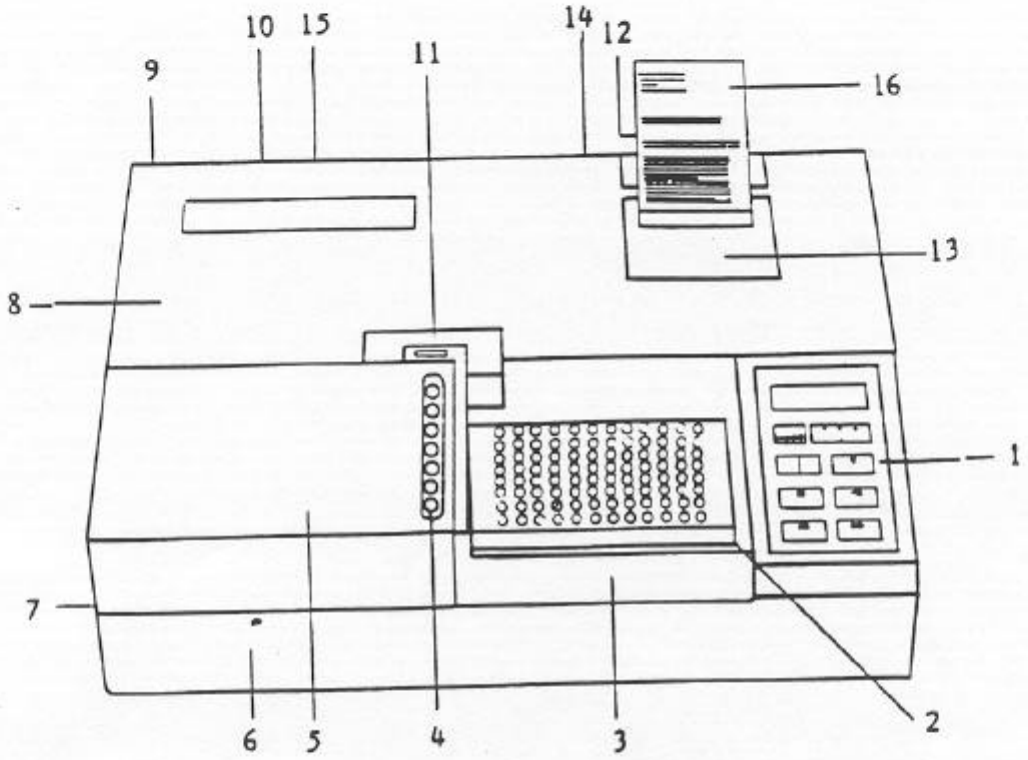

1. Operating Control Pad
2. Microtitration Plate Carrier
3. Stage
4. Photo Optic Detectors (Inside)
5. Photo Detector Cover
6. Unit Base Housing
7. ON/OFF Switch
8. Instrument Housing
9. Fuse
10. Cooling Fan Exhaust
11. Interference Filter
12. Paper Roll
13. Dot Matrix Printer
14. Computer Interface Socket
15. AC Power Cord
16. Hard Copy Printout

2.2 Operational Control Pad

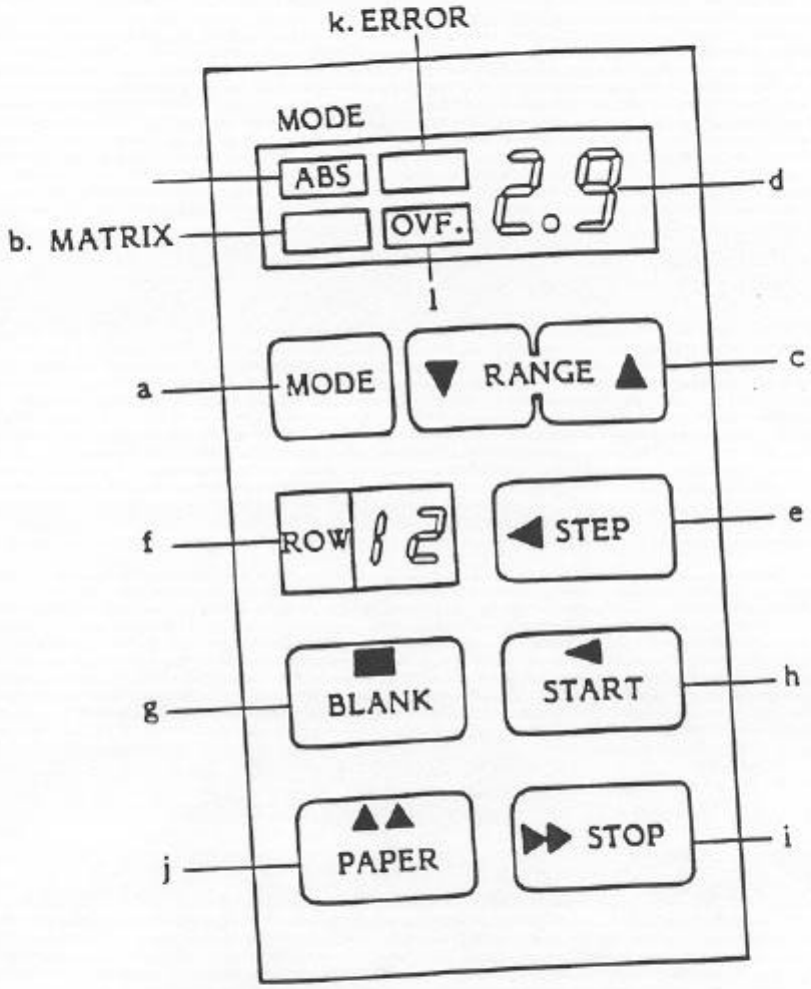

(a)	MODE	Selection of absorbance or matrix modes. Push once to change to another mode.
(b)	ABS MATRIX	Operating mode indicators. One of the two is illuminated.
(c)	▼ RANGE ▲	Used in the matrix mode to set desired range (0.0 to 2.9). ▲: Increase ▼: Decrease By touching the appropriate "▼", range values increase (decrease) by 0.1 unit. If you hold the appropriate "▼" down for over 1.5 seconds, range values increase (decrease) 0.1 unit every 0.2 seconds.
(d)	RANGE	LED indicator for matrix mode operation. Can be set from 0.0 to 2.9.
(e)	◄ STEP	Advances the microtitration plate one row at a time.
(f)	◄ ROW 12	LED indicators of row number. Indicates the row number on the microtitration plate which is positioned under the eight photo detectors.
(g)	■ BLANK	Blanking start. Provides assay zero value. All other readings will be compared to the average absorbance of this row.
(h)	▲ START	Push to begin the optical reading cycle automatically.
(i)	► STOP	Stops all operating functions and returns the microtitration plate to its initial position.
(j)	▲▲ PAPER	Paper advance. Use to load a new paper roll or to advance paper as necessary.

(k) ERROR

Illuminates under the following conditions:

1. Blanking procedure is not successful.
2. Blanking values are too high.
3. Start is pushed before blanking is complete.
4. Matrix mode selected and range equals 0.0.
5. Start is pushed and microtitration plate is not properly located in carrier.
6. Absorbance is too high.

(l) OVF.

Illuminates when measured value of the absorbance range exceeds the set value in the matrix mode or exceeds 1.5 AU in absorbance mode.

2.3 Hard Copy Printout Formats

A. * means absorbance overflow, i.e., absorbance measured is too high.

B. Printed values greater than 2.999, when using the absorbance mode, indicate that absorbance values are less than the blank. For example:

9.996 means that the sample had an absorbance of 0.004 units less than the blank. Remember, the blank is the numerical average of eight readings (one row).

```
BLANKING:COMPLETED
ROW NO.01
A B C D E F G H
0 0 0 0 0 0 0 0

MODE : ABSORBANCE

ROW.  1      2      3

A 0.001 0.[illegible] 0.[illegible]
B 0.000 0.[illegible] 0.[illegible]
C 0.[illegible] 0.441 0.[illegible]
D 0.[illegible] 0.[illegible] 0.461
E 0.[illegible] 0.[illegible] 0.[illegible]
F 0.[illegible] 0.[illegible] 0.470
G 0.000 0.[illegible] 0.[illegible]
H 0.000 0.[illegible] 0.464

ROW.  4      5      6

A 0.[illegible] 0.[illegible] 0.[illegible]
B 0.[illegible] 0.[illegible] 0.[illegible]
C 0.[illegible] 0.[illegible] 0.[illegible]
D 0.[illegible] 0.[illegible] 0.461
E 0.[illegible] 0.[illegible] 0.[illegible]
F 0.466 0.[illegible] 0.467
G 0.[illegible] 0.[illegible] 0.[illegible]
H 0.[illegible] 0.[illegible] 0.[illegible]

ROW.  7      8      9

A 0.[illegible] [illegible] [illegible]
B 0.[illegible] [illegible] [illegible]
C 0.[illegible] [illegible] 1.611
D 0.[illegible] [illegible] [illegible]
E 0.[illegible] [illegible] [illegible]
F 0.[illegible] [illegible] [illegible]
G 0.[illegible] [illegible] [illegible]
H 0.467 [illegible] [illegible]

ROW. 10     11     12

A [illegible] [illegible] [illegible]
B [illegible] [illegible] [illegible]
C [illegible] [illegible] [illegible]
D [illegible] [illegible] [illegible]
E [illegible] [illegible] 1.611
F 1.597 [illegible] 1.597
G [illegible] [illegible] 1.604
H 1.647 [illegible] 1.621
```

```
MODE : [illegible]
RANG : [illegible]

[illegible]

A [illegible]
B [illegible]
C [illegible]
D [illegible]
E [illegible]
F [illegible]
G [illegible]
H [illegible]
```

2.4 Block Diagram of Operation

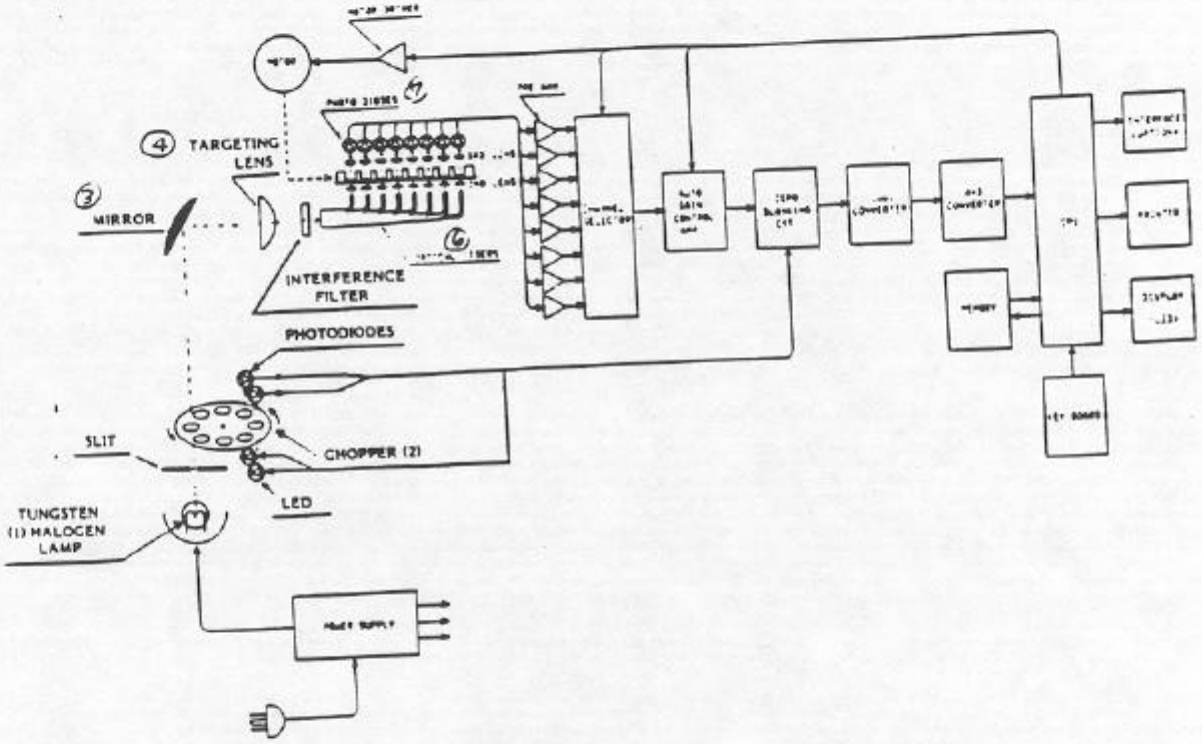

1. The light source is a tungsten halogen lamp, equipped with an aluminum-coated elliptic reflector. The lamp supplied with the Model 2550 EIA Reader has been evaluated for emission energy intensity over the wavelength range from 380 nm to 700 nm. The lamp supplied was judged superior in performance over this wavelength range. The recommended replacement lamp is Bio-Rad Catalog No. 170-6574.

2. Light emitted from the lamp is then chopped by a chopper wheel. This increases the intensity of the beam and also sends light pulses to the unit's zero blanking system.

3. After being chopped, the light meets a special mirror. This mirror helps to reduce heating of the interference filter. It also helps to normalize the spectral intensity.

4. The light is then reflected through the targeting lens which focuses and makes the beam parallel.

5. The narrow bandwidth interference filter selects the appropriate wavelengths.

NOTE

If measurement is desired at 380 nm and if the sample will have an absorbance of greater than 1.000 AU, it is recommended that the 380 nm special bandwidth interference filter be used (Bio-Rad Catalog No. 170-6562).

6. After passing through the filter, the light beam contacts the common end of the fiber optic bundle. The beam is then split into eight parallel beams and directed upwards through the bottom of the microtitration plate.

7. Prior to entering/exiting the microtitration plate/solution, the beams are focused and then refocused before contacting the eight photo detectors.

SECTION 3: INITIAL START UP AND WARM UP PROCEDURE

1. Place the instrument on a clean, sturdy table or bench. It is important to maintain the instrument in a clean, relatively dust free environment to insure maximum performance.

2. Inspect the outside of the unit for any signs of damage. If damage is found, contact your nearest Bio-Rad Representative.

3. Complete Warranty Registration card and mail.

4. Insert the power cord into the socket on the back of the instrument.

5. Before connecting the instrument to the main electrical supply, check that the AC voltage is appropriate for the instrument.

6. Place the appropriate interference filter in position.

NOTE

The interference filter must be positioned with the mirror side facing the light source (the text printed on the body of the filter will read from left to right).

7. Turn on the power switch.

8. Allow the instrument to warm up for 15 minutes to establish necessary thermal equilbrium of the various components.

9. After warm up, insert paper roll as described in Section 5.

SECTION 4: OPERATION

4.1 Blanking

1. Place a microtitration plate into the plate carrier so that Row No. 1 enters the optical measuring system first.

2. Press [■ BLANK]. The microtitration plate will automatically be drawn into the instrument and stop at Row No. 1 for assay blank determination. The row number being measured is indicated by the row position indicator [ROW | 1].

NOTE

The instrument measures the absorbance in all eight (8) wells simultaneously in the row designated as blank. It then automatically calculates the mean absorbance value for these eight wells and stores this value in its memory. Subsequent measurement of all 96 wells of the microtitration plate are then corrected using this blank value and reported via hard copy printout.

3. After blank is completed, press [◄START] to read all 96 wells of the microtitration plate and obtain hard copy printout of results.

NOTE

Blanking will not be successful in the following cases:

1. Interference filter is not properly inserted.
2. Lamp is not functioning.
3. Absorbance values used for generation of blank value are too high.

When blanking is not successful [ERROR] illuminates.

4. If blanking the instrument on a row other than row 1 is desired, press ◄STEP to advance the plate one row at a time until the desired row is reached. The number of the row which is positioned under the eight photo detectors is indicated by the row position indicator [ROW | 2]. After the correct row is positioned under the photo detectors, press BLANK to blank the instrument. Then press ◄START to read the microtitration plate beginning at the row selected as blank. If reading all 96 wells is desired, after blanking at the desired row number, press ►STOP and after the microtitration plate has been returned to its initial position, press ◄START . All 96 wells will automatically be read and a hard copy printout of the results will be provided.

4.2 Measurement in the Absorbance Mode

1. Place a microtitration plate into the plate carrier so that row number 1 enters the optical measuring system first.
2. Select absorbance mode by pressing [MODE] to illuminate [ABS].
3. Press [BLANK]. Refer to Section 4.1 for further information regarding blanking procedure.
4. After blanking procedure is completed, press [◄START]. The microtitration plate will automatically advance and the results will be provided via hard copy printout.
5. Use [◄STEP] to move plate to desired row number, if commencement of plate reading at row number 1 is not desired.

4.3 Measurement in the Matrix Mode

1. Place a microtitration plate into the plate carrier so that row number 1 enters the optical measuring system first.
2. Select matrix mode by pressing [MODE] to illuminate [MATRIX].

3. Select appropriate absorbance range (0.1 to 2.9) by pressing RANGE. The desired absorbance will appear in the LED indicator.

NOTE

This instrument divides the set range value into ten equal segments. The measured absorbance values are then classified according to these range segments. For example, if the RANGE is set to equal 2.0, the following is performed:

Range Segment	Measured Absorbance Value in Range	Resulting Hard Copy Printout
1	0.000 - 0.200	0
2	0.201 - 0.400	1
3	0.401 - 0.600	2
4	0.601 - 0.800	3
5	0.801 - 1.000	4
6	1.001 - 1.200	5
7	1.201 - 1.400	6
8	1.401 - 1.600	7
9	1.601 - 1.800	8
10	1.801 - 2.000	9

The results are printed out in the format of a microtitration plate.

4. Press BLANK. Refer to Section 4.1 for further information regarding blanking procedure.

NOTE

Range must be set to some value other than 0.0 or ERROR will illuminate and all functions will stop. Press STOP to reset instrument.

5. After the blanking procedure is completed, press [◄START]. The microtitration plate will automatically advance with the results being printed out by the hard copy printer.

6. Use STEP to move the plate to other row number, if commencement of plate reading at row number 1 is not desired.

SECTION 5: PAPER ROLL INSTALLATION

1. Turn on power switch.

2. Press [►STOP]. Wait until plate carrier is returned to its initial position.

3. Remove the old paper roll from the support guides at the rear of the instrument and remove the roll from the plastic spool. Discard old paper roll.

4. Place a new roll of paper on plastic spool.

5. Insert the free end of the new paper roll into the slot at the rear of the printer until it will go no further.

6. Keeping tension on the inserted paper, press [▲▲ PAPER] until the paper is fed through the printer.

7. Slide the plastic spool with the new paper roll into the guides at the rear of the instrument.

8. Tear off excess paper.

9. The instrument is now ready to operate.

SECTION 6: COMPUTER INTERFACING (OPTIONAL)

The Bio-Rad Model 2550 EIA Reader can be interfaced with various computers via two optional interfacing devices.

1. Serial Interface Device Model (RS-232-C)

Bio-Rad Catalog Numbers 170-6569 and 170-6570

This interface sends data as an 8-bit ASC II code in a serial asynchronous mode.

8 Bit Word
1 Stop Bit
1 Start Bit
No Parity
600 Baud

Interface is configured as DCE with standard DB 25 female connector. Standard pinout sequence.

Pinout	Description
1.	Frame Ground
2.	Transmit Data (TXD)
3.	Receive Data (RXD)
4.	Request to Send (RTS)
5.	Clear to Send (CTS)
6.	Data Set Ready (DSR)
7.	Signal Ground
8.	Data Terminal Ready (DTR)
19.	Secondary Clear to Send (SCTS)
20.	Data Carrier Detect (DCD)

Pinouts 9-18 and 21-25 have no connection.

2. Parallel Interface Device Model GPIB IEEE-488

Bio-Rad Catalog Numbers 170-6571 and 170-6572

The formal name for this type of bus is "IEEE Standard Digital Interface for Programmable Instrumentation, 1978." The complete document, IEEE Standard 488-1978, may be obtained from the Institute of Electrical and Electronic Engineers, Inc. The instrument bus in also known as the "IEEE-488 Interface Bus," the "General Purpose Interface Bus" (GPIB) or the "Hewlett-Packard Interface Bus" (HP-IB®). You will not need to use the IEEE Standard 488 documentation unless you need actual design information for the construction of an interface device.

Data Rates

The GPIB is a parallel bus which transmits eight-bit bytes of data at high data rates. The GPIB can also transmit blocks of commands or data, one byte at a time. Block transmission allows rapid transfer of data with a minimum number of time-consuming handshake and control functions. In other words, control overhead is at a minimum. The average block size sent by a typical instrument is 13 bytes. A printer or disk drive is able to send or receive an entire line or sector in a single block.

The typical data rate for instruments on the bus in about one to two kilobytes per second. The operation of the GPIB is most efficient, and program overhead is minimized if all of the devices on the bus have buffered inputs.

3. Disabeling the EIA Reader's Dot Matrix Printer

When the EIA Reader is connected to a computer via the RS-232-C or IEEE-488 interface devices, you can deactivate the EIA Reader's dot matrix printer as follows:

a. While pressing RANGE , turn ON the instrument's power switch.

b. The EIA Reader will respond by printing "Printer Deactivated."

c. The only time the EIA Reader's printer will now respond is when you press BLANK . It will tell you if blanking was successful. If blanking was unsuccessful, do not proceed. Refere to Section 7 for assistance.

To reactivate the EIA Reader's printer:

a. Turn the instrument's power switch OFF.

b. Wait 15 seconds, and turn the instrument's power switch ON.

When the EIA Reader's printer is deactivated, plate reading time is redued to approximately 30 seconds.

SECTION 7: TROUBLESHOOTING

The EIA Reader is equipped with a self diagnostic system. To activate the self diagnostic function:

a. While pressing BLANK , turn the instrument's power switch ON.

b. The following printout will appear is all parameters are functioning properly.

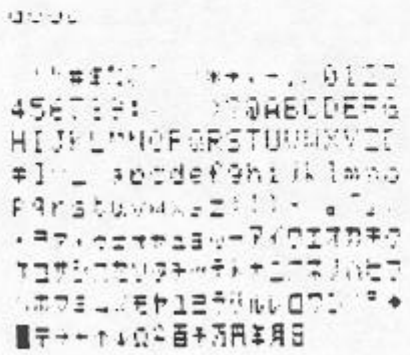

c. After the self diagnostic check is completed, turn the instrument's power switch OFF.

d. Wait 15 seconds before turning the instrument on. After this period, the instrument will be ready for normal operation.

Should the printout not appear as shown, contact your local Bio-Rad representative for assistance.

TROUBLESHOOTING GUIDE

CONDITION	CAUSE	REMEDY
1. With power switch on, the lamp does not light and the fan is not activated.	a. The power cord is not connected correctly.	a. Check power cord connection.
	b. The fuse has blown.	b. Replace fuse.
2. With power switch on, the lamp does not light, but the fan is activated.	a. Lamp has worn out.	a. Replace lamp.
3. Value printed out are unstable.	a. Connected to same outlet as another electrical apparatus.	a. Connect the separate outlet.
	b. Instrument not warmed up.	b. Follow warm up procedu in Section 3.
4. Error light is illuminated and instrument will not function.	a. Instrument is incorrectly programmed.	a. Reprogram instrument. Press STOP and re-program.
	b. Filter is incorrectly inserted.	b. Correctly install interference filter.
	c. Microtitration plate is incorrectly installed.	c. Correctly install microtitration plate.
	d. Blanking procedure is not successful.	d. Review Section 4.1.
	e. Start is pushed before blanking is complete.	e. Allow blanking to be completed.
	f. Matrix mode selected and range equals 0.0.	f. Set range to value between 0.1 and 2.9 in Matrix mode.
	g. Absorbance of blank is too high.	g. Dilute blank.
5. The instrument does not function.	a. There may be an abnormality inside the instrument.	a. Turn off the instrumen and contact Bio-Rad Laboratories or our ag

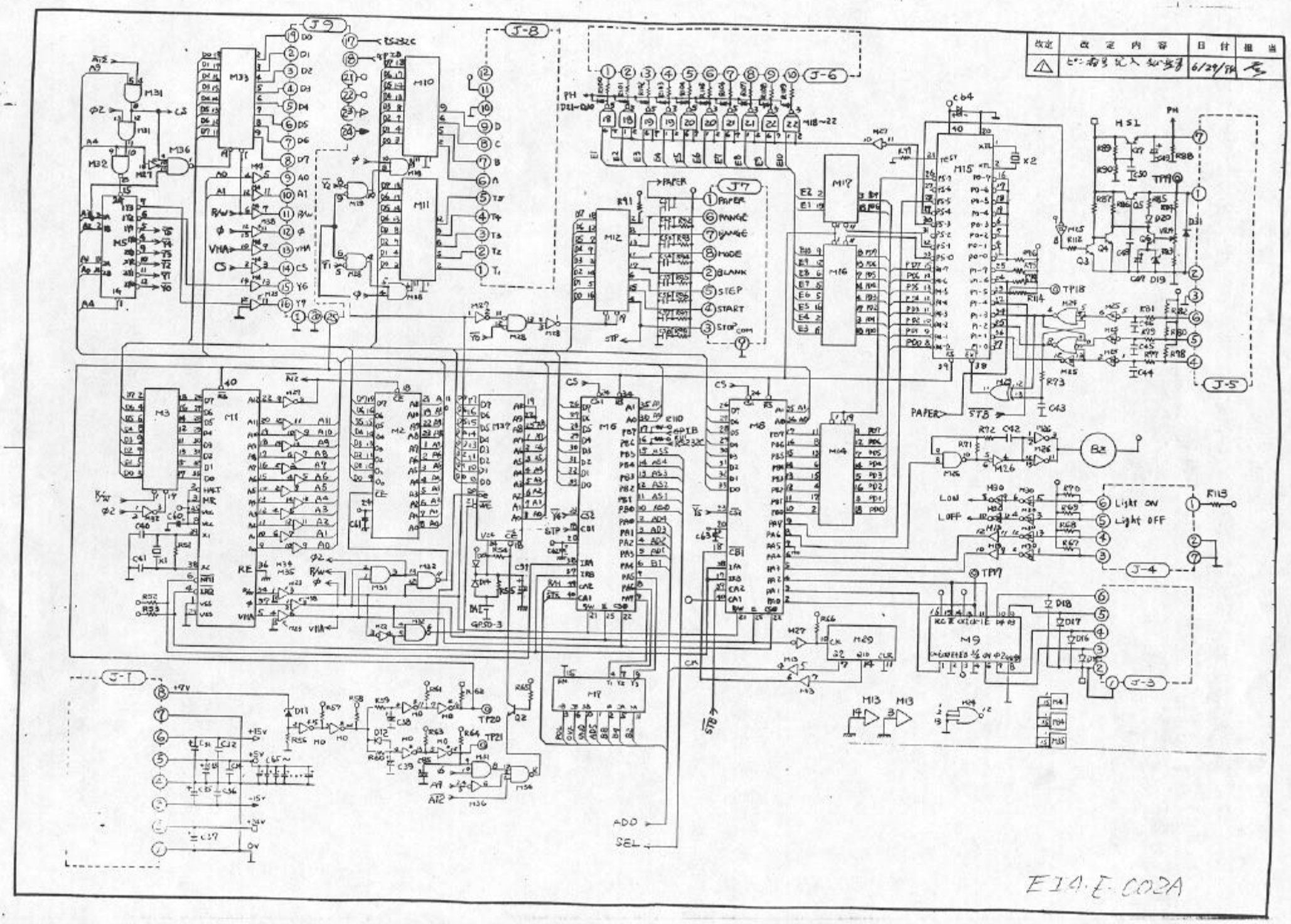
改定
改定内容
日付
担当
6/29/94
J-9
J-8
J-6
J-7
J-5
J-4
J-3
J-1
RS232C
PAPER
RANGE
MODE
BLANK
STEP
START
STOP
COM
Light ON
Light OFF
ADD
SEL
E14-E-C02A

改定	改定内容	日付	担当
△	[illegible]に入	6/29/84	[illegible]

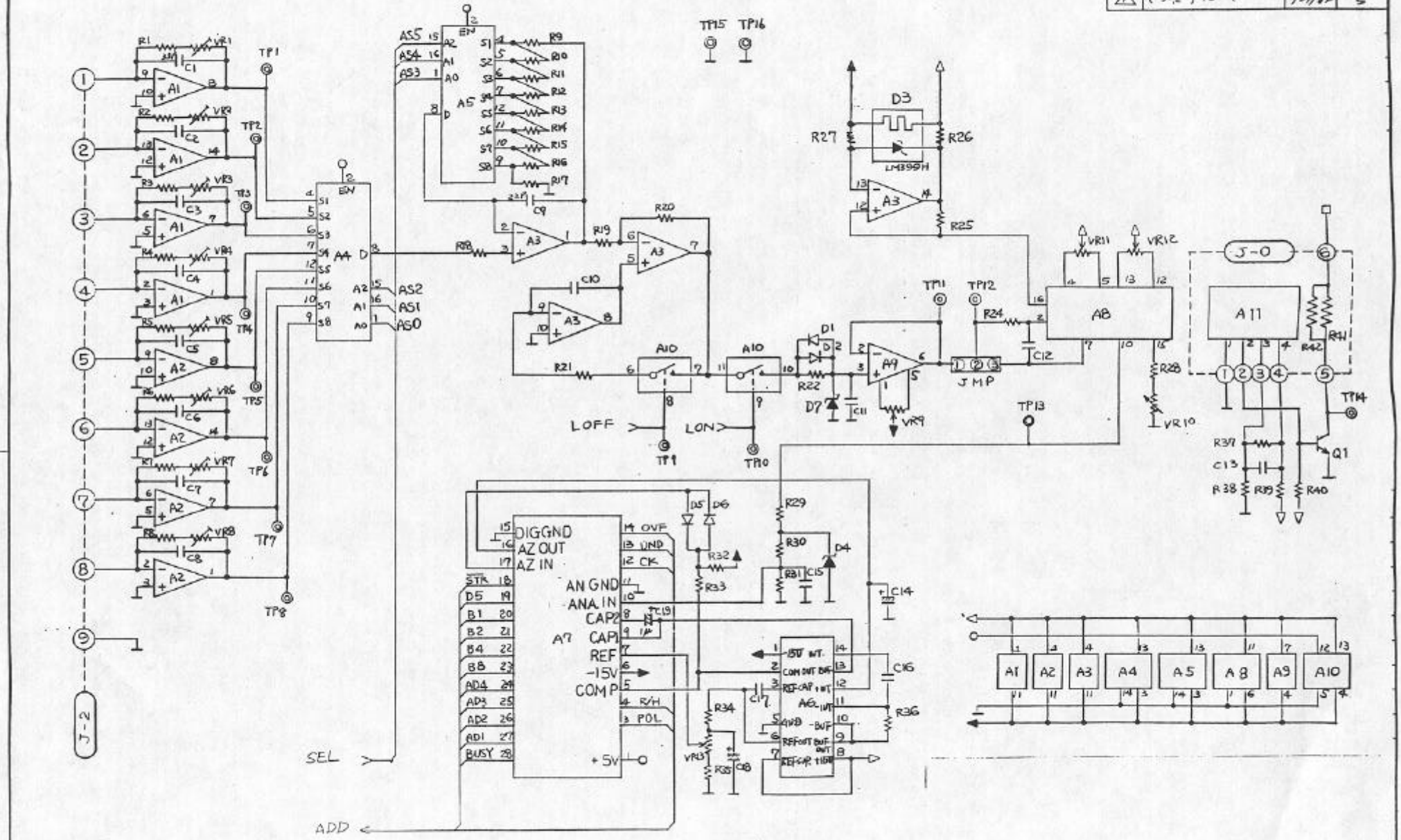

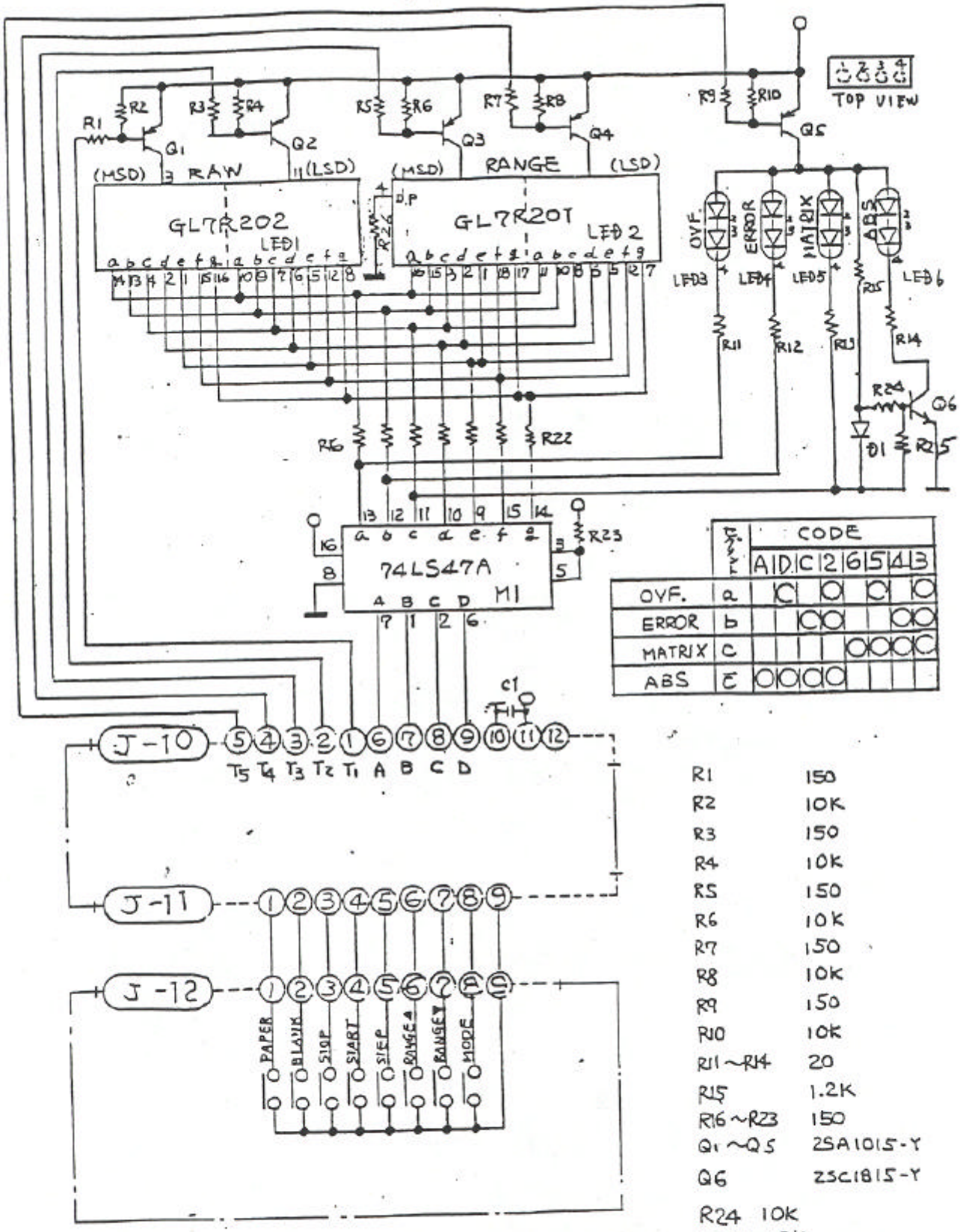

		CODE						
		A	D	C	2	6	5	4	3
OVF.	a		○		○		○		○
ERROR	b			○	○			○	○
MATRIX	c					○	○	○	○
ABS	e	○	○	○	○				

R1	150
R2	10K
R3	150
R4	10K
R5	150
R6	10K
R7	150
R8	10K
R9	150
R10	10K
R11 ~ R14	20
R15	1.2K
R16 ~ R23	150
Q1 ~ Q5	2SA1015-Y
Q6	2SC1815-Y
R24	10K
R25	10K
R26	150
J12	FH-8N-2.54DSA

EIA-E-003A

改定	改 定 内 容	日 付	担 当
△			

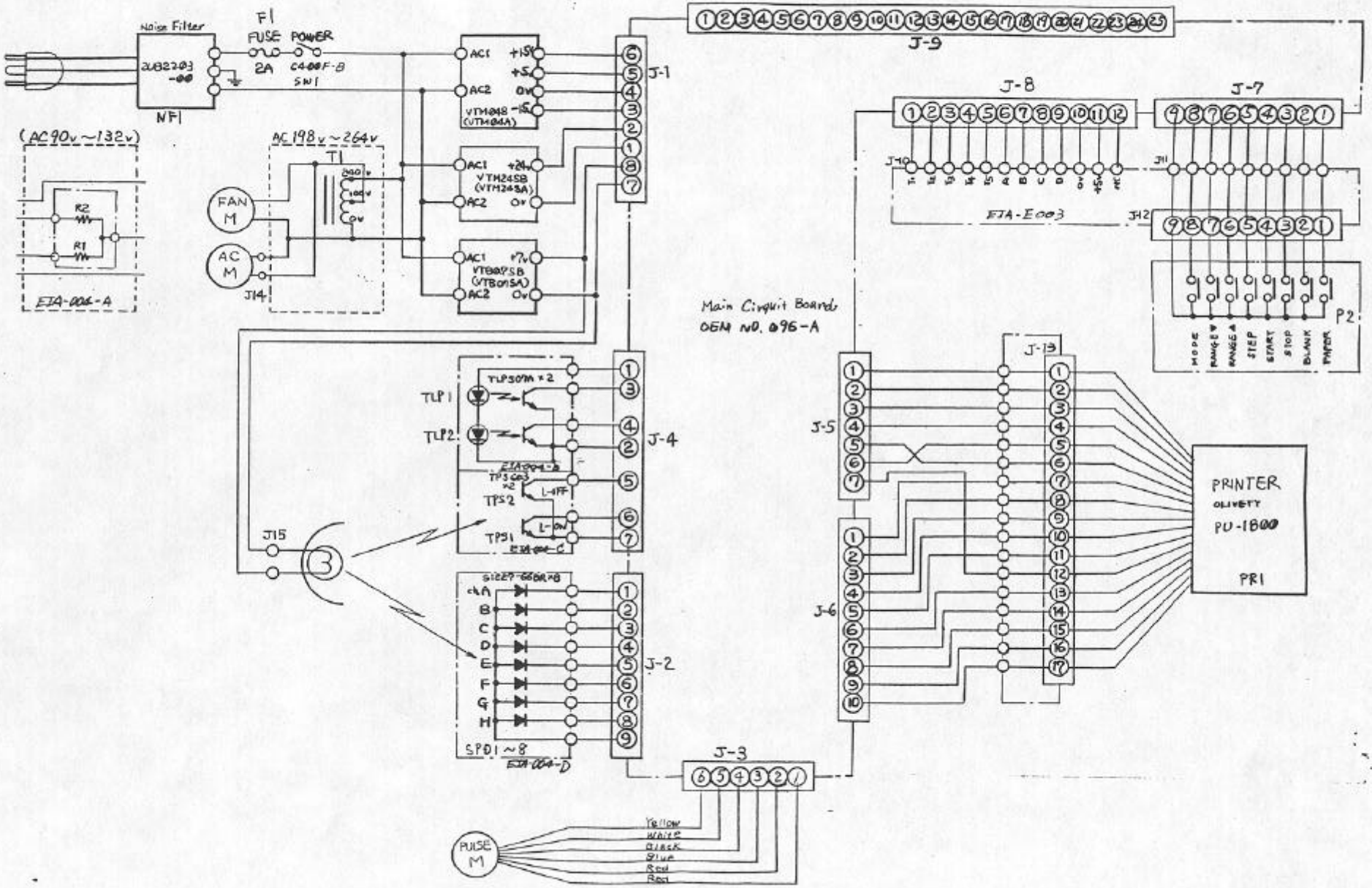

EJA-E004A

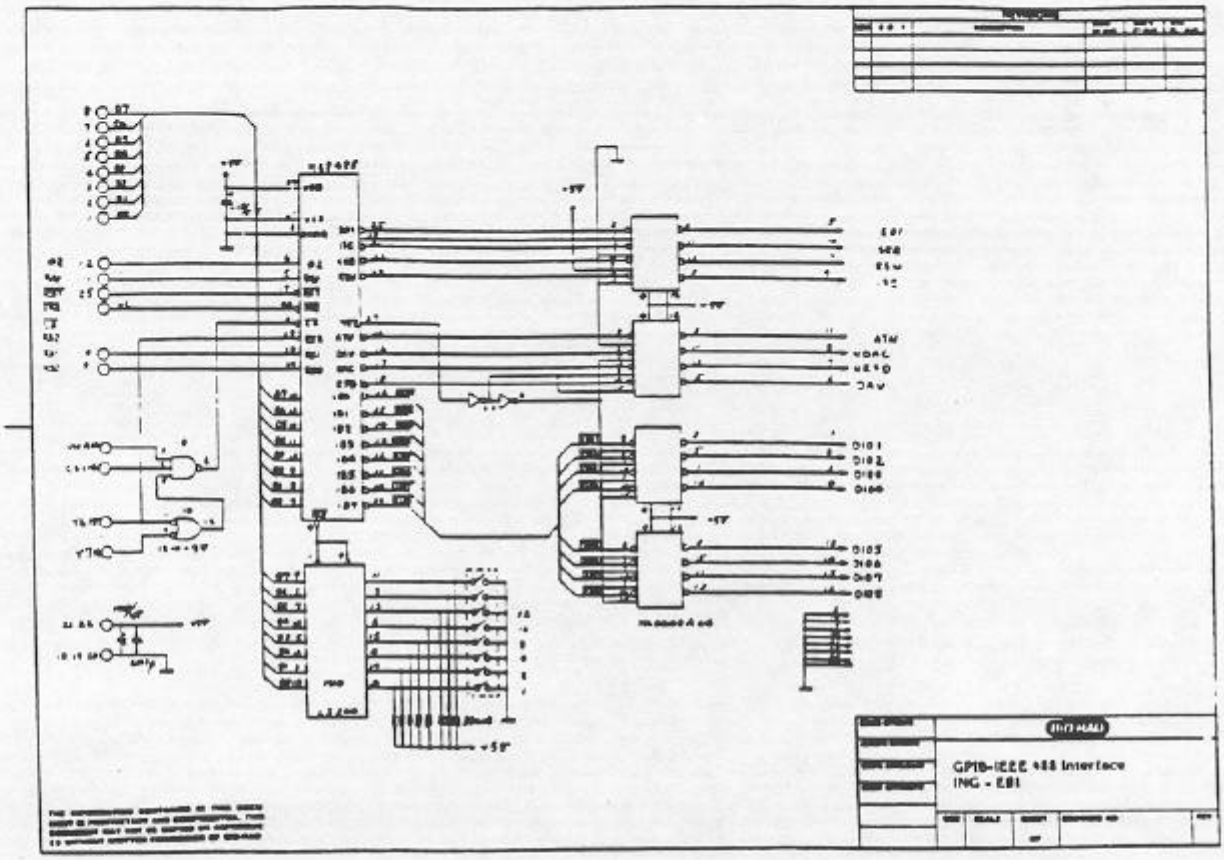
GPIB-IEEE 488 Interface
ING - E81

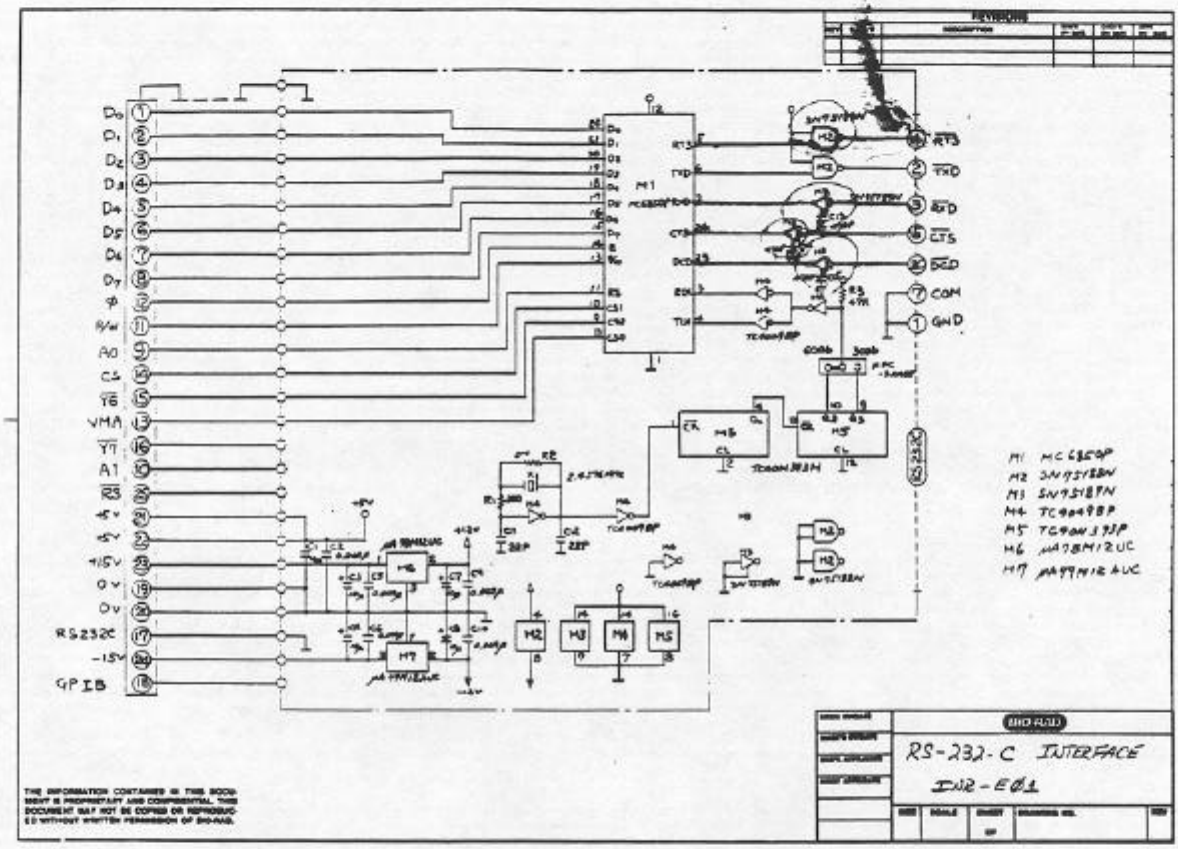
RS-232-C INTERFACE
IN2-E01
M1 MC6850P
M2 SN75188N
M3 SN75189N
M4 TC4049BP
M5 TC4013BP
M6 μA78M12UC
M7 μA79M12UC
RS232C
GPIB

E I A R E A D E R Model 2550 Interface Output Format

```
MSB     LSB

1000**** -MSD
1000****          These Row data is
1000****          BCD code numbers.
1000**** -LSD

1000#### -MSD
1000####          These Blank data is
1000####          Binary code numbers
1000#### -LSD     of 9's Complement.
```

Example

```
                DATA BYTE
          b7 b6 b5 b4 b3 b2 b1 b0

          11001101     M
          11001111     O
MODE:     11000100     D
          11000101     E
          10111010     :
          11000001     A
          11000010     B
          11010011     S
ABSORBANCE 11001111    O
(or MATRIX) 11010010   R
          11000010     B
          11000001     A
          11001110     N
          11000011     C
          11000101     E
          10001101     CR
          11010010     R
          11000001     A
RANGE:    11001110     N
          11000111     G
          11000101     E
          10111010     :
          1011****     Range number MSD
Range number 10101110  .
          1011****     Range number LSD
          10001101     CR
```

Starting Row number	1000****	MSD-	Starting Row number
	1000****	LSD-	
Blank data	1000####	MSD-	
	1000####		Ch.A Blank data
	1000####		(9's Complement)
	1000####	LSD-	
	1000####	MSD-	
	1000####		Ch.B Blank data
	1000####		(9's Complement)
	1000####	LSD-	
	1000####	MSD-	
	1000####		Ch.C Blank data
	1000####		(9's Complement)
	1000####	LSD-	
	1000####	MSD-	
	1000####		Ch.D Blank data
	1000####		(9's Complement)
	1000####	LSD-	
	1000####	MSD-	
	1000####		Ch.E Blank data
	1000####		(9's Complement)
	1000####	LSD-	
	1000####	MSD-	
	1000####		Ch.F Blank data
	1000####		(9's Complement)
	1000####	LSD-	
	1000####	MSD-	
	1000####		Ch.G Blank data
	1000####		(9's Complement)
	1000####	LSD-	
	1000####	MSD-	
	1000####		Ch.H Blank data
	1000####		(9's Complement)
	1000####	LSD-	
Row Data	1000****	MSD-	
	1000****		Row N
	1000****		Ch.A data
	1000****	LSD-	
	1000****	MSD-	
	1000****		Row N
	1000****		Ch.B data
	1000****	LSD-	
	1000****	MSD-	
	1000****		Row N
	1000****		Ch.C data
	1000****	LSD-	
	1000****	MSD-	
	1000****		Row N
	1000****		Ch.D data
	1000****	LSD-	
	1000****	MSD-	
	1000****		Row N
	1000****		Ch.E data
	1000****	LSD-	
	1000****	MSD-	
	1000****		Row N
	1000****		Ch.F data
	1000****	LSD-	

```
1000****    MSD-
1000****          Row N
1000****          Ch.G data
1000****    LSD-
1000****    MSD-
1000****          Row N
1000****          Ch.H data
1000****    LSD-
1000****    MSD-
1000****          Row N+1
1000****          Ch.A data
1000****    LSD-
1000****    MSD-
1000****          Row N+1
1000****          Ch.B data
1000****    LSD-
1000****    MSD-
1000****          Row N+1
1000****          Ch.C data
1000****    LSD-
1000****    MSD-
1000****          Row N+1
1000****          Ch.D data
1000****    LSD-
1000****    MSD-
1000****          Row N+1
1000****          Ch.E data
1000****    LSD-
1000****    MSD-
1000****          Row N+1
1000****          Ch.F data
1000****    LSD-
1000****    MSD-
1000****          Row N+1
1000****          Ch.G data
1000****    LSD-
1000****    MSD-
1000****          Row N+1
1000****          Ch.H data
1000****    LSD-
1000****    MSD-
1000****          Row N+2
1000****          Ch.A data
1000****    LSD-
1000****    MSD-
1000****          Row N+2
1000****          Ch.B data
1000****    LSD-
1000****    MSD-
1000****          Row N+2
1000****          Ch.C data
1000****    LSD-
1000****    MSD-
1000****          Row N+2
1000****          Ch.D data
1000****    LSD-
1000****    MSD-
1000****          Row N+2
```

```
1000****            Ch.E data
1000****     LSD-
1000****     MSD-
1000****            Row N+2
1000****            Ch.F data
1000****     LSD-
1000****     MSD-
1000****            Row N+2
1000****            Ch.G data
1000****     LSD-
1000****     MSD-
1000****            Row N+2
1000****            Ch.H data
1000****     LSD-
1000****     MSD-
1000****            Row N+3
1000****            Ch.A data
1000****     LSD-
1000****     MSD-
1000****            Row N+3
1000****            Ch.B data
1000****     LSD-
1000****     LSD-
1000****            Row N+3
1000****            Ch.C data
1000****     LSD-
     "
     "
     "
     "
     "
     "
1000****     MSD-
1000****            Row 10
1000****            Ch.F data
1000****     LSD-
1000****     MSD-
1000****            Row 10
1000****            Ch.G data
1000****     LSD-
1000****     MSD-
1000****            Row 10
1000****            Ch.H data
1000****     LSD-
1000****     MSD-
1000****            Row 11
1000****            Ch.A data
1000****     LSD-
1000****     MSD-
1000****            Row 11
1000****            Ch.B data
1000****     LSD-
1000****     MSD-
1000****            Row 11
1000****            Ch.C data
1000****     LSD-
1000****     MSD-
1000****            Row 11
```

```
1000****          Ch.D data
1000****    LSD-
1000****    MSD-
1000****          Row 11
1000****          Ch.E data
1000****    LSD-
1000****    MSD-
1000****          Row 11
1000****          Ch.F data
1000****    LSD-
1000****    MSD-
1000****          Row 11
1000****          Ch.G data
1000****    LSD-
1000****    MSD-
1000****          Row 11
1000****          Ch.H data
1000****    LSD-
1000****    MSD-
1000****          Row 12
1000****          Ch.A data
1000****    LSD-
1000****    MSD-
1000****          Row 12
1000****          Ch.B data
1000****    LSD-
1000****    MSD-
1000****          Row 12
1000****          Ch.C data
1000****    LSD-
1000****    MSD-
1000****          Row 12
1000****          Ch.D data
1000****    LSD-
1000****    MSD-
1000****          Row 12
1000****          Ch.E data
1000****    LSD-
1000****    MSD-
1000****          Row 12
1000****          Ch.F data
1000****    LSD-
1000****    MSD-
1000****          Row 12
1000****          Ch.G data
1000****    LSD-
1000****    MSD-
1000****          Row 12
1000****          Ch.H data
1000****    LSD-
```