US 20250260712A1

(19) United States
(12) Patent Application Publication
Hong et al.
(10) Pub. No.: US 2025/0260712 A1
(43) Pub. Date: Aug. 14, 2025

(54) **USER BASED THREAT RESPONSE RECOMMENDATIONS**

(71) Applicant: **Cisco Technology, Inc.**, San Jose, CA (US)

(72) Inventors: **Yi Hong**, Foster City, CA (US); **Tian Bu**, Basking Ridge, NJ (US)

(21) Appl. No.: **18/438,962**

(22) Filed: **Feb. 12, 2024**

Publication Classification

(51) **Int. Cl.**
H04L 9/40 (2022.01)

(52) **U.S. Cl.**
CPC ***H04L 63/1441*** (2013.01); ***H04L 63/1416*** (2013.01)

(57) **ABSTRACT**

Techniques described herein can generate customized, user-based security response recommendations for users of security system(s), such as for security analysts tasked with performing responses to computing security threats. A user-based response recommendation engine can generate the user-based security response recommendations based on incident data associated with security incidents and based on historical user response data. Furthermore, user role inference techniques can optionally be used in conjunction with the user-based response recommendation engine.

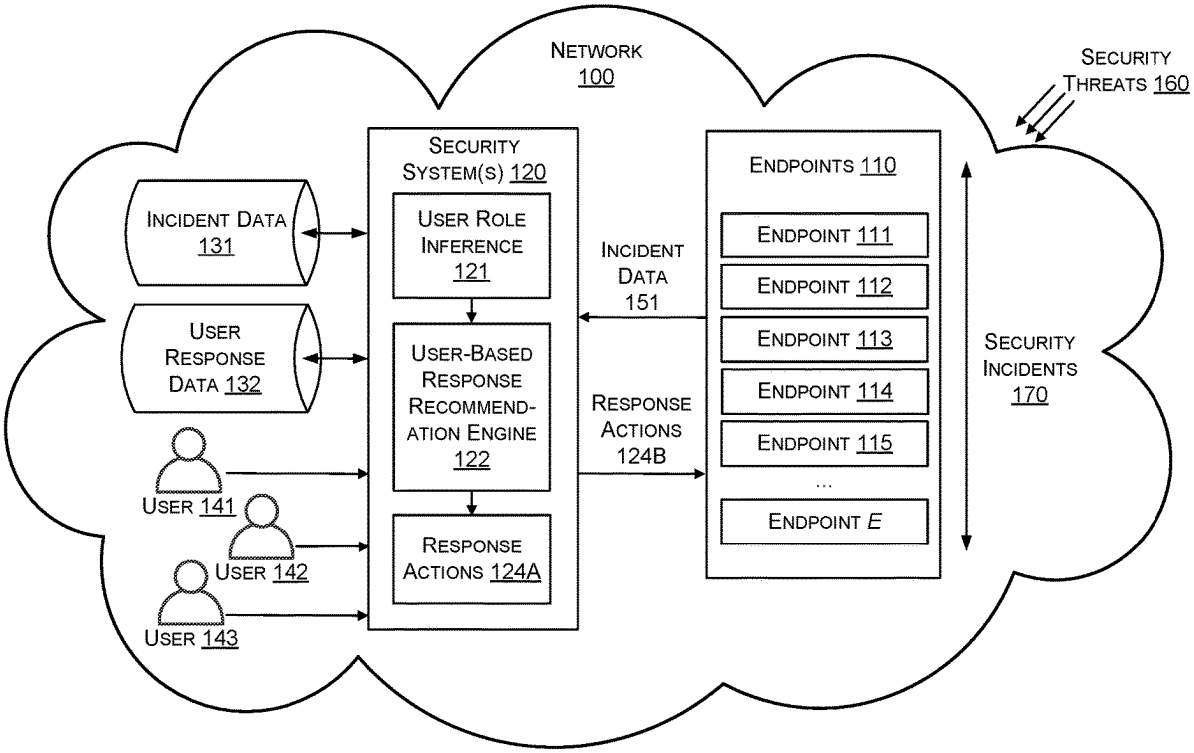

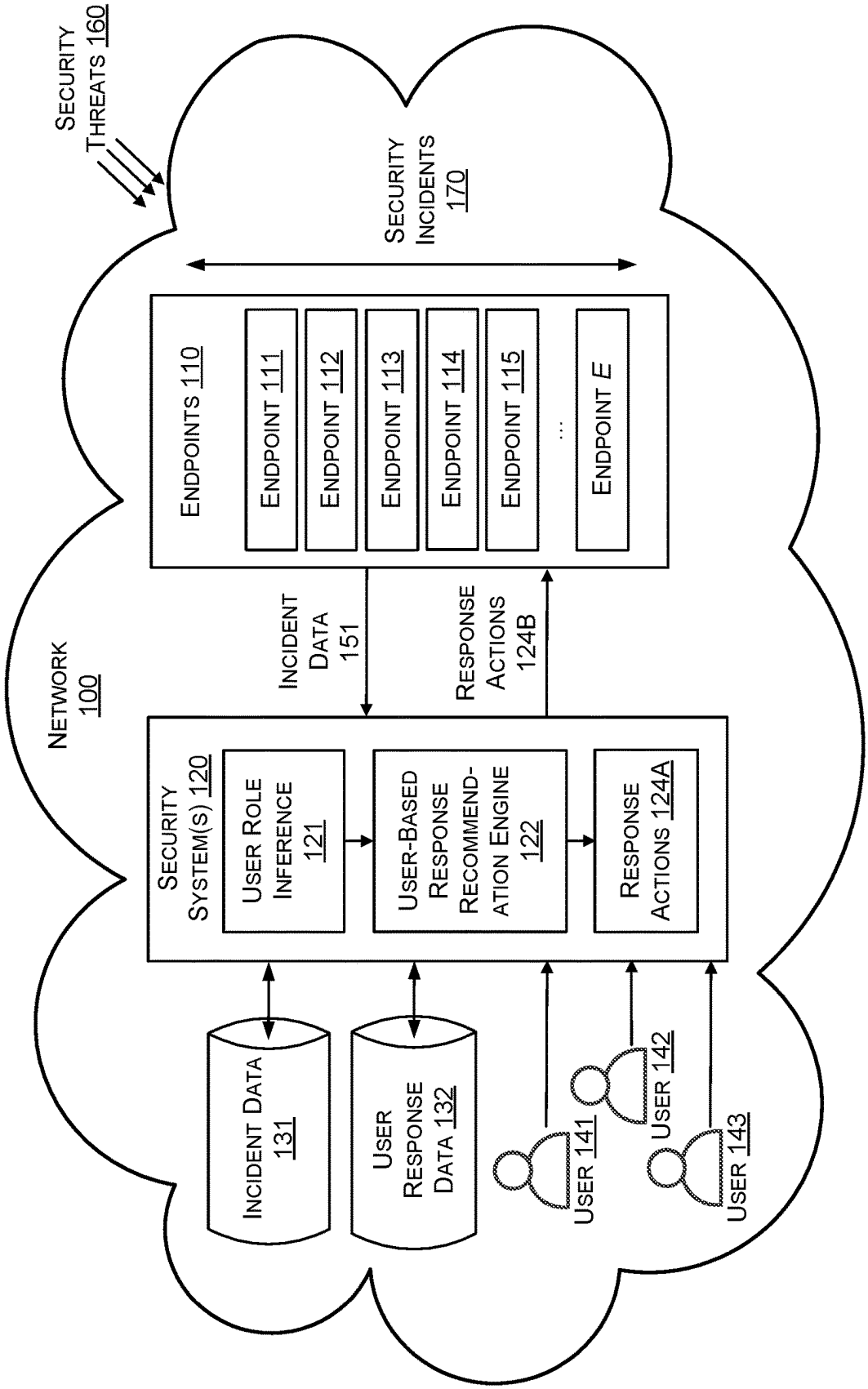
Security Threats 160
Security Incidents 170
Endpoints 110
Endpoint 111
Endpoint 112
Endpoint 113
Endpoint 114
Endpoint 115
...
Endpoint E
Network 100
Incident Data 151
Response Actions 124B
Security System(s) 120
User Role Inference 121
User-Based Response Recommend-ation Engine 122
Response Actions 124A
Incident Data 131
User Response Data 132
User 141
User 142
User 143

FIG. 1

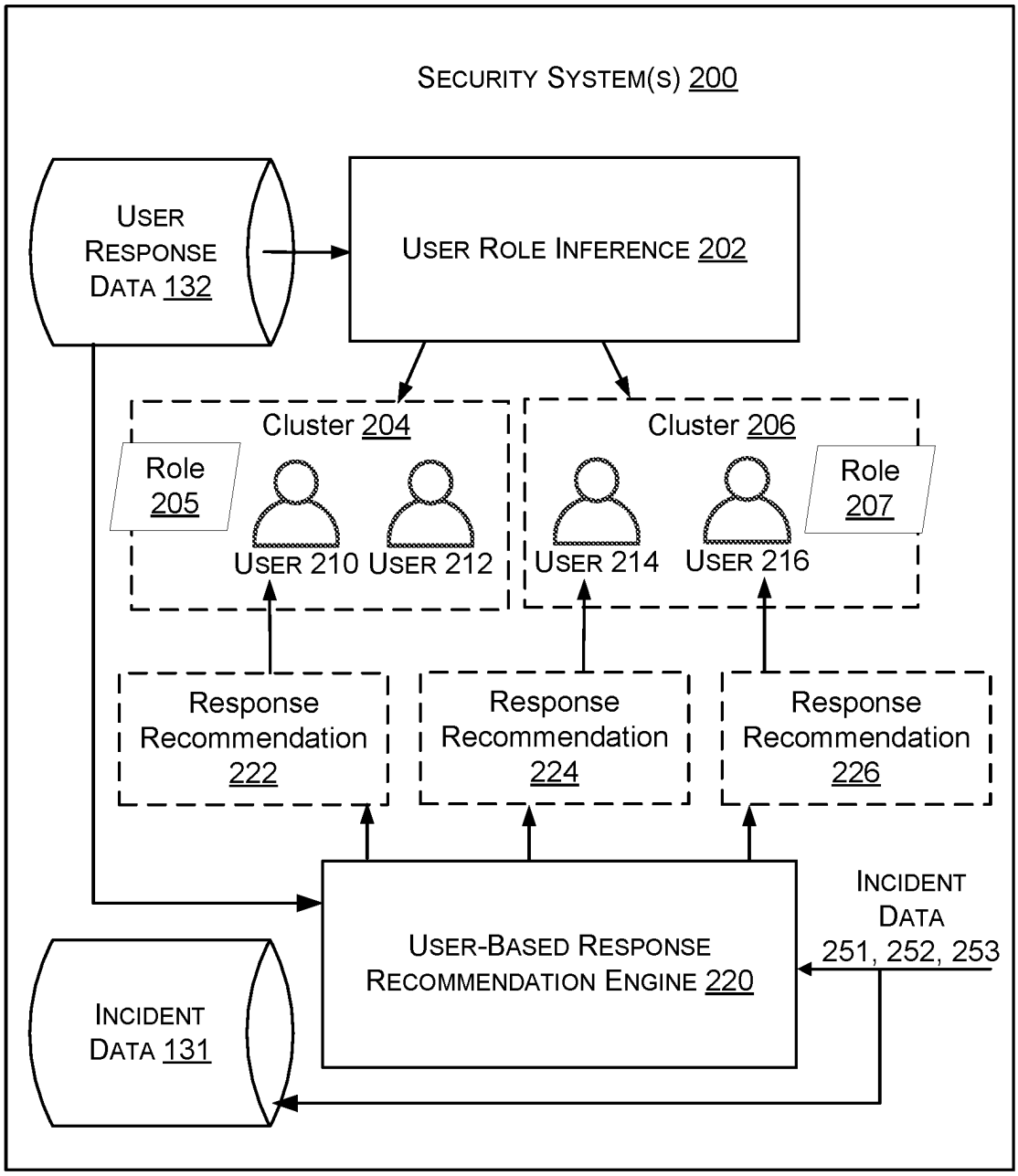
SECURITY SYSTEM(S) 200
USER RESPONSE DATA 132
USER ROLE INFERENCE 202
Cluster 204
Role 205
USER 210
USER 212
Cluster 206
Role 207
USER 214
USER 216
Response Recommendation 222
Response Recommendation 224
Response Recommendation 226
USER-BASED RESPONSE RECOMMENDATION ENGINE 220
INCIDENT DATA 251, 252, 253
INCIDENT DATA 131

FIG. 2

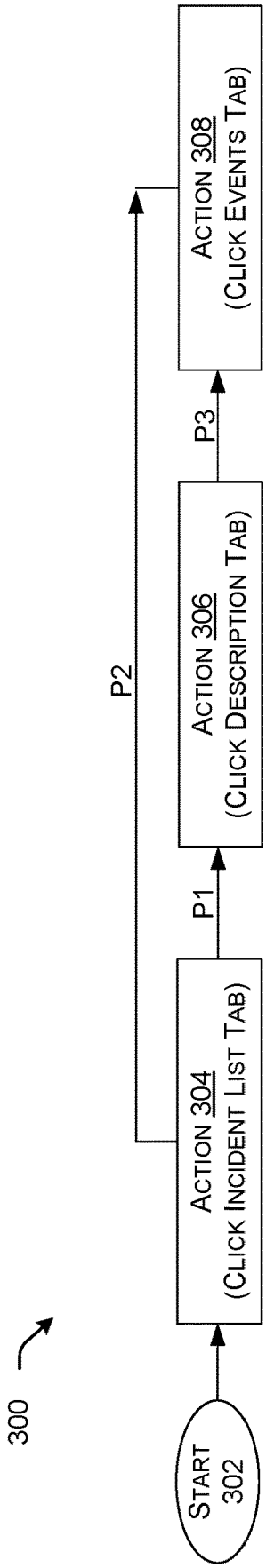
300
START 302
ACTION 304 (CLICK INCIDENT LIST TAB)
P1
P2
ACTION 306 (CLICK DESCRIPTION TAB)
P3
ACTION 308 (CLICK EVENTS TAB)

FIG. 3

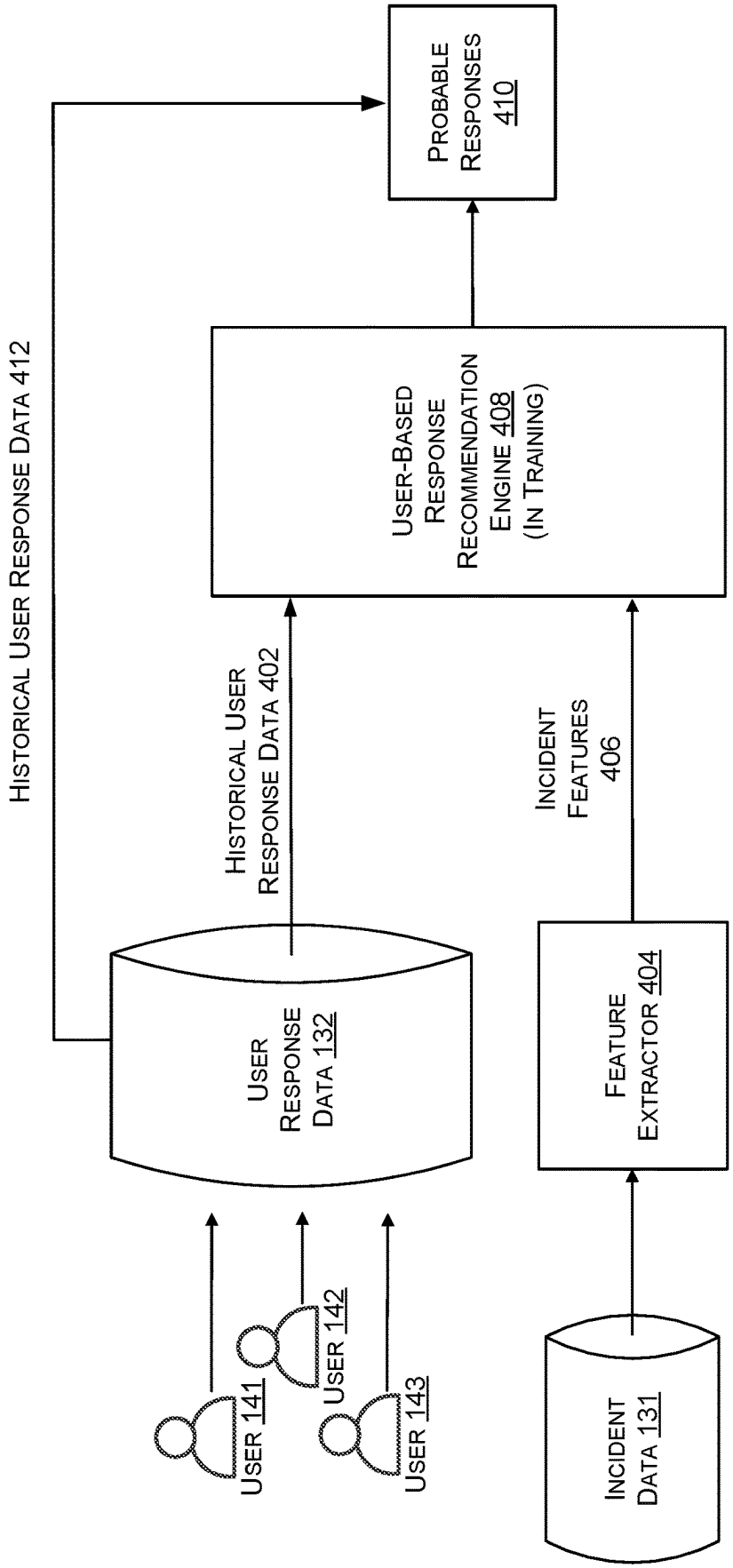
Historical User Response Data 412
Probable Responses 410
User-Based Response Recommendation Engine 408 (In Training)
Historical User Response Data 402
Incident Features 406
User Response Data 132
Feature Extractor 404
User 141
User 142
User 143
Incident Data 131

FIG. 4

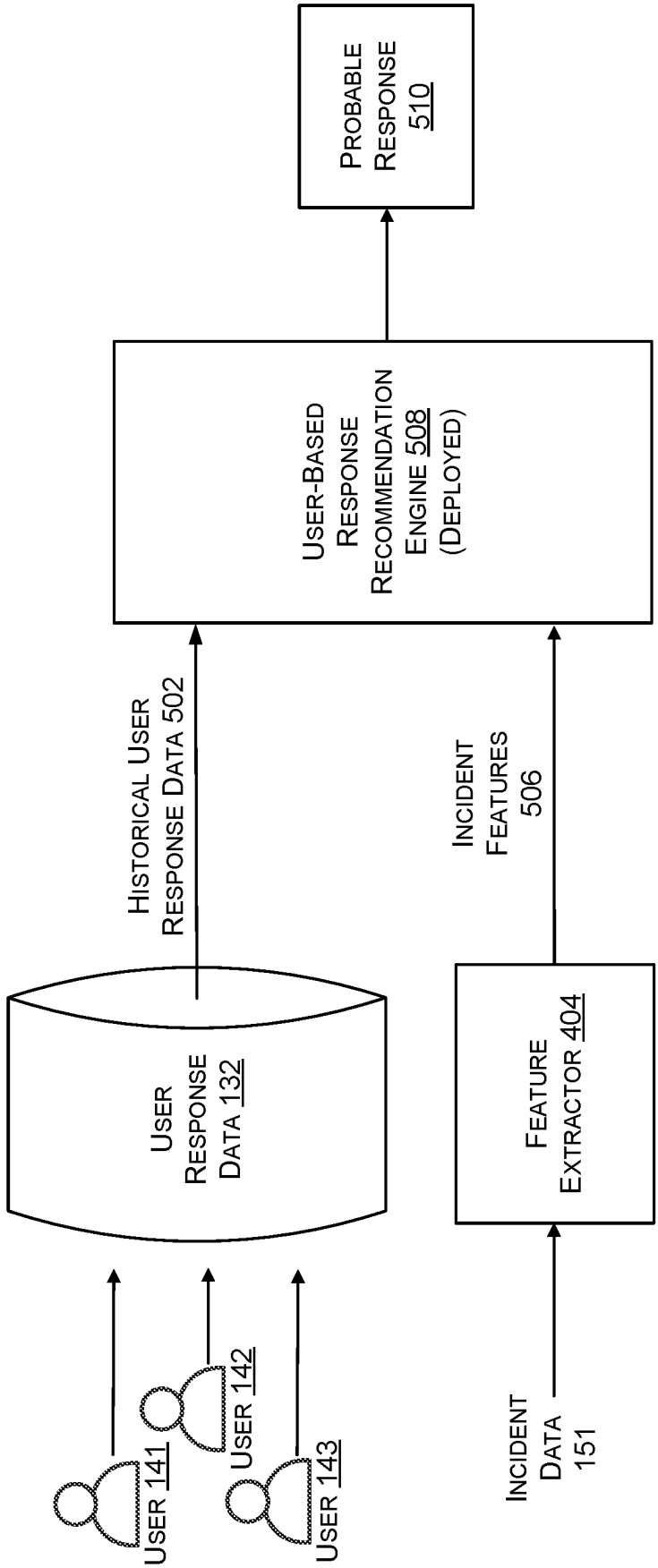
User 141
User 142
User 143
User Response Data 132
Historical User Response Data 502
Incident Data 151
Feature Extractor 404
Incident Features 506
User-Based Response Recommendation Engine 508 (Deployed)
Probable Response 510

FIG. 5

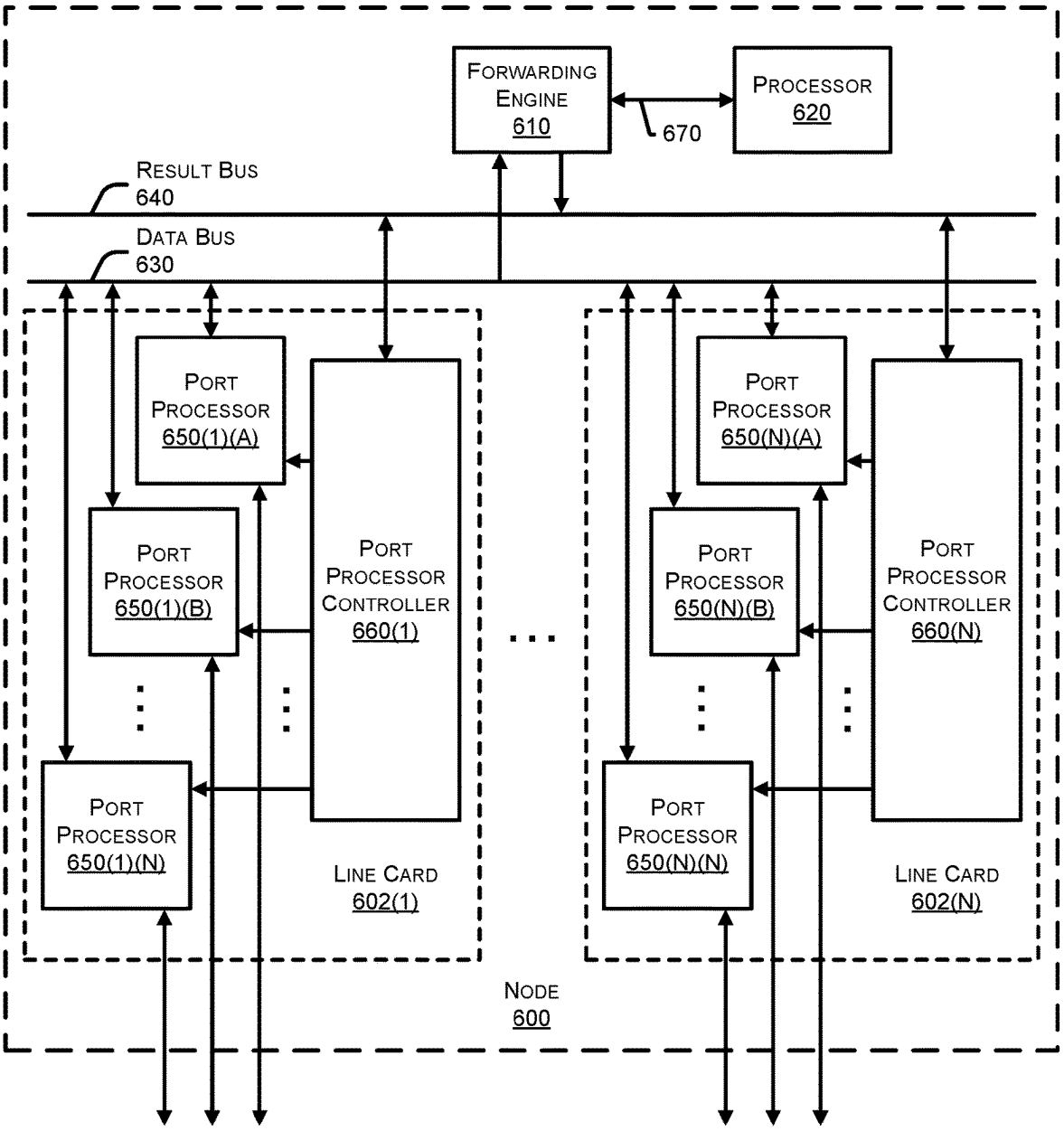
FORWARDING ENGINE 610
PROCESSOR 620
670
RESULT BUS 640
DATA BUS 630
PORT PROCESSOR 650(1)(A)
PORT PROCESSOR 650(1)(B)
PORT PROCESSOR 650(1)(N)
PORT PROCESSOR CONTROLLER 660(1)
LINE CARD 602(1)
PORT PROCESSOR 650(N)(A)
PORT PROCESSOR 650(N)(B)
PORT PROCESSOR 650(N)(N)
PORT PROCESSOR CONTROLLER 660(N)
LINE CARD 602(N)
NODE 600

FIG. 6

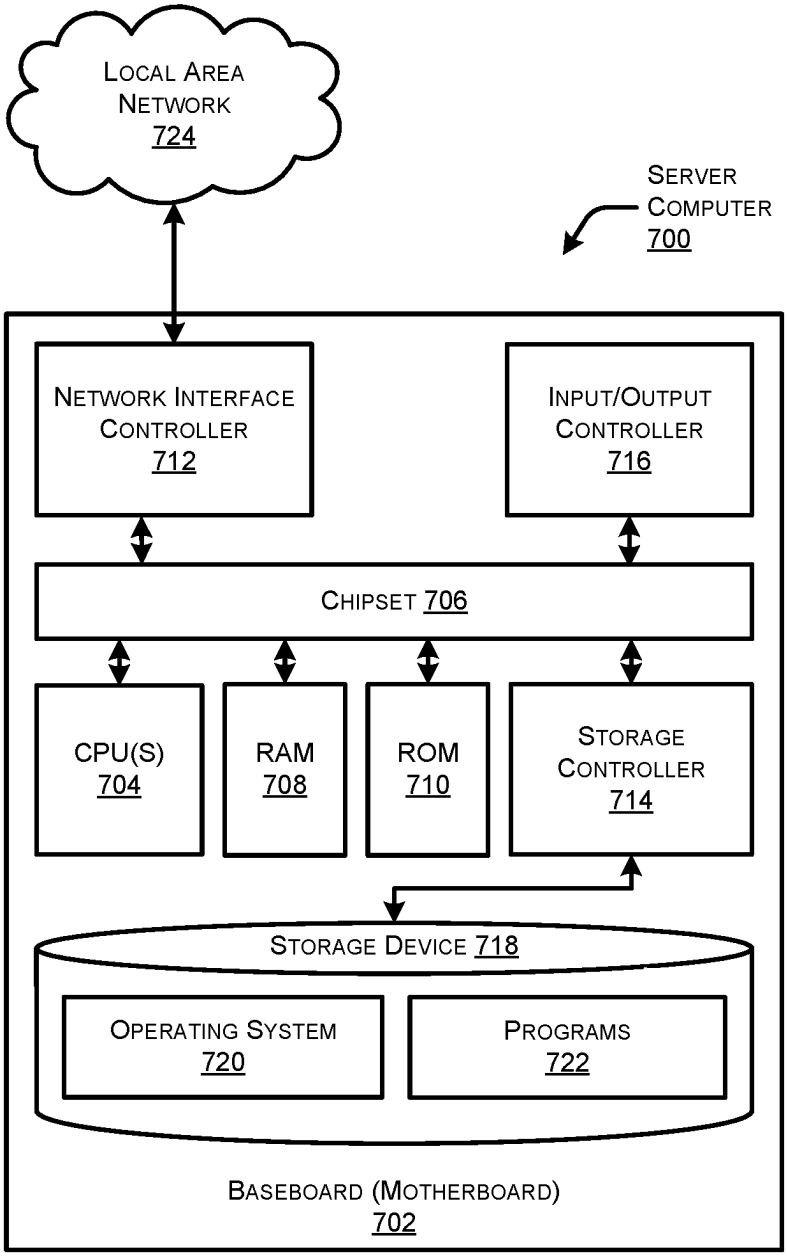
LOCAL AREA NETWORK 724
SERVER COMPUTER 700
NETWORK INTERFACE CONTROLLER 712
INPUT/OUTPUT CONTROLLER 716
CHIPSET 706
CPU(S) 704
RAM 708
ROM 710
STORAGE CONTROLLER 714
STORAGE DEVICE 718
OPERATING SYSTEM 720
PROGRAMS 722
BASEBOARD (MOTHERBOARD) 702

FIG. 7

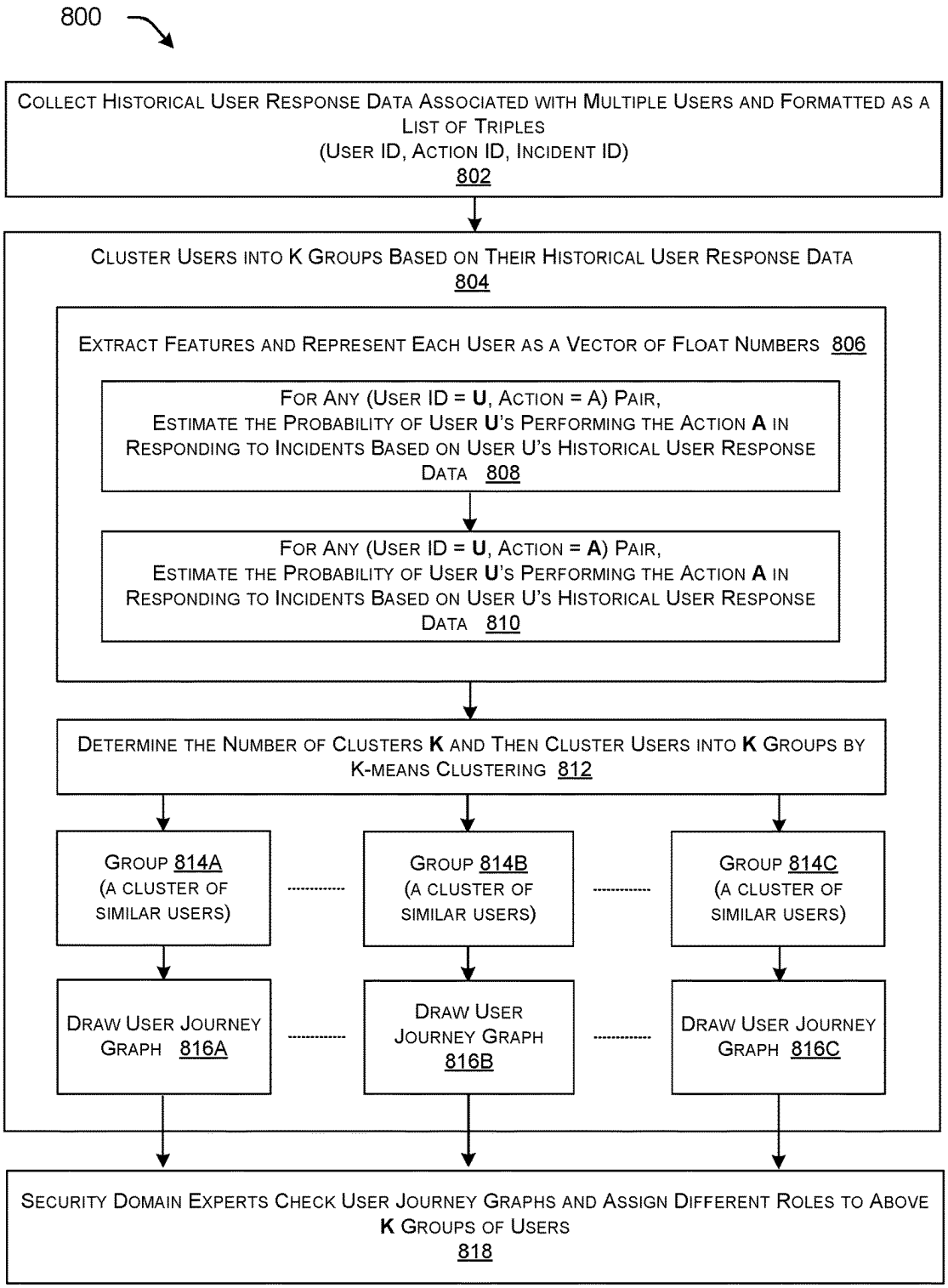
800
Collect Historical User Response Data Associated with Multiple Users and Formatted as a List of Triples (User ID, Action ID, Incident ID) 802
Cluster Users into K Groups Based on Their Historical User Response Data 804
Extract Features and Represent Each User as a Vector of Float Numbers 806
For Any (User ID = U, Action = A) Pair, Estimate the Probability of User U's Performing the Action A in Responding to Incidents Based on User U's Historical User Response Data 808
For Any (User ID = U, Action = A) Pair, Estimate the Probability of User U's Performing the Action A in Responding to Incidents Based on User U's Historical User Response Data 810
Determine the Number of Clusters K and Then Cluster Users into K Groups by K-means Clustering 812
Group 814A (a cluster of similar users)
Group 814B (a cluster of similar users)
Group 814C (a cluster of similar users)
Draw User Journey Graph 816A
Draw User Journey Graph 816B
Draw User Journey Graph 816C
Security Domain Experts Check User Journey Graphs and Assign Different Roles to Above K Groups of Users 818

FIG. 8

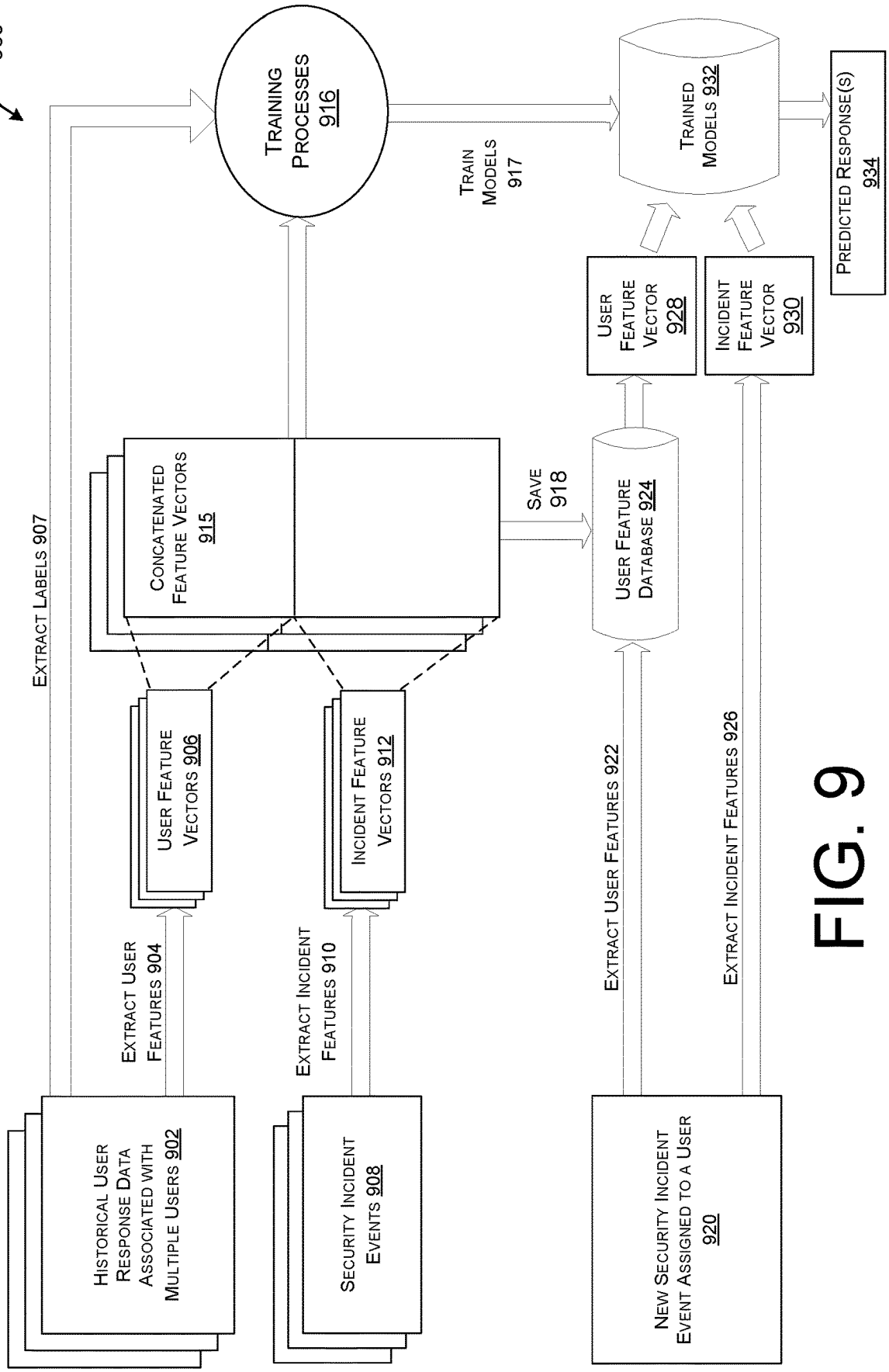
900
Training Processes 916
Train Models 917
Trained Models 932
Predicted Response(s) 934
User Feature Vector 928
Incident Feature Vector 930
Extract Labels 907
Concatenated Feature Vectors 915
Save 918
User Feature Database 924
User Feature Vectors 906
Incident Feature Vectors 912
Extract User Features 904
Extract Incident Features 910
Extract User Features 922
Extract Incident Features 926
Historical User Response Data Associated with Multiple Users 902
Security Incident Events 908
New Security Incident Event Assigned to a User 920

FIG. 9

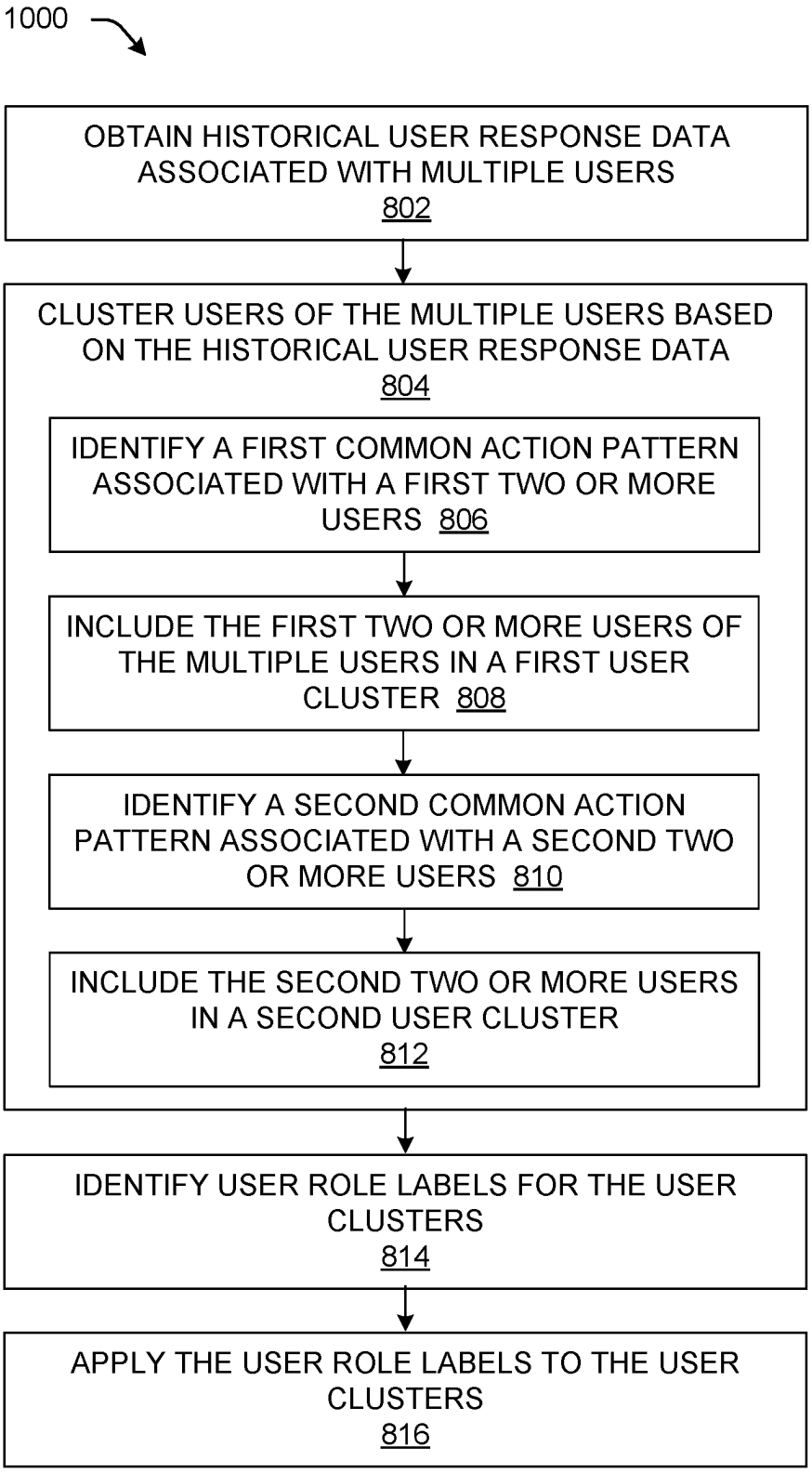
1000
OBTAIN HISTORICAL USER RESPONSE DATA ASSOCIATED WITH MULTIPLE USERS 802
CLUSTER USERS OF THE MULTIPLE USERS BASED ON THE HISTORICAL USER RESPONSE DATA 804
IDENTIFY A FIRST COMMON ACTION PATTERN ASSOCIATED WITH A FIRST TWO OR MORE USERS 806
INCLUDE THE FIRST TWO OR MORE USERS OF THE MULTIPLE USERS IN A FIRST USER CLUSTER 808
IDENTIFY A SECOND COMMON ACTION PATTERN ASSOCIATED WITH A SECOND TWO OR MORE USERS 810
INCLUDE THE SECOND TWO OR MORE USERS IN A SECOND USER CLUSTER 812
IDENTIFY USER ROLE LABELS FOR THE USER CLUSTERS 814
APPLY THE USER ROLE LABELS TO THE USER CLUSTERS 816

FIG. 10

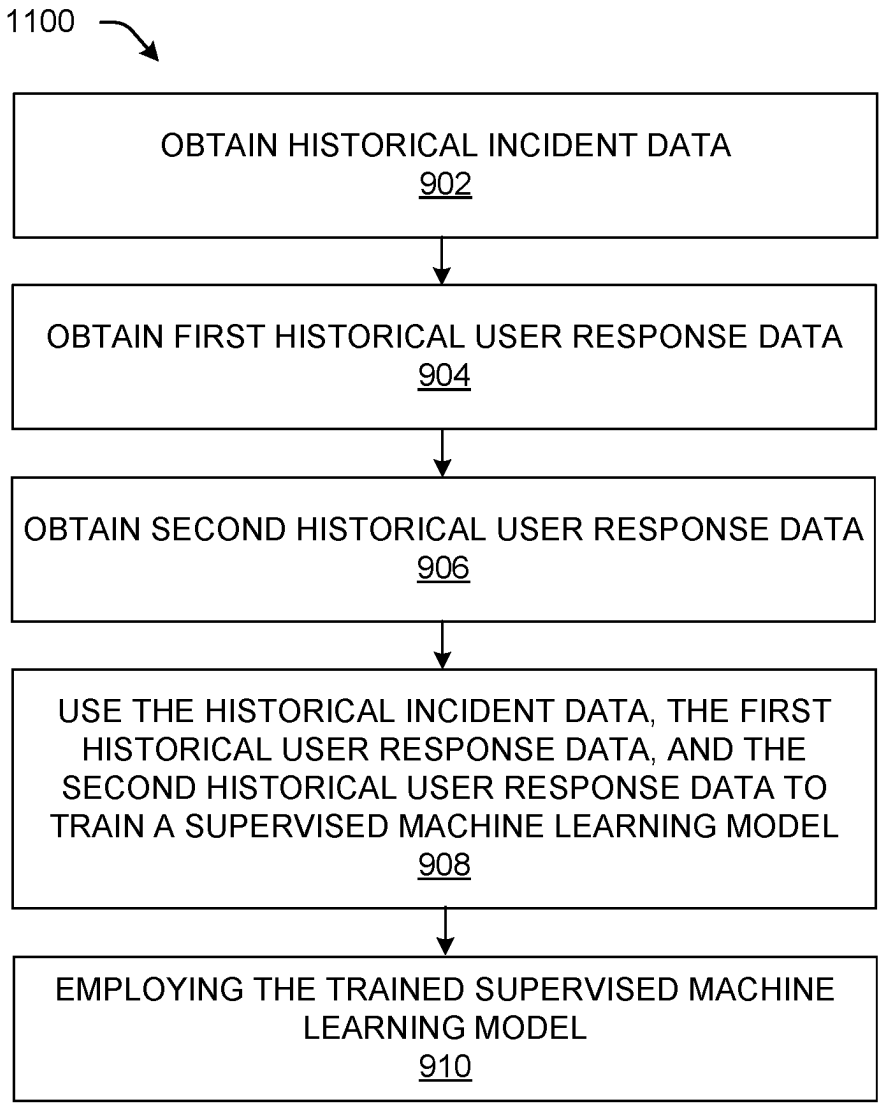
1100
OBTAIN HISTORICAL INCIDENT DATA
902
OBTAIN FIRST HISTORICAL USER RESPONSE DATA
904
OBTAIN SECOND HISTORICAL USER RESPONSE DATA
906
USE THE HISTORICAL INCIDENT DATA, THE FIRST HISTORICAL USER RESPONSE DATA, AND THE SECOND HISTORICAL USER RESPONSE DATA TO TRAIN A SUPERVISED MACHINE LEARNING MODEL
908
EMPLOYING THE TRAINED SUPERVISED MACHINE LEARNING MODEL
910

FIG. 11

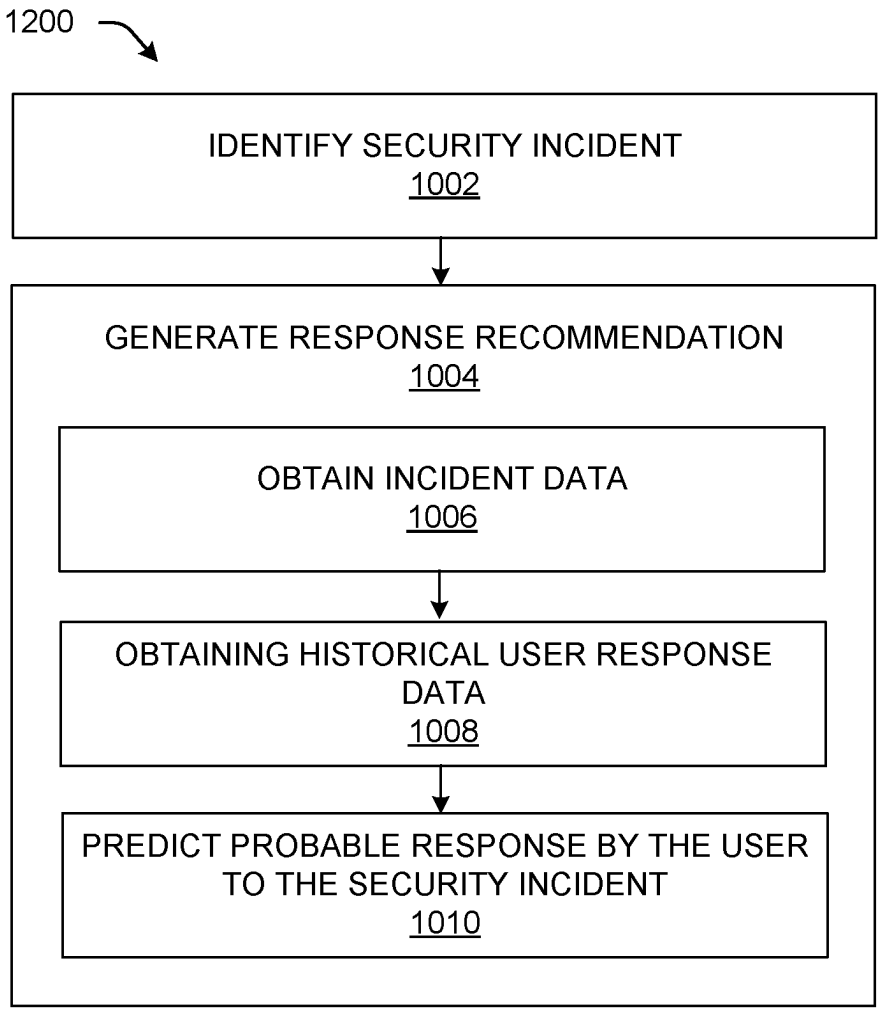
1200
IDENTIFY SECURITY INCIDENT
1002
GENERATE RESPONSE RECOMMENDATION
1004
OBTAIN INCIDENT DATA
1006
OBTAINING HISTORICAL USER RESPONSE DATA
1008
PREDICT PROBABLE RESPONSE BY THE USER TO THE SECURITY INCIDENT
1010

FIG. 12

USER BASED THREAT RESPONSE RECOMMENDATIONS

TECHNICAL FIELD

[0001] The present disclosure relates generally to computing security, and to protecting network endpoints and other computing devices from security compromise in particular.

BACKGROUND

[0002] Today's computer systems face an ever-growing number of security threats. Attack surfaces have grown due to an increasing variety of device types and applications, and the number and variety of security threats has therefore grown as well.

[0003] An ongoing arms race exists between attacks and attack detection techniques. More detection is generally perceived as better security, and as a result, detection has become increasingly aggressive. However, increasingly aggressive detection can run the risk of introducing more false positives which can be a drain on valuable security resources.

[0004] Responding to security events is often complex and resource intensive. Security appliances deployed in a network and their associated policies can vary greatly. Making sense of different security events and then acting on such events is often tedious and requires deep knowledge and experience.

[0005] Moreover, different organizations may have different threat response policies and different available resources for computing security. An organization such as a bank may invest heavily in computing security and may impose stringent security policies. In contrast, a school may not need a similar level of computing security and may not have the same tools and resources as the bank.

[0006] Different security analysts within an organization can also be subject to different policies. Security analysts are also referred to herein as users due to their use of available security systems. More trusted or more highly skilled users may be allowed access to more sensitive information and more powerful tools than less trusted or less highly skilled users, and the more highly skilled users may likewise be subject to different security policies.

[0007] The complexity of effective security response can lead some companies to ignore security events or tune down detection sensitivity thresholds in order to save resources. Security can become compromised as proper event response becomes unaffordable, sometimes resulting in a waste of money invested in detection.

[0008] In view of the above, techniques are needed to make responding to security events more efficient and effective in part by efficiently and effectively determining different appropriate security responses for different security analysts within different organizations.

BRIEF DESCRIPTION OF THE DRAWINGS

[0009] The detailed description is set forth below with reference to the accompanying figures. In the figures, the left-most digit(s) of a reference number identifies the figure in which the reference number first appears. The use of the same reference numbers in different figures indicates similar or identical items. The systems depicted in the accompanying figures are not to scale and components within the figures may be depicted not to scale with each other.

[0010] FIG. **1** illustrates an example network architecture including security system(s) adapted to generate and employ customized security response recommendations, in accordance with various aspects of the technologies disclosed herein.

[0011] FIG. **2** illustrates example security system(s) which may implement the security system(s) introduced in FIG. **1**, in accordance with various aspects of the technologies disclosed herein.

[0012] FIG. **3** illustrates an example user journey graph that can be generated by a user role inference component such as the user role inference component introduced in FIG. **2**, in accordance with various aspects of the technologies disclosed herein.

[0013] FIG. **4** illustrates example operations of a user-based response recommendation engine in a training stage and in accordance with various aspects of the technologies disclosed herein.

[0014] FIG. **5** illustrates example operations of a user-based response recommendation engine in a deployed stage and in accordance with various aspects of the technologies disclosed herein.

[0015] FIG. **6** illustrates an example node that can be utilized to implement an endpoint in a network, in accordance with various aspects of the technologies disclosed herein.

[0016] FIG. **7** illustrates an example computer hardware architecture that can implement the security system(s) disclosed herein, in accordance with various aspects of the technologies disclosed herein.

[0017] FIG. **8** illustrates an example user role inference architecture, in accordance with various aspects of the technologies disclosed herein.

[0018] FIG. **9** illustrates an example user-based response recommendation architecture, in accordance with various aspects of the technologies disclosed herein.

[0019] FIG. **10** is a flow diagram that illustrates an example method performed in connection with user role inference, in accordance with various aspects of the technologies disclosed herein.

[0020] FIG. **11** is a flow diagram that illustrates an example method performed in connection with training of a user-based response recommendation engine, in accordance with various aspects of the technologies disclosed herein.

[0021] FIG. **12** is a flow diagram that illustrates an example method performed in connection the use of a deployed a user-based response recommendation engine, in accordance with various aspects of the technologies disclosed herein.

DESCRIPTION OF EXAMPLE EMBODIMENTS

Overview

[0022] This disclosure describes techniques that can be performed in connection with generating customized security response recommendations for different security analysts in different organizations. Example techniques can include techniques for inference of user roles based on behavioral clustering, techniques for generating user-based threat response recommendations, and combinations of thereof.

[0023] According to an example embodiment configured for inference of user roles based on behavioral clustering, a method can be performed by devices that provide a security

system in a network. The method can include obtaining historical user response data associated with multiple users, wherein the historical user response data comprises indications of previous responses by the multiple users to previous security incidents, and clustering users of the multiple users based on the historical user response data, resulting in two or more different user clusters.

[0024] The clustering can comprise, for example, identifying, based on the historical user response data, a first common action pattern exhibited in historical user response data associated with a first two or more users of the multiple users, and including the first two or more users of the multiple users in a first user cluster of the two or more different user clusters. Similarly, a second common action pattern exhibited in historical user response data and associated with a second two or more users of the multiple users can also be identified based on the historical user response data. The second two or more users of the multiple users can be included in a second user cluster of the two or more different user clusters.

[0025] Labels can be identified and applied to the clusters. For example, the method can include identifying, based on the first common action pattern, a first user role label for the first user cluster, applying the first user role label to the first user cluster, identifying, based on the second common action pattern, a second user role label for the second user cluster, and applying the second user role label to the second user cluster.

[0026] According to an example embodiment configured for generating user-based threat response recommendations, further methods can be performed by devices that provide a security system in a network. The methods can include identifying, by a security system within a network, a security incident within the network, and generating, by the security system, a response recommendation for a user, wherein the response recommendation recommends a response by the user to the security incident.

[0027] Generating the response recommendation can comprise, for example, obtaining incident data associated with the security incident, and obtaining historical user response data associated with the user, wherein the historical user response data comprises indications of previous responses by the user to previous security incidents. Based on the incident data and the historical user response data, a probable response by the user to the security incident can be predicted. The response recommendation for the user can comprise the probable response.

[0028] The techniques described herein may be performed by one or more computing devices comprising one or more processors and one or more computer-readable media storing computer-executable instructions that, when executed by the one or more processors, cause the one or more processors to perform the methods disclosed herein. The techniques described herein may also be accomplished using non-transitory computer-readable media storing computer-executable instructions that, when executed by one or more processors, perform the methods carried out by the network controller device.

EXAMPLE EMBODIMENTS

[0029] In an example according to this disclosure, security system(s) can generate customized, user-based security response recommendations for users of the security system (s), such as for security analysts tasked with performing responses to security threats. A user-based response recommendation engine can generate the user-based security response recommendations based on incident data associated with security incidents and also based on historical user response data associated with users tasked with responding to the security incidents. Furthermore, user role inference techniques are disclosed herein which can optionally be used in conjunction with the user-based response recommendation engine. For example, the disclosed user role inference techniques can be used to in connection with user training or to avoid recommending ineffective security response actions.

[0030] The disclosed user-based response recommendation engine can generally operate by predicting user actions for responding to security incidents. The predicted actions can be used for recommending actions to users so that they are able to respond to security incidents more efficiently and effectively. The predicted actions can also optionally be used to build automated responses to security incidents in some embodiments.

[0031] In some examples, the problem of predicting user actions for responding to security incidents can be formulated as a supervised machine learning problem. Embodiments can train a supervised machine learning model to process inputs including both user features and security incident features, and the supervised machine learning model can output predictions of what actions a user may take in response to the security incident. The trained supervised machine learning model can comprise a decision function which maps user features and security incident features into a set of actions.

[0032] The operations of the trained supervised machine learning model are represented below:

[0033] f(features (user), features(incident))→a set of actions

where features (user) can include a vector of user features, and features (incident) can include a vector of security incident features. These inputs are provided to the trained supervised machine learning model, and the trained supervised machine learning model can output a set of actions that the user is predicted to take in response to the security incident. The vector of user features can be extracted or generated from historical user response data associated with a user, e.g., from historical user response data comprising indications of previous responses by the user to previous security incidents. The vector of user features can therefore represent the user's behavior and habits for responding to security incidents. The vector of security incident features can be extracted or generated from any security incident data, e.g., from a name, description, or other data pertaining to the security incident. The vector of security incident features can optionally represent an incident's type, source, severity and/or other properties.

[0034] The vector of user features and the vector of security incident features can be supplied as inputs to the trained supervised machine learning model. The trained supervised machine learning model can be configured to process the inputs and to generate, based on the inputs, a prediction of the user's probable action(s) in response to the security incident.

[0035] The user-based response recommendation engine can generate a response recommendation for the user based on the prediction output from the trained supervised machine learning model. In some embodiments, the user-

based response recommendation engine can then provide the response recommendation to the user, enabling the user to respond to the security incident more efficiently and effectively. In some other embodiments, the user-based response recommendation engine can include an automated response function that automatically performs actions recommended in the response recommendation. An automated response function can build automated responses comprising one or more actions encoded as sets of commands or rules.

[0036] Some example prediction outputs, and corresponding response recommendations, can comprise actions such as initiating a quarantine of a security threat, initiating a system recovery of a system comprising a security threat, blocking an internet protocol (IP) address associated with a security threat, and blocking a hostname associated with a security threat.

[0037] Some further example prediction outputs, and corresponding response recommendations, can comprise actions that may be specific to a particular security system, such as creating tickets used by the security system, applying a resource requirement via the security system, selecting security system tabs, buttons, or other controls, and/or holding a security incident for future processing.

[0038] Some further example prediction outputs, and corresponding response recommendations, can comprise detailed/specific actions, such as such as running one or more commands, e.g., Linux commands or otherwise, running or applying one or more short rules, running or applying one or more executable codes, or running or applying one or more actions from an incident response playbook.

[0039] Example prediction outputs, and corresponding response recommendations, can also comprise groups or sequences of the above example actions, e.g., a group of actions optionally performed in a particular order. In general, this disclosure is not limited to any particular prediction outputs. Instead, prediction outputs are a function of previous user actions in response to security incidents. As such, any action, group of actions, or sequence of actions can be predicted so long as it is based on the user's previous actions/responses.

[0040] Example features that can be included in user feature vectors, whether such vectors are used for training of a supervised machine learning model or subsequently as an input to a trained supervised machine learning model, include user features and organization features. Some example user features include user information such as a user's age, education, working experience, and/or location, as well as the user's historical action vector which can be computed e.g., as a bag-of-word model of actions included in the user's historical incident responses.

[0041] Example features that can be included in incident feature vectors, whether such vectors are used for training of a supervised machine learning model or subsequently as an input to a trained supervised machine learning model, include indications of a source of a security incident, optionally in the form of a binary vector including a one-hot representation of data. Another example feature that can be included in incident feature vectors is a description of the incident, optionally in the form of a binary vector including a one-hot representation of tokens in an incident's description field.

[0042] Some further example features, which can be included in user and/or incident feature vectors, are a total number of incidents to which a user has responded in a trailing time window, e.g., a one-week, one-month, or one-year trailing time window. Another example feature can comprise an indication of whether a user responded to an incident from a particular source, e.g., a same source as a current incident, within another trailing time window, e.g., a one-week, one-month, or one-year trailing time window. Another example feature can comprise an indication of whether a user responded to an incident having a same title as a current incident, within another trailing time window, e.g., a one-week, one-month, or one-year trailing time window.

[0043] Techniques for inference of user roles based on behavioral clustering are also disclosed herein and can be used to supplement the disclosed techniques for generating user-based threat response recommendations. For example, a user's role can be inferred according to the techniques disclosed herein, and recommendations generated for certain users, e.g., for less experienced users, can be modified to avoid error loops in which previous user mistakes or incorrect actions are recommended for a user. The techniques for inference of user roles based on behavioral clustering can also optionally be used independently, e.g., to infer user roles for user training, or to organize teams, or any other purpose.

[0044] Techniques for inference of user roles based on behavioral clustering can be configured to infer user roles from user historical responses to security incidents. In one example operation, users can be clustered into groups according to their historical interactions with security incidents. In a subsequent example operation, common action pattens of users within each group can be identified, and the common action patterns can optionally be represented as user journey graphs. In a subsequent example operation, the user groups can be labeled according to their user journey graphs.

[0045] In order to cluster users into groups, each user's historical actions to respond to security incidents can be collected, and then each user can be represented as a user action probability vector, representing probabilities of different actions in connection with responding to incidents. The collected historical actions can comprise generic actions such as a quarantine, a system recovery, a block IP, and/or a block hostname. The collected historical actions can alternatively or additionally comprise platform specific actions such as creating tickets, requiring more resources, clicking/selected tabs for investigation, and/or holding for future processing. The collected historical actions can alternatively or additionally comprise actions represented by commands (e.g., Linux commands), short rules, executable codes, and/or actions in an incident response playbook.

[0046] User action probability vectors can optionally take the form below:

$$p_u = \langle p_{u1}, p_{u2}, p_{u3}, \ldots, p_{um} \rangle$$

where u is the user, m is the total number of actions, and p{ui} is the probability of user u performing an action i for responding security incidents. Each value p{ui} can be computed using the below formula:

$$p_{uk} = \frac{\text{number of incidents for which user } u \text{ performed action } k}{\text{user } u \text{ total number of incidents}}$$

[0047] In a next example operation, user action probability vectors can be placed into a matrix U. An example matrix U is illustrated below.

$$U = \begin{pmatrix} u_1 \\ u_2 \\ \cdots \\ u_n \end{pmatrix} = \begin{pmatrix} p_{11} & p_{12} & \cdots & p_{1m} \\ p_{21} & p_{22} & \cdots & p_{2m} \\ \cdots & \cdots & \cdots & \cdots \\ p_{n1} & p_{n2} & \cdots & p_{nm} \end{pmatrix}$$

[0048] In the above matrix U, n is the total number of users, each row is a user action probability vector associated with a different user u, and m is a total number of actions.

[0049] In a next example operation, users can be clustered, common action patterns can be identified for each cluster, and the common action patterns can optionally be visualized as user journey graphs. In an example clustering approach, a K-means++ clustering technique can be applied to assign similar rows in the matrix U into user clusters/groups.

[0050] A total number of groups can be determined using an Elbow Curve method. For example, the K-means++ clustering technique can be applied multiple times, each time with a different number of target output groups. The number of target output groups can start for example at two, and then increase by one in each round. The number of groups at which the within-cluster distance begins to flatten can be selected as the desired number of target output groups.

[0051] Once the users are clustered into the desired number of target output groups, common action patterns can be identified within each cluster. For example, a common action pattern of all users within a same cluster can be extracted as a user journey graph, by fitting a Markov chain model. An example user journey graph can comprise a tree or other flow that includes probabilities of a user progressing from one action to a next action.

[0052] After the common action patterns are identified, different user groups/clusters can be labeled. The user journey graphs can optionally be used in connection with labeling. In some embodiments, clusters can be labeled by a skilled/experienced user or security analyst. Example labels can include, e.g., "level 1 responders" and "level 2 responders" or "new responders" and "experienced responders."

[0053] Certain implementations and embodiments of the disclosure will now be described more fully below with reference to the accompanying figures, in which various aspects are shown. However, the various aspects may be implemented in many different forms and should not be construed as limited to the implementations set forth herein. The disclosure encompasses variations of the embodiments, as described herein. Like numbers refer to like elements throughout.

[0054] FIG. **1** illustrates an example network architecture including security system(s) **120** adapted to generate and employ customized security response recommendations, in accordance with various aspects of the technologies disclosed herein. FIG. **1** includes a network **100** that is subject to ongoing security threats **160**. The network **100** can comprise any number of endpoints **110**, including example endpoints **111**, **112**, **113**, **114**, **115**, . . . , E. One or more of the endpoints **110** can experience security incidents **170** as a result of the security threats **160**. The network **100** can further comprise security system(s) **120**, incident data **131**, and user response data **132**.

[0055] The security system(s) **120** can include, inter alia, user role inference **121** and user-based response recommendation engine **122**. Users **141**, **142**, **143** can comprise for example security analysts tasked with interacting with the security system(s) **120**. The users **141**, **142**, **143** can generally perform response actions, including response actions **124**A within the security system(s) **120** as well as response actions **124**B affecting or reconfiguring the endpoints **110**. The response actions **124**A, **124**B can be performed pursuant to response recommendations generated by the user-based response recommendation engine **122** described herein.

[0056] In an example according to FIG. **1**, multiple different security threats **160** can result in multiple different security incidents **170** over time. Each time a security incident occurs, incident data **151** such as a title, description, severity, affected endpoint(s) **110**, and other incident attributes can be gathered by the security system(s) **120** and stored within incident data **131**, wherein incident data **131** can comprise a database, data store, or other storage. The incident data **131** can therefore comprise a catalog of historical security incidents along with security incident properties.

[0057] Furthermore, as the users **141**, **142**, **143** interact with the security system(s) **120** to respond to the incidents **170**, the response actions of the various users **141**, **142**, **143** can be logged by the security system(s) **120** as user response data **132**. For example, user actions such as selecting certain tabs or tools provided by the security system(s) **120**, or quarantining certain endpoint(s) **110**, or blocking IP addresses used within the network **100**, can be stored as user response data **132**. The user response data **132** can be associated with the user (of users **141**, **142**, **143**) who took the response actions, and can also be associated with or include incident attributes of the incident (identified in incident data **131**) which triggered the user response.

[0058] Initially, the user response data **132** can optionally be used by user role inference **121** to cluster the users **141**, **142**, **143** into different groups or clusters. User role inference **121** can also label the resulting clusters or users within each cluster, e.g., by applying user role labels that identified users according to their experience/skill levels in responding to incidents **170**.

[0059] Furthermore, initially the user-based response recommendation engine **122** can be trained, using at least a portion of the user response data **132** and the incident data **131**, so that the user-based response recommendation engine **122** learns to identify probable user response actions based on input data comprising security incident data (e.g., associated with one of the security incidents in the incident data **131**), and historical user response data (e.g., associated with one of the users **141**, **142**, or **143** identified in the user response data **132**).

[0060] After the initial operations of user role inference **121** and the training of the user-based response recommendation engine **122**, the trained user-based response recommendation engine **122** can be deployed and used within the security system(s) **120**. Upon occurrence of a current security incident of security incidents **170**, the security system(s) **120** can collect incident data **151** for the current security incident. The security system(s) **120** can furthermore identify a user, e.g., user **141**, who is tasked with responding to the current incident. The security system(s) **120** can then

collect applicable user response data associated with the identified user **141** from the user response data **132**.

[0061] The security system(s) **120** can provide the incident data **151** for the current security incident, as well as applicable user response data associated with the identified user **141**, as inputs to the user-based response recommendation engine **122**. The user-based response recommendation engine **122** can process the supplied inputs and generate response recommendations for the identified user **141**. The response recommendations can comprise predicted actions that the identified user **141** would probably take in response to the current security incident. The identified user **141** can then choose to follow the response recommendations when performing response actions **124**A and/or **124**B.

[0062] In some embodiments, the security system(s) **120** can furthermore be configured to apply user role information associated with the identified user **141**. For example, when the identified user **141** is labeled as an experienced user, the security system(s) **120** can generate response recommendations as described above, namely, by supplying applicable user response data associated with the identified user **141** as one of the inputs to the user-based response recommendation engine **122**. However, when the identified user **141** is labeled as an inexperienced user, the security system(s) **120** can generate response recommendations by instead supplying applicable user response data associated with a different, experienced user, e.g., user **142**, as one of the inputs to the user-based response recommendation engine **122**. Alternatively, the security system(s) **120** can otherwise implement a check or further processing, to ensure that inexperienced users benefit from effective response recommendations.

[0063] FIG. **2** illustrates example security system(s) **200** which may implement the security system(s) **120** introduced in FIG. **1**, in accordance with various aspects of the technologies disclosed herein. The example security system(s) **200** include user role inference **202** and user-based response recommendation engine **220**, which can implement the user role inference **121** and the user-based response recommendation engine **122**, respectively.

[0064] In an example according to FIG. **2**, the user role inference **202** can process user response data **132**, introduced in FIG. **1**, to generate user clusters **204**, **206**. Each cluster can comprise a group of users, e.g., cluster **204** includes users **210** and **212**, and cluster **206** includes users **214** and **216**. Furthermore, each cluster can optionally be labeled according to a user role, e.g., role **205** or role **207**, identified for a cluster. The roles **205**, **207** can optionally comprise a user experience level of the users in a cluster.

[0065] Furthermore, the user-based response recommendation engine **220** can process incident data **251**, **252**, **253** arising from three example current incidents, as well as applicable user data obtained from user response data **132**, introduced in FIG. **1**. The incident data **251**, **252**, **253** can also be stored along with other incident data **131**, introduced in FIG. **1**.

[0066] In an example, the security system(s) **200** can identify user **216** as the security analyst to respond to the incident associated with the incident data **251**, and so the applicable user data for incident data **251** can comprise the user data for user **216**. Similarly, the applicable user data for incident data **252** can comprise the user data for user **214**, and the applicable user data for incident data **253** can comprise the user data for user **210**.

[0067] The user-based response recommendation engine **220** can therefore be deployed into the security system(s) **200** and used by the security system(s) to process incident data **251** as well as user data for user **216** as inputs; and can output response recommendation **226** for user **216**'s response to incident data **251**. Similarly, the user-based response recommendation engine **220** can process incident data **252** as well as user data for user **214** as inputs and can output response recommendation **224** for user **214**'s response to incident data **252**. The user-based response recommendation engine **220** can process incident data **253** as well as user data for user **210** as inputs and can output response recommendation **222** for user **210**'s response to incident data **253**.

[0068] The security system(s) **200** can also optionally be configured to include clusters **204**, **206** and roles **205**, **207** in the generation of the response recommendations **222**, **224**, **226**. For example, consider a scenario where role **205** is an inexperienced or new user role, and role **207** is an experienced or advanced user role. Security system(s) **200** can optionally be configured to identify the role **205** applicable to user **210**, and, in view of the role **205** being an inexperienced user, the security system(s) can be configured to use another user's data, e.g., the user data for user **214**, in connection with generating the response recommendation **222**. Therefore, the user-based response recommendation engine **220** can process incident data **253** as well as user data for user **214** as inputs and can output response recommendation **222** for user **210**'s response to incident data **253**.

[0069] FIG. **3** illustrates an example user journey graph **300** that can be generated by a user role inference component such as the user role inference **202** introduced in FIG. **2**, in accordance with various aspects of the technologies disclosed herein. The user journey graph **300** includes a start **302**, an example first action **304**, an example second action **306**, and an example third action **308**. The example first action **304** can comprise, e.g., user's a click on an incident list tab provided by a security system. The example second action **306** can comprise, e.g., user's a click on a description tab provided by the security system. The example third action **308** can comprise, e.g., user's a click on an events tab provided by the security system.

[0070] The actions **304**, **306**, and **308** are connected by probability values, such as probability 1 (P1), probability 2 (P2), and probability 3 (P3). The probability values represent probabilities, based on the user's historic incident response behavior, that the user will move from one action to the next. Thus, for example, P1 may have an example value of 0.8, indicating an 80% likelihood that the user will go from action **304** to action **306**. P2 may have an example value of 0.2, indicating a 20% likelihood that the user will go from action **304** to action **308**. P3 may have an example value of 1.0, indicating a 100% likelihood that the user will go from action **306** to action **308**.

[0071] The example actions **304**, **306**, and **308** described herein, and the probabilities P1, P2, and P3 are examples only and a given user journey graph **300** can include any action types, any number of actions, and any probabilities. The user role inference **202** can be configured to identify, based on the historical user response data such as the user response data **132**, common action patterns associated with a user, a group of two or more users, or multiple users, and

user role inference **202** can generate user journey graphs such as user journey graph **300** to represent the identified common action patterns.

[0072] FIG. **4** illustrates example operations of a user-based response recommendation engine **408** in a training stage and in accordance with various aspects of the technologies disclosed herein. FIG. **4** includes the user-based response recommendation engine **408** (in training), the user response data **132** and the incident data **131** introduced in FIG. **1**, the users **141**, **142**, **143** introduced in FIG. **1**, a feature extractor **404**, and probable responses **410**.

[0073] In an example according to FIG. **4**, as security incidents occur in a network, security incident data can be stored in incident data **131**, as described with reference to FIG. **1**. Furthermore, as the users **141**, **142**, **143** take actions in response to the security incidents, the user's **141**, **142**, **143** responsive actions can be stored as user response data **132**, as also described with reference to FIG. **1**. In general, the incident data **131** and the user response data **132** can be used to train the user-based response recommendation engine **408**, so that the user-based response recommendation engine **408** becomes trained to accurately output probable responses **410** which predict the probable responses of different users in response to security incidents.

[0074] A portion of the user response data **132**, identified as historical user response data **402**, can be provided to the user-based response recommendation engine **408** for training. The historical user response data **402** can optionally be pre-processed in order to generate a different historical user response feature vector for each different user, and the historical user response feature vectors can be provided as training inputs to the user-based response recommendation engine **408**.

[0075] The feature extractor **404** can be configured to extract incident features **406** from different security incidents stored in the incident data **131**. The extracted incident features **406** can optionally be pre-processed in order to generate different incident feature vectors for each security incident, and the incident feature vectors can be provided as training inputs to the user-based response recommendation engine **408**.

[0076] In order to train the user-based response recommendation engine **408**, pairs of inputs can be supplied to the user-based response recommendation engine **408**, and the user-based response recommendation engine **408** can be instructed to generate probable responses **410**. The user-based response recommendation engine **408** can be rewarded for generating probable responses that more closely match known actual responses of the users to the security incidents. The pairs of inputs can each comprise an historical user response feature vector and an incident feature vector.

[0077] Another portion of the user response data **132**, identified as historical user response data **412**, can optionally be used to test the accuracy of the probable responses **410**. For example, the historical user response data **412** can comprise a known actual response of a given user to a given security incident. The incident feature vector and that user's historical user response feature vector can be provided as inputs to the user-based response recommendation engine **408**, and the resulting output can be compared to the historical user response data **412**.

[0078] FIG. **5** illustrates example operations of a user-based response recommendation engine **508** in a deployed stage and in accordance with various aspects of the technologies disclosed herein. The user-based response recommendation engine **508** (deployed) can be generated by training the user-based response recommendation engine **408** (in training) described with reference to FIG. **4**, and the user-based response recommendation engine **508** (deployed) can optionally provide the user-based response recommendation engine **220** or the user-based response recommendation engine **122** in some embodiments. FIG. **5** includes the user-based response recommendation engine **508** (deployed), the user response data **132** and the incident data **151** introduced in FIG. **1**, the users **141**, **142**, **143** introduced in FIG. **1**, the feature extractor **404** introduced in FIG. **4**, and a probable response **510**.

[0079] In an example according to FIG. **5**, a new security incident has occurred in the network, and incident data **151** has been obtained therefrom, as described with reference to FIG. **1**. The user response data **132** includes indications of previous actions taken by the users **141**, **142**, **143** in response to security incidents, as also described with reference to FIG. **1**.

[0080] The incident data **151** can be processed by the feature extractor **404**. The feature extractor **404** can extract incident features **506** from the incident data **151**. The extracted incident features **506** can optionally be pre-processed in order to generate an incident feature vector for the security incident represented by incident data **151**, and the incident feature vector can be provided as an input to the user-based response recommendation engine **508**.

[0081] The user tasked with responding to the security incident represented by incident data **151**, e.g., the user **141**, can be identified. The historical user response data **502** can then be obtained from the user response data **132**, wherein the historical user response data **502** comprises user features associated with the user **141**. The historical user response data **502** can optionally be pre-processed in order to generate an historical user response feature vector for the user **141**, and the historical user response feature vector can be provided as an input to the user-based response recommendation engine **508**, along with the incident features **506**.

[0082] The user-based response recommendation engine **508** can be instructed to generate the probable response **510** based on the historical user response data **502** and the incident features **506**. The probable response **510** can comprise, e.g., a more or most probable response by the user **141** to the incident represented by the incident data **151**. The probable response **510** can be included as a response recommendation provided to the user **141**, which recommends actions for the user **141** to take to respond to the incident represented by the incident data **151**.

[0083] FIG. **6** illustrates an example node that can be utilized to implement an endpoint device in a network, in accordance with various aspects of the technologies disclosed herein. In some examples, node **600** may include any number of line cards **602**, e.g., line cards **602**(**1**)-(N), where N may be any integer greater than 1, and wherein the line cards **602** are communicatively coupled to a forwarding engine **610** (also referred to as a packet forwarder) and/or a processor **620** via a data bus **630** and/or a result bus **640**.

[0084] Line cards **602** may include any number of port processors **650**, for example, line card **602**(**1**) comprises port processors **650**(**1**)(A)-**650**(**1**)(N), and line card **602**(N) comprises port processors **650**(N)(A)-**650**(N)(N). The port pro-

cessors **650** can be controlled by port processor controllers **660**, e.g., port processor controllers **660**(**1**), **660**(N), respectively.

[0085] Additionally, or alternatively, the forwarding engine **610** and/or the processor **620** can be coupled to one another via the data bus **630** and the result bus **640** and may also be communicatively coupled to one another by a communications link **670**. The processors (e.g., the port processor(s) **650** and/or the port processor controller(s) **660**) of each line card **602** may optionally be mounted on a single printed circuit board.

[0086] When a packet or packet and header are received, the packet or packet and header may be identified and analyzed by the node **600** in the following manner. Upon receipt, a packet (or some or all of its control information) or packet and header may be sent from one of port processor (s) **650** at which the packet or packet and header was received and to one or more of those devices coupled to the data bus **630** (e.g., others of the port processor(s) **650**, the forwarding engine **610** and/or the processor **620**). Handling of the packet or packet and header may be determined, for example, by the forwarding engine **610**.

[0087] For example, the forwarding engine **610** may determine that the packet or packet and header should be forwarded to one or more of the other port processors **650**. This may be accomplished by indicating to corresponding one(s) of port processor controllers **660** that a copy of the packet or packet and header held in the given one(s) of port processor (s) **650** should be forwarded to the appropriate other one of port processor(s) **650**. Additionally, or alternatively, once a packet or packet and header has been identified for processing, the forwarding engine **610**, the processor **620**, and/or the like may be used to process the packet or packet and header in some manner and/or may add packet security information in order to secure the packet.

[0088] On a node **600** sourcing a packet or packet and header, processing may include, for example, encryption of some or all of the packet or packet and header information, the addition of a digital signature, and/or some other information and/or processing capable of securing the packet or packet and header. On a node **600** receiving a packet or packet and header, the processing may be performed to recover or validate the packet or packet and header information that has been secured.

[0089] FIG. **7** illustrates an example computer hardware architecture that can implement the security system(s) disclosed herein, in accordance with various aspects of the technologies disclosed herein. The illustrated computer hardware architecture can also optionally implement any network endpoint. The computer architecture shown in FIG. **7** illustrates a conventional server computer **700**, however the computer architecture can optionally implement any other computing devices such as a router, a workstation, desktop computer, laptop, tablet, network appliance, e-reader, smartphone, or other computing device. The illustrated computer architecture can be utilized to execute any of the software components presented herein.

[0090] The server computer **700** includes a baseboard **702**, or "motherboard," which is a printed circuit board to which a multitude of components or devices can be connected by way of a system bus or other electrical communication paths. In one illustrative configuration, one or more central processing units ("CPUs") **704** operate in conjunction with a chipset **706**. The CPUs **704** can be standard programmable processors that perform arithmetic and logical operations necessary for the operation of the server computer **700**.

[0091] The CPUs **704** perform operations by transitioning from one discrete, physical state to the next through the manipulation of switching elements that differentiate between and change these states. Switching elements generally include electronic circuits that maintain one of two binary states, such as flip-flops, and electronic circuits that provide an output state based on the logical combination of the states of one or more other switching elements, such as logic gates. These basic switching elements can be combined to create more complex logic circuits, including registers, adders-subtractors, arithmetic logic units, floating-point units, and the like.

[0092] The chipset **706** provides an interface between the CPUs **704** and the remainder of the components and devices on the baseboard **702**. The chipset **706** can provide an interface to a RAM **708**, used as the main memory in the server computer **700**. The chipset **706** can further provide an interface to a computer-readable storage medium such as a read-only memory ("ROM") **710** or non-volatile RAM ("NVRAM") for storing basic routines that help to start up the server computer **700** and to transfer information between the various components and devices. The ROM **710** or NVRAM can also store other software components necessary for the operation of the server computer **700** in accordance with the configurations described herein.

[0093] The server computer **700** can operate in a networked environment using logical connections to remote computing devices and computer systems through a network, such as the LAN **724**. The chipset **706** can include functionality for providing network connectivity through a NIC **712**, such as a gigabit Ethernet adapter. The NIC **712** is capable of connecting the server computer **700** to other computing devices over the LAN **724**. It should be appreciated that multiple NICs **712** can be present in the server computer **700**, connecting the computer to other types of networks and remote computer systems.

[0094] The server computer **700** can be connected to a storage device **718** that provides non-volatile storage for the server computer **700**. The storage device **718** can store an operating system **720**, programs **722**, and data, to implement any of the various components described in detail herein.

[0095] The storage device **718** can be connected to the server computer **700** through a storage controller **714** connected to the chipset **706**. The storage device **718** can comprise one or more physical storage units. The storage controller **714** can interface with the physical storage units through a serial attached SCSI ("SAS") interface, a serial advanced technology attachment ("SATA") interface, a fiber channel ("FC") interface, or other type of interface for physically connecting and transferring data between computers and physical storage units.

[0096] The server computer **700** can store data on the storage device **718** by transforming the physical state of the physical storage units to reflect the information being stored. The specific transformation of physical state can depend on various factors, in different embodiments of this description. Examples of such factors can include, but are not limited to, the technology used to implement the physical storage units, whether the storage device **718** is characterized as primary or secondary storage, and the like.

[0097] For example, the server computer **700** can store information to the storage device **718** by issuing instructions

through the storage controller **714** to alter the magnetic characteristics of a particular location within a magnetic disk drive unit, the reflective or refractive characteristics of a particular location in an optical storage unit, or the electrical characteristics of a particular capacitor, transistor, or other discrete component in a solid-state storage unit. Other transformations of physical media are possible without departing from the scope and spirit of the present description, with the foregoing examples provided only to facilitate this description. The server computer **700** can further read information from the storage device **718** by detecting the physical states or characteristics of one or more particular locations within the physical storage units.

[0098] In addition to the mass storage device **718** described above, the server computer **700** can have access to other computer-readable storage media to store and retrieve information, such as program modules, data structures, or other data. It should be appreciated by those skilled in the art that computer-readable storage media is any available media that provides for the non-transitory storage of data and that can be accessed by the server computer **700**. In some examples, the operations performed by the computing elements illustrated in FIGS. **1-5**, and or any components included therein, may be supported by one or more devices similar to server computer **700**.

[0099] By way of example, and not limitation, computer-readable storage media can include volatile and non-volatile, removable and non-removable media implemented in any method or technology. Computer-readable storage media includes, but is not limited to, RAM, ROM, erasable programmable ROM ("EPROM"), electrically-erasable programmable ROM ("EEPROM"), flash memory or other solid-state memory technology, compact disc ROM ("CD-ROM"), digital versatile disk ("DVD"), high definition DVD ("HD-DVD"), BLU-RAY, or other optical storage, magnetic cassettes, magnetic tape, magnetic disk storage or other magnetic storage devices, or any other medium that can be used to store the desired information in a non-transitory fashion.

[0100] As mentioned briefly above, the storage device **718** can store an operating system **720** utilized to control the operation of the server computer **700**. According to one embodiment, the operating system comprises the LINUX operating system. According to another embodiment, the operating system comprises the WINDOWS® SERVER operating system from MICROSOFT Corporation of Redmond, Washington. According to further embodiments, the operating system can comprise the UNIX operating system or one of its variants. It should be appreciated that other operating systems can also be utilized. The storage device **718** can store other system or application programs and data utilized by the server computer **700**.

[0101] In one embodiment, the storage device **718** or other computer-readable storage media is encoded with computer-executable instructions which, when loaded into the server computer **700**, transform the computer from a general-purpose computing system into a special-purpose computer capable of implementing the embodiments described herein. These computer-executable instructions transform the server computer **700** by specifying how the CPUs **704** transition between states, as described above.

[0102] According to one embodiment, the server computer **700** has access to computer-readable storage media storing computer-executable instructions which, when executed by the server computer **700**, can implement the architectures and perform the various processes described with regard to FIGS. **8-12**. The server computer **700** can also include computer-readable storage media having instructions stored thereupon for performing any of the other computer-implemented operations described herein.

[0103] The server computer **700** can also include one or more input/output controllers **716** for receiving and processing input from a number of input devices, such as a keyboard, a mouse, a touchpad, a touch screen, an electronic stylus, or other type of input device. Similarly, an input/output controller **716** can provide output to a display, such as a computer monitor, a flat panel display, a digital projector, a printer, or other type of output device. It will be appreciated that the server computer **700** might not include all of the components shown in FIG. **7**, can include other components that are not explicitly shown in FIG. **7**, or might utilize an architecture completely different than that shown in FIG. **7**.

[0104] FIG. **8** illustrates an example user role inference architecture **800**, in accordance with various aspects of the technologies disclosed herein. The illustrated architecture **800** can be implemented by a computing device, such as the server computer **700**. The logical operations described herein with respect to FIG. **8** may be implemented (1) as a sequence of computer-implemented acts or program modules running on a computing system and/or (2) as interconnected machine logic circuits or circuit modules within the computing system. In some examples, the architecture **800** may be performed by a system comprising one or more processors and one or more non-transitory computer-readable media storing computer-executable instructions that, when executed by the one or more processors, cause the one or more processors to perform operations of the illustrated components.

[0105] The implementation of the various components described herein is a matter of choice dependent on the performance and other requirements of the computing system. Accordingly, the logical operations described herein are referred to variously as operations, structural devices, acts, or modules. These operations, structural devices, acts, and modules can be implemented in software, in firmware, in special purpose digital logic, and any combination thereof.

[0106] The example architecture **800** includes, "collect historical user response data associated with multiple users and formatted as a list of triples (user id, action id, incident id)" at module **802**, followed by "cluster users into k groups based on their historical user response data" at module **804**, followed by "security domain experts check user journey graphs and assign different roles to above K groups of users" at module **818**.

[0107] Module **804** includes, "extract features and represent each user as a vector of float numbers" at module **806**, followed by "determine the number of clusters K and then cluster users into k groups by k-means clustering" at module **812**. Module **812** can output groups, such as group **814**A, group **814**B, and group **814**C, wherein each group can comprise a cluster of similar users. The architecture **800** can draw user journey graphs based on each group's historical user response data, e.g., draw user journey graph **816**A, draw user journey graph **816**B, and draw user journey graph **816**C. The resulting user journey graphs can be provided to module **818**.

[0108] Module **806** includes, "for any (user ID=U, action=A) pair, estimate the probability of user U's performing the action A in responding to incidents based on user U's historical user response data" at module **808**, and, "for any (user ID=U, action=A) pair, estimate the probability of user U's performing the action A in responding to incidents based on user U's historical user response data," at module **810**.

[0109] FIG. **9** illustrates an example user-based response recommendation architecture **900**, in accordance with various aspects of the technologies disclosed herein. The illustrated architecture **900** can be implemented by a computing device, such as the server computer **700**. The logical operations described herein with respect to FIG. **9** may be implemented (1) as a sequence of computer-implemented acts or program modules running on a computing system and/or (2) as interconnected machine logic circuits or circuit modules within the computing system. In some examples, the architecture **900** may be performed by a system comprising one or more processors and one or more non-transitory computer-readable media storing computer-executable instructions that, when executed by the one or more processors, cause the one or more processors to perform operations of the illustrated components.

[0110] The implementation of the various components described herein is a matter of choice dependent on the performance and other requirements of the computing system. Accordingly, the logical operations described herein are referred to variously as operations, structural devices, acts, or modules. These operations, structural devices, acts, and modules can be implemented in software, in firmware, in special purpose digital logic, and any combination thereof.

[0111] The example architecture **900** includes training modules and operations configured to train the trained model(s) **932**, as well as deployed modules and operations which make use of the trained model(s) **932** to generate predicted response(s) **934**. During a training stage, historical user response data associated with multiple users **902** can be processed to extract user features **904**, resulting in user feature vectors **906**. Security incident events **908** can also be processed to extract incident features **910**, resulting in incident feature vectors **912**. The user feature vectors **906** and the incident feature vectors **912** can be combined into concatenated feature vectors **915**. The concatenated feature vectors **915** can be used by training processes **916** to train models **917**, resulting in trained models **932**.

[0112] Furthermore, during the training stage, the historical user response data associated with multiple users **902** can be processed to extract labels **907** representing user actions in response to incidents. The extracted labels **907** can be provided to the training processes **916** for use in connection with operations to train models **917**. The concatenated feature vectors **915** can be saved **918** in a user feature database **924**.

[0113] After the training stage, the trained models **932** can be used to assist in responding to security incidents. An example new security incident event assigned to a user **920** can be processed to extract user features **922** from the user feature database **924**, resulting in a user feature vector **928**. The new security incident event assigned to a user **920** can furthermore be processed to extract incident features **926** from the new security incident event, resulting in an incident feature vector **930**. The user feature vector **928** and the incident feature vector **930** can be provided as inputs to the trained models **932**, and the trained models **932** can generate, based on the inputs, an output comprising predicted response(s) **934** of the user to the new security incident event.

[0114] FIGS. **10**, **11**, and **12** are flow diagrams of example methods **1000**, **1100**, **1200** performed at least partly by a computing device, such as the server computer **700**. The logical operations described herein with respect to FIGS. **10**, **11**, and **12** may be implemented (1) as a sequence of computer-implemented acts or program modules running on a computing system and/or (2) as interconnected machine logic circuits or circuit modules within the computing system. In some examples, the methods **1000**, **1100**, **1200** may be performed by a system comprising one or more processors and one or more non-transitory computer-readable media storing computer-executable instructions that, when executed by the one or more processors, cause the one or more processors to perform the methods **1000**, **1100**, **1200**.

[0115] The implementation of the various components described herein is a matter of choice dependent on the performance and other requirements of the computing system. Accordingly, the logical operations described herein are referred to variously as operations, structural devices, acts, or modules. These operations, structural devices, acts, and modules can be implemented in software, in firmware, in special purpose digital logic, and any combination thereof.

[0116] It should also be appreciated that more or fewer operations might be performed than shown in FIGS. **10**, **11**, and **12** and described herein. These operations can also be performed in parallel, or in a different order than those described herein. Some or all of these operations can also be performed by components other than those specifically identified. Although the techniques described in this disclosure are with reference to specific components, in other examples, the techniques may be implemented by fewer components, more components, different components, or any configuration of components.

[0117] FIG. **10** is a flow diagram that illustrates an example method performed in connection with user role inference, in accordance with various aspects of the technologies disclosed herein. In an example embodiment, the illustrated method can be performed at a server computer **700** comprising security system(s) **200** such as illustrated in FIG. **2**. At operation **1002**, the user role inference **202** can obtain historical user response data, e.g., from the user response data **132**, associated with multiple users **210**, **212**, **214**, **216**. The historical user response data can comprise indications of previous responses by the multiple users **210**, **212**, **214**, **216** to previous security incidents.

[0118] In some embodiments, the historical user response data obtained at operation **1002** can comprise data indicative of user actions such as quarantine actions, system recovery actions, IP address blocking actions, and/or hostname blocking actions. Alternatively, or additionally, the historical user response data can comprise data indicative of user actions such as a ticket creation action, a resource requirement action, a tab click action, and/or a hold for future processing action.

[0119] At operation **1004**, the user role inference **202** can cluster users of the multiple users **210**, **212**, **214**, **216** based on the historical user response data, resulting in two or more different user clusters, e.g., the cluster **204** and the cluster **206**. The clustering at operation **1004** can comprise the operations **1006**, **1008**, **1010**, and **1012**.

[0120] At operation **1006**, the user role inference **202** can identify, based on the historical user response data, a first common action pattern exhibited in historical user response data associated with a first two or more users of the multiple users **210**, **212**, **214**, **216**, e.g., the users **210** and **212**. At operation **1008**, the user role inference **202** can include the first two or more users **210**, **212** of the multiple users **210**, **212**, **214**, **216** in a first user cluster **204** of the two or more different user clusters **204**, **206**.

[0121] At operation **1010**, the user role inference **202** can identify, based on the historical user response data, a second common action pattern exhibited in historical user response data associated with a second two or more users of the multiple users **210**, **212**, **214**, **216**, e.g., the users **214** and **216**. At operation **1012**, the user role inference **202** can include the second two or more users **214** and **216** of the multiple users **210**, **212**, **214**, **216** in a second user cluster **206** of the two or more different user clusters **204**, **206**.

[0122] In some embodiments, operations **1006**, **1008**, **1010**, and **1012** can comprise representing respective users of the multiple users **210**, **212**, **214**, **216** as respective probability vectors, each respective probability vector comprising respective probabilities that a respective user will perform a respective action in response to a respective security incident of the previous security incidents. A clustering technique, e.g., k-means clustering or otherwise, can then be applied to cluster the respective probability vectors, resulting in the user clusters, and common action patterns can be identified based on the aggregate probability vectors in a given user cluster. User journey graphs, e.g., a first and second user journey graph, can then optionally be generated based on the first and second common action patterns.

[0123] Subsequent to clustering the multiple users **210**, **212**, **214**, **216** into clusters **204**, **206**, at operation **1014** the user role inference **202** can identify, based on the common action patterns, user role labels, e.g., roles **205**, **207** for the user clusters **204**, **206**. More particularly, the user role inference **202** can identify, based on the first common action pattern, a first user role label, e.g., role **205** for the first user cluster **204**, and the user role inference **202** can identify, based on the second common action pattern, a second user role label, e.g., role **207** for the second user cluster **206**. The first user role **205** can identify for example a less experienced user role, and the second user role **207** can identify for example a more experienced user role. At operation **1016**, the user role inference **202** can apply the user role labels, e.g., roles **205**, **207** to the user clusters **204**, **206**, e.g., by applying the label of the first user role **205** to the first user cluster **204** and applying the label of the second user role **207** to the second user cluster **206**.

[0124] Once generated, the labeled first user cluster **204** and second user cluster **206** can optionally be used as inputs to a response recommendation process such as illustrated for example in FIG. **10**. The response recommendation process can be adapted to recommend a future response, by a user of the multiple users **210**, **212**, **214**, **216**, to a future security incident as described herein.

[0125] FIG. **11** is a flow diagram that illustrates an example method performed in connection with training of a user-based response recommendation engine, in accordance with various aspects of the technologies disclosed herein. In an example embodiment, the illustrated method can be performed at a server computer **700** comprising security system(s) **200** such as illustrated in FIG. **2**. Alternatively, training can optionally be performed at a different computing device outside of the security system(s) **200**.

[0126] At operation **1102**, the security system(s) **200** can obtain historical incident data, e.g., from incident data **131**, associated with previous security incidents **170** affecting a network **100**. In some embodiments, the historical incident data can comprise or can be used to generate a respective incident feature vector associated with each respective previous security incident of the previous security incidents **170**. The respective incident feature vectors can comprise, e.g., binary vectors including representations of security incident descriptions.

[0127] At operation **1104**, the security system(s) **200** can obtain first historical user response data, e.g., from the user response data **132**. The first historical user response data can be associated with a first user of the security system(s) **200**, e.g., user **214**. The first historical user response data can comprise indications of previous responses by the first user **214** to the previous security incidents obtained at operation **1102**. In some embodiments, the first historical user response data can comprise or can be used to generate a first historical user response feature vector associated with the first user **214**.

[0128] At operation **1106**, the security system(s) **200** can obtain second historical user response data, e.g., from the user response data **132**. The second historical user response data can be associated with a second user of the security system(s) **200**, e.g., user **216**. The second historical user response data can comprise indications of previous responses by the second user **216** to the previous security incidents obtained at operation **1102**. In some embodiments, the second historical user response data can comprise or can be used to generate a second historical user response feature vector associated with the second user **216**.

[0129] At operation **1108**, the security system(s) **200** can use the historical incident data obtained at operation **1102**, the first historical user response data obtained at operation **1104**, and the second historical user response data obtained at operation **1106** to train a supervised machine learning model, thereby generating a trained supervised machine learning model such as the user-based response recommendation engine **220**.

[0130] The user-based response recommendation engine **220** can be configured to predict, based on subsequently acquired incident data such as incident data **251**, **252**, or **253**, and third historical user response data stored in the user response data **132**, probable responses by third users of the security system(s) **200**, e.g., any of users **210**, **212**, **214**, or **216**, to subsequent security incidents associated with the subsequently acquired incident data **251**, **252**, or **253**. The probable responses predicted by the user-based response recommendation engine **220** can include, e.g., one or more of a quarantine, a system recovery, blocking an IP address, blocking a hostname, or other actions described herein.

[0131] Once the user-based response recommendation engine **220** is trained, at operation **1110** the resulting trained supervised machine learning model can be employed to predict, based on the subsequently acquired incident data **251**, **252**, or **253** and the third historical user response data, probable responses by the third users in order to configure response recommendations for the subsequent security incidents represented by incident data **251**, **252**, or **253**. Operations of the user-based response recommendation engine **220** are described further with reference to FIG. **12**.

[0132] FIG. **12** is a flow diagram that illustrates an example method performed in connection the use of a deployed a user-based response recommendation engine, in accordance with various aspects of the technologies disclosed herein. In an example embodiment, the illustrated method can be performed at a server computer **700** comprising security system(s) **200** such as illustrated in FIG. **2**.

[0133] Prior to performing the method illustrated in FIG. **12**, a supervised machine learning model can be trained, e.g., as illustrated in FIG. **11**, resulting in a trained supervised machine learning model that implements the user-based response recommendation engine **220**. The trained supervised machine learning model can be trained using historical user response data stored in user response data **132**, and historical incident data stored associated with previous security incidents and stored in incident data **131**.

[0134] At operation **1202**, the security system(s) **200** can identify a security incident within the network **100**, e.g., an incident represented by incident data **251**. At operation **1204**, the security system(s) **200** can generate a response recommendation for a user, e.g., response recommendation **226** for user **216**. The response recommendation **226** can recommend a response by the user **216** to the security incident represented by incident data **251**. Generating the response recommendation can comprise operations **1206**, **1208**, and **1210**.

[0135] At operation **1206**, the security system(s) **200** can obtain the incident data **251** associated with the security incident. The incident data **251** can comprise an incident feature vector, or an incident feature vector can be constructed from the incident data **251**. The incident feature vector can comprise, e.g., a binary vector including a representation of a description of the security incident.

[0136] At operation **1208**, the security system(s) **200** can obtain historical user response data associated with the user **216**. For example, the security system(s) **200** can obtain historical user response data from user response data **132**. The historical user response data can comprise indications of previous responses by the user **216** to previous security incidents, e.g., previous incidents stored in the incident data **131**. In some embodiments, the historical user response data can comprise a historical user response feature vector, or a historical user response feature vector can be generated therefrom.

[0137] At operation **1210**, the security system(s) **200** can predict, based on the incident data **251** and the historical user response data obtained at operation **1208**, a probable response by the user **216** to the security incident, wherein the response recommendation **226** for the user **216** comprises the probable response. Predicting the probable response by the user **216** to the security incident can comprise providing the incident data **251** and the historical user response data as inputs to a trained supervised machine learning model, e.g., to the user-based response recommendation engine **220**.

[0138] In some embodiments, the response recommendation **226** can include one or more of a quarantine, a system recovery, blocking an IP address, or blocking a hostname. It should be understood that the response recommendation **226** for the user **216** can be different from an alternate response recommendation **224** generated by the security system(s) **200**, or an alternate response recommendation **224** that would otherwise be generated by the security system(s) **200**, for an alternate user, e.g., for user **214**, wherein the alternate response recommendation **224** recommends an alternate response by the alternate user **214** to the security incident.

[0139] While the invention is described with respect to the specific examples, it is to be understood that the scope of the invention is not limited to these specific examples. Since other modifications and changes varied to fit particular operating requirements and environments will be apparent to those skilled in the art, the invention is not considered limited to the example chosen for purposes of disclosure and covers all changes and modifications which do not constitute departures from the true spirit and scope of this invention.

[0140] Although the application describes embodiments having specific structural features and/or methodological acts, it is to be understood that the claims are not necessarily limited to the specific features or acts described. Rather, the specific features and acts are merely illustrative some embodiments that fall within the scope of the claims of the application.

What is claimed is:

1. A method, comprising:

identifying, by a security system within a network, a security incident within the network; and

generating, by the security system, a response recommendation for a user, wherein the response recommendation recommends a response by the user to the security incident, and wherein generating the response recommendation comprises:

obtaining incident data associated with the security incident;

obtaining historical user response data associated with the user, wherein the historical user response data comprises indications of previous responses by the user to previous security incidents; and

predicting, based on the incident data and the historical user response data, a probable response by the user to the security incident, wherein the response recommendation for the user comprises the probable response.

2. The method of claim **1**, wherein predicting the probable response by the user to the security incident comprises providing the incident data and the historical user response data as inputs to a trained supervised machine learning model.

3. The method of claim **2**, wherein the incident data comprises an incident feature vector, and wherein the historical user response data comprises a historical user response feature vector.

4. The method of claim **3**, wherein the incident feature vector comprises a binary vector including a representation of a description of the security incident.

5. The method of claim **2**, further comprising using the historical user response data and historical incident data associated with previous security incidents to train the trained supervised machine learning model.

6. The method of claim **1**, wherein the response recommendation includes one or more of a quarantine, a system recovery, blocking an internet protocol address, or blocking a hostname.

7. The method of claim **1**, wherein the response recommendation for the user is different from an alternate response recommendation generated by the security system for an alternate user, wherein the alternate response recommendation recommends an alternate response by the alternate user to the security incident.

8. A device comprising:

one or more processors;

one or more non-transitory computer-readable media storing computer-executable instructions that, when executed by the one or more processors, cause the one or more processors to perform operations comprising:

identifying, by a security system within a network, a security incident within the network; and

generating, by the security system, a response recommendation for a user, wherein the response recommendation recommends a response by the user to the security incident, and wherein generating the response recommendation comprises:

obtaining incident data associated with the security incident;

obtaining historical user response data associated with the user, wherein the historical user response data comprises indications of previous responses by the user to previous security incidents; and

predicting, based on the incident data and the historical user response data, a probable response by the user to the security incident, wherein the response recommendation for the user comprises the probable response.

9. The device of claim **8**, wherein predicting the probable response by the user to the security incident comprises providing the incident data and the historical user response data as inputs to a trained supervised machine learning model.

10. The device of claim **9**, wherein the incident data comprises an incident feature vector, and wherein the historical user response data comprises a historical user response feature vector.

11. The device of claim **10**, wherein the incident feature vector comprises a binary vector including a representation of a description of the security incident.

12. The device of claim **9**, further comprising using the historical user response data and historical incident data associated with previous security incidents to train the trained supervised machine learning model.

13. The device of claim **8**, wherein the response recommendation includes one or more of a quarantine, a system recovery, blocking an internet protocol address, or blocking a hostname.

14. The device of claim **8**, wherein the response recommendation for the user is different from an alternate response recommendation generated by the security system for an alternate user, wherein the alternate response recommendation recommends an alternate response by the alternate user to the security incident.

15. A method comprising:

obtaining historical incident data associated with previous security incidents affecting a network;

obtaining first historical user response data associated with a first user of a security system for the network, wherein the first historical user response data comprises indications of previous responses by the first user to the previous security incidents;

obtaining second historical user response data associated with a second user of the security system, wherein the second historical user response data comprises indications of previous responses by the second user to the previous security incidents; and

using the historical incident data, the first historical user response data, and the second historical user response data to train a supervised machine learning model, thereby generating a trained supervised machine learning model configured to predict, based on subsequently acquired incident data and third historical user response data, probable responses by third users of the security system to subsequent security incidents associated with the subsequently acquired incident data.

16. The method of claim **15**, wherein the historical incident data comprises a respective incident feature vector associated with each respective previous security incident of the previous security incidents, wherein the first historical user response data comprises a first historical user response feature vector associated with the first user, and wherein the second historical user response data comprises a second historical user response feature vector associated with the second user.

17. The method of claim **16**, wherein the respective incident feature vector comprises a binary vector including a representation of a description of the security incident.

18. The method of claim **15**, wherein the third users comprise at least one of the first user or the second user.

19. The method of claim **15**, wherein the probable responses include one or more of a quarantine, a system recovery, blocking an internet protocol address, or blocking a hostname.

20. The method of claim **15**, further comprising employing the trained supervised machine learning model to predict, based on the subsequently acquired incident data and the third historical user response data, the probable responses by the third users, in order to configure response recommendations for the subsequent security incidents.

* * * * *