US 20250257685A1

(19) United States

(12) Patent Application Publication

Niergarth et al.

(10) Pub. No.: US 2025/0257685 A1

(43) Pub. Date: Aug. 14, 2025

(54) GAS TURBINE ENGINE

(71) Applicants: **General Electric Company**, Evendale, OH (US); **GE Avio S.r.l.**, Rivalta di Torino (IT)

(72) Inventors: **Daniel Alan Niergarth**, Norwood, OH (US); **Jorge de Luis**, Cincinnati, OH (US); **Douglas Downey Turner**, West Chester, OH (US); **Michael Macrorie**, Winchester, MA (US); **Keith W. Wilkinson**, Portsmouth, NH (US); **Arthur William Sibbach**, Boxford, MA (US); **Vincenzo Martina**, Turin (IT)

(21) Appl. No.: **19/098,652**

(22) Filed: **Apr. 2, 2025**

Related U.S. Application Data

(63) Continuation-in-part of application No. 18/976,748, filed on Dec. 11, 2024, which is a continuation of application No. 18/650,586, filed on Apr. 30, 2024, now Pat. No. 12,196,131, which is a continuation-in-part of application No. 18/500,517, filed on Nov. 2, 2023, now Pat. No. 12,078,107, which is a continuation of application No. 18/481,515, filed on Oct. 5, 2023, which is a continuation-in-part of application No. 17/978,629, filed on Nov. 1, 2022, now abandoned.

Publication Classification

(51) **Int. Cl.**
F02C 6/06 (2006.01)
F02C 7/18 (2006.01)

(52) **U.S. Cl.**
CPC ***F02C 6/06*** (2013.01); ***F02C 7/185*** (2013.01); *F05D 2260/213* (2013.01)

(57) **ABSTRACT**

A gas turbine engine is provided having a turbomachine comprising a compressor section, a combustion section, and a turbine section arranged in serial flow order, the compressor section having a high pressure compressor defining a high pressure compressor exit area ($A_{HPCExit}$) in square inches and the turbine section having a drive turbine defining a drive turbine exit area (A_{DTExit}) in square inches, the turbomachine further comprising a drive turbine shaft coupled to the drive turbine; wherein the gas turbine engine defines a maximum exhaust gas temperature (EGT) in degrees Celsius, a maximum drive turbine shaft torque (T_{OUT}) in Newton meters, and a corrected specific power (CSP) in Newtons squared times degrees Celsius over meters squared, wherein the corrected specific power is determined as follows:

$$\left(\frac{T_{OUT}}{\sqrt{A_{DTExit}}}\right)^2 * \frac{EGT}{A_{HPCExit}} * 10^{-11};$$

wherein CSP is greater than $0.0001194 \times EGT^2 - 0.103 \times EGT + 22.14$ and less than $0.0003294 \times EGT^2 - 0.306 \times EGT + 77.91$; and wherein EGT is greater than 525 degrees Celsius and less than 1250 degrees Celsius.

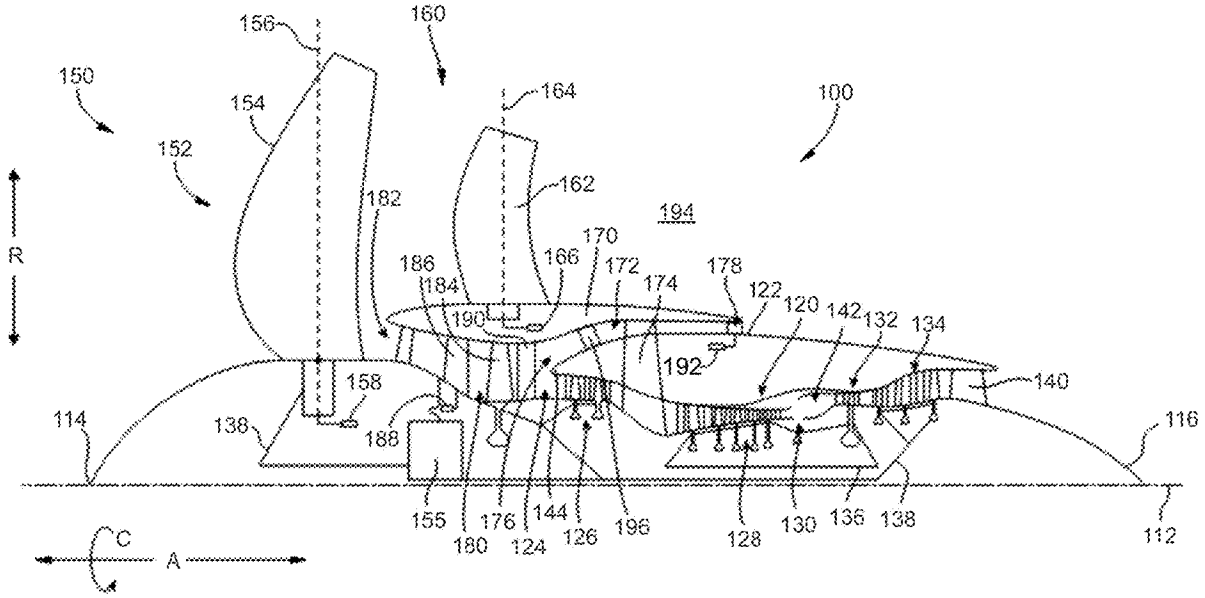

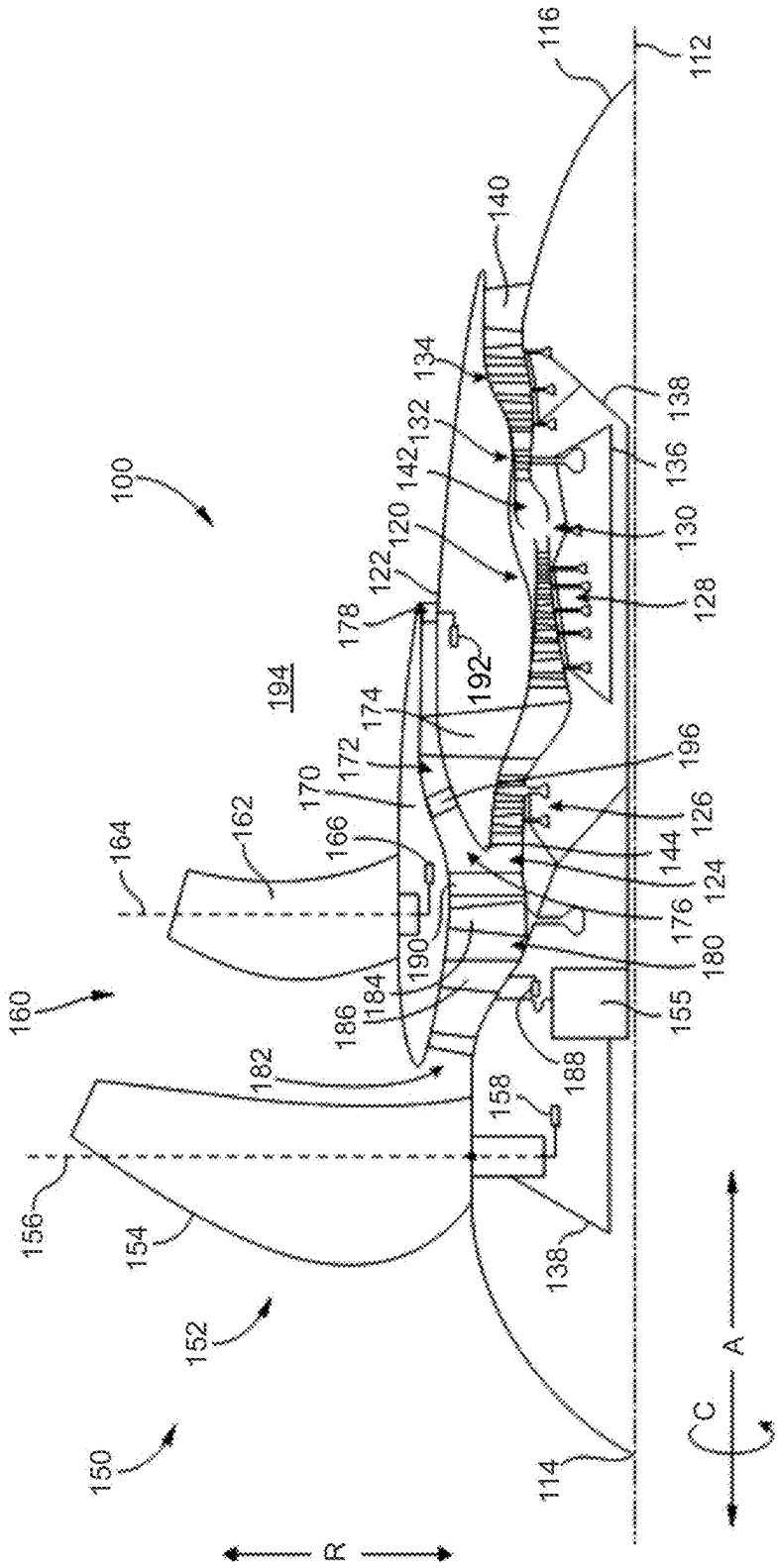
100
112
114
116
120
122
124
126
128
130
132
134
136
138
140
142
144
150
152
154
155
156
158
160
162
164
166
170
172
174
176
178
180
182
184
186
188
190
192
194
196
A
C
R

FIG. 1

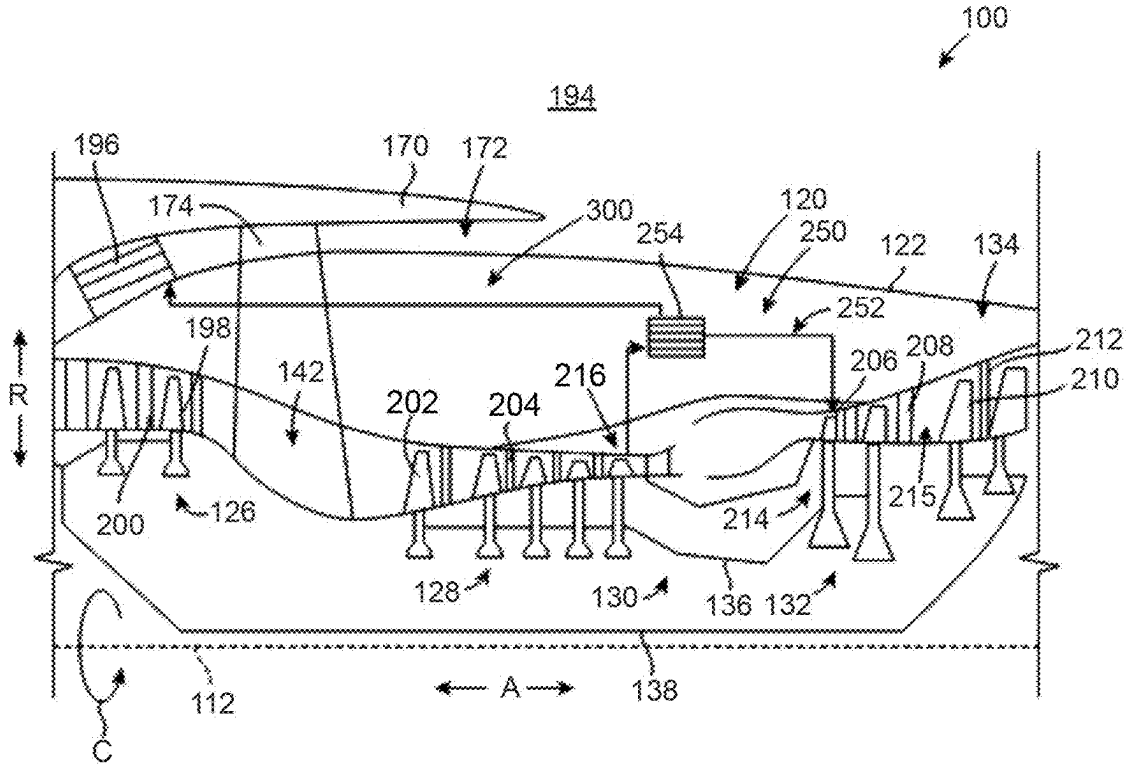
100
194
196
170
172
174
300
254
120
250
122
134
252
198
142
216
206
208
212
210
R
202
204
200
126
214
215
128
130
136
132
112
A
138
C

FIG. 2

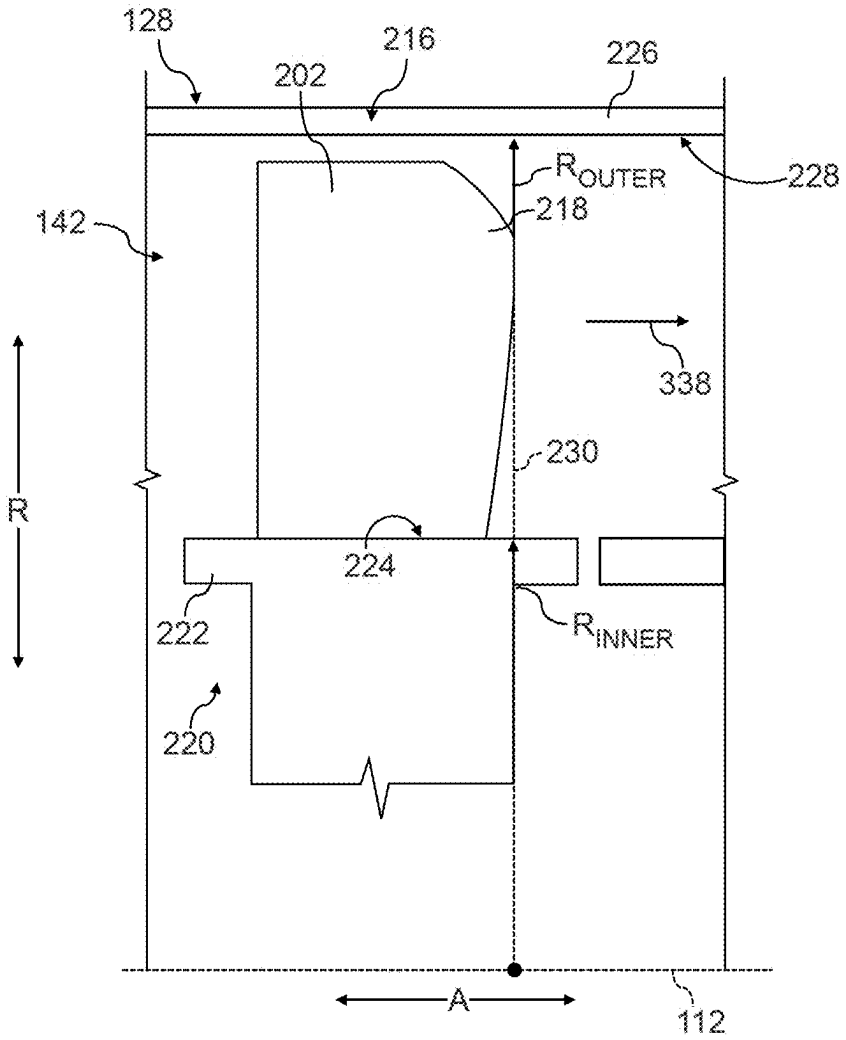
128
216
226
202
228
R_{OUTER}
218
142
338
230
R
224
222
R_{INNER}
220
A
112

FIG. 3

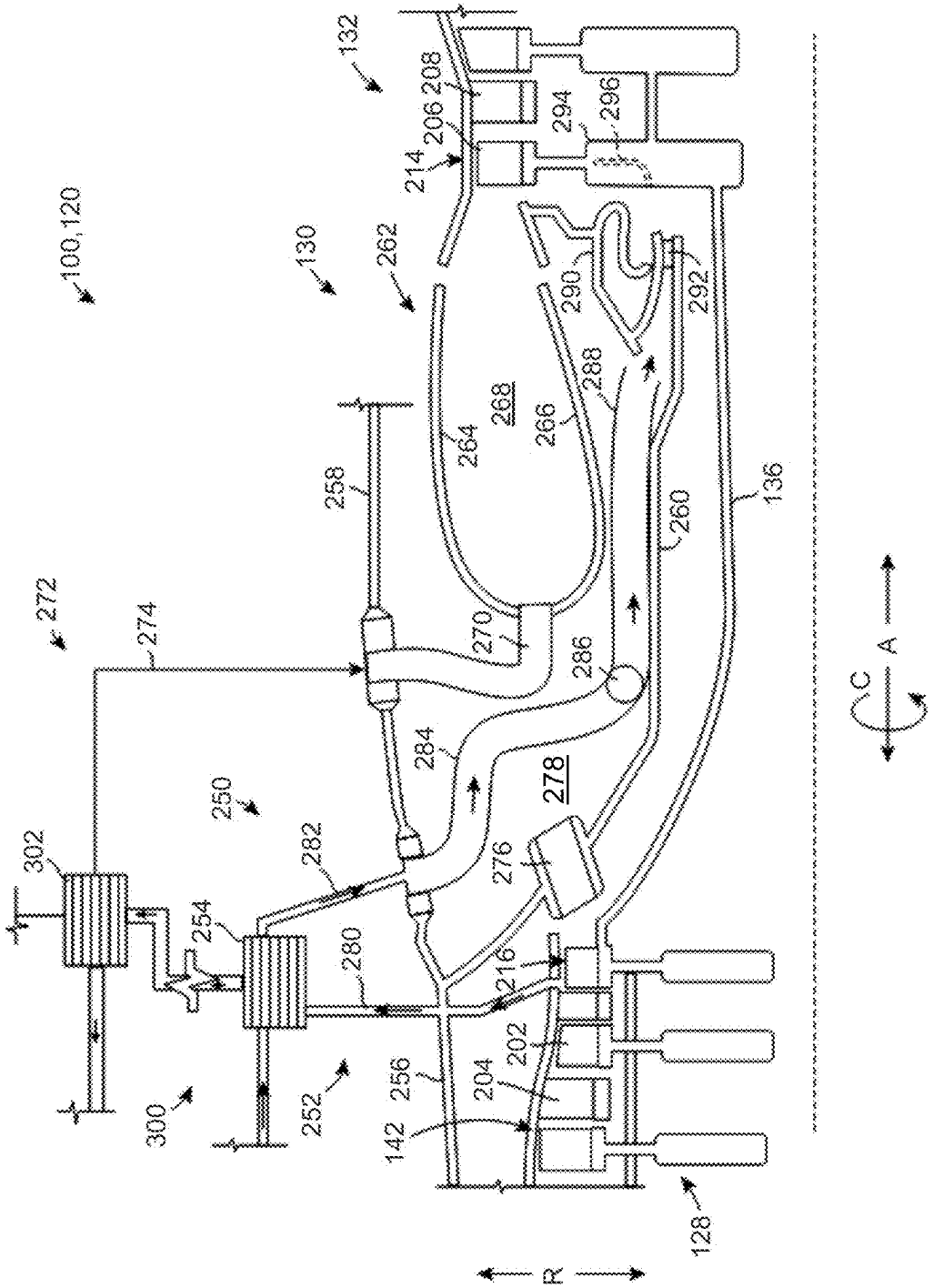
100,120
130
132
136
142
128
250
252
254
256
258
260
262
264
266
268
270
272
274
276
278
280
282
284
286
288
290
292
294
296
300
302
202
204
206
208
214
216
R
A
C

FIG. 4

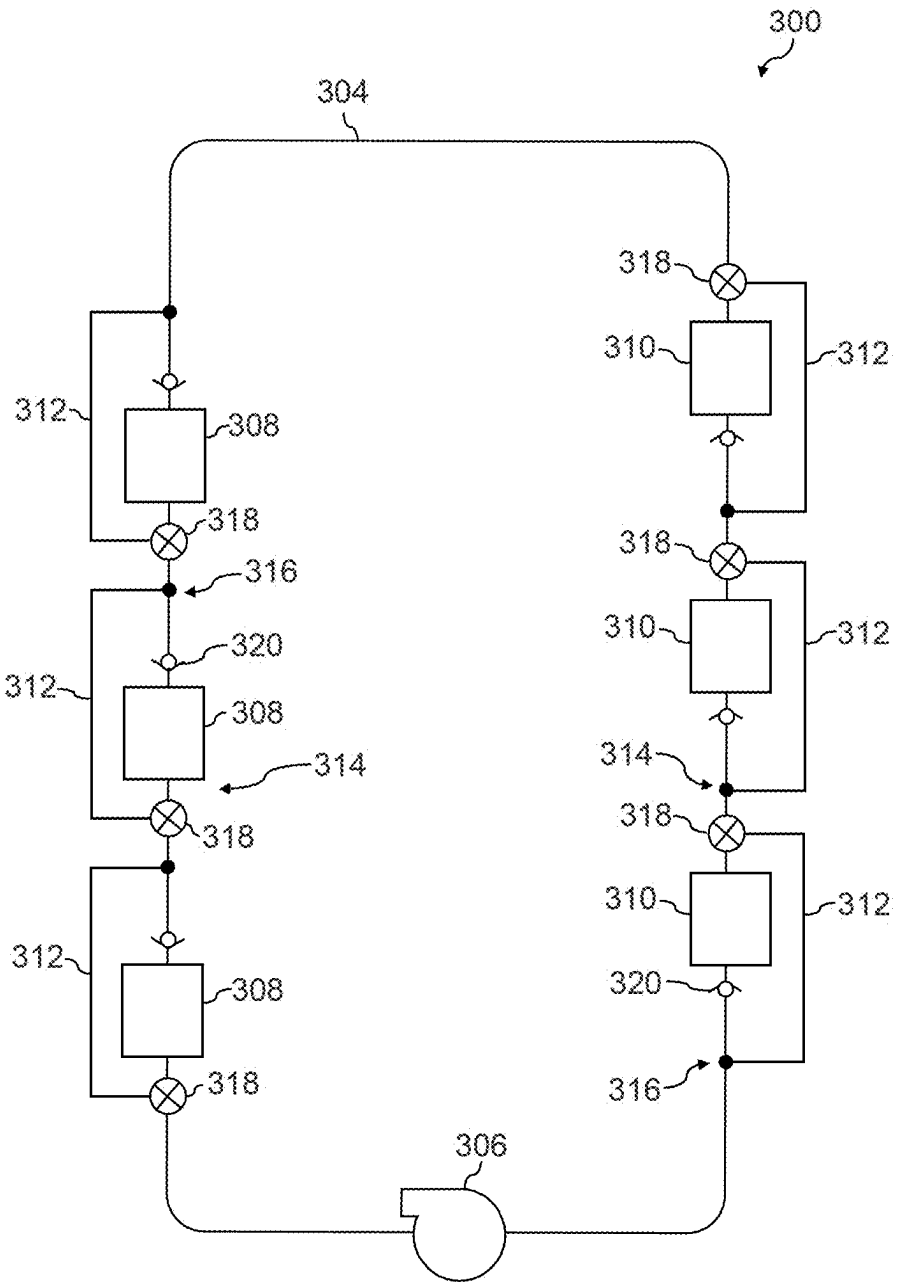
300
304
318
310
312
312
308
318
316
318
310
312
320
312
308
314
314
318
318
310
312
312
308
320
318
316
306

FIG. 5

HPC EXIT AREA	REDLINE EGT	SLS THRUST	CST
29.1	1153	39262	53.6
27.1	1205	39258	64.5
28.4	1071	39292	52.2
26.1	1123	39288	64.6
24.7	1160	39285	74.5
26.2	1155	39262	66.2
27.0	1207	39257	64.9
27.0	1125	39289	60.6
24.6	1161	39285	75.0
29.1	1152	39262	53.3
28.4	1071	39292	52.1
27.0	1123	39287	60.3

FIG. 6

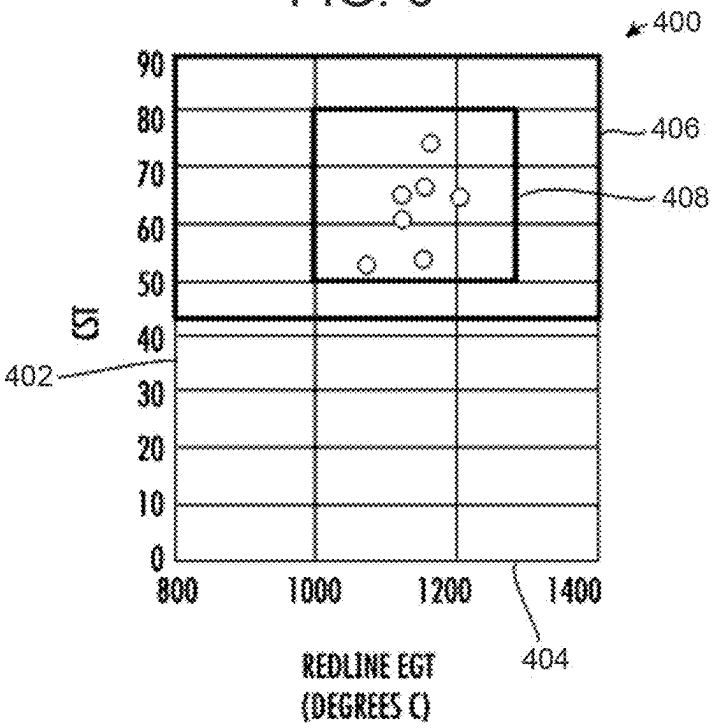

FIG. 7

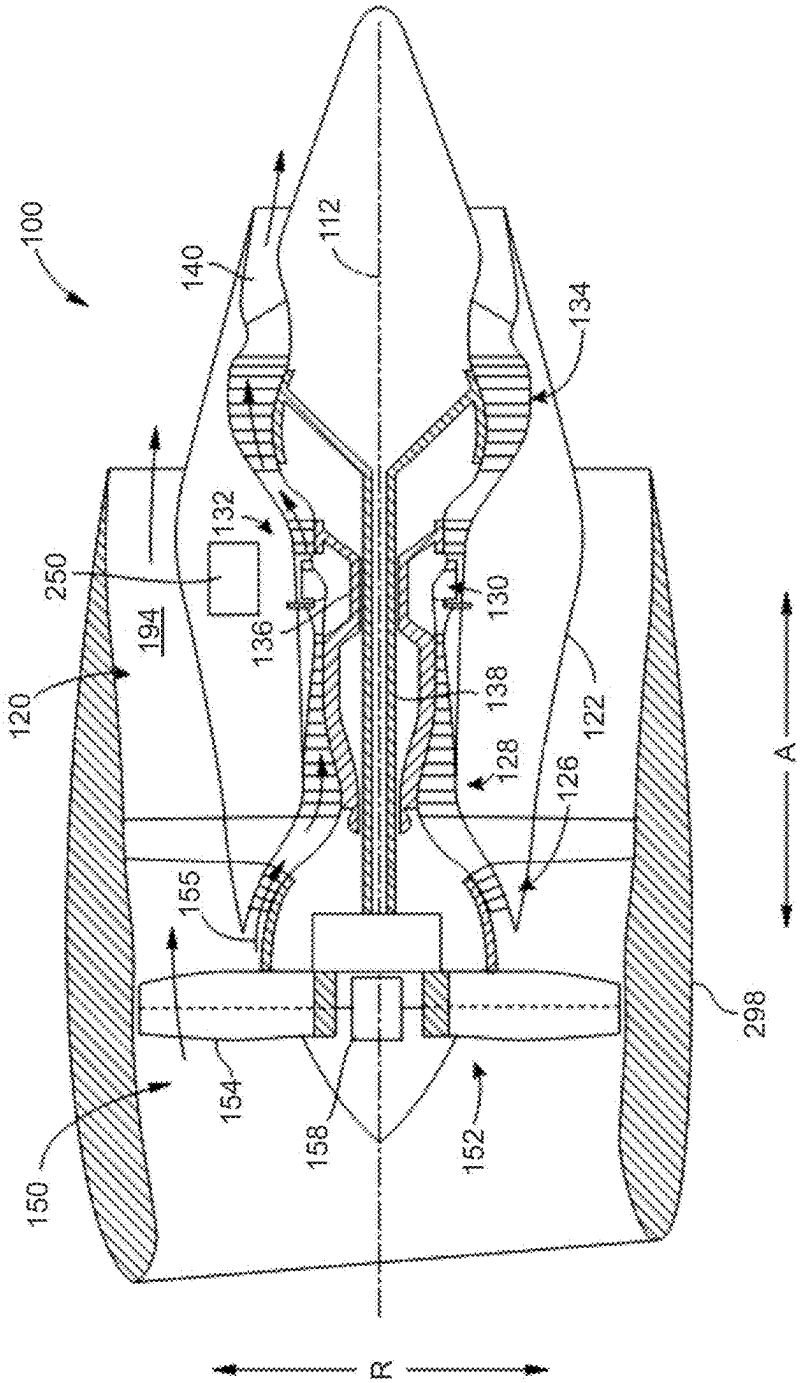
100
140
112
134
132
250
194
136
130
120
138
122
128
126
155
A
298
154
158
152
150
R

FIG. 8

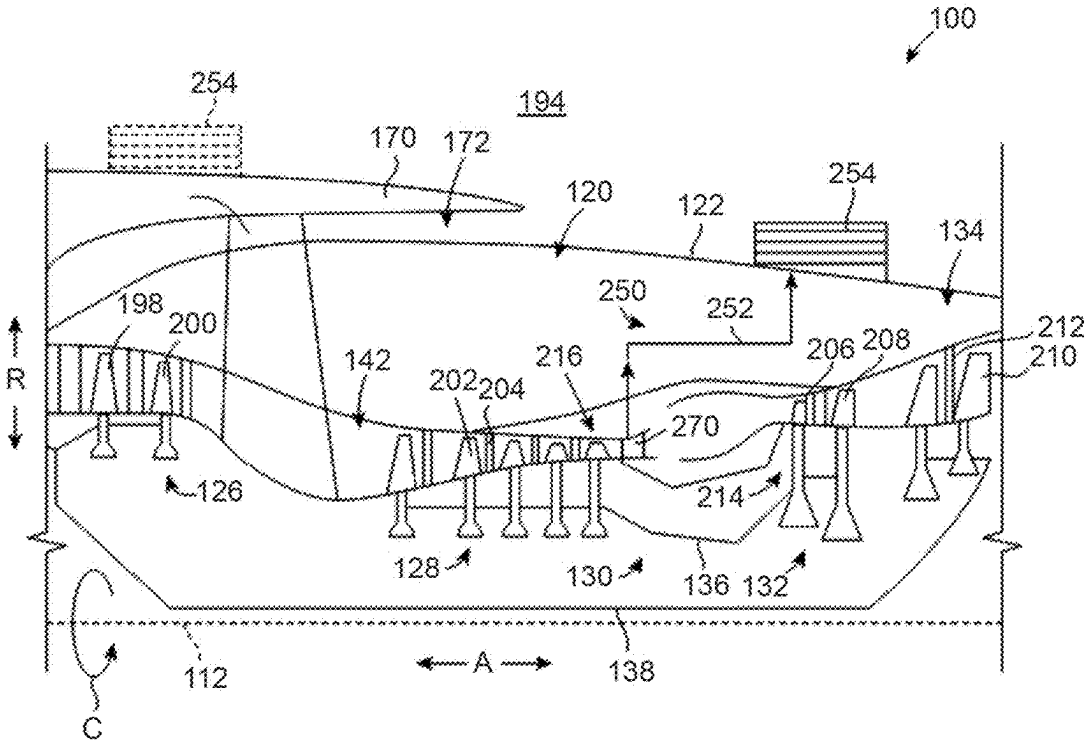
100
254
194
170
172
120
122
254
134
250
252
198
200
212
R
142
216
206
208
210
202
204
270
126
214
128
130
136
132
112
A
138
C

FIG. 9

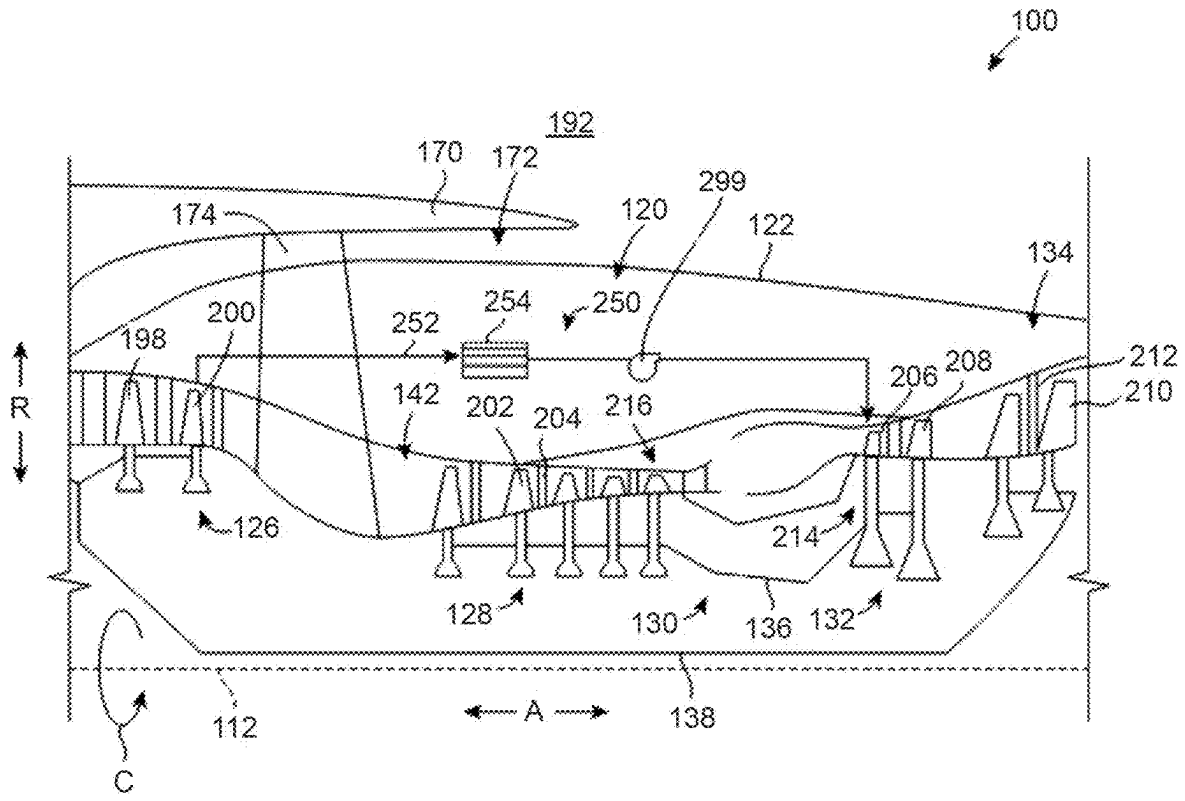
100
192
170
172
299
174
120
122
134
254
250
200
252
198
212
206
208
210
R
142
202
204
216
126
214
128
130
136
132
112
A
138
C

FIG. 10

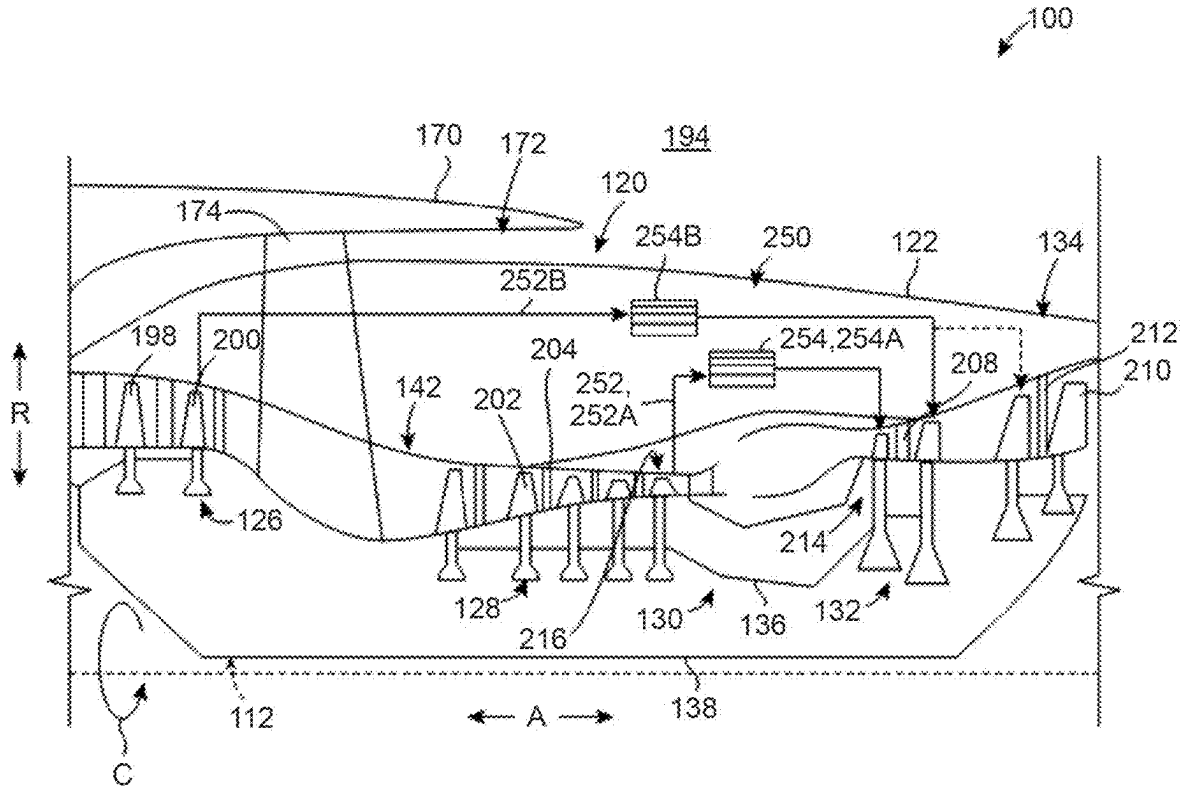
100
170
172
194
120
174
254B
250
122
134
252B
198
200
204
254,254A
212
208
210
R
142
202
252,
252A
126
214
128
216
130
136
132
112
A
138
C

FIG. 11

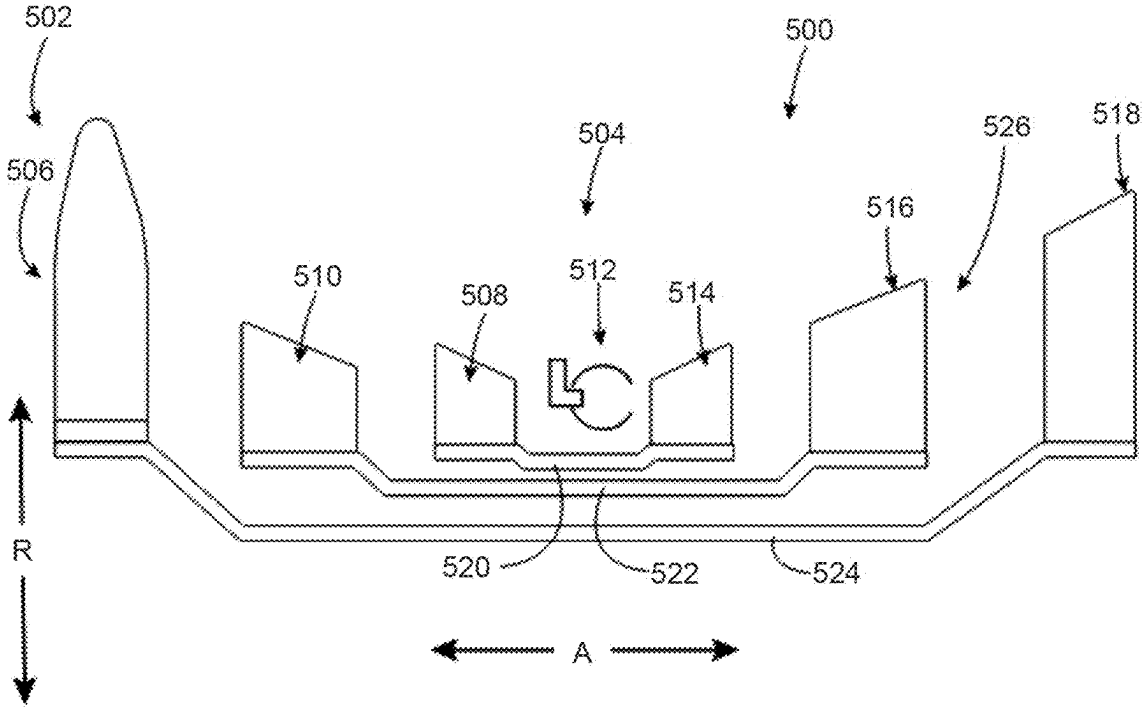

FIG. 12

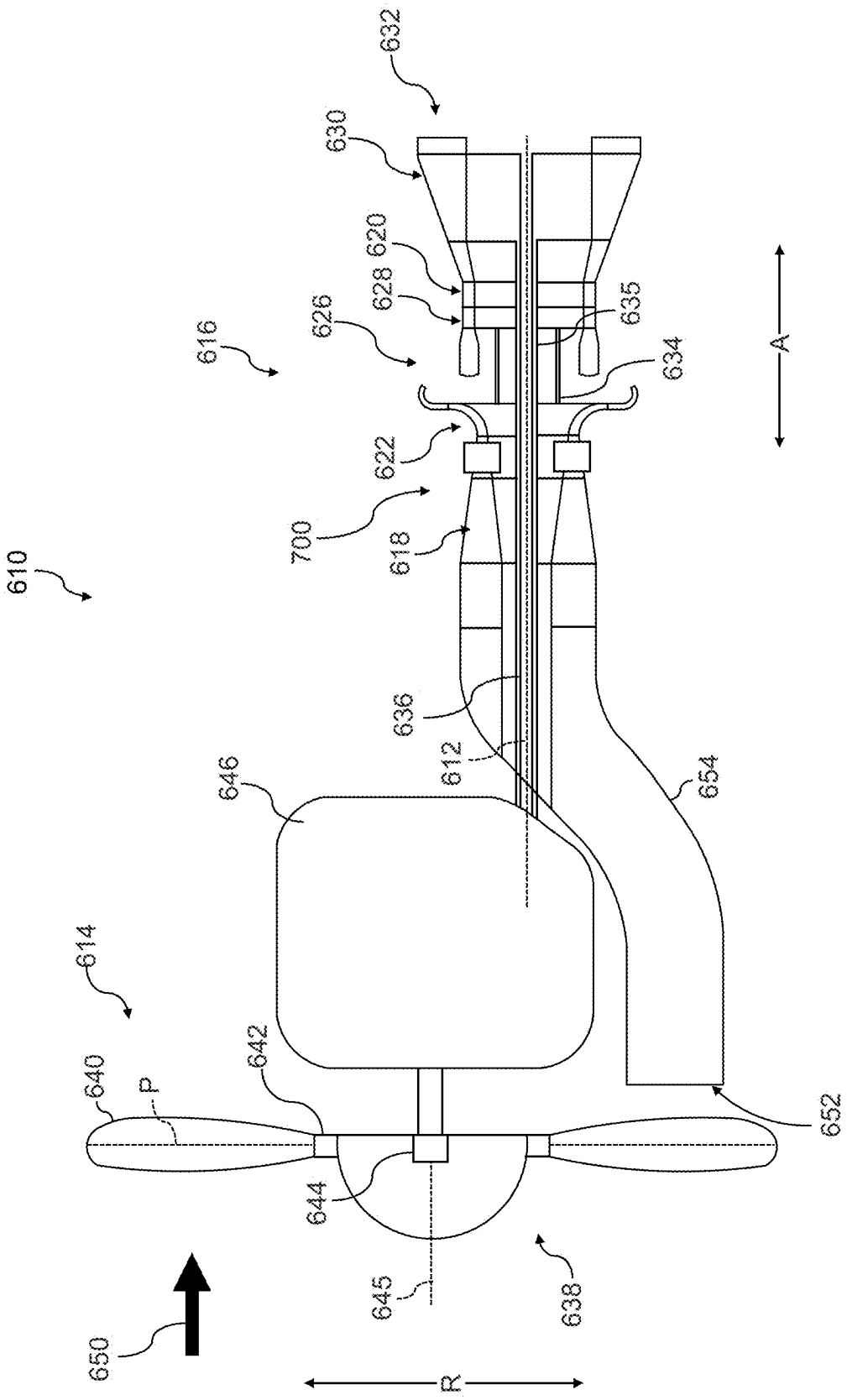
610
614
616
618
620
622
626
628
630
632
634
635
636
638
640
642
644
645
646
650
652
654
612
700
P
R
A

FIG. 13

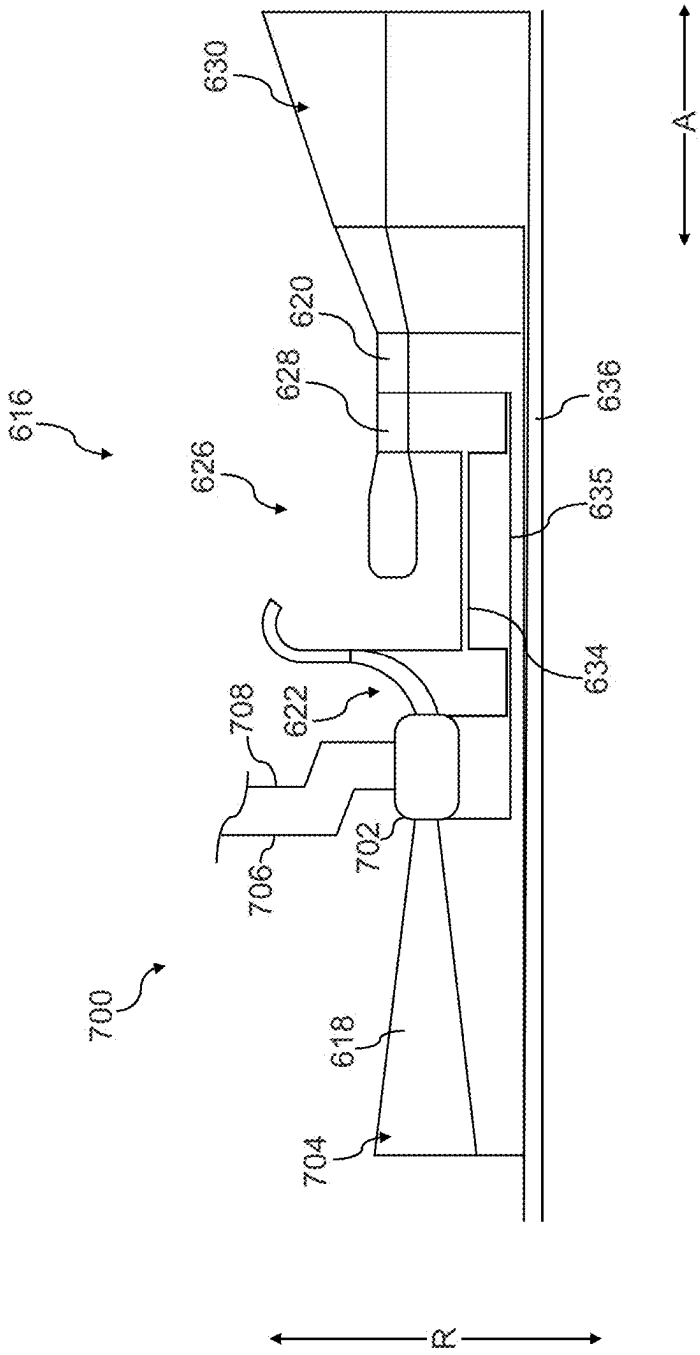

FIG. 14

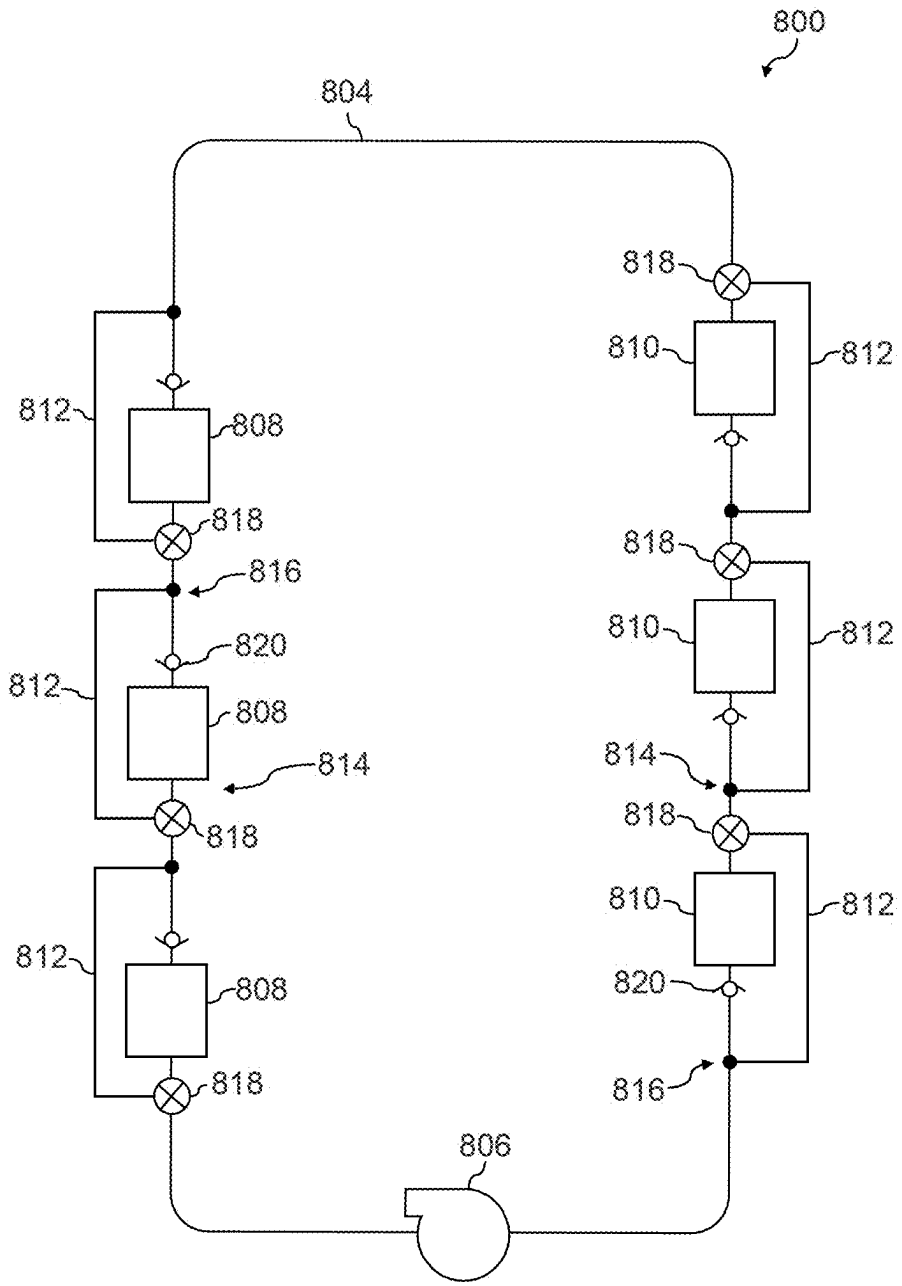
800
804
818
810
812
812
808
818
816
818
810
812
820
812
808
814
814
818
818
810
812
812
808
820
818
816
806

FIG. 15

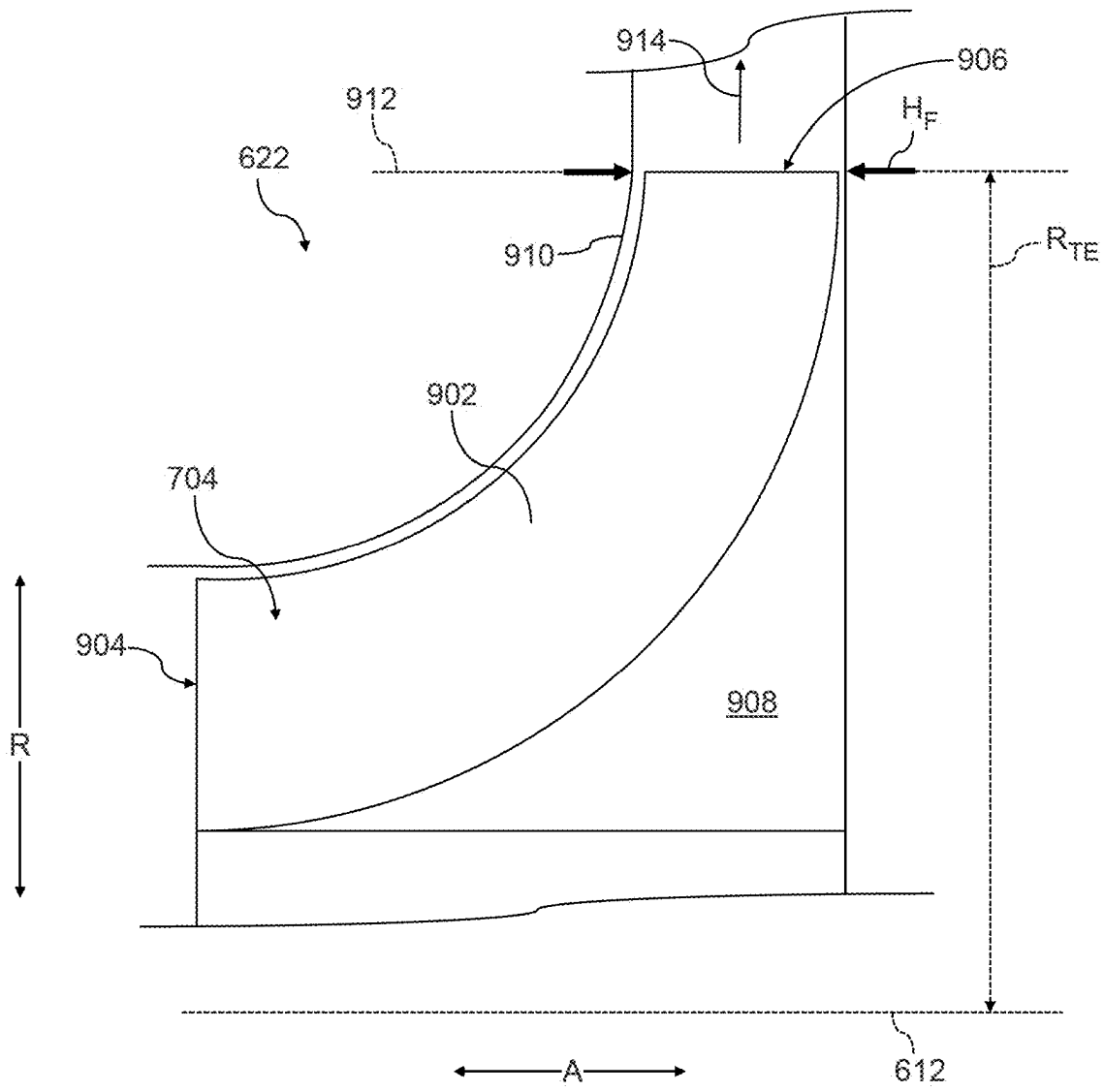

FIG. 16

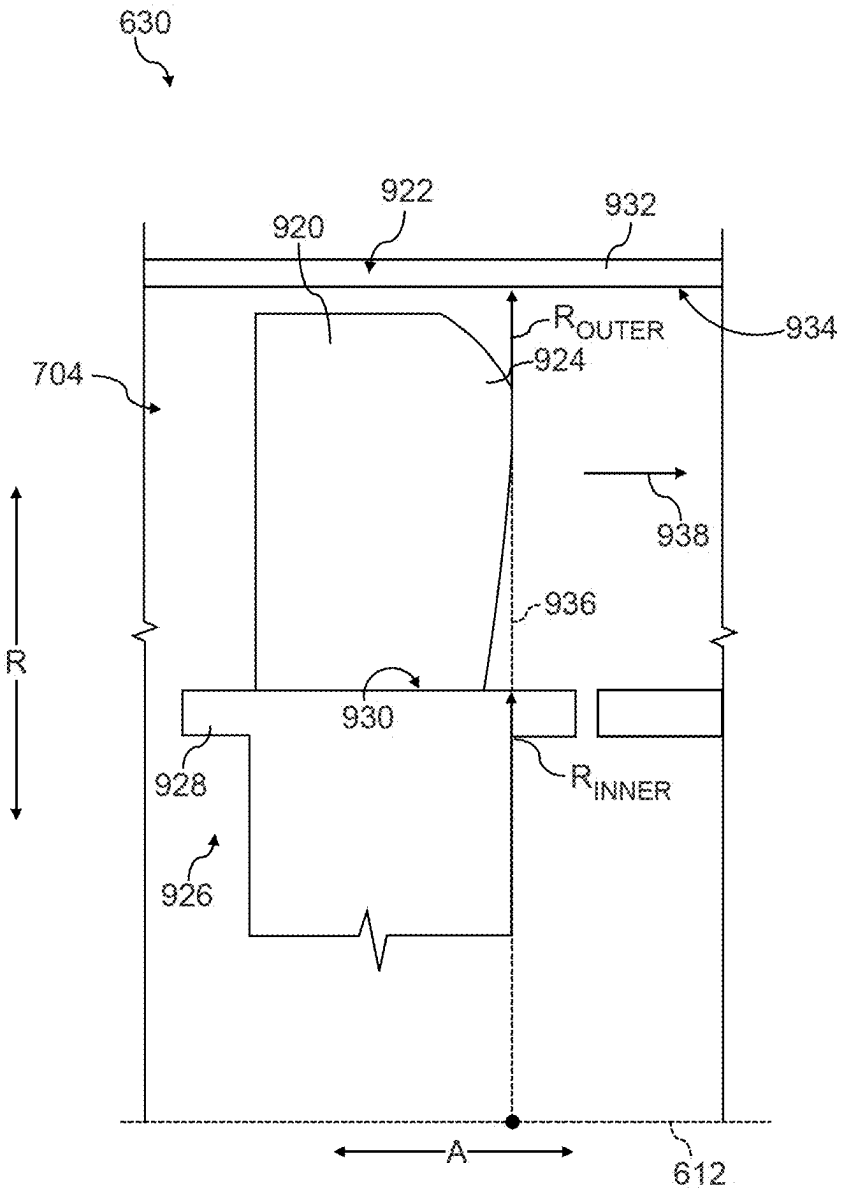
630
922
932
920
934
R_{OUTER}
924
704
938
936
R
930
928
R_{INNER}
926
A
612

FIG. 17

	Prop pwr	T_{LPT}	EGT	$A_{HPCExit}$	$A_{LPTExit}$	CSP
Unit	kW	N-m	°C	m2	m2	N^2-C/m2
Example 1	7530.8	4737.2	972.2	0.0231	0.1951	48.4
Example 2	5844.9	3762.3	1222.6	0.0129	0.1199	111.7
Example 3	5557.9	3524.2	621.1	0.0398	0.2767	7.0
Example 4	5101.5	3243.5	537.8	0.0359	0.3320	4.7
Example 5	5165.2	3274.7	1176.6	0.0078	0.0991	163.6
Example 6	744.4	530.0	721.1	0.0085	0.0602	3.4
Example 7	4372.7	2795.6	537.7	0.0312	0.2881	4.7
Example 8	3401.0	2171.4	1148.9	0.0055	0.0686	143.3
Example 9	2126.2	1382.3	1176.7	0.0060	0.0555	67.0
Example 10	2364.0	1529.7	1176.7	0.0065	0.0596	71.4
Example 11	2359.5	1527.1	1093.4	0.0072	0.0638	55.9
Example 12	2567.8	1658.0	760.0	0.0129	0.0999	16.2
Example 13	2351.0	1522.3	972.2	0.0084	0.0715	37.4
Example 14	5165.2	3274.7	1176.6	0.0078	0.0991	163.6
Example 15	4858.5	3083.2	1093.4	0.0083	0.1013	124.1
Example 16	2915.2	1872.8	760.0	0.0094	0.0981	28.9
Example 17	5096.1	3239.3	972.2	0.0175	0.1309	44.5
Example 18	5105.1	3243.0	972.2	0.0149	0.1269	54.0
Example 19	5111.0	3245.3	972.2	0.0133	0.1243	61.9
Example 20	5158.7	3270.1	1176.7	0.0091	0.0989	140.2
Example 21	5045.3	3208.7	787.8	0.0168	0.1598	30.2

FIG. 18

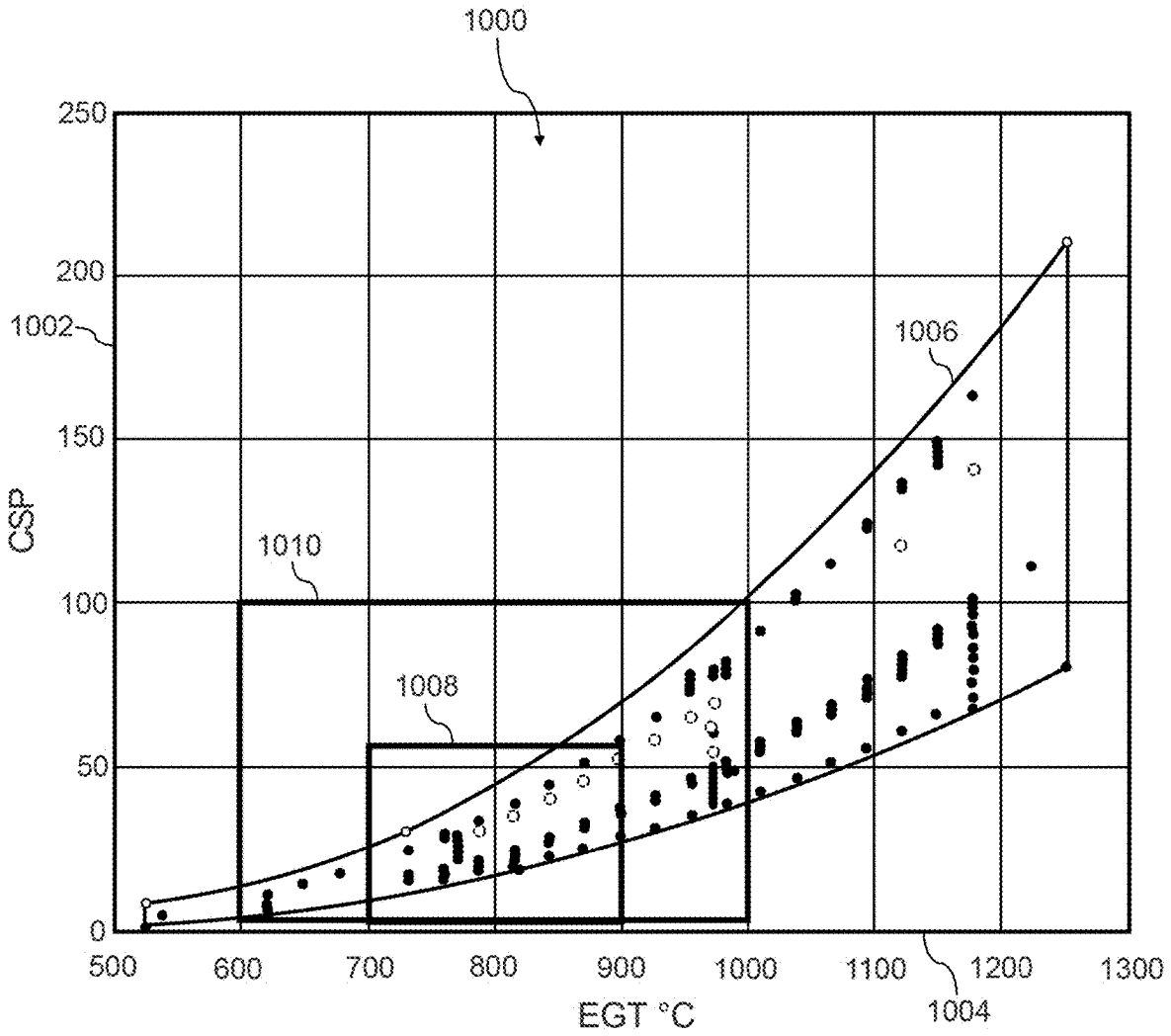
1000
250
200
1002
150
100
50
0
CSP
1006
1010
1008
500
600
700
800
900
1000
1100
1200
1300
EGT °C
1004

FIG. 19

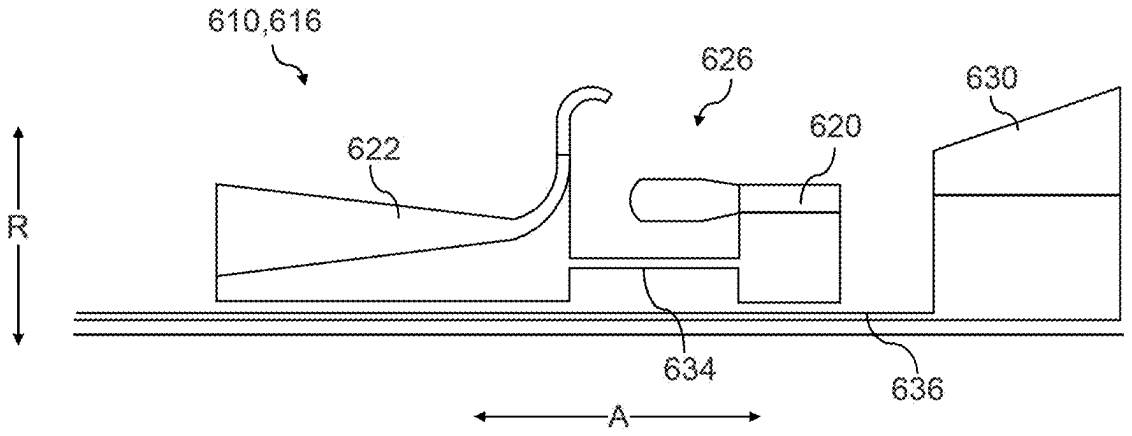

FIG. 20

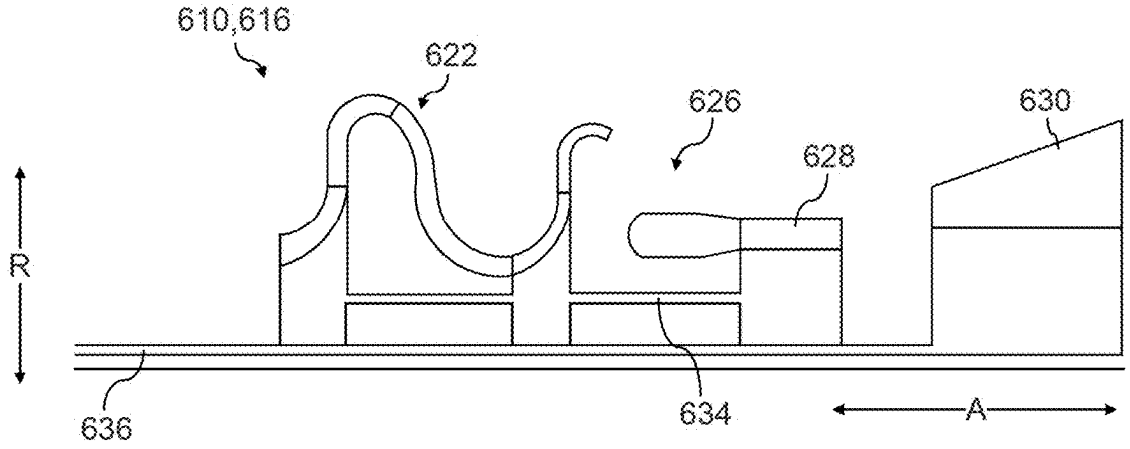

FIG. 21

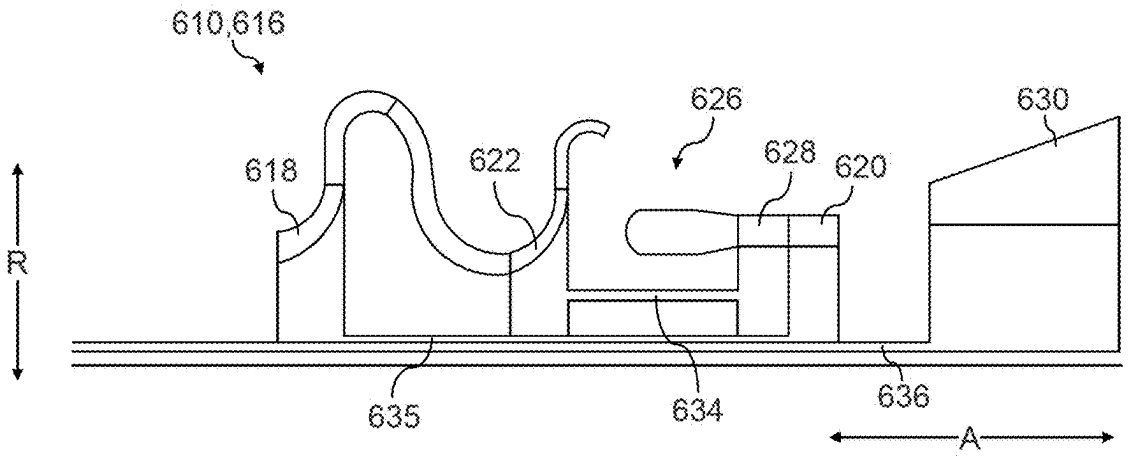

FIG. 22

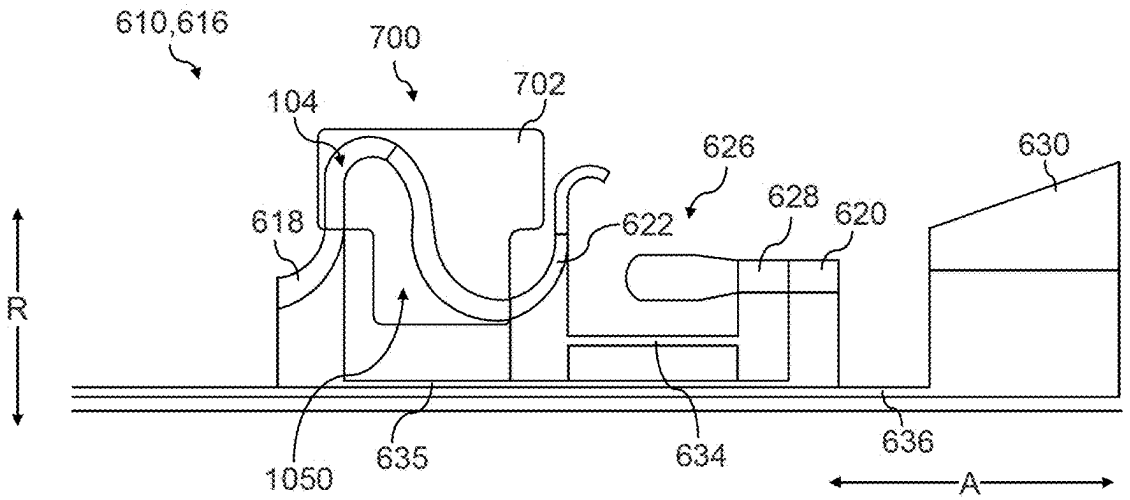

FIG. 23

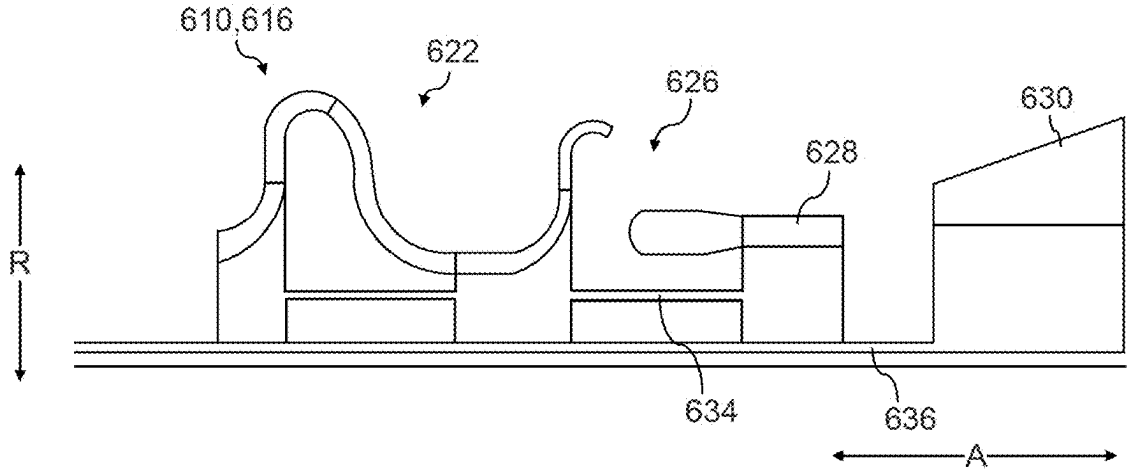

FIG. 24

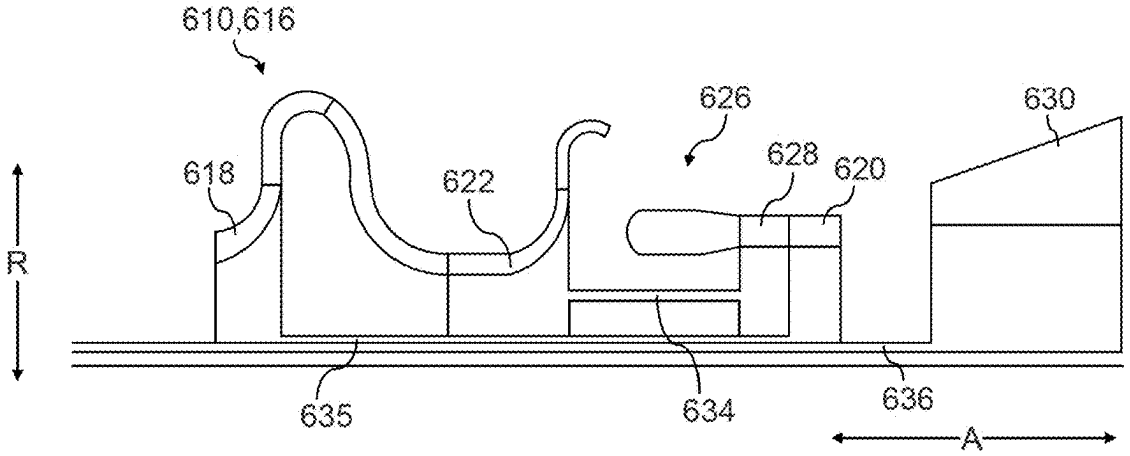

FIG. 25

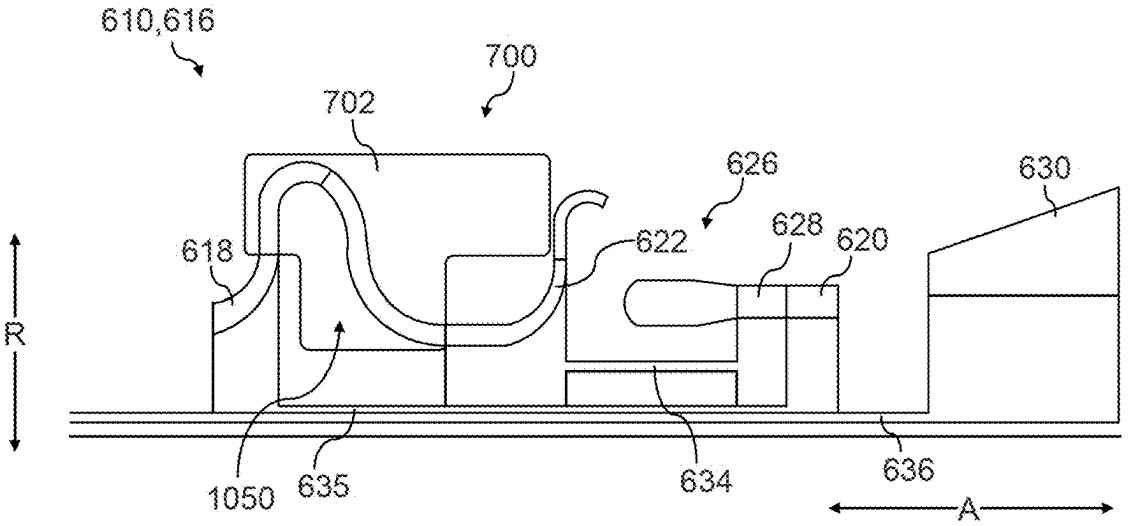

FIG. 26

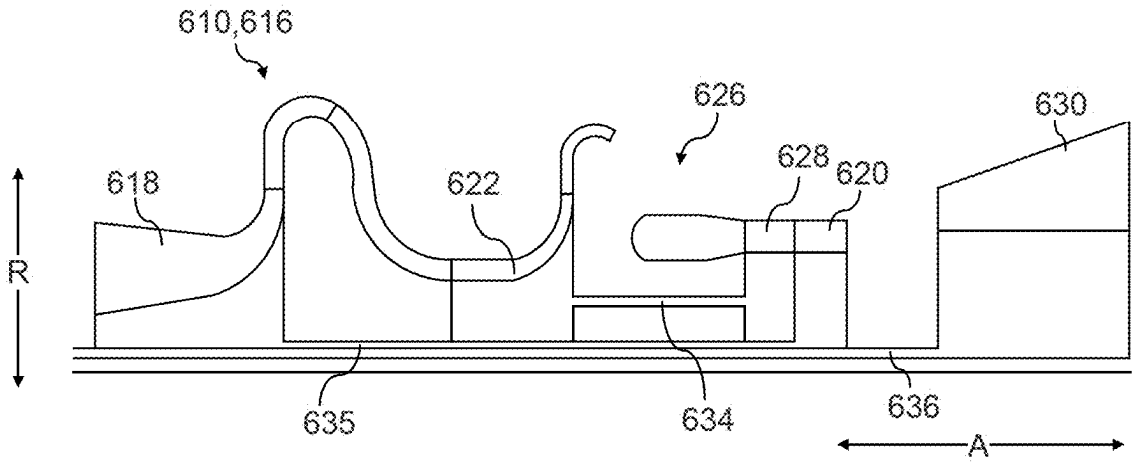
610,616
626
630
618
622
628
620
R
635
634
636
A

FIG. 27

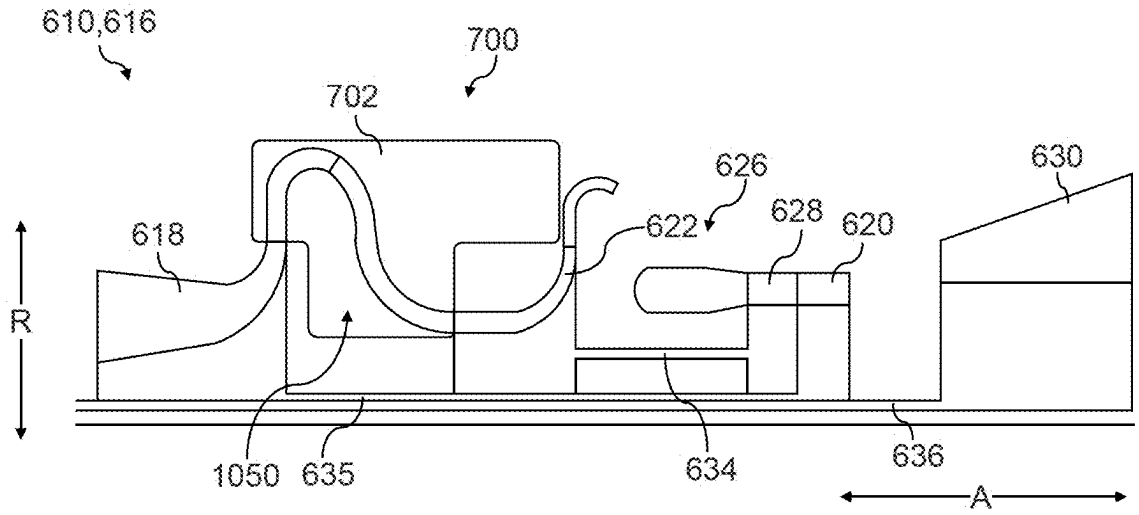
610,616
700
702
626
630
618
622
628
620
R
1050
635
634
636
A

FIG. 28

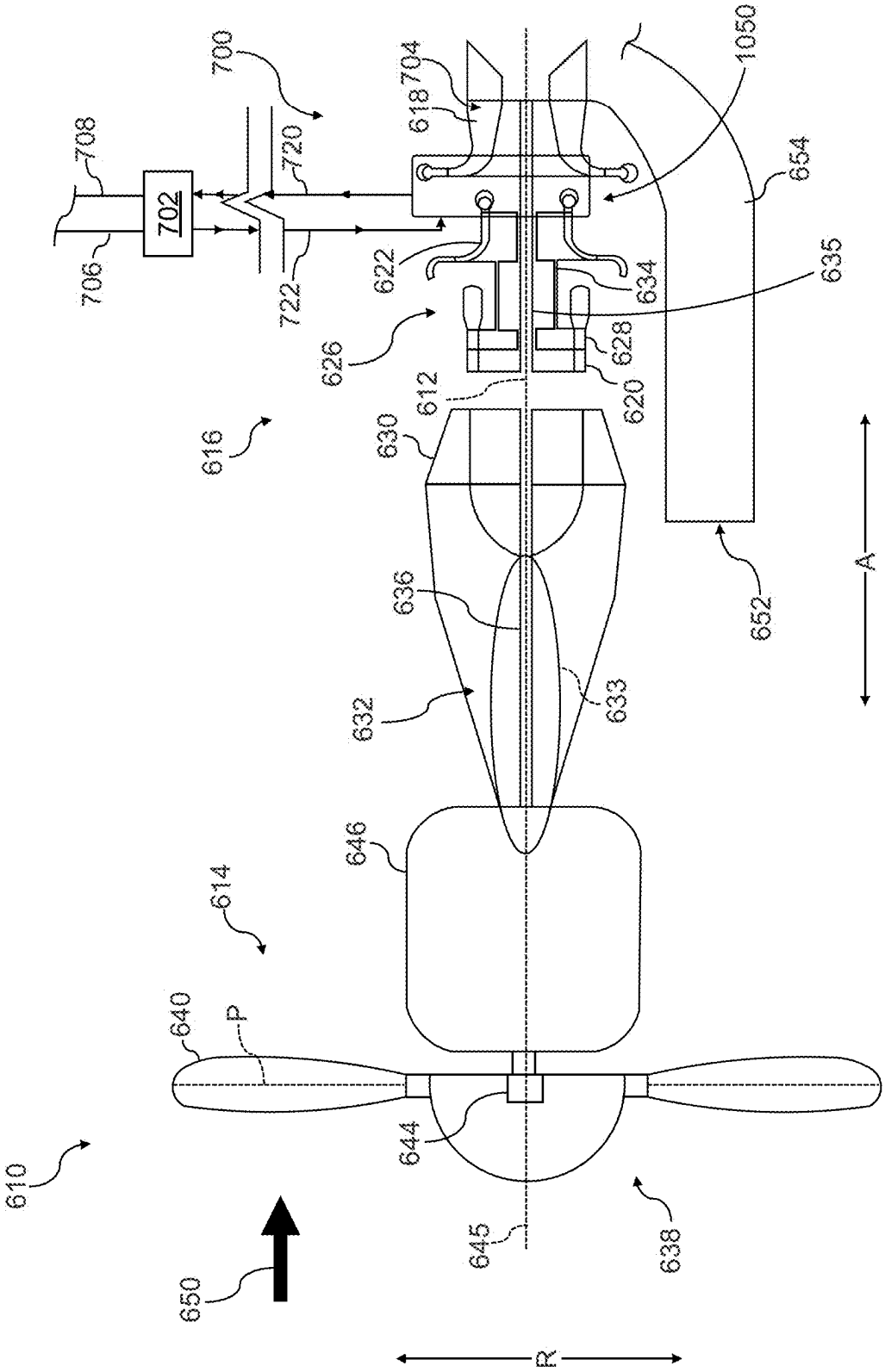
610
650
640
P
614
644
645
638
646
616
632
633
636
630
612
626
620
628
622
634
635
652
654
1050
618
704
700
720
722
702
706
708
A
R

FIG. 29

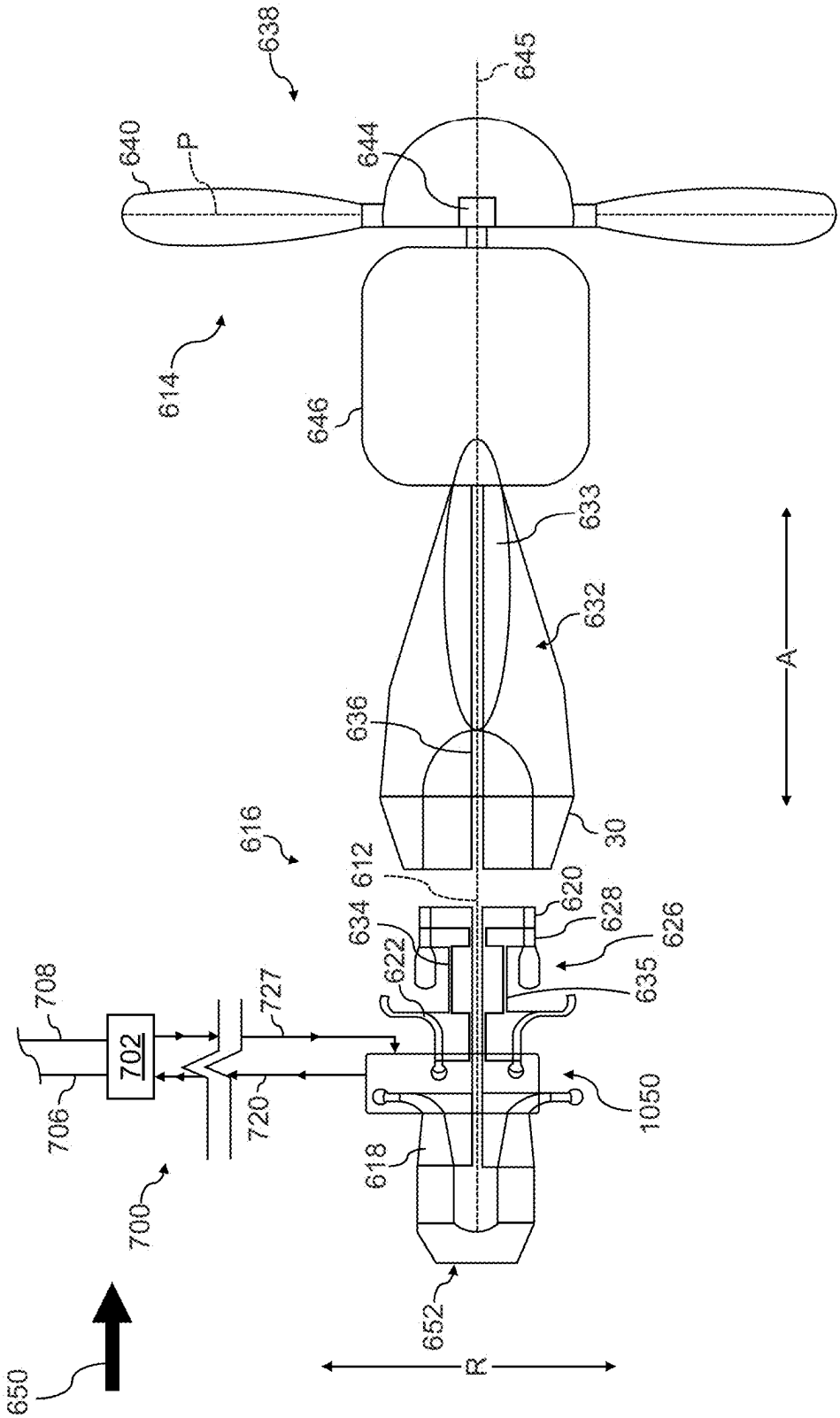
638
645
640
P
644
614
646
633
632
636
A
616
612
30
634
620
628
626
622
635
708
727
702
706
720
1050
618
700
652
650
R

FIG. 30

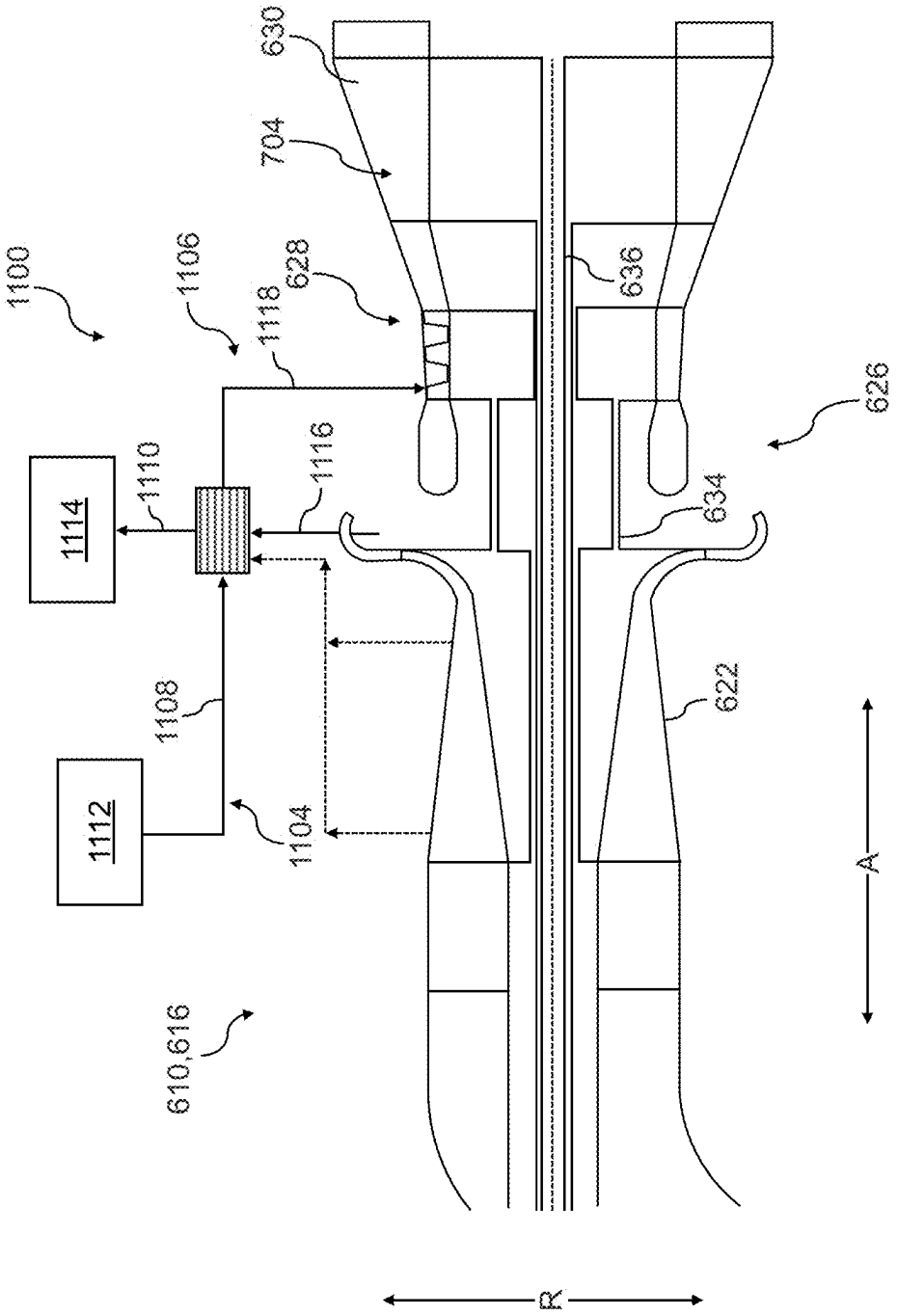
1100
1106
1118
628
630
704
1110
1114
1116
1108
1112
1104
610,616
636
626
634
622
A
R

FIG. 31

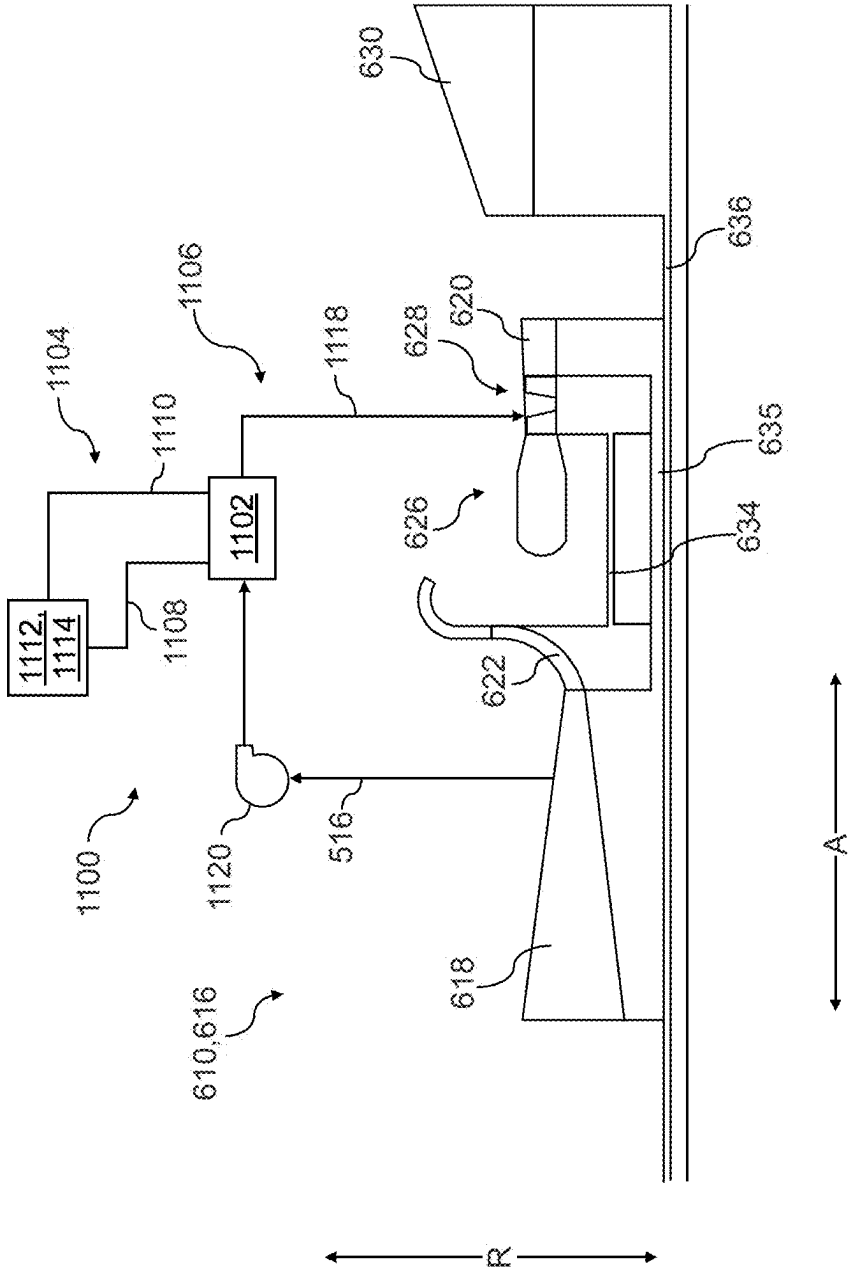
1104
1112,
1114
1110
1108
1106
1102
1118
1100
1120
516
610,616
630
628
620
626
622
618
636
635
634
A
R

FIG. 32

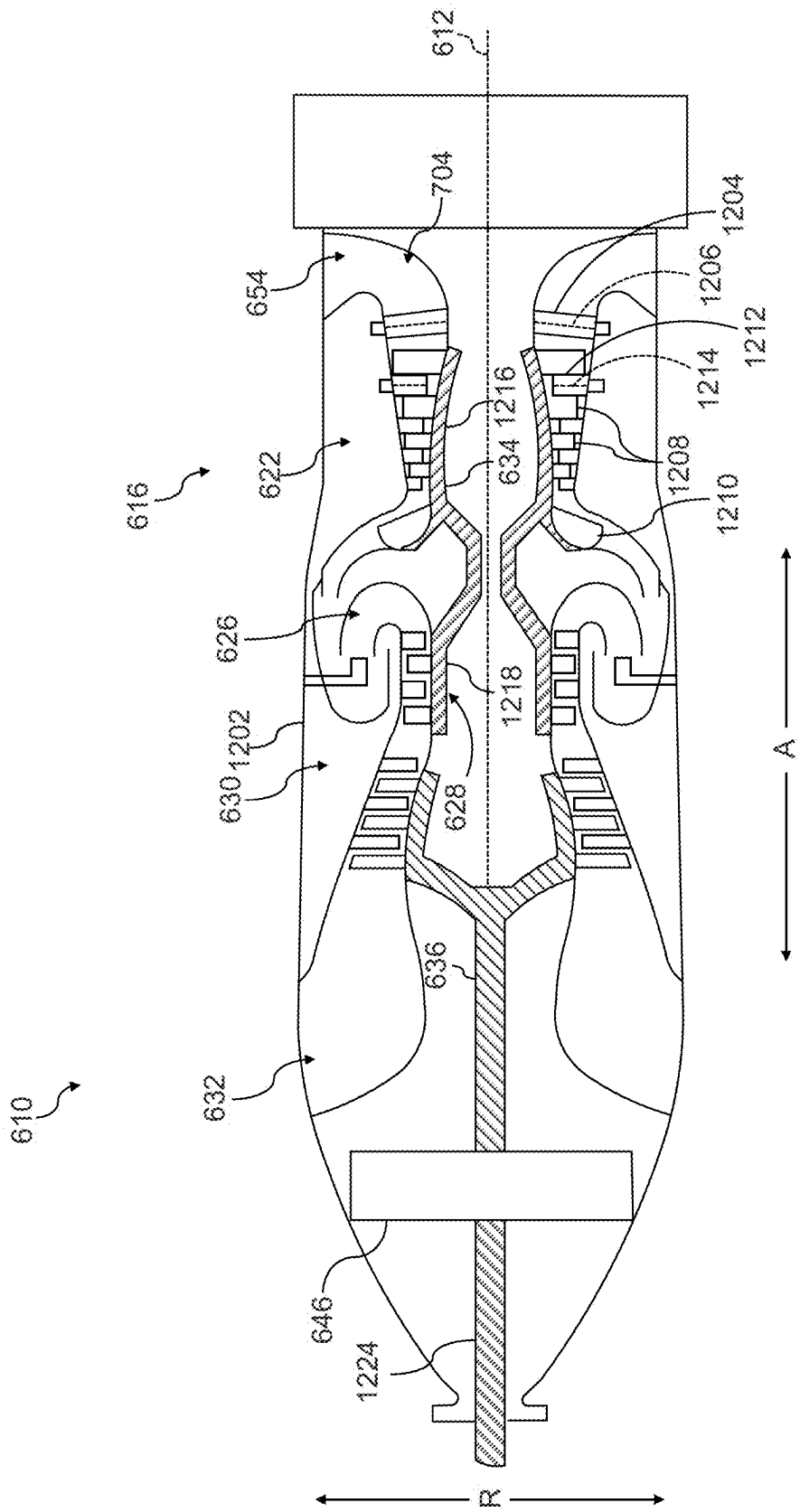
610
612
616
622
626
628
630
632
634
636
646
654
704
1202
1204
1206
1208
1210
1212
1214
1216
1218
1224
A
R

FIG. 33

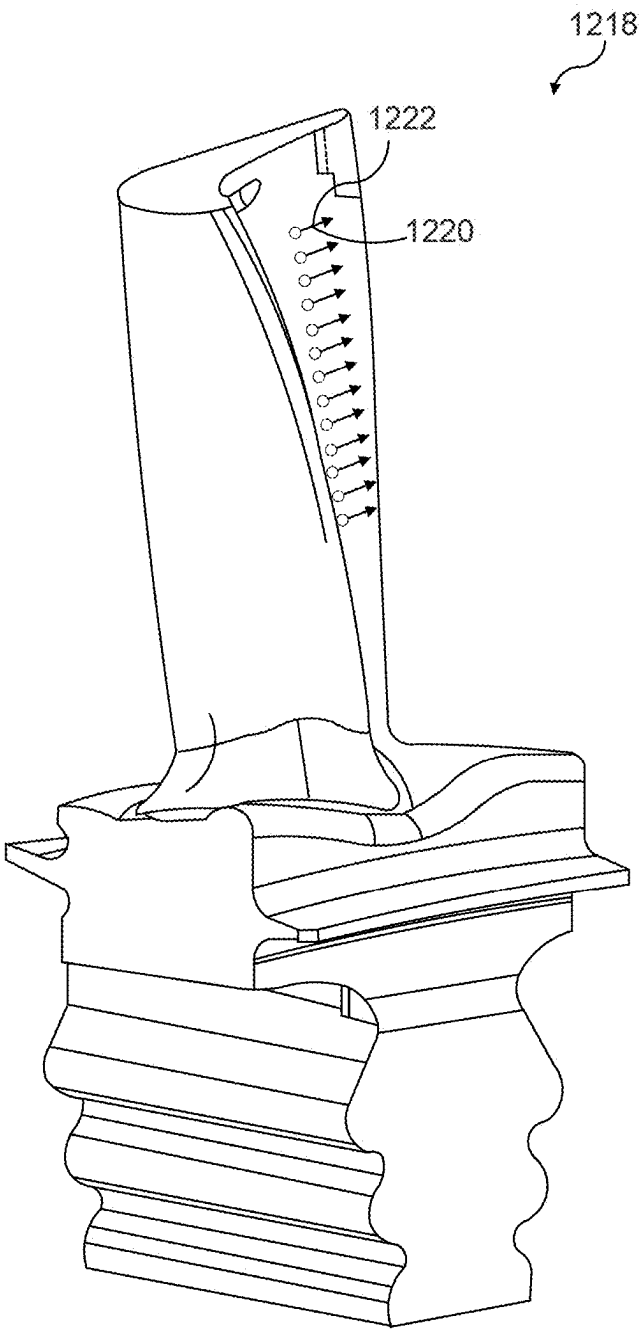

FIG. 34

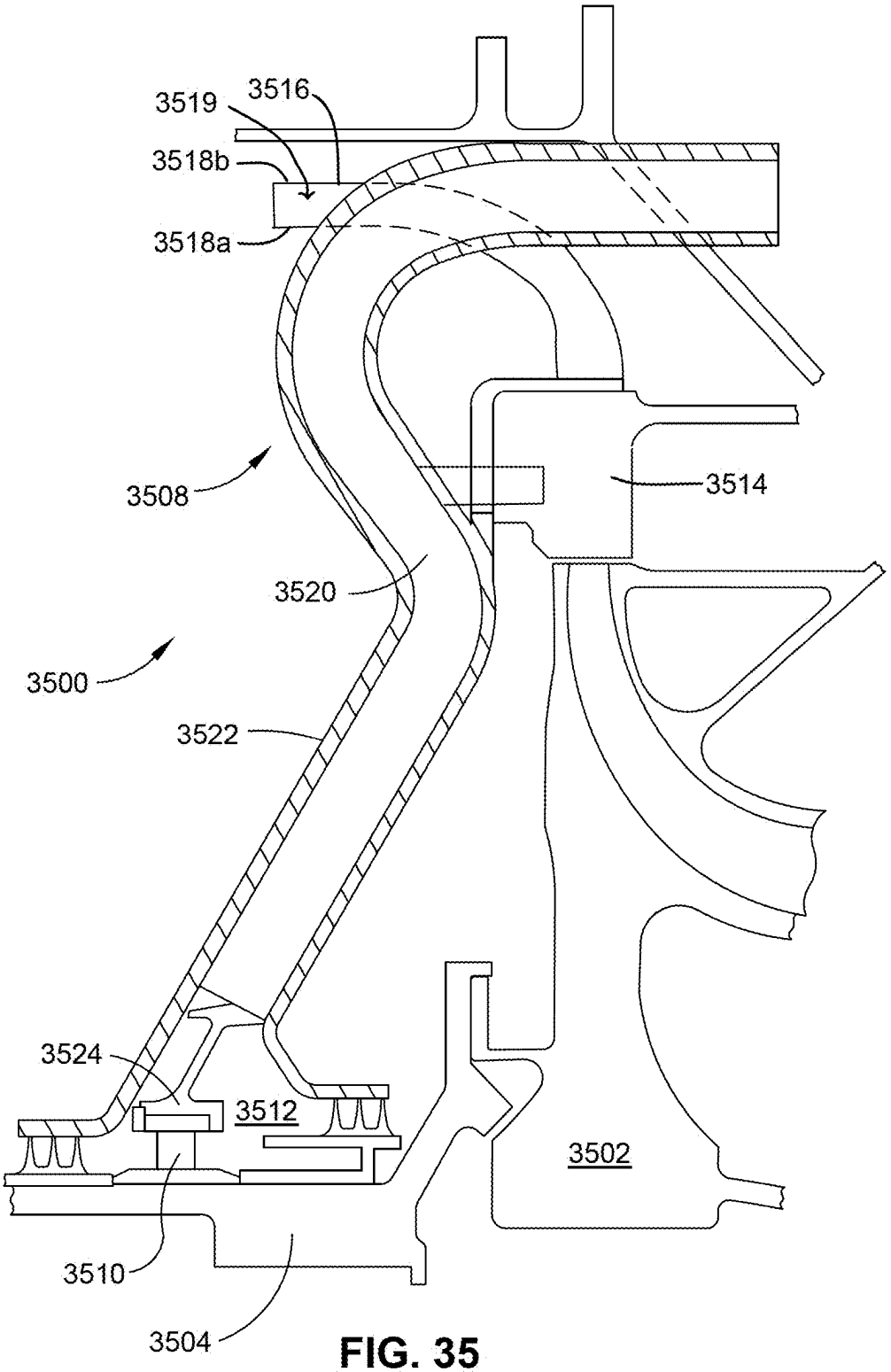
3519
3516
3518b
3518a
3508
3514
3520
3500
3522
3524
3512
3502
3510
3504

FIG. 35

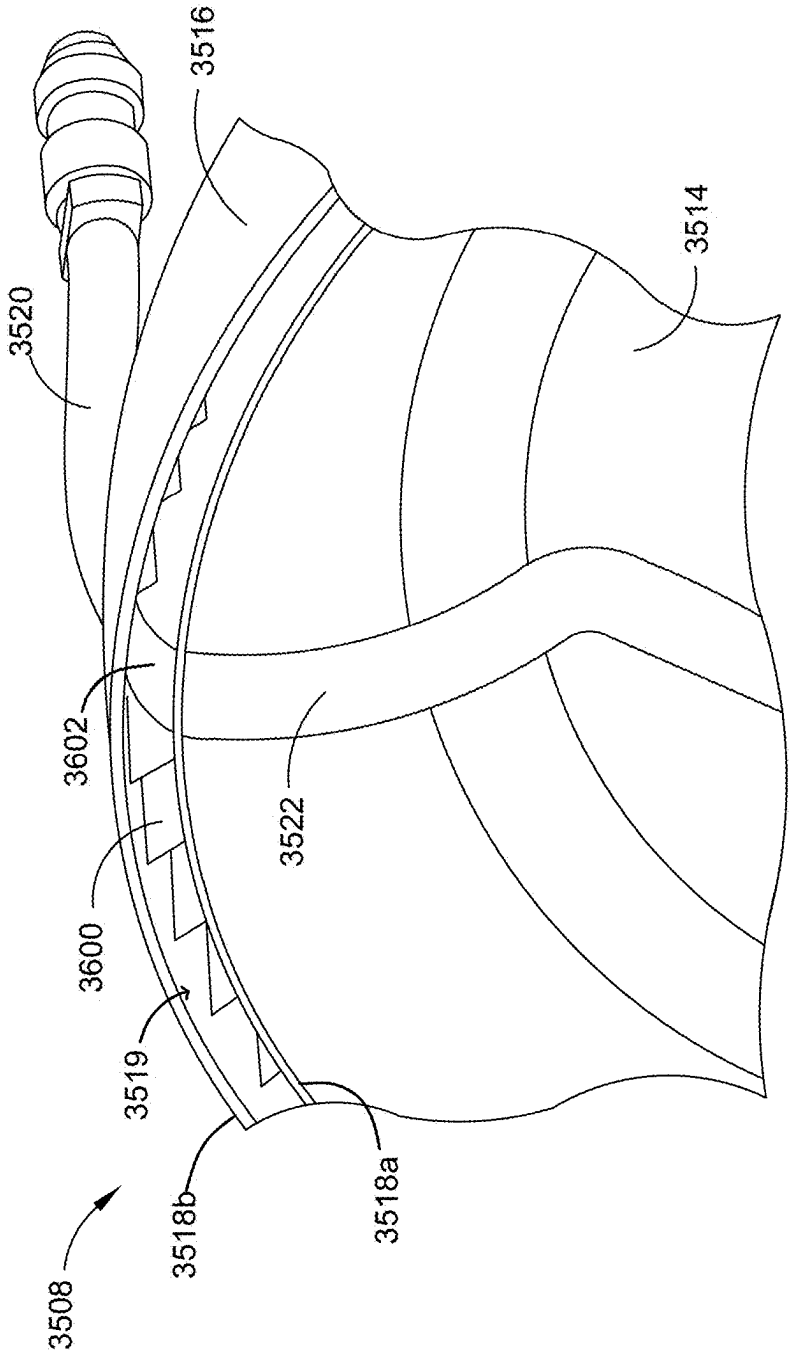

FIG. 36

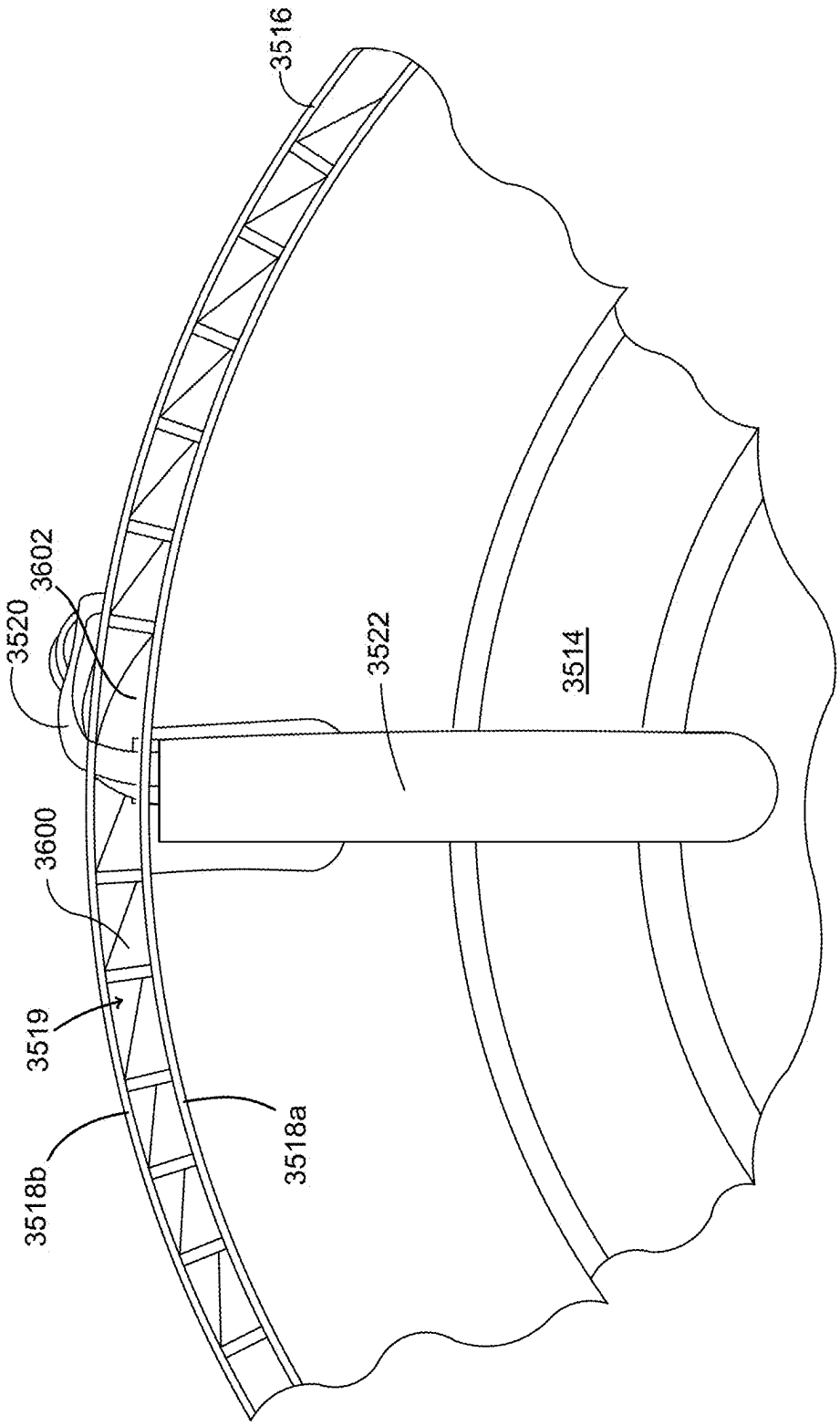

FIG. 37

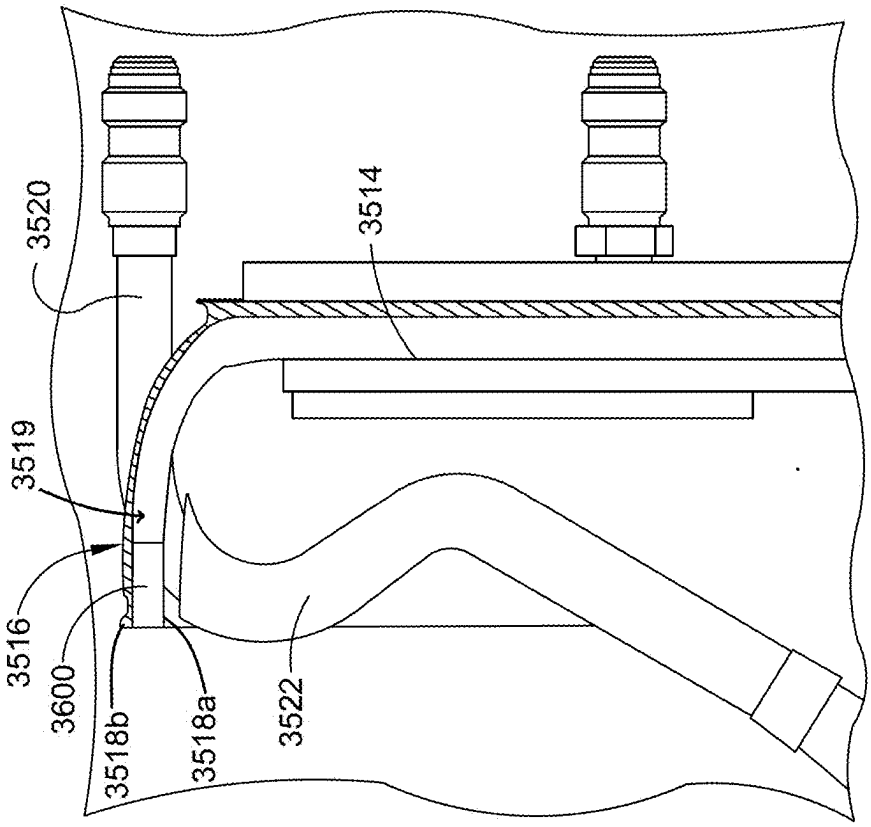

FIG. 38

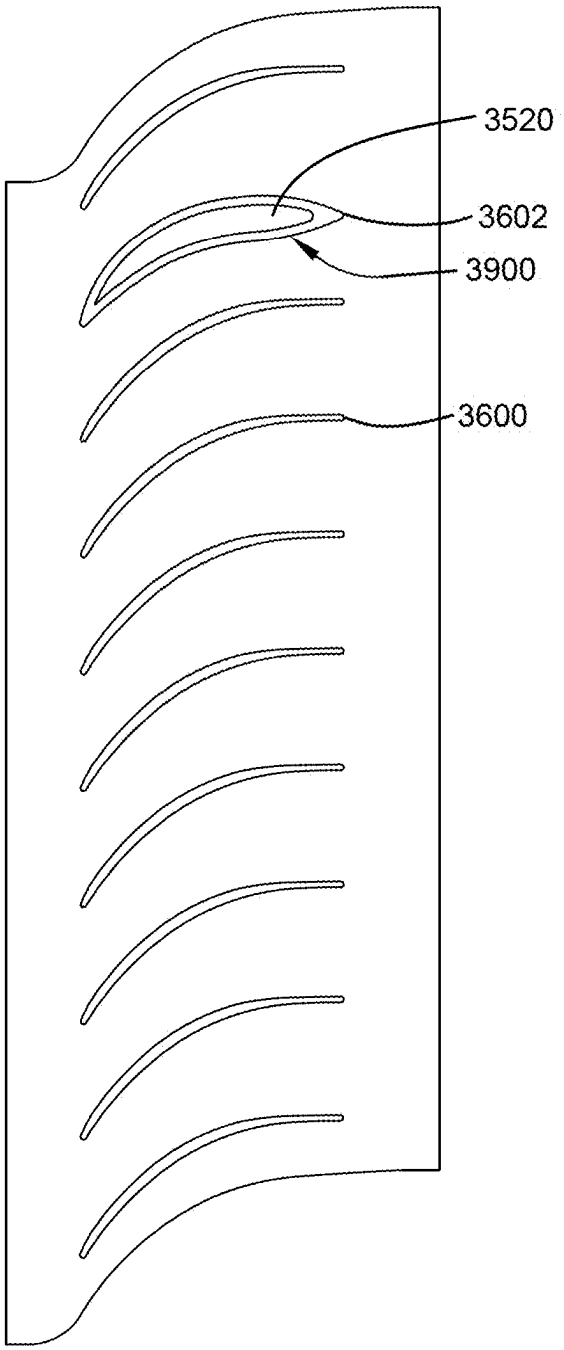

FIG. 39

GAS TURBINE ENGINE

CROSS-REFERENCE TO RELATED APPLICATIONS

[0001] This application is a continuation patent application of U.S. application Ser. No. 18/976,748, filed Dec. 11, 2024, which is a continuation patent application of U.S. application Ser. No. 18/650,586 (now U.S. Pat. No. 12,196,131), filed Apr. 30, 2024, which is a continuation-in-part application of U.S. application Ser. No. 18/500,517 (now U.S. Pat. No. 12,078,107), filed Nov. 2, 2023, which is a continuation patent application of U.S. application Ser. No. 18/481,515, filed Oct. 5, 2023, which is a continuation-in-part application of U.S. application Ser. No. 17/978,629 filed Nov. 1, 2022 (now abandoned). Each of these applications are hereby incorporated by reference in their entirety.

FIELD

[0002] The present disclosure relates to a gas turbine engine.

BACKGROUND

[0003] A gas turbine engine includes a turbomachine. The turbomachine generally includes an inlet, one or more compressors, a combustor, and at least one turbine. The compressors compress air which is channeled to the combustor where it is mixed with fuel. The mixture is then ignited for generating hot combustion gases. The combustion gases are channeled to the turbine(s) which extracts energy from the combustion gases for powering the compressor(s), as well as for producing useful work to, e.g., propel an aircraft in flight. The turbomachine is mechanically coupled to an output shaft to, in the case of a turboprop engine, drive a propeller assembly of the gas turbine engine during operation.

BRIEF DESCRIPTION OF THE DRAWINGS

[0004] A full and enabling disclosure of the present disclosure, including the best mode thereof, directed to one of ordinary skill in the art, is set forth in the specification, which makes reference to the appended FIG.s, in which:

[0005] FIG. **1** is a schematic cross-sectional view of a three-stream engine in accordance with an exemplary embodiment of the present disclosure.

[0006] FIG. **2** is a close-up, schematic view of the exemplary three-stream engine of FIG. **1** with a cooled cooling air system in accordance with an exemplary embodiment of the present disclosure.

[0007] FIG. **3** is a close-up view of an aft-most stage of high pressure compressor rotor blades within the exemplary three-stream engine of FIG. **1**.

[0008] FIG. **4** is a close-up, schematic view of the exemplary three-stream engine of FIG. **1** showing the cooled cooling air system of FIG. **2**.

[0009] FIG. **5** is a schematic view of a thermal transport bus of the present disclosure.

[0010] FIG. **6** is a table depicting numerical values showing the relationships between various parameters in accordance with various example embodiments of the present disclosure.

[0011] FIG. **7** is a graph depicting a range of corrected specific thrust values and maximum exhaust gas temperature values of gas turbine engines in accordance with various example embodiments of the present disclosure.

[0012] FIG. **8** is a schematic view of a ducted turbofan engine in accordance with an exemplary aspect of the present disclosure.

[0013] FIG. **9** is a schematic, close-up view of a gas turbine engine having a cooled cooling air system in accordance with another exemplary aspect of the present disclosure.

[0014] FIG. **10** is a schematic, close-up view of a gas turbine engine having a cooled cooling air system in accordance with yet another exemplary aspect of the present disclosure.

[0015] FIG. **11** is a schematic, close-up view of a gas turbine engine having a cooled cooling air system in accordance with still another exemplary aspect of the present disclosure.

[0016] FIG. **12** is a schematic view of a turbofan engine in accordance with another exemplary aspect of the present disclosure.

[0017] FIG. **13** is a schematic view of a turboprop engine in accordance with an exemplary aspect of the present disclosure.

[0018] FIG. **14** is a schematic view of a turbomachine of the exemplary turboprop engine of FIG. **13** in accordance with an exemplary aspect of the present disclosure.

[0019] FIG. **15** is a schematic view of a thermal transport bus of the present disclosure.

[0020] FIG. **16** is a close-up view of an aft-most stage of high pressure compressor rotor blades within the exemplary turboprop engine of FIG. **13**.

[0021] FIG. **17** is a close-up view of an aft-most stage of low pressure turbine rotor blades within the exemplary turboprop engine of FIG. **13**.

[0022] FIG. **18** is a table depicting numerical values showing the relationships between various parameters in accordance with various example embodiments of the present disclosure.

[0023] FIG. **19** is a graph depicting a range of corrected specific power values and maximum exhaust gas temperature values of gas turbine engines in accordance with various example embodiments of the present disclosure.

[0024] FIG. **20** is a schematic view of a turbomachine of a gas turbine engine in accordance with another exemplary aspect of the present disclosure.

[0025] FIG. **21** is a schematic view of a turbomachine of a gas turbine engine in accordance with another exemplary aspect of the present disclosure.

[0026] FIG. **22** is a schematic view of a turbomachine of a gas turbine engine in accordance with another exemplary aspect of the present disclosure.

[0027] FIG. **23** is a schematic view of a turbomachine of a gas turbine engine in accordance with another exemplary aspect of the present disclosure.

[0028] FIG. **24** is a schematic view of a turbomachine of a gas turbine engine in accordance with another exemplary aspect of the present disclosure.

[0029] FIG. **25** is a schematic view of a turbomachine of a gas turbine engine in accordance with another exemplary aspect of the present disclosure.

[0030] FIG. **26** is a schematic view of a turbomachine of a gas turbine engine in accordance with another exemplary aspect of the present disclosure.

[0031] FIG. **27** is a schematic view of a turbomachine of a gas turbine engine in accordance with another exemplary aspect of the present disclosure.

[0032] FIG. **28** is a schematic view of a turbomachine of a gas turbine engine in accordance with another exemplary aspect of the present disclosure.

[0033] FIG. **29** is a schematic view of a turboprop engine in accordance with an exemplary aspect of the present disclosure.

[0034] FIG. **30** is a schematic view of a turboprop engine in accordance with an exemplary aspect of the present disclosure.

[0035] FIG. **31** is a schematic view of a turbomachine of a gas turbine engine in accordance with another exemplary aspect of the present disclosure.

[0036] FIG. **32** is a schematic view of a turbomachine of a gas turbine engine in accordance with another exemplary aspect of the present disclosure.

[0037] FIG. **33** is a schematic view of a gas turbine engine in accordance with an exemplary aspect of the present disclosure.

[0038] FIG. **34** is a schematic view of a high pressure turbine rotor blade in accordance with an exemplary aspect of the present disclosure.

[0039] FIG. **35** is cross-sectional view showing a portion of a centrifugal compressor stage having a deswirler assembly that can be implemented in any of the gas turbine engines disclosed herein.

[0040] FIG. **36** is a perspective view of the deswirler assembly of FIG. **35**.

[0041] FIG. **37** is an axial view of the deswirler assembly of FIG. **35**.

[0042] FIG. **38** is a cross-sectional view of the deswirler assembly of FIG. **35**.

[0043] FIG. **39** is a plan view of a plurality of vanes of the deswirler assembly of FIG. **35**.

DETAILED DESCRIPTION

[0044] Reference will now be made in detail to present embodiments of the disclosure, one or more examples of which are illustrated in the accompanying drawings. The detailed description uses numerical and letter designations to refer to features in the drawings. Like or similar designations in the drawings and description have been used to refer to like or similar parts of the disclosure.

[0045] The term "cooled cooling air system" is used herein to mean a system configured to provide a cooling airflow to one or more components exposed to a working gas flowpath of a turbomachine of a gas turbine engine at a location downstream of a combustor of the turbomachine and upstream of an exhaust nozzle of the turbomachine, the cooling airflow being in thermal communication with a heat exchanger for reducing a temperature of the cooling airflow at a location upstream of the one or more components.

[0046] The cooled cooling air systems contemplated by the present disclosure may include a thermal bus cooled cooling air system (see, e.g., FIGS. **4** and **5**) or a dedicated heat exchanger cooled cooling air system (i.e., a cooled cooling air system including a heat sink heat exchanger dedicated to the cooled cooling air system); a bypass heat exchanger cooled cooling air system having a heat sink heat exchanger thermally coupled to an airflow through a bypass passage (see, e.g., FIG. **9**); an air-to-air cooled cooling air system (i.e., a cooled cooling air system having a heat sink heat exchanger configured to transfer heat to an airflow; see, e.g., FIG. **9**); an oil-to-air cooled cooling air system (i.e., a cooled cooling air system having a heat sink heat exchanger configured to transfer heat to an oil flow); a fuel-to-air cooled cooling air system (i.e., a cooled cooling air system having a heat sink heat exchanger configured to transfer heat to a fuel flow, such as a Jet A fuel flow, a liquid hydrogen or hydrogen gas fuel flow, etc.; see, e.g., FIG. **4**); or a combination thereof. Cooled cooling air systems contemplated by the present disclosure may be incorporated into turbofan engines, open rotor engines, turboprop engines (see FIGS. **31** and **32**), and/or turboshaft engines.

[0047] In one or more of the exemplary cooled cooling air systems described herein, the cooled cooling air system may receive the cooling air from a downstream end of a high pressure compressor (i.e., a location closer to a last stage of the high pressure compressor), an upstream end of the high pressure compressor (i.e., a location closer to a first stage of the high pressure compressor), a downstream end of a low pressure compressor (i.e., a location closer to a last stage of the low pressure compressor), an upstream end of the low pressure compressor (i.e., a location closer to a first stage of the low pressure compressor), a location between compressors, a bypass passage, a combination thereof, or any other suitable airflow source.

[0048] The term "intercooler assembly" is used herein to mean a system configured to provide cooling to a gas flow through a compressor section of a turbomachine of a gas turbine engine, transferring heat from such gas flow to one or more heat sinks on the gas turbine engine and/or an aircraft incorporating the gas turbine engine. Exemplary intercooler assemblies of the present disclosure may include an intercooler heat exchanger positioned within a working gas flowpath through the compressor section, integrated into (or otherwise in thermal communication with) one or more liners or walls of the working gas flowpath through the compressor section, or located external to a turbomachine of the engine with all or a portion of the airflow through the compressor section being redirected to the intercooler heat exchanger.

[0049] The word "exemplary" is used herein to mean "serving as an example, instance, or illustration." Any implementation described herein as "exemplary" is not necessarily to be construed as preferred or advantageous over other implementations. Additionally, unless specifically identified otherwise, all embodiments described herein should be considered exemplary.

[0050] As used herein, the terms "first", "second", and "third" may be used interchangeably to distinguish one component from another and are not intended to signify location or importance of the individual components.

[0051] The terms "forward" and "aft" refer to relative positions within a gas turbine engine or vehicle and are based on a normal operational attitude of the gas turbine engine or vehicle. More particularly, forward and aft are used herein with reference to a direction of travel and a direction of propulsive thrust of the gas turbine engine or vehicle.

[0052] The terms "upstream" and "downstream" refer to the relative direction with respect to fluid flow in a fluid pathway. For example, "upstream" refers to the direction from which the fluid flows, and "downstream" refers to the direction to which the fluid flows.

[0053] The terms "coupled," "fixed," "attached to," and the like refer to both direct coupling, fixing, or attaching, as well as indirect coupling, fixing, or attaching through one or more intermediate components or features, unless otherwise specified herein.

[0054] The singular forms "a", "an", and "the" include plural references unless the context clearly dictates otherwise.

[0055] The phrases "from X to Y" and "between X and Y" each refers to a range of values inclusive of the endpoints (i.e., refers to a range of values that includes both X and Y).

[0056] A "third stream" as used herein means a non-primary air stream capable of increasing fluid energy to produce a minority of total propulsion system thrust. A pressure ratio of the third stream may be higher than that of the primary propulsion stream (e.g., a bypass or propeller driven propulsion stream). The thrust may be produced through a dedicated nozzle or through mixing of an airflow through the third stream with a primary propulsion stream or a core air stream, e.g., into a common nozzle.

[0057] In certain exemplary embodiments an operating temperature of the airflow through the third stream may be less than a maximum compressor discharge temperature for the engine, and more specifically may be less than 350 degrees Fahrenheit (such as less than 300 degrees Fahrenheit, such as less than 250 degrees Fahrenheit, such as less than 200 degrees Fahrenheit, and at least as great as an ambient temperature). In certain exemplary embodiments these operating temperatures may facilitate heat transfer to or from the airflow through the third stream and a separate fluid stream. Further, in certain exemplary embodiments, the airflow through the third stream may contribute less than 50% of the total engine thrust (and at least, e.g., 2% of the total engine thrust) at a takeoff condition, or more particularly while operating at a rated takeoff power at sea level, static flight speed, 86 degrees Fahrenheit ambient temperature operating conditions.

[0058] Furthermore in certain exemplary embodiments, aspects of the airflow through the third stream (e.g., airstream, mixing, or exhaust properties), and thereby the aforementioned exemplary percent contribution to total thrust, may passively adjust during engine operation or be modified purposefully through use of engine control features (such as fuel flow, electric machine power, variable stators, variable inlet guide vanes, valves, variable exhaust geometry, or fluidic features) to adjust or optimize overall system performance across a broad range of potential operating conditions.

[0059] The term "takeoff power level" refers to a power level of a gas turbine engine used during a maximum steady state permitted power level during a standard day operating condition, as may be documented in a Federal Aviation Administration ("FAA")-type certificate data sheet (e.g., an FAA certification data sheet, a European Aviation Safety Agency ("EASA") data sheet, or the like).

[0060] The term "output power" of a gas turbine engine, with respect to a turboprop or turboshaft gas turbine engine, refers to a brake horsepower providing to an output shaft (e.g., a propeller shaft of a propeller assembly, or an output drive shaft **1224** of a turboprop engine) when the during operation of the gas turbine engine at a takeoff power level. The output power of a gas turbine engine is sometimes also referred to as an output power of a turbomachine in the context of a turboprop or turboshaft gas turbine engine.

[0061] As used herein, the "maximum steady state permitted power level" refers to a maximum permitted power level for any steady state duration of time (e.g., a maximum take off power, a maximum 5 minute take off power, or other lowest duration permitted power). As used herein, the "maximum steady state permitted power level" does not refer to any transient operating conditions, one engine inoperable operating conditions, or the like.

[0062] The term "standard day operating condition" refers to ambient conditions of sea level altitude, 59 degrees Fahrenheit, and 60 percent relative humidity.

[0063] The term "overall pressure ratio" of a compressor section refers to a ratio of a pressure at an outlet of a last stage of compression (prior to combustion) to a pressure at an inlet of the compressor section (prior to any compression in the compressor section). Unless specified otherwise, the overall pressure ratio is defined when the engine is operated at a takeoff power level.

[0064] The term "propulsive efficiency" refers to an efficiency with which the energy contained in an engine's fuel is converted into kinetic energy for the vehicle incorporating the engine, to accelerate it, or to replace losses due to aerodynamic drag or gravity.

[0065] The term maximum exhaust gas temperature (referred to herein as "maximum EGT") refers to a maximum permitted takeoff temperature (i.e., when operated at a maximum steady state permitted power level) documented in a Federal Aviation Administration ("FAA")-type certificate data sheet (e.g., an FAA certification data sheet, a European Aviation Safety Agency ("EASA") data sheet, or the like). For example, in certain exemplary embodiments, the term maximum EGT may refer to a maximum permitted takeoff temperature of an airflow after a first stage stator downstream of an HP turbine of an engine that the engine is rated to withstand.

[0066] For example, with reference to the exemplary engine **100** discussed below with reference to FIG. **2**, the term maximum EGT refers to a maximum permitted takeoff temperature of an airflow after the first stator **208** downstream of the last stage of rotor blades **206** of the HP turbine **132** (at location **215** into the first of the plurality of LP turbine rotor blades **210**). In embodiments wherein the engine is configured as a three spool engine (as compared to the two spool engine of FIG. **2**; see FIG. **12**), the term maximum EGT refers to a maximum permitted takeoff temperature of an airflow after the first stator downstream of the last stage of rotor blades of the intermediate speed turbine (see intermediate speed turbine **516** of the engine **500** of FIG. **12**).

[0067] For example, with reference to the exemplary engine **610** discussed below with reference to FIGS. **13** and **14**, the term maximum EGT refers to a maximum permitted takeoff temperature of an airflow after a first stator downstream of a last stage of rotor blades of the intermediate pressure turbine **620** (at a location into a first of the plurality of low pressure turbine rotor blades of the low pressure turbine **630**). In embodiments wherein the engine is configured as a two spool engine (as compared to the three spool engine of FIGS. **13** and **14** see, e.g., FIG. **20**), the term maximum EGT refers to a maximum permitted takeoff temperature of an airflow after a first stator downstream of the last stage of rotor blades of the high pressure turbine **628** (at a location into a first of the plurality of low pressure turbine rotor blades of the low pressure turbine **630**).

[0068] The term EGT is sometimes also referred to as an indicated turbine exhaust gas temperature or indicated turbine temperature, and the term maximum EGT is sometimes also referred to as a redline EGT.

[0069] The term maximum drive turbine shaft torque (T_{OUT}) refers to a torque on a shaft of a gas turbine engine on a high speed side of a power gearbox of the gas turbine engine (which typically is the shaft coupled to the low pressure turbine) when the gas turbine engine is operated at a maximum steady state permitted power level documented in an FAA-type certificate data sheet (e.g., an FAA certification data sheet, a European Aviation Safety Agency ("EASA") data sheet, or the like). As will be appreciated, the torque on the drive turbine shaft may be determined using an output power (P_{OUT}; in kilowatts, or "kW") of a drive turbine (e.g., of a low pressure turbine in the embodiments described herein) coupled to the drive turbine shaft and rotational speed (N; in revolutions per minute, or "rpm") of the drive turbine, using the equation: $T_{OUT}=9{,}548.8\times P_{OUT}/N$.

[0070] Generally, a turbofan engine includes a fan and a turbomachine, with the turbomachine rotating the fan to generate thrust. The turbomachine includes a compressor section, a combustion section, a turbine section, and an exhaust section and defines a working gas flowpath therethrough. A relatively small amount of thrust may also be generated by an airflow exiting the working gas flowpath of the turbomachine through the exhaust section. In addition, certain turbofan engines may further include a third stream that contributes to a total thrust output of the turbofan engine, potentially allowing for a reduction in size of a core of the turbomachine for a given total turbofan engine thrust output.

[0071] Conventional turbofan engine design practice has limited a compressor pressure ratio based at least in part on the gas temperatures at the exit stage of a high pressure compressor. These relatively high temperatures at the exit of the high pressure compressor may also be avoided when they result in prohibitively high temperatures at an inlet to the turbine section, as well as when they result in prohibitively high exhaust gas temperatures through the exhaust section. For a desired turbofan engine thrust output produced from an increased pressure ratio across the high pressure compressor, there is an increase in the gas temperature at the compressor exit, at a combustor inlet, at the turbine section inlet, and through an exhaust section of the turbofan engine.

[0072] The inventors have recognized that there are generally three approaches to making a gas turbine engine capable of operating at higher temperatures while providing a net benefit to engine performance: reducing the temperature of a gas used to cool core components, utilizing materials capable of withstanding higher operating temperature conditions, or a combination thereof.

[0073] Referring to the case of an engine that utilizes cooled cooling air for operating at higher temperatures, the inventors of the present disclosure discovered, unexpectedly, that the costs associated with achieving a higher compression by reducing gas temperatures used to cool core components to accommodate higher core gas temperatures may indeed produce a net benefit, contrary to prior expectations in the art. The inventors discovered during the course of designing several engine architectures of varying thrust classes and mission requirements (including the engines illustrated and described in detail herein) a relationship exists among the exhaust gas passing through the exhaust section, the desired maximum thrust for the engine, and the size of the exit stage of the high pressure compressor, whereby including this technology produces a net benefit. Previously it was thought that the cost for including a technology to reduce the temperature of gas intended for cooling compressor and turbine components was too prohibitive, as compared to the benefits of increasing the core temperatures.

[0074] For example, the inventors of the present disclosure found that a cooled cooling air system may be included while maintaining or even increasing the maximum turbofan engine thrust output, based on this discovery. The cooled cooling air system may receive an airflow from the compressor section, reduce a temperature of the airflow using a heat exchanger, and provide the cooled airflow to one or more components of the turbine section, such as a first stage of high pressure turbine rotor blades. In such a manner, a first stage of high pressure turbine rotor blades may be capable of withstanding increased temperatures by using the cooled cooling air, while providing a net benefit to the turbofan engine, i.e., while taking into consideration the costs associated with accommodations made for the system used to cool the cooling air.

[0075] The inventors reached this conclusion after evaluating potentially negative impacts to engine performance brought on by introduction of a cooled cooling air system. For example, a cooled cooling air system may generally include a duct extending through a diffusion cavity between a compressor exit and a combustor within the combustion section, such that increasing the cooling capacity may concomitantly increase a size of the duct and thus increase a drag or blockage of an airflow through the diffusion cavity, potentially creating problems related to, e.g., combustor aerodynamics. Similarly, a dedicated or shared heat exchanger of the cooled cooling air system may be positioned in a bypass passage of the turbofan engine, which may create an aerodynamic drag or may increase a size of the shared heat exchanger and increase aerodynamic drag. Size and weight increases associated with maintaining certain risk tolerances were also taken into consideration. For example, a cooled cooling air system must be accompanied with adequate safeguards in the event of a burst pipe condition, which safeguards result in further increases in the overall size, complexity, and weight of the system.

[0076] With a goal of arriving at an improved turbofan engine capable of operating at higher temperatures at the compressor exit and turbine inlet, the inventors have proceeded in the manner of designing turbofan engines having an overall pressure ratio, total thrust output, maximum exhaust gas temperature, and the supporting technology characteristics; checking the propulsive efficiency and qualitative turbofan engine characteristics of the designed turbofan engine; redesigning the turbofan engine to have higher or lower compression ratios based on the impact on other aspects of the architecture, total thrust output, maximum exhaust gas temperature, and supporting technology characteristics; rechecking the propulsive efficiency and qualitative turbofan engine characteristics of the redesigned turbofan engine; etc. during the design of several different types of turbofan engines, including the turbofan engines described below with reference to FIGS. **1** and **4** through **8** through **11**, which will now be discussed in greater detail.

[0077] Referring now to FIG. **1**, a schematic cross-sectional view of an engine **100** is provided according to an example embodiment of the present disclosure. Particularly, FIG. **1** provides a turbofan engine having a rotor assembly with a single stage of unducted rotor blades. In such a manner, the rotor assembly may be referred to herein as an "unducted fan," or the entire engine **100** may be referred to as an "unducted turbofan engine." In addition, the engine **100** of FIG. **1** includes a third stream extending from a location downstream of a ducted mid-fan to a bypass passage over the turbomachine, as will be explained in more detail below.

[0078] For reference, the engine **100** defines an axial direction A, a radial direction R, and a circumferential direction C. Moreover, the engine **100** defines an axial centerline or longitudinal axis **112** that extends along the axial direction A. In general, the axial direction A extends parallel to the longitudinal axis **112**, the radial direction R extends outward from and inward to the longitudinal axis **112** in a direction orthogonal to the axial direction A, and the circumferential direction extends three hundred sixty degrees (360°) around the longitudinal axis **112**. The engine **100** extends between a forward end **114** and an aft end **116**, e.g., along the axial direction A.

[0079] The engine **100** includes a turbomachine **120** and a rotor assembly, also referred to a fan section **150**, positioned upstream thereof. Generally, the turbomachine **120** includes, in serial flow order, a compressor section, a combustion section **130**, a turbine section, and an exhaust section. Particularly, as shown in FIG. **1**, the turbomachine **120** includes a core cowl **122** that defines an annular core inlet **124**. The core cowl **122** further encloses at least in part a low pressure system and a high pressure system. For example, the core cowl **122** depicted encloses and supports at least in part a booster or low pressure ("LP") compressor **126** for pressurizing the air that enters the turbomachine **120** through core inlet **124**. A high pressure ("HP"), multi-stage, axial-flow compressor **128** receives pressurized air from the LP compressor **126** and further increases the pressure of the air. The pressurized air stream flows downstream to a combustor of the combustion section **130** where fuel is injected into the pressurized air stream and ignited to raise the temperature and energy level of the pressurized air.

[0080] It will be appreciated that as used herein, the terms "high/low speed" and "high/low pressure" are used with respect to the high pressure/high speed system and low pressure/low speed system interchangeably. Further, it will be appreciated that the terms "high" and "low" are used in this same context to distinguish the two systems, and are not meant to imply any absolute speed and/or pressure values.

[0081] The high energy combustion products flow from the combustion section **130** downstream to a high pressure turbine **132**. The high pressure turbine **132** drives the high pressure compressor **128** through a high pressure shaft **136**. In this regard, the high pressure turbine **132** is drivingly coupled with the high pressure compressor **128**. As will be appreciated, the high pressure compressor **128**, the combustion section **130**, and the high pressure turbine **132** may collectively be referred to as the "core" of the engine **100**. The high energy combustion products then flow to a low pressure turbine **134**. The low pressure turbine **134** drives the low pressure compressor **126** and components of the fan section **150** through a low pressure shaft **138**. In this regard, the low pressure turbine **134** is drivingly coupled with the low pressure compressor **126** and components of the fan section **150**. The LP shaft **138** is coaxial with the HP shaft **136** in this example embodiment. After driving each of the turbines **132**, **134**, the combustion products exit the turbomachine **120** through a turbomachine exhaust nozzle **140**.

[0082] Accordingly, the turbomachine **120** defines a working gas flowpath or core duct **142** that extends between the core inlet **124** and the turbomachine exhaust nozzle **140**. The working gas flowpath **142** is an annular duct positioned generally inward of the core cowl **122** along the radial direction R. The working gas flowpath **142** (e.g., the working gas flowpath through the turbomachine **120**) may be referred to as a second stream.

[0083] The fan section **150** includes a fan **152**, which is the primary fan in this example embodiment. For the depicted embodiment of FIG. **1**, the fan **152** is an open rotor or unducted fan **152**. In such a manner, the engine **100** may be referred to as an open rotor engine.

[0084] As depicted, the fan **152** includes an array of fan blades **154** (only one shown in FIG. **1**). The fan blades **154** are rotatable, e.g., about the longitudinal axis **112**. As noted above, the fan **152** is drivingly coupled with the low pressure turbine **134** via the LP shaft **138**. For the embodiments shown in FIG. **1**, the fan **152** is coupled with the LP shaft **138** via a speed reduction gearbox **155**, e.g., in an indirect-drive or geared-drive configuration.

[0085] Moreover, the array of fan blades **154** can be arranged in equal spacing around the longitudinal axis **112**. Each fan blade **154** has a root and a tip and a span defined therebetween, and further defines a central blade axis **156**. For this embodiment, each fan blade **154** of the fan **152** is rotatable about its respective central blade axis **156**, e.g., in unison with one another. One or more actuators **158** are provided to facilitate such rotation and therefore may be used to change a pitch of the fan blades **154** about their respective central blades' axes **156**.

[0086] The fan section **150** further includes a fan guide vane array **160** that includes fan guide vanes **162** (only one shown in FIG. **1**) disposed around the longitudinal axis **112**. For this embodiment, the fan guide vanes **162** are not rotatable about the longitudinal axis **112**. Each fan guide vane **162** has a root and a tip and a span defined therebetween. The fan guide vanes **162** may be unshrouded as shown in FIG. **1** or, alternatively, may be shrouded, e.g., by an annular shroud spaced outward from the tips of the fan guide vanes **162** along the radial direction R or attached to the fan guide vanes **162**.

[0087] Each fan guide vane **162** defines a central blade axis **164**. For this embodiment, each fan guide vane **162** of the fan guide vane array **160** is rotatable about its respective central blade axis **164**, e.g., in unison with one another. One or more actuators **166** are provided to facilitate such rotation and therefore may be used to change a pitch of the fan guide vane **162** about its respective central blade axis **164**. However, in other embodiments, each fan guide vane **162** may be fixed or unable to be pitched about its central blade axis **164**. The fan guide vanes **162** are mounted to a fan cowl **170**. Notably, the engine **100** defines a bypass passage **194** over the fan cowl **170** and core cowl **122**.

[0088] As shown in FIG. **1**, in addition to the fan **152**, which is unducted, a ducted fan **184** is included aft of the fan **152**, such that the engine **100** includes both a ducted and an unducted fan which both serve to generate thrust through the movement of air without passage through at least a portion

of the turbomachine **120** (e.g., without passage through the HP compressor **128** and combustion section for the embodiment depicted). The ducted fan **184** is rotatable about the same axis (e.g., the longitudinal axis **112**) as the fan **152**. The ducted fan **184** is, for the embodiment depicted, driven by the low pressure turbine **134** (e.g. coupled to the LP shaft **138**). In the embodiment depicted, as noted above, the fan **152** may be referred to as the primary fan, and the ducted fan **184** may be referred to as a secondary fan. It will be appreciated that these terms "primary" and "secondary" are terms of convenience, and do not imply any particular importance, power, or the like.

[0089] The ducted fan **184** includes a plurality of fan blades (not separately labeled in FIG. **1**) arranged in a single stage, such that the ducted fan **184** may be referred to as a single stage fan. The fan blades of the ducted fan **184** can be arranged in equal spacing around the longitudinal axis **112**. Each blade of the ducted fan **184** has a root and a tip and a span defined therebetween.

[0090] The fan cowl **170** annularly encases at least a portion of the core cowl **122** and is generally positioned outward of at least a portion of the core cowl **122** along the radial direction R. Particularly, a downstream section of the fan cowl **170** extends over a forward portion of the core cowl **122** to define a fan duct flowpath, or simply a fan duct **172**. According to this embodiment, the fan duct flowpath or fan duct **172** may be understood as forming at least a portion of the third stream of the engine **100**.

[0091] Incoming air may enter through the fan duct **172** through a fan duct inlet **176** and may exit through a fan exhaust nozzle **178** to produce propulsive thrust. The fan duct **172** is an annular duct positioned generally outward of the working gas flowpath **142** along the radial direction R. The fan cowl **170** and the core cowl **122** are connected together and supported by a plurality of substantially radially-extending, circumferentially-spaced stationary struts **174** (only one shown in FIG. **1**). The stationary struts **174** may each be aerodynamically contoured to direct air flowing thereby. Other struts in addition to the stationary struts **174** may be used to connect and support the fan cowl **170** and/or core cowl **122**. In many embodiments, the fan duct **172** and the working gas flowpath **142** may at least partially co-extend (generally axially) on opposite sides (e.g., opposite radial sides) of the core cowl **122**. For example, the fan duct **172** and the working gas flowpath **142** may each extend directly from a leading edge **144** of the core cowl **122** and may partially co-extend generally axially on opposite radial sides of the core cowl **122**.

[0092] The engine **100** also defines or includes an inlet duct **180**. The inlet duct **180** extends between an engine inlet **182** and the core inlet **124**/fan duct inlet **176**. The engine inlet **182** is defined generally at the forward end of the fan cowl **170** and is positioned between the fan **152** and the fan guide vane array **160** along the axial direction A. The inlet duct **180** is an annular duct that is positioned inward of the fan cowl **170** along the radial direction R. Air flowing downstream along the inlet duct **180** is split, not necessarily evenly, into the working gas flowpath **142** and the fan duct **172** by the leading edge **144** of the core cowl **122**. The inlet duct **180** is wider than the working gas flowpath **142** along the radial direction R. The inlet duct **180** is also wider than the fan duct **172** along the radial direction R. The secondary fan **184** is positioned at least partially in the inlet duct **180**.

[0093] Notably, for the embodiment depicted, the engine **100** includes one or more features to increase an efficiency of a third stream thrust, Fn_{3S} (e.g., a thrust generated by an airflow through the fan duct **172** exiting through the fan exhaust nozzle **178**, generated at least in part by the ducted fan **184**). In particular, the engine **100** further includes an array of inlet guide vanes **186** positioned in the inlet duct **180** upstream of the ducted fan **184** and downstream of the engine inlet **182**. The array of inlet guide vanes **186** are arranged around the longitudinal axis **112**. For this embodiment, the inlet guide vanes **186** are not rotatable about the longitudinal axis **112**. Each inlet guide vane **186** defines a central blade axis (not labeled for clarity), and is rotatable about its respective central blade axis, e.g., in unison with one another. In such a manner, the inlet guide vanes **186** may be considered a variable geometry component. One or more actuators **188** are provided to facilitate such rotation and therefore may be used to change a pitch of the inlet guide vanes **186** about their respective central blade axes. However, in other embodiments, each inlet guide vane **186** may be fixed or unable to be pitched about its central blade axis.

[0094] Further, located downstream of the ducted fan **184** and upstream of the fan duct inlet **176**, the engine **100** includes an array of outlet guide vanes **190**. As with the array of inlet guide vanes **186**, the array of outlet guide vanes **190** are not rotatable about the longitudinal axis **112**. However, for the embodiment depicted, unlike the array of inlet guide vanes **186**, the array of outlet guide vanes **190** are configured as fixed-pitch outlet guide vanes.

[0095] Further, it will be appreciated that for the embodiment depicted, the fan exhaust nozzle **178** of the fan duct **172** is further configured as a variable geometry exhaust nozzle. In such a manner, the engine **100** includes one or more actuators **192** for modulating the variable geometry exhaust nozzle. For example, the variable geometry exhaust nozzle may be configured to vary a total cross-sectional area (e.g., an area of the nozzle in a plane perpendicular to the longitudinal axis **112**) to modulate an amount of thrust generated based on one or more engine operating conditions (e.g., temperature, pressure, mass flowrate, etc. of an airflow through the fan duct **172**). A fixed geometry exhaust nozzle may also be adopted.

[0096] The combination of the array of inlet guide vanes **186** located upstream of the ducted fan **184**, the array of outlet guide vanes **190** located downstream of the ducted fan **184**, and the fan exhaust nozzle **178** may result in a more efficient generation of third stream thrust, Fn_{3S}, during one or more engine operating conditions. Further, by introducing a variability in the geometry of the inlet guide vanes **186** and the fan exhaust nozzle **178**, the engine **100** may be capable of generating more efficient third stream thrust, Fn_{3S}, across a relatively wide array of engine operating conditions, including takeoff and climb as well as cruise.

[0097] Moreover, referring still to FIG. **1**, in exemplary embodiments, air passing through the fan duct **172** may be relatively cooler (e.g., lower temperature) than one or more fluids utilized in the turbomachine **120**. In this way, one or more heat exchangers **196** may be positioned in thermal communication with the fan duct **172**. For example, one or more heat exchangers **196** may be disposed within the fan duct **172** and utilized to cool one or more fluids from the core engine with the air passing through the fan duct **172**, as a resource for removing heat from a fluid, e.g., compressor bleed air, oil or fuel.

[0098] Although not depicted, the heat exchanger **196** may be an annular heat exchanger extending *substantially* **360** *degrees* in the fan duct **172** (e.g., at least 300 degrees, such as at least 330 degrees). In such a manner, the heat exchanger **196** may effectively utilize the air passing through the fan duct **172** to cool one or more systems of the engine **100** (e.g., a cooled cooling air system (described below), lubrication oil systems, compressor bleed air, electrical components, etc.). The heat exchanger **196** uses the air passing through duct **172** as a heat sink and correspondingly increases the temperature of the air downstream of the heat exchanger **196** and exiting the fan exhaust nozzle **178**.

[0099] As will be appreciated, the engine **100** defines a total sea level static thrust output Fn_{Total}, corrected to standard day conditions, which is generally equal to a maximum total engine thrust. It will be appreciated that "sea level static thrust corrected to standard day conditions" refers to an amount of thrust an engine is capable of producing while at rest relative to the earth and the surrounding air during standard day operating conditions.

[0100] The total sea level static thrust output Fn_{Total} may generally be equal to a sum of: a fan stream thrust FnFan (i.e., an amount of thrust generated by the fan **152** through the bypass passage **194**), the third stream thrust Fn_{3S} (i.e., an amount of thrust generated through the fan duct **172**), and a turbomachine thrust Fn_{TM} (i.e., an amount of thrust generated by an airflow through the turbomachine exhaust nozzle **140**), each during the static, sea level, standard day conditions. The engine **100** may define a total sea level static thrust output Fn_{Total} greater than or equal to 15,000 pounds. For example, it will be appreciated that the engine 100 may be configured to generate at least 25,000 pounds and less than 80,000 pounds, such as between 25,000 and 50,000 pounds, such as between 35,000 and 45,000 pounds of thrust during a takeoff operating power, corrected to standard day sea level conditions.

[0101] As will be appreciated, the engine **100** defines a maximum exhaust gas temperature (referred to herein as "EGT"), which is defined above, and for the embodiment of FIG. **1** refers to a maximum permitted takeoff temperature of an airflow after the first stator **208** downstream of the last stage of rotor blades **206** of the HP turbine **132** (at location **215** into the first of the plurality of LP turbine rotor blades **210**; see FIG. **2**).

[0102] Referring now to FIG. **2**, a close-up, simplified, schematic view of a portion of the engine **100** of FIG. **1** is provided. The engine **100**, as noted above includes the turbomachine **120** having the LP compressor **126**, the HP compressor **128**, the combustion section **130**, the HP turbine **132**, and the LP turbine **134**. The LP compressor **126** includes a plurality of stages of LP compressor rotor blades **198** and a plurality of stages of LP compressor stator vanes **200** alternatingly spaced with the plurality of stages of LP compressor rotor blades **198**. Similarly, the HP compressor **128** includes a plurality of stages of HP compressor rotor blades **202** and a plurality of stages of HP compressor stator vanes **204** alternatingly spaced with the plurality of stages of HP compressor rotor blades **202**. Moreover, within the turbine section, the HP turbine **132** includes at least one stage of HP turbine rotor blades **206** and at least one stage of HP turbine stator vanes **208**, and the LP turbine **134** includes a plurality of stages of LP turbine rotor blades **210** and a plurality of stages of LP turbine stator vanes **212** alternatingly spaced with the plurality of stages of LP turbine rotor blades **210**. With reference to the HP turbine **132**, the HP turbine **132** includes at least a first stage **214** of HP turbine rotor blades **206**.

[0103] Referring particularly to the HP compressor **128**, the plurality of stages of HP compressor rotor blades **202** includes an aftmost stage **216** of HP compressor rotor blades **202**. Referring briefly to FIG. **3**, a close-up view of an HP compressor rotor blade **202** in the aftmost stage **216** of HP compressor rotor blades **202** is provided. As will be appreciated, the HP compressor rotor blade **202** includes a trailing edge **218** and the aftmost stage **216** of HP compressor rotor blades **202** includes a rotor **220** having a base **222** to which the HP compressor rotor blade **202** is coupled. The base **222** includes a flowpath surface **224** defining in part the working gas flow path **142** through the HP compressor **128**. Moreover, the HP compressor **128** includes a shroud or liner **226** located outward of the HP compressor rotor blade **202** along the radial direction R. The shroud or liner **226** also includes a flowpath surface **228** defining in part the working gas flow path **142** through the HP compressor **128**.

[0104] The engine **100** (FIG. **3**) defines a reference plane **230** intersecting with an aft-most point of the trailing edge **218** of the HP compressor rotor blade **202** depicted, the reference plane **230** being orthogonal to the axial direction A. Further, the HP compressor **128** defines a high pressure compressor exit area ($A_{HPCExit}$) within the reference plane **230**. More specifically, the HP compressor **128** defines an inner radius (R_{INNER}) extending along the radial direction R within the reference plane **230** from the longitudinal axis **112** to the flowpath surface **224** of the base **222** of the rotor **220** of the aftmost stage **216** of HP compressor rotor blades **202**, as well as an outer radius (R_{OUTER}) extending along the radial direction R within the reference plane **230** from the longitudinal axis **112** to the flowpath surface **228** of the shroud or liner **226**. The HP compressor **128** exit area is defined according to Expression (1):

$$A_{HPCExit} = \pi\left(R_{OUTER}^2 - R_{INNER}^2\right). \qquad \text{Expression (1)}$$

[0105] The inventors of the present disclosure have found that for a given total thrust output (Fn_{Total}), a decrease in size of the high pressure compressor exit area ($A_{HPCExit}$) may generally relate in an increase in a compressor exit temperature (i.e., a temperature of the airflow through the working gas flowpath **142** at the reference plane **230**), a turbine inlet temperature (i.e., a temperature of the airflow through the working gas flowpath **142** provided to the first stage **214** of HP turbine rotor blades **206**; see FIG. **2**), and the maximum exhaust gas temperature (EGT). In particular, the inventors of the present disclosure have found that the high pressure compressor exit area ($A_{HPCExit}$) may generally be used as an indicator of the above temperatures to be achieved by the engine **100** during operation for a given total thrust output (Fn_{Total}) of the engine **100**.

[0106] Referring back to FIG. **2**, the exemplary engine **100** depicted includes one or more technologies to accommodate the relatively small high pressure compressor exit area ($A_{HPCExit}$) for the total thrust output (Fn_{Total}) of the engine **100**. In particular, for the embodiment depicted, the exemplary engine **100** includes a cooled cooling air system **250**. The exemplary cooled cooling air system **250** is in fluid communication with the HP compressor **128** and the first

stage **214** of HP turbine rotor blades **206**. More specifically, for the embodiment depicted, the cooled cooling air system **250** includes a duct assembly **252** and a cooled cooling air (CCA) heat exchanger **254**. The duct assembly **252** is in fluid communication with the HP compressor **128** for receiving an airflow from the HP compressor **128** and providing such airflow to the first stage **214** of HP turbine rotor blades **206** during operation of the engine **100**. The CCA heat exchanger **254** is in thermal communication with the airflow through the duct assembly **252** for reducing a temperature of the airflow through the duct assembly **252** upstream of the first stage **214** of HP turbine rotor blades **206**.

[0107] Briefly, as will be explained in more detail below, the engine **100** depicted further includes a thermal transport bus **300**, with the CCA heat exchanger **254** of the cooled cooling air system **250** in thermal communication with, or integrated into, the thermal transport bus **300**. For the embodiment depicted, the engine **100** further includes the heat exchanger **196** in the fan duct **172** in thermal communication with, or integrated into, the thermal transport bus **300**, such that heat from the CCA heat exchanger **254** of the cooled cooling air system **250** may be transferred to the heat exchanger **196** in the fan duct **172** using the thermal transport bus **300**.

[0108] Referring now to FIG. **4**, a close-up, schematic view of the turbomachine **120** of the engine **100** of FIG. **2**, including the cooled cooling air system **250**, is provided.

[0109] As is shown, the turbine section includes a compressor casing **256**, and the combustion section **130** of the turbomachine **120** generally includes an outer combustor casing **258**, an inner combustor casing **260**, and a combustor **262**. The combustor **262** generally includes an outer combustion chamber liner **264** and an inner combustion chamber liner **266**, together defining at least in part a combustion chamber **268**. The combustor **262** further includes a fuel nozzle **270** configured to provide a mixture of fuel and air to the combustion chamber **268** to generate combustion gases.

[0110] The engine **100** further includes a fuel delivery system **272** including at least a fuel line **274** in fluid communication with the fuel nozzle **270** for providing fuel to the fuel nozzle **270**.

[0111] The turbomachine **120** includes a diffuser nozzle **276** located downstream of the aftmost stage **216** of HP compressor rotor blades **202** of the HP compressor **128**, within the working gas flowpath **142**. In the embodiment depicted, the diffuser nozzle **276** is coupled to, or integrated with the inner combustor casing **260**, the outer combustor casing **258**, or both. The diffuser nozzle **276** is configured to receive compressed airflow from the HP compressor **128** and straighten such compressed air prior to such compressed air being provided to the combustion section **130**. The combustion section **130** defines a diffusion cavity **278** downstream of the diffuser nozzle **276** and upstream of the combustion chamber **268**.

[0112] As noted above, the exemplary engine **100** further includes the cooled cooling air system **250**. The cooled cooling air system **250** includes the duct assembly **252** and the CCA heat exchanger **254**. More specifically, the duct assembly **252** includes a first duct **280** in fluid communication with the HP compressor **128** and the CCA heat exchanger **254**. The first duct **280** more specifically extends from the HP compressor **128**, through the compressor casing **256**, to the CCA heat exchanger **254**. For the embodiment depicted, the first duct **280** is in fluid communication with the HP compressor **128** at a location in between the last two stages of HP compressor rotor blades **202**. In such a manner, the first duct **280** is configured to receive a cooling airflow from the HP compressor **128** and to provide the cooling airflow to the CCA heat exchanger **254**.

[0113] It will be appreciated, however, that in other embodiments, the first duct **280** may additionally or alternatively be in fluid communication with the HP compressor **128** at any other suitable location, such as at any other location closer to a downstream end of the HP compressor **128** than an upstream end of the HP compressor **128**, or alternatively at a location closer to the upstream end of the HP compressor **128** than the downstream end of the HP compressor **128**.

[0114] The duct assembly **252** further includes a second duct **282** extending from the CCA heat exchanger **254** to the outer combustor casing **258** and a third duct **284** extending from the outer combustor casing **258** inwardly generally along the radial direction R. The CCA heat exchanger **254** may be configured to receive the cooling airflow and to extract heat from the cooling airflow to reduce a temperature of the cooling airflow. The second duct **282** may be configured to receive cooling airflow from the CCA heat exchanger **254** and provide the cooling airflow to the third duct **284**. The third duct **284** extends through the diffusion cavity generally along the radial direction R.

[0115] Moreover, for the embodiment depicted, the duct assembly **252** further includes a manifold **286** in fluid communication with the third duct **284** and a fourth duct **288**. The manifold **286** extends generally along the circumferential direction C of the engine **100**, and the fourth duct **288** is more specifically a plurality of fourth ducts **288** extending from the manifold **286** at various locations along the circumferential direction C forward generally along the axial direction A towards the turbine section. In such a manner, the duct assembly **252** of the cooled cooling air system **250** may be configured to provide cooling airflow to the turbine section at a variety of locations along the circumferential direction C.

[0116] Notably, referring still to FIG. **4**, the combustion section **130** includes an inner stator assembly **290** located at a downstream end of the inner combustion chamber liner **266**, and coupled to the inner combustor casing **260**. The inner stator assembly **290** includes a nozzle **292**. The fourth duct **288**, or rather, the plurality of fourth ducts **288**, are configured to provide the cooling airflow to the nozzle **292**. The nozzle **292** may include a plurality of vanes spaced along the circumferential direction C configured to impart a circumferential swirl to the cooling airflow provided through the plurality of fourth ducts **288** to assist with such airflow being provided to the first stage **214** of HP turbine rotor blades **206**.

[0117] In particular, for the embodiment depicted, the HP turbine **132** further includes a first stage HP turbine rotor **294**, with the plurality of HP turbine rotor blades **206** of the first stage **214** coupled to the first stage HP turbine rotor **294**. The first stage HP turbine rotor **294** defines an internal cavity **296** configured to receive the cooling airflow from the nozzle **292** and provide the cooling airflow to the plurality of HP turbine rotor blades **206** of the first stage **214**. In such a manner, the cooled cooling air system **250** may provide cooling airflow to the HP turbine rotor blades **206** to reduce a temperature of the plurality HP turbine rotor blades **206** at the first stage **214** during operation of the engine **100**.

[0118] For example, in certain exemplary aspects, the cooled cooling air system **250** may be configured to provide a temperature reduction of the cooling airflow equal to at least 15% of the EGT and up to 45% of the EGT. Further, in certain exemplary aspects, the cooled cooling air system **250** may be configured to receive between 2.5% and 35% of an airflow through the working gas flowpath **142** at an inlet to the HP compressor **128**, such as between 3% and 20%, such as between 4% and 15%.

[0119] In addition, as briefly mentioned above, the cooled cooling air system **250** may utilize the thermal transport bus **300** to reject heat from the cooling air extracted from the compressor section of the turbomachine **120**. In particular, for the embodiment shown the CCA heat exchanger **254** is in thermal communication with or integrated into the thermal transport bus **300**. Notably, the thermal transport bus **300** further includes a fuel heat exchanger **302** in thermal communication with the fuel line **274**. In such a manner, the thermal transport bus **300** may extract heat from the cooling air extracted from the compressor section through the cooled cooling air system **250** and provide such heat to a fuel flow through the fuel line **274** upstream of the fuel nozzle **270**.

[0120] For the embodiment depicted, the thermal transport bus **300** includes a conduit having a flow of thermal transport fluid therethrough. More specifically, referring now briefly to FIG. **5**, a schematic view of a thermal transport bus **300** as may be utilized with the exemplary engine **100** described above with reference to FIGS. **1** through **4** is provided.

[0121] The thermal transport bus **300** includes an intermediary heat exchange fluid flowing therethrough and is formed of one or more suitable fluid conduits **304**. The heat exchange fluid may be an incompressible fluid having a high temperature operating range. Additionally, or alternatively, the heat exchange fluid may be a single phase fluid, or alternatively, may be a phase change fluid. In certain exemplary embodiments, the heat exchange fluid may be a supercritical fluid, such as a supercritical CO_2.

[0122] The exemplary thermal transport bus **300** includes a pump **306** in fluid communication with the heat exchange fluid in the thermal transport bus **300** for generating a flow of the heat exchange fluid in/through the thermal transport bus **300**.

[0123] Moreover, the exemplary thermal transport bus **300** includes one or more heat source exchangers **308** in thermal communication with the heat exchange fluid in the thermal transport bus **300**. Specifically, the thermal transport bus **300** depicted includes a plurality of heat source exchangers **308**. The plurality of heat source exchangers **308** are configured to transfer heat from one or more of the accessory systems of an engine within which the thermal transport bus **300** is installed (e.g., engine **100** of FIGS. **1** through **4**) to the heat exchange fluid in the thermal transport bus **300**. For example, in certain exemplary embodiments, the plurality of heat source exchangers **308** may include one or more of: a CCA heat source exchanger (such as CCA heat exchanger **254** in FIGS. **2** and **4**); a main lubrication system heat source exchanger for transferring heat from a main lubrication system; an advanced clearance control (ACC) system heat source exchanger for transferring heat from an ACC system; a generator lubrication system heat source exchanger for transferring heat from the generator lubrication system; an environmental control system (ECS) heat exchanger for transferring heat from an ECS; an electronics cooling system heat exchanger for transferring heat from the electronics cooling system; a vapor compression system heat source exchanger; an air cycle system heat source exchanger; and an auxiliary system(s) heat source exchanger.

[0124] For the embodiment depicted, there are three heat source exchangers **308**. The heat source exchangers **308** are each arranged in series flow along the thermal transport bus **300**. However, in other exemplary embodiments, any other suitable number of heat source exchangers **308** may be included and one or more of the heat source exchangers **308** may be arranged in parallel flow along the thermal transport bus **300** (in addition to, or in the alternative to the serial flow arrangement depicted). For example, in other embodiments there may be a single heat source exchanger **308** in thermal communication with the heat exchange fluid in the thermal transport bus **300**, or alternatively, there may be at least two heat source exchangers **308**, at least four heat source exchangers **308**, at least five heat source exchangers **308**, or at least six heat source exchangers **308**, and up to twenty heat source exchangers **308** in thermal communication with heat exchange fluid in the thermal transport bus **300**.

[0125] Additionally, the exemplary thermal transport bus **300** of FIG. **5** further includes one or more heat sink exchangers **310** permanently or selectively in thermal communication with the heat exchange fluid in the thermal transport bus **300**. The one or more heat sink exchangers **310** are located downstream of the plurality of heat source exchangers **308** and are configured for transferring heat from the heat exchange fluid in the thermal transport bus **300**, e.g., to atmosphere, to fuel, to a fan stream, etc. For example, in certain embodiments the one or more heat sink exchangers **310** may include at least one of a RAM heat sink exchanger, a fuel heat sink exchanger, a fan stream heat sink exchanger, a bleed air heat sink exchanger, an engine intercooler heat sink exchanger, a bypass passage heat sink exchanger, or a cold air output heat sink exchanger of an air cycle system. The fuel heat sink exchanger is a "fluid to heat exchange fluid" heat exchanger wherein heat from the heat exchange fluid is transferred to a stream of liquid fuel (see, e.g., fuel heat exchanger **302** of the engine **100** of FIG. **4**). Moreover, the fan stream heat sink exchanger is generally an "air to heat exchange fluid" heat exchanger which transfers heat from the heat exchange fluid to an airflow through the fan stream (see, e.g., heat exchanger **196** of FIGS. **1** and **2**). Further, the bleed air heat sink exchanger is generally an "air to heat exchange fluid" heat exchanger which flows, e.g., bleed air from the LP compressor **126** over the heat exchange fluid to remove heat from the heat exchange fluid.

[0126] For the embodiment of FIG. **5**, the one or more heat sink exchangers **310** of the thermal transport bus **300** depicted includes a plurality of individual heat sink exchangers **310**. More particularly, for the embodiment of FIG. **5**, the one or more heat sink exchangers **310** include three heat sink exchangers **310** arranged in series. The three heat sink exchangers **310** are configured as a bypass passage heat sink exchanger, a fuel heat sink exchanger, and a fan stream heat sink exchanger. However, in other exemplary embodiments, the one or more heat sink exchangers **310** may include any other suitable number and/or type of heat sink exchangers **310**. For example, in other exemplary embodiments, a single heat sink exchanger **310** may be provided, at least two heat sink exchangers **310** may be provided, at least four heat sink exchangers **310** may be provided, at least five heat sink exchangers **310** may be

provided, or up to twenty heat sink exchangers **310** may be provided. Additionally, in still other exemplary embodiments, two or more of the one or more heat sink exchangers **310** may alternatively be arranged in parallel flow with one another.

[0127] Referring still to the exemplary embodiment depicted in FIG. **5**, one or more of the plurality of heat sink exchangers **310** and one or more of the plurality of heat source exchangers **308** are selectively in thermal communication with the heat exchange fluid in the thermal transport bus **300**. More particularly, the thermal transport bus **300** depicted includes a plurality of bypass lines **312** for selectively bypassing each heat source exchanger **308** and each heat sink exchanger **310** in the plurality of heat sink exchangers **310**. Each bypass line **312** extends between an upstream juncture **314** and a downstream juncture **316**—the upstream juncture **314** located just upstream of a respective heat source exchanger **308** or heat sink exchanger **310**, and the downstream juncture **316** located just downstream of the respective heat source exchanger **308** or heat sink exchanger **310**.

[0128] Additionally, each bypass line **312** meets at the respective upstream juncture **314** with the thermal transport bus **300** via a three-way valve **318**. The three-way valves **318** each include an inlet fluidly connected with the thermal transport bus **300**, a first outlet fluidly connected with the thermal transport bus **300**, and a second outlet fluidly connected with the bypass line **312**. The three-way valves **318** may each be a variable throughput three-way valve, such that the three-way valves **318** may vary a throughput from the inlet to the first and/or second outlets. For example, the three-way valves **318** may be configured for providing anywhere between zero percent (0%) and one hundred percent (100%) of the heat exchange fluid from the inlet to the first outlet, and similarly, the three-way valves **318** may be configured for providing anywhere between zero percent (0%) and one hundred percent (100%) of the heat exchange fluid from the inlet to the second outlet.

[0129] Notably, the three-way valves **318** may be in operable communication with a controller of an engine including the thermal transport bus **300** (e.g., engine **100** of FIGS. **1** through **4**).

[0130] Further, each bypass line **312** also meets at the respective downstream juncture **316** with the thermal transport bus **300**. Between each heat source exchanger **308** or heat sink exchanger **310** and downstream juncture **316**, the thermal transport bus **300** includes a check valve **320** for ensuring a proper flow direction of the heat exchange fluid. More particularly, the check valve **320** prevents a flow of heat exchange fluid from the downstream juncture **316** towards the respective heat source exchanger **308** or heat sink exchanger **310**.

[0131] As alluded to earlier, the inventors discovered, unexpectedly during the course of gas turbine engine design—i.e., designing gas turbine engines having a variety of different high pressure compressor exit areas, total thrust outputs, maximum exhaust gas temperatures, and supporting technology characteristics and evaluating an overall engine performance and other qualitative turbofan engine characteristics-a significant relationship between a total sea level static thrust output, a compressor exit area, and a maximum exhaust gas temperature that enables increased engine core operating temperatures and overall engine propulsive efficiency. The relationship can be thought of as an indicator of the ability of a turbofan engine to have a reduced weight or volume as represented by a high pressure compressor exit area, while maintaining or even improving upon an overall thrust output, and without overly detrimentally affecting overall engine performance and other qualitative turbofan engine characteristics. The relationship applies to an engine that incorporates a cooled cooling air system, builds portions of the core using material capable of operating at higher temperatures, or a combination of the two. Significantly, the relationship ties the core size (as represented by the exit area of the higher pressure compressor) to the desired thrust and exhaust gas temperature associated with the desired propulsive efficiency and practical limitations of the engine design, as described below.

[0132] Referring to the case of an engine that utilizes cooled cooling air for operating at higher temperatures, the inventors discovered, unexpectedly, that the costs associated with achieving a higher compression, enabled by reducing gas temperatures used to cool core components to accommodate higher core gas temperatures, may indeed produce a net benefit, contrary to expectations in the art. Referring to the case of utilizing more temperature-resistant material, such as a Carbon Matrix Composite (CMC), it was found that certain aspects of the engine size, weight and operating characteristics can be positively affected while taking into account the complexities and/or drawbacks associated with such material. In either case, the relationship now described can apply to identify the interrelated operating conditions and core size—i.e., total sea level static thrust, maximum exhaust gas temperature, and compressor exit area, respectively.

[0133] The inventors of the present disclosure discovered bounding the relationship between a product of total thrust output and maximum exhaust gas temperature at a takeoff power level and the high pressure compressor exit area squared (corrected specific thrust) can result in a higher power density core. This bounded relationship, as described herein, takes into due account the amount of overall complexity and cost, and/or a low amount of reliability associated with implementing the technologies required to achieve the operating temperatures and exhaust gas temperature associated with the desired thrust levels. The amount of overall complexity and cost may be prohibitively high for gas turbine engines outside the bounds of the relationship as described herein, and/or the reliability may prohibitively low outside the bounds of the relationship as described herein. The relationship discovered, infra, can therefore identify an improved engine configuration suited for a particular mission requirement, one that takes into account efficiency, weight, cost, complexity, reliability, and other factors influencing the optimal choice for an engine configuration.

[0134] In addition to yielding an improved gas turbine engine, as explained in detail above, utilizing this relationship, the inventors found that the number of suitable or feasible gas turbine engine designs capable of meeting the above design requirements could be greatly diminished, thereby facilitating a more rapid down selection of designs to consider as a gas turbine engine is being developed. Such a benefit provides more insight to the requirements for a given gas turbine engine well before specific technologies, integration and system requirements are developed fully. Such a benefit avoids late-stage redesign.

[0135] The desired relationship providing for the improved gas turbine engine, discovered by the inventors, is expressed as:

$$CST = Fn_{Total} \times EGT/(A^2_{HPCExit} \times 1000), \quad \text{Expression (2)}$$

where CST is corrected specific thrust; Fn_{Total} is a total sea level static thrust output of the gas turbine engine in pounds; EGT is maximum exhaust gas temperature in degrees Celsius; and $A_{HPCExit}$ is a high pressure compressor exit area in square inches.

[0136] CST values of an engine defined by Expression (2) in accordance with various embodiments of the present disclosure are from 42 to 90, such as from 45 to 80, such as from 50 to 80. The units of the CST values may be pounds-degrees Celsius over square inches.

[0137] Referring now to FIGS. **6** and **7**, various exemplary gas turbine engines are illustrated in accordance with one or more exemplary embodiments of the present disclosure. In particular, FIG. **6** provides a table including numerical values corresponding to several of the plotted gas turbine engines in FIG. **7**. FIG. **7** is a plot **400** of gas turbine engines in accordance with one or more exemplary embodiments of the present disclosure, showing the CST on a Y-axis **402** and the EGT on an X-axis **404**.

[0138] As shown, the plot **400** in FIG. **7** depicts a first range **406**, with the CST values between 42 and 90 and EGT values from 800 degrees Celsius to 1400 degrees Celsius. FIG. **7** additionally depicts a second range **408**, with the CST values between 50 and 80 and EGT values from 1000 degrees Celsius to 1300 degrees Celsius. It will be appreciated that in other embodiments, the EGT value may be greater than 1100degree Celsius and less than 1250 degrees Celsius, such as greater than 1150 degree Celsius and less than 1250 degrees Celsius, such as greater than 1000 degree Celsius and less than 1300 degrees Celsius.

[0139] It will be appreciated that although the discussion above is generally related to an open rotor engine having a particular cooled cooling air system **250** (FIG. **2**), in various embodiments of the present disclosure, the relationship outlined above with respect to Expression (2) may be applied to any other suitable engine architecture, including any other suitable technology (ies) to allow the gas turbine engine to accommodate higher temperatures to allow for a reduction in the high pressure compressor exit area, while maintaining or even increasing the maximum turbofan engine thrust output without, e.g., prematurely wearing various components within the turbomachine exposed the working gas flowpath.

[0140] For example, reference will now be made to FIG. **8**. FIG. **8** provides a schematic view of an engine **100** in accordance with another exemplary embodiment of the present disclosure. The exemplary embodiment of FIG. **8** may be configured in substantially the same manner as the exemplary engine **100** described above with respect to FIGS. **1** through **4**, and the same or similar reference numerals may refer to the same or similar parts. However, as will be appreciated, for the embodiment shown, the engine **100** further includes an outer housing or nacelle **298** circumferentially surrounding at least in part a fan section **150** and a turbomachine **120**. The nacelle **298** defines a bypass passage **194** between the nacelle **298** and the turbomachine **120**.

[0141] Briefly, it will be appreciated that the exemplary engine **100** of FIG. **8** is configured as a two-stream engine, i.e., an engine without a third stream (e.g., fan stream **172** in the exemplary engine **100** of FIG. **2**). With such a configuration, a total sea level static thrust output Fn_{Total} of the engine **100** may generally be equal to a sum of: a fan stream thrust Fn_{Fan} (i.e., an amount of thrust generated by a fan **152** through a bypass passage **194**) and a turbomachine thrust Fn_{TM} (i.e., an amount of thrust generated by an airflow through a turbomachine exhaust nozzle **140**), each during the static, sea level, standard day conditions.

[0142] Further, for the exemplary embodiment of FIG. **8**, the engine **100** additionally includes a cooled cooling air system **250** configured to provide a turbine section with cooled cooling air during operation of the engine **100**, to allow the engine **100** to accommodate higher temperatures to allow for a reduction in a high pressure compressor exit area, while maintaining or even increasing a maximum turbofan engine thrust output.

[0143] It will be appreciated that in other exemplary embodiments of the present disclosure, the cooled cooling air system **250** of the engine **100** may be configured in any other suitable manner. For example, the exemplary cooled cooling air system **250** described above with reference to FIGS. **2** and **3** is generally configured as a thermal bus cooled cooling air system. However, in other embodiments, the cooled cooling air system **250** may instead be a dedicated heat exchanger cooled cooling air system (i.e., a cooled cooling air system including a heat exchanger that transfers heat directly to a cooling medium). Additionally, in other embodiments, the cooled cooling air system **250** may be a bypass heat exchanger cooled cooling air system having a heat sink heat exchanger thermally coupled to an airflow through a bypass passage (see, e.g., FIG. **9**, discussed below). Additionally, or alternatively, in other embodiments, the cooled cooling air system **250** may be one of an air-to-air cooled cooling air system (a cooled cooling air system having a heat sink heat exchanger configured to transfer heat to an airflow; see, e.g., FIG. **9**, discussed below); an oil-to-air cooled cooling air system (a cooled cooling air system having a heat sink heat exchanger configured to transfer heat to an oil flow); or a fuel-to-air cooled cooling air system (a cooled cooling air system having a heat sink heat exchanger configured to transfer heat to a fuel flow, such as a Jet A fuel flow, a liquid hydrogen or hydrogen gas fuel flow, etc.; see, e.g., FIG. **4**).

[0144] More particularly, referring generally to FIGS. **9** through **11**, in other exemplary embodiments, the cooled cooling air system **250** of the engine **100** may be configured in any other suitable manner. The exemplary engines **100** depicted in FIGS. **9** through **11** may be configured in a similar manner as exemplary engine **100** described above with reference to FIGS. **1** through **4**, and the same or similar numbers may refer to the same or similar parts.

[0145] For example, each of the exemplary engines **100** depicted in FIGS. **9** through **11** generally includes a turbomachine **120** having an LP compressor **126**, an HP compressor **128**, a combustion section **130**, an HP turbine **132**, and an LP turbine **134** collectively defining at least in part a working gas flowpath **142** and arranged in serial flow order. The exemplary turbomachine **120** depicted addition-

ally includes a core cowl **122**, and the engine **100** includes a fan cowl **170**. The engine **100** includes or defines a fan duct **172** positioned partially between the core cowl **122** and the fan cowl **170**. Moreover, a bypass passage **194** is defined at least in part by the core cowl **122**, the fan cowl **170**, or both and extends over the turbomachine **120**.

[0146] Moreover, the exemplary engines **100** depicted in FIGS. **9** to **11** additionally include a cooled cooling air system **250**. The cooled cooling air system **250** generally includes a duct assembly **252** and a CCA heat exchanger **254**.

[0147] However, referring particular to FIG. **9**, it will be appreciated that for the exemplary embodiment depicted, the CCA heat exchanger **254** is positioned in thermal communication with the bypass passage **194**, and more specifically, it is exposed to an airflow through or over the bypass passage **194**. For the embodiment of FIG. **9**, the CCA heat exchanger **254** is positioned on the core cowl **122**. In such a manner, the CCA heat exchanger **254** may be an air-to-air CCA heat exchanger configured to exchange heat between an airflow extracted from the HP compressor **128** and the airflow through the bypass passage **194**.

[0148] As is depicted in phantom, the cooled cooling air system **250** may additionally or alternatively be positioned at any other suitable location along the bypass passage **194**, such as on the fan cowl **170**. Further, although depicted in FIG. **9** as being positioned on the core cowl **122**, in other embodiments, the CCA heat exchanger **254** may be embedded into the core cowl **122**, and airflow through the bypass passage **194** may be redirected from the bypass passage **194** to the CCA heat exchanger **254**.

[0149] As will be appreciated, a size of the CCA heat exchanger **254** may affect the amount of drag generated by the CCA heat exchanger **254** being positioned within or exposed to the bypass passage **194**. Accordingly, sizing the cooled cooling air system **250** in accordance with the present disclosure may allow for a desired reduction in a HP compressor **128** exit area, while maintaining or even increasing a total thrust output for the engine **100**, without creating an excess amount of drag on the engine **100** in the process.

[0150] Referring now particular to FIG. **10**, it will be appreciated that for the exemplary embodiment depicted, the cooled cooling air system **250** is configured to receive the cooling airflow from an air source upstream of a downstream half of the HP compressor **128**. In particular, for the exemplary embodiment of FIG. **10**, the exemplary cooled cooling air system **250** is configured to receive the cooling airflow from a location upstream of the HP compressor **128**, and more specifically, still, from the LP compressor **126**. In order to allow for a relatively low pressure cooling airflow to be provided to a first stage **214** of HP turbine rotor blades **206** of the HP turbine **132**, the cooled cooling air system **250** further includes a pump **299** in airflow communication with the duct assembly **252** to increase a pressure of the cooling airflow through the duct assembly **252**. For the exemplary aspect depicted, the pump **299** is positioned downstream of the CCA heat exchanger **254**. In such a manner, the pump **299** may be configured to increase the pressure of the cooling airflow through the duct assembly **252** after the cooling airflow has been reduced in temperature by the CCA heat exchanger **254**. Such may allow for a reduction in wear on the pump **299**.

[0151] Referring now particularly to FIG. **11**, it will be appreciated that the cooled cooling air system **250** includes a high-pressure portion and a low-pressure portion operable in parallel. In particular, the duct assembly **252** includes a high-pressure duct assembly **252**A and a low-pressure duct assembly **252**B, and the CCA heat exchanger **254** includes a high-pressure CCA heat exchanger **254**A and a low-pressure CCA heat exchanger **254**B.

[0152] The high-pressure duct assembly **252**A is in fluid communication with the HP compressor **128** at a downstream half of the high-pressure compressor and is further in fluid communication with a first stage **214** of HP turbine rotor blades **206**. The high-pressure duct assembly **252**A may be configured to receive a high-pressure cooling airflow from the HP compressor **128** through the high-pressure duct assembly **252**A and provide such high-pressure cooling airflow to the first stage **214** of HP turbine rotor blades **206**. The high-pressure CCA heat exchanger **254**A may be configured to reduce a temperature of the high-pressure cooling airflow through the high-pressure duct assembly **252**A at a location upstream of the first stage **214** of HP turbine rotor blades **206**.

[0153] The low-pressure duct assembly **252**B is in fluid communication with a location upstream of the downstream half of the high-pressure compressor **128** and is further in fluid communication with the HP turbine **132** and a location downstream of the first stage **214** of HP turbine rotor blades **206**. In particular, for the embodiment depicted, the low-pressure duct assembly **252**B is in fluid communication with the LP compressor **126** and a second stage (not labeled) of HP turbine rotor blades **206**. The low-pressure duct assembly **252**B may be configured to receive a low-pressure cooling airflow from the LP compressor **126** through the low-pressure duct assembly **252**B and provide such low-pressure cooling airflow to the second stage of HP turbine rotor blades **206**. The low-pressure CCA heat exchanger **254**B may be configured to reduce a temperature of the low-pressure cooling airflow through the low-pressure duct assembly **252**B upstream of the second stage of HP turbine rotor blades **206**.

[0154] Inclusion of the exemplary cooled cooling air system **250** of FIG. **11** may reduce an amount of resources utilized by the cooled cooling air system **250** to provide a desired amount of cooling for the turbomachine **120**.

[0155] Further, for the exemplary embodiment of FIG. **11**, it will be appreciated that the cooled cooling air system **250** may further be configured to provide cooling to one or more stages of LP turbine rotor blades **210**, and in particular to a first stage (i.e., upstream-most stage) of LP turbine rotor blades **210**. Such may further allow for, e.g., the higher operating temperatures described herein.

[0156] Reference will now be made briefly to FIG. **12**. FIG. **12** provides a schematic view of an engine **500** in accordance with another exemplary embodiment of the present disclosure. The exemplary embodiment of FIG. **12** may be configured in substantially the same manner as the exemplary engine **100** described above with respect to FIGS. **1** through **4**, and the same or similar reference numerals may refer to the same or similar parts. However, as will be appreciated, for the embodiment shown, the engine **500** is configured as a three-spool engine, instead of a two-spool engine.

[0157] For example, the exemplary engine **500** includes a fan section **502** and a turbomachine **504**. The fan section includes a fan **506**. The turbomachine includes a first compressor **508**, a second compressor **510**, a combustion section

512, a first turbine **514**, a second turbine **516**, and a third turbine **518**. The first compressor **508** may be a high pressure compressor, the second compressor **510** may be a medium pressure compressor (or intermediate pressure compressor), the first turbine **514** may be a high pressure turbine, the second turbine **516** may be a medium pressure turbine (or intermediate pressure turbine), and the third turbine **518** may be a low pressure turbine. Further, the engine **500** includes a first shaft **520** extending between, and rotatable with both of, the first compressor **508** and first turbine **514**; a second shaft **522** extending between, and rotatable with both of, the second compressor **510** and second turbine **516**; and a third shaft **524** extending between, and rotatable with both of, the third turbine **518** and fan **506**. In such a manner, it will be appreciated that the engine **500** may be referred to as a three-spool engine.

[0158] For the embodiment of FIG. **12**, the term maximum EGT refers to a maximum temperature of an airflow after the first stator downstream of the last stage of rotor blades of the intermediate speed turbine, e.g., at location **526** in FIG. **12** (assuming the intermediate speed turbine **516** includes a stage of stator vanes downstream of the last stage of rotor blades).

[0159] It will further be appreciated that the exemplary cooled cooling air systems **250** described hereinabove are provided by way of example only. In other exemplary embodiments, aspects of one or more of the exemplary cooled cooling air systems **250** depicted may be combined to generate still other exemplary embodiments. For example, in still other exemplary embodiments, the exemplary cooled cooling air system **250** of FIGS. **2** through **4** may not be utilized with a thermal transport bus (e.g., thermal transport bus **300**), and instead may directly utilize a CCA heat exchanger **254** positioned within the fan duct **172**. Similarly, in other example embodiment, the exemplary cooled cooling air systems **250** of FIGS. **9** through **11** may be utilized with a thermal transport bus (e.g., thermal transport bus **300** of FIGS. **2**, **4** or **5**) to reject heat for the CCA heat exchanger **254**. Additionally, although the exemplary cooled cooling air systems **250** depicted schematically in FIGS. **9** through **11** depict the duct assembly **252** as positioned outward of the working gas flow path **142** along the radial direction R, in other exemplary embodiments, the duct assemblies **252** may extend at least partially inward of the working gas flow path **142** along the radial direction R (see, e.g., FIG. **4**). In still other exemplary embodiments, the cooled cooling air system **250** may include duct assemblies **252** positioned outward of the working gas flow path **142** along the radial direction R and inward of the working gas flow path **142** along the radial direction R (e.g., in FIG. **11**, the high-pressure duct assembly **252**A may be positioned inwardly of the working gas flow path **142** along the radial direction R and the low-pressure duct assembly **252**B may be positioned outwardly of the working gas flow path **142** along the radial direction R).

[0160] Moreover, it will be appreciated that in still other exemplary aspects, the gas turbine engine may include additional or alternative technologies to allow the gas turbine engine to accommodate higher temperatures while maintaining or even increasing the maximum turbofan engine thrust output, as may be indicated by a reduction in the high pressure compressor exit area, without, e.g., prematurely wearing on various components within the turbomachine exposed to the working gas flowpath.

[0161] For example, in additional or alternative embodiments, a gas turbine engine may incorporate advanced materials capable of withstanding the relatively high temperatures at downstream stages of a high pressure compressor exit (e.g., at a last stage of high pressure compressor rotor blades), and downstream of the high pressure compressor (e.g., a first stage of an HP turbine, downstream stages of the HP turbine, an LP turbine, an exhaust section, etc.).

[0162] In particular, in at least certain exemplary embodiments, a gas turbine engine of the present disclosure may include an airfoil (e.g., rotor blade or stator vane) in one or more of the HP compressor, the first stage of the HP turbine, downstream stages of the HP turbine, the LP turbine, the exhaust section, or a combination thereof formed of a ceramic-matrix-composite or "CMC." As used herein, the term CMC refers to a class of materials that include a reinforcing material (e.g., reinforcing fibers) surrounded by a ceramic matrix phase. Generally, the reinforcing fibers provide structural integrity to the ceramic matrix. Some examples of matrix materials of CMCs can include, but are not limited to, non-oxide silicon-based materials (e.g., silicon carbide, silicon nitride, or mixtures thereof), oxide ceramics (e.g., silicon oxycarbides, silicon oxynitrides, aluminum oxide (Al2O3), silicon dioxide (SiO2), aluminosilicates, or mixtures thereof), or mixtures thereof. Optionally, ceramic particles (e.g., oxides of Si, Al, Zr, Y, and combinations thereof) and inorganic fillers (e.g., pyrophyllite, wollastonite, mica, talc, kyanite, and montmorillonite) may also be included within the CMC matrix.

[0163] Some examples of reinforcing fibers of CMCs can include, but are not limited to, non-oxide silicon-based materials (e.g., silicon carbide, silicon nitride, or mixtures thereof), non-oxide carbon-based materials (e.g., carbon), oxide ceramics (e.g., silicon oxycarbides, silicon oxynitrides, aluminum oxide (Al2O3), silicon dioxide (SiO2), aluminosilicates such as mullite, or mixtures thereof), or mixtures thereof.

[0164] Generally, particular CMCs may be referred to as their combination of type of fiber/type of matrix. For example, C/SiC for carbon-fiber-reinforced silicon carbide; SiC/SiC for silicon carbide-fiber-reinforced silicon carbide, SiC/SiN for silicon carbide fiber-reinforced silicon nitride; SiC/SiC-SiN for silicon carbide fiber-reinforced silicon carbide/silicon nitride matrix mixture, etc. In other examples, the CMCs may include a matrix and reinforcing fibers comprising oxide-based materials such as aluminum oxide (Al2O3), silicon dioxide (SiO2), aluminosilicates, and mixtures thereof. Aluminosilicates can include crystalline materials such as mullite (3Al2O3 2SiO2), as well as glassy aluminosilicates.

[0165] In certain embodiments, the reinforcing fibers may be bundled and/or coated prior to inclusion within the matrix. For example, bundles of the fibers may be formed as a reinforced tape, such as a unidirectional reinforced tape. A plurality of the tapes may be laid up together to form a preform component. The bundles of fibers may be impregnated with a slurry composition prior to forming the preform or after formation of the preform. The preform may then undergo thermal processing, such as a cure or burn-out to yield a high char residue in the preform, and subsequent chemical processing, such as melt-infiltration with silicon, to arrive at a component formed of a CMC material having a desired chemical composition.

[0166] Such materials, along with certain monolithic ceramics (i.e., ceramic materials without a reinforcing material), are particularly suitable for higher temperature applications. Additionally, these ceramic materials are lightweight compared to superalloys, yet can still provide strength and durability to the component made therefrom. Therefore, such materials are currently being considered for many gas turbine components used in higher temperature sections of gas turbine engines, such as airfoils (e.g., turbines, and vanes), combustors, shrouds and other like components, that would benefit from the lighter-weight and higher temperature capability these materials can offer.

[0167] One or more of these components formed of a CMC material may include an environmental-barrier-coating or "EBC." The term EBC refers to a coating system including one or more layers of ceramic materials, each of which provides specific or multi-functional protections to the underlying CMC. EBCs generally include a plurality of layers, such as rare earth silicate coatings (e.g., rare earth disilicates such as slurry or APS-deposited yttrium ytterbium disilicate (YbYDS)), alkaline earth aluminosilicates (e.g., including barium-strontium-aluminum silicate (BSAS), such as having a range of BaO, SrO, Al_2O_3, and/or SiO_2 compositions), hermetic layers (e.g., a rare earth disilicate), and/or outer coatings (e.g., comprising a rare earth monosilicate, such as slurry or APS-deposited yttrium monosilicate (YMS)). One or more layers may be doped as desired, and the EBC may also be coated with an abradable coating.

[0168] In such a manner, it will be appreciated that the EBCs may generally be suitable for application to "components" found in the relatively high temperature environments noted above. Examples of such components can include, for example, combustor components, turbine blades, shrouds, nozzles, heat shields, and vanes.

[0169] Additionally, or alternatively still, in other exemplary embodiments, a gas turbine engine of the present disclosure may include an airfoil (e.g., rotor blade or stator vane) in one or more of an HP compressor, a first stage of an HP turbine, downstream stages of the HP turbine, an LP turbine, an exhaust section, or a combination thereof formed in part, in whole, or in some combination of materials including but not limited to titanium, nickel, and/or cobalt based superalloys (e.g., those available under the name Inconel® available from Special Metals Corporation). One or more of these materials are examples of materials suitable for use in an additive manufacturing processes.

[0170] Further, it will be appreciated that in at least certain exemplary embodiments of the present disclosure, a method of operating a gas turbine engine is provided. The method may be utilized with one or more of the exemplary gas turbine engines discussed herein, such as in FIGS. **1** through **4** and **8** through **11**. The method includes operating the gas turbine engine at a takeoff power level, the gas turbine engine having a turbomachine with a high pressure compressor defining a high pressure compressor exit area ($A_{HPCExit}$) in square inches. The gas turbine engine further defines a maximum exhaust gas temperature (EGT) in degrees Celsius, a total sea level static thrust output (Fn_{Total}) in pounds, and a corrected specific thrust. The corrected specific thrust is greater than or equal to 42 and less than or equal to 90, the corrected specific thrust determined as follows: $Fn_{Total} \times EGT/(A_{HPCExit}^2 \times 1000)$.

[0171] In certain exemplary aspects, operating the gas turbine engine at the takeoff power level further includes reducing a temperature of a cooling airflow provided to a high pressure turbine of the gas turbine engine with a cooled cooling air system. For example, in certain exemplary aspects, reducing the temperature of the cooling airflow provided to the high pressure turbine of the gas turbine engine with the cooled cooling air system comprises providing a temperature reduction of the cooling airflow equal to at least 15% of the EGT and up to 45% of the EGT.

[0172] As will be appreciated from the description herein, various embodiments of a gas turbine engine are provided. Certain of these embodiments may be an unducted, single rotor gas turbine engine (see FIG. **1**), a turboprop engine, or a ducted turbofan engine (see FIG. **8**). Another example of a ducted turbofan engine can be found in U.S. patent application Ser. No. 16/811,368 (Published as U.S. Patent Application Publication No. 2021/0108597), filed Mar. 6, 2020 (FIG. **10**, Paragraph

[0173] , et al.; including an annular fan case **13** surrounding the airfoil blades **21** of rotating element **20** and surrounding vanes **31** of stationary element **30**; and including a third stream/fan duct **73** (shown in FIG. **10**, described extensively throughout the application)). Various additional aspects of one or more of these embodiments are discussed below. These exemplary aspects may be combined with one or more of the exemplary gas turbine engine(s) discussed above with respect to the FIGS.

[0174] For example, in some embodiments of the present disclosure, the engine may include a heat exchanger located in an annular duct, such as in a third stream. The heat exchanger may extend substantially continuously in a circumferential direction of the gas turbine engine (e.g., at least 300 degrees, such as at leaseast 330 degrees).

[0175] In one or more of these embodiments, a threshold power or disk loading for a fan (e.g., an unducted single rotor or primary forward fan) may range from 25 horsepower per square foot (hp/ft^2) or greater at cruise altitude during a cruise operating mode. In particular embodiments of the engine, structures and methods provided herein generate power loading between 80 hp/ft^2 and 160 hp/ft^2 or higher at cruise altitude during a cruise operating mode, depending on whether the engine is an open rotor or ducted engine.

[0176] In various embodiments, an engine of the present disclosure is applied to a vehicle with a cruise altitude up to approximately 65,000 ft. In certain embodiments, cruise altitude is between approximately 28,000 ft and approximately 45,000 ft. In still certain embodiments, cruise altitude is expressed in flight levels based on a standard air pressure at sea level, in which a cruise flight condition is between FL280 and FL650. In another embodiment, cruise flight condition is between FL280 and FL450. In still certain embodiments, cruise altitude is defined based at least on a barometric pressure, in which cruise altitude is between approximately 4.85 psia and approximately 0.82 psia based on a sea level pressure of approximately 14.70 psia and sea level temperature at approximately 59 degrees Fahrenheit. In another embodiment, cruise altitude is between approximately 4.85 psia and approximately 2.14 psia. It should be appreciated that in certain embodiments, the ranges of cruise altitude defined by pressure may be adjusted based on a different reference sea level pressure and/or sea level temperature.

[0177] In various exemplary embodiments, the fan (or rotor) may include twelve (12) fan blades. From a loading

standpoint, such a blade count may allow a span of each blade to be reduced such that the overall diameter of the primary fan may also be reduced (e.g., to twelve feet in one exemplary embodiment). That said, in other embodiments, the fan may have any suitable blade count and any suitable diameter. In certain suitable embodiments, the fan includes at least eight (8) blades. In another suitable embodiment, the fan may have at least twelve (12) blades. In yet another suitable embodiment, the fan may have at least fifteen (15) blades. In yet another suitable embodiment, the fan may have at least eighteen (18) blades. In one or more of these embodiments, the fan includes twenty-six (26) or fewer blades, such as twenty (20) or fewer blades. Alternatively, in certain suitable embodiments, the fan may only include at least four (4) blades, such as with a fan of a turboprop engine.

[0178] Further, in certain exemplary embodiments, the rotor assembly may define a rotor diameter (or fan diameter) of at least 10 feet, such as at least 11 feet, such as at least 12 feet, such as at least 13 feet, such as at least 15 feet, such as at least 17 feet, such as up to 28 feet, such as up to 26 feet, such as up to 24 feet, such as up to 18 feet.

[0179] In various embodiments, it will be appreciated that the engine includes a ratio of a quantity of vanes to a quantity of blades that could be less than, equal to, or greater than 1:1. For example, in particular embodiments, the engine includes twelve (12) fan blades and ten (10) vanes. In other embodiments, the vane assembly includes a greater quantity of vanes to fan blades. For example, in particular embodiments, the engine includes ten (10) fan blades and twenty-three (23) vanes. For example, in certain embodiments, the engine may include a ratio of a quantity of vanes to a quantity of blades between 1:2 and 5:2. The ratio may be tuned based on a variety of factors including a size of the vanes to ensure a desired amount of swirl is removed for an airflow from the primary fan.

[0180] Additionally, in certain exemplary embodiments, where the engine includes the third stream and a mid-fan (a ducted fan aft of the primary, forward fan), a ratio R1/R2 may be between 1 and 10, or 2 and 7, or at least 3.3, at least 3.5, at least 4 and less than or equal to 7, where R1 is the radius of the primary fan and R2 is the radius of the mid-fan.

[0181] It should be appreciated that various embodiments of the engine, such as the single unducted rotor engine depicted and described herein, may allow for normal subsonic aircraft cruise altitude operation at or above Mach 0.5. In certain embodiments, the engine allows for normal aircraft operation between Mach 0.55 and Mach 0.85 at cruise altitude. In still particular embodiments, the engine allows for normal aircraft operation between Mach 0.75 and Mach 0.85. In certain embodiments, the engine allows for rotor blade tip speeds at or less than 750 feet per second (fps). In other embodiments, the rotor blade tip speed at a cruise flight condition can be 650 to 900 fps, or 700 to 800 fps. Alternatively, in certain suitable embodiments, the engine allows for normal aircraft operation of at least Mach 0.3, such as with turboprop engines.

[0182] A fan pressure ratio (FPR) for the primary fan of the fan assembly can be 1.04 to 2.20, or in some embodiments 1.05 to 1.2, or in some embodiments less than 1.08, as measured across the fan blades of the primary fan at a cruise flight condition.

[0183] In order for the gas turbine engine to operate with a fan having the above characteristics to define the above FPR, a gear assembly may be provided to reduce a rotational speed of the fan assembly relative to a driving shaft (such as a low pressure shaft coupled to a low pressure turbine). In some embodiments, a gear ratio of the input rotational speed to the output rotational speed is between 3.0 and 4.0, between 3.2 and 3.5, or between 3.5 and 4.5. In some embodiments, a gear ratio of the input rotational speed to the output rotational speed is greater than 4.1. For example, in particular embodiments, the gear ratio is within a range of 4.1 to 14.0, within a range of 4.5 to 14.0, or within a range of 6.0 to 14.0. In certain embodiments, the gear ratio is within a range of 3.2 to 12 or within a range of 4.5 to 11.0.

[0184] With respect to a turbomachine of the gas turbine engine, the compressors and/or turbines can include various stage counts. As disclosed herein, the stage count includes the number of rotors or blade stages in a particular component (e.g., a compressor or turbine). For example, in some embodiments, a low pressure compressor may include 1 to 8 stages, a high-pressure compressor may include 4 to 15 stages, a high-pressure turbine may include 1 to 2 stages, and/or a low pressure turbine (LPT) may include 1 to 7 stages. In particular, the LPT may have 4 stages, or between 4 and 6 stages. For example, in certain embodiments, an engine may include a one stage low pressure compressor, an 11 stage high pressure compressor, a two stage high pressure turbine, and 4 stages, or between 4 and 7 stages for the LPT. As another example, an engine can include a three stage low-pressure compressor, a 10 stage high pressure compressor, a two stage high pressure turbine, and a 7 stage low pressure turbine.

[0185] A core engine is generally encased in an outer casing defining one half of a core diameter (Dcore), which may be thought of as the maximum extent from a centerline axis (datum for R). In certain embodiments, the engine includes a length (L) from a longitudinally (or axial) forward end to a longitudinally aft end. In various embodiments, the engine defines a ratio of L/Dcore that provides for reduced installed drag. In one embodiment, L/Dcore is at least 2. In another embodiment, L/Dcore is at least 2.5. In some embodiments, the L/Dcore is less than 5, less than 4, and less than 3. In various embodiments, it should be appreciated that the L/Dcore is for a single unducted rotor engine.

[0186] The reduced installed drag may further provide for improved efficiency, such as improved specific fuel consumption. Additionally, or alternatively, the reduced installed drag may provide for cruise altitude engine and aircraft operation at the above describe Mach numbers at cruise altitude. Still particular embodiments may provide such benefits with reduced interaction noise between the blade assembly and the vane assembly and/or decreased overall noise generated by the engine by virtue of structures located in an annular duct of the engine.

[0187] Additionally, it should be appreciated that ranges of power loading and/or rotor blade tip speed may correspond to certain structures, core sizes, thrust outputs, etc., or other structures of the core engine. However, as previously stated, to the extent one or more structures provided herein may be known in the art, it should be appreciated that the present disclosure may include combinations of structures not previously known to combine, at least for reasons based in part on conflicting benefits versus losses, desired modes of operation, or other forms of teaching away in the art.

[0188] Although depicted above as an unshrouded or open rotor engine, it should be appreciated that aspects of the

disclosure provided herein may be applied to shrouded or ducted engines, partially ducted engines, aft-fan engines, or other gas turbine engine configurations, including those for marine, industrial, or aero-propulsion systems. Certain aspects of the disclosure may be applicable to turbofan, turboprop, or turboshaft engines. However, it should be appreciated that certain aspects of the disclosure may address issues that may be particular to unshrouded or open rotor engines, such as, but not limited to, issues related to gear ratios, fan diameter, fan speed, length (L) of the engine, maximum diameter of the core engine (Dcore) of the engine, L/Dcore of the engine, desired cruise altitude, and/or desired operating cruise speed, or combinations thereof.

[0189] The discussion above is primarily directed to gas turbine engines configured as a turbofan engine or open rotor engine. After additional research and testing, it was discovered that the concepts outlined above can similarly apply to produce improvements in gas turbine engines configured to function as a turboprop or turboshaft engine.

[0190] Turboshaft and turboprop engines generally include a turbomachine, the turbomachine including a compressor section, a combustion section, a turbine section, and defining a working gas flowpath therethrough. The power generated by the turbomachine is transmitted to a load, e.g., a propeller in the case of a turboprop engine, through an output shaft. In such a manner, for turboprop engines, output shaft causes the propeller rotor blades to rotate and generate a thrust output. A turboshaft engine is configured in a similar manner, but without the propeller assembly. With a turboshaft engine, the load driven by the output shaft may be a number of different aeronautical vehicle loads, including a vertical thrust propeller (driven through one or more gears), an electric machine, etc. Efficiency and power density of the gas turbine engine (or simply "engine") are important factors in the performance of an aeronautical vehicle incorporating the engine.

[0191] Conventional turboprop and turboshaft engine design has been constrained by the thermal efficiency limits imposed by the temperatures and pressures at an exit of a high pressure compressor (HPC) of the compressor section and as well as an exhaust gas temperature (EGT). For example, for a desired engine power output produced from an increased pressure ratio across the HPC, there is an increase in the gas temperature at the exit of the HPC, at a combustor inlet, at the turbine section inlet, through the turbine section, and through an exhaust section of the engine. These constraints have historically dictated a size of a core (the core being, e.g., the HPC, combustor, and a high pressure turbine) of the turbomachine of the engine and, consequently, an overall power output and efficiency of the engine.

[0192] The inventors found that there are approaches to making an engine capable of operating at higher temperatures while providing a net benefit to engine performance: intercooling a compressor section of a turbomachine of the engine, reducing the temperature of a gas used to cool core components, utilizing advanced materials capable of withstanding higher operating temperature conditions, or combinations thereof. As thermal efficiency increases, the size of the core can be reduced for a given power output, resulting in a turbomachine that is physically smaller for a given power output. This improved power density is of significant value. The inventors discovered that improvements in power density may be achieved without having to pay unacceptable costs in other aspects of the engine design, such as complexity, reliability, diminished engine cycles requiring part replacement or integration with airframes having different requirements for engine size, shape and power transfers.

[0193] In the context of a turboprop or turboshaft engine that utilizes these advanced technologies, the inventors discovered, unexpectedly and contrary to conventional expectations, that the benefits of operating at higher temperatures and pressures, while maintaining or reducing the core size, can indeed outweigh the associated costs of incorporation these advanced technologies. This discovery was made during the course of designing various engine architectures with different power classes and mission requirements. In particular, the inventors discovered a significant relationship between engine power output, core size, and the conditions exiting the HPC and through the turbine section, whereby including the noted technologies produces a net benefit. Previously it was thought that the cost for including one or more of these advanced technologies was too prohibitive, as compared to the benefits of increasing the temperatures through the core (e.g., EGT).

[0194] For example, the inventors of the present disclosure found that a cooled cooling air system may be included while maintaining or even increasing the maximum engine power output, based on this discovery. The cooled cooling air system may receive an airflow from, e.g., the compressor section, reduce a temperature of the airflow using a heat exchanger, and provide the cooled airflow to one or more components of the turbine section, such as a first stage of high pressure turbine rotor blades. In such a manner, the first stage of high pressure turbine rotor blades may be capable of withstanding increased temperatures by using the cooled cooling air, providing a net benefit to the engine, i.e., providing an increase in thermal efficiency of the engine, taking into consideration the costs associated with accommodations made for the system used to cool the cooling air.

[0195] The inventors reached this conclusion after evaluating potentially negative impacts to engine performance brought on by introduction of a cooled cooling air system. For example, a cooled cooling air system may generally include a duct extending through a diffusion cavity between a compressor exit and a combustor within the combustion section, such that increasing the cooling capacity may concomitantly increase a size of the duct and thus increase a drag or blockage of an airflow through the diffusion cavity, potentially creating problems related to, e.g., combustor aerodynamics. Similarly, a dedicated or shared heat exchanger of the cooled cooling air system may be positioned external to the turbomachine (e.g., downstream of a propeller in a propeller stream), which may create an aerodynamic drag or may increase a size of the shared heat exchanger and increase aerodynamic drag. Size and weight increases associated with maintaining certain risk tolerances were also taken into consideration. For example, a cooled cooling air system must be accompanied with adequate safeguards in the event of a burst pipe condition, which safeguards result in further increases in the overall size, complexity, and weight of the system.

[0196] Similarly, the inventors of the present disclosure found that an intercooler assembly could additionally or alternatively be included for engines within the bounds disclosed herein while maintaining or even increasing the maximum engine power output, based on this discovery. The intercooler assembly can enable higher overall pressure

ratios by reducing a temperature of a gas flow through one or more stages of the compressor section, such that for a given overall pressure ratio, the gas temperature at the exit of the HPC is reduced. The inventors reached this conclusion after similarly evaluating potentially negative impacts to engine performance brought on by introduction of an intercooler assembly. For example, in order to provide increases in temperature reduction of an airflow through the compressor section an intercooler assembly may generally require a corresponding increases in pressure drop across a heat exchanger of the intercooler assembly. Therefore, in order to achieve a higher temperature reductions by the intercooler assembly, the intercooler assembly traditionally causes a reduction in efficiency and overall compressor pressure ratio.

[0197] With a goal of arriving at an improved turboprop or turboshaft engine capable of operating at higher temperatures, e.g., through the turbine section, the inventors have proceeded in the manner of designing turboprop and turboshaft engines having an overall pressure ratio (and associated HPC exit area), a maximum output power, maximum exhaust gas temperature, and the supporting technology characteristics; checking the propulsive/thermal efficiency and qualitative engine characteristics of the designed engine; redesigning the engine to have higher or lower compression ratios (and associated HPC exit areas) based on the impact on other aspects of the architecture, total power output, maximum exhaust gas temperature, and supporting technology characteristics; rechecking the propulsive/thermal efficiency and qualitative engine characteristics of the redesigned engine; etc. during the design of several different types of turboprop or turboshaft engines, including the turboprop and turboshaft engines described below with reference to FIGS. **13** through **17**, FIGS. **20** through **34**, and the embodiments listed in the Table of FIG. **18**.

[0198] Referring now to the drawings, wherein identical numerals indicate the same elements throughout the figures, FIG. **13** is a schematic cross-sectional view of a gas turbine engine in accordance with an exemplary embodiment of the present disclosure. More particularly, for the embodiment of FIG. **13**, the gas turbine engine is a turboprop engine **610**. As shown in FIG. **13**, turboprop engine **610** defines an axial direction A (extending parallel to a longitudinal centerline or central axis **612** provided for reference), a radial direction R, and a circumferential direction C (not shown) disposed about the axial direction A. Turboprop engine **610** generally includes a propeller section **614** and a turbomachine **616** disposed aft of the propeller section **614** from an aircraft perspective, the propeller section **614** being operable with, and driven by, turbomachine **616**.

[0199] The turbomachine **616** includes, in a serial flow relationship, a booster compressor **618**, a high pressure (HP) compressor **622**, a combustion section **626**, a high pressure (HP) turbine **628**, an intermediate pressure (IP) turbine **620**, a low pressure (LP) turbine **630**, and an exhaust section **632**. An air flow path generally extends through booster compressor **618**, HP compressor **622**, combustion section **626**, HP turbine **628**, IP turbine **620**, LP turbine **630**, and exhaust section **632** which are in fluid communication with each other.

[0200] It should be appreciated that although the compressor immediately upstream of the combustion section **626** is referred to as a "high pressure" compressor (HP compressor **622**), such a nomenclature does not preclude embodiments where the compressor immediately upstream of the combustion section **626** is the sole compressor (see, e.g., FIG. **31**).

[0201] In at least certain exemplary embodiments, the HP turbine **628** can include at least two stages of HP turbine rotor blades. Such a configuration may ensure a sufficient amount of power is provided to the HP compressor **622**.

[0202] An HP shaft or spool **634** drivingly connects the HP turbine **628** to the HP compressor **622**. An IP shaft **635** drivingly connects the IP turbine **620** to the booster compressor **618**. An LP shaft or spool **636** drivingly connects the LP turbine **630** to propeller section **614** of the turboprop engine **610**. The turbomachine **616** includes a drive turbine drivingly coupled to a drive turbine shaft configured to provide an output torque to, e.g., the fan assembly **614** in the embodiment shown. For the embodiment depicted, the drive turbine is the LP turbine **630** and the drive turbine shaft is the LP shaft **636**.

[0203] For the embodiment depicted, propeller section **614** includes a variable pitch propeller **638** having a plurality of propeller blades **640** coupled to a disk **642** in a spaced apart manner. As depicted, the propeller blades **640** extend outwardly from disk **642** generally along the radial direction R. Each propeller blade **640** is rotatable relative to the disk **642** about a pitch axis P by virtue of the propeller blades **640** being operatively coupled to a suitable actuation member **644** configured to collectively vary the pitch of the propeller blades **640**, e.g., in unison. The propeller blades **640**, disk **642**, and actuation member **644** are together rotatable about a fan centerline **645** by LP shaft **636** across a power gear box **646**. The power gear box **646** includes a plurality of gears for stepping down the rotational speed of the LP shaft **636** to a more efficient rotational fan speed and is attached to one or both of a core frame or a fan frame through one or more coupling systems. Additionally, for the embodiment shown, the power gear box **646** is an offset gear box, such that the fan axis **645** is offset from the longitudinal centerline **612** of the turbomachine **616**.

[0204] During operation of the turboprop engine **610**, a volume of air **650** (also referred to as a free stream flow of air prior to its encounter with the propeller **638**) passes through blades **640** of propeller **638** and is urged toward an inlet **652** of turbomachine **616**. More specifically, turboprop engine **610** includes an intake channel **654** that extends from the inlet **652**, which is non-axisymmetric with respect to longitudinal centerline **612**, to the booster compressor **618**, where the channel **654** is axisymmetric with respect to longitudinal centerline **612**.

[0205] The booster compressor **618** and HP compressor **622** each include one or more sequential stages of compressor stator vanes, one or more sequential stages of compressor rotor blades, an impeller, or combinations thereof. In particular, the booster compressor **618** is depicted as an axial compressor (having multiple stages of compressor stator vanes and rotor blades) and the HP compressor **622** is depicted as a centrifugal compressor (having an impeller).

[0206] Though the illustrated embodiment includes both axial and centrifugal flow compressors, in some forms the turboprop engine **610** can include just an axial flow compressor(s) or centrifugal flow compressor(s).

[0207] The HP compressor **622** directs compressed air into combustion section **626** where the air mixes with fuel. Combustion section **626** includes a combustor which combusts the air/fuel mixture to provide combustion gases. The

combustion gases flow through HP turbine **628**, IP turbine **620**, and LP turbine **630**. Each of these HP, IP, and LP turbines **628**, **620**, **630** includes one or more sequential stages of turbine stator vanes and one or more sequential stages of turbine rotor blades. The turbine rotor blades are coupled to a respective one of the HP shaft **634**, IP shaft **635**, or LP shaft **636** to extract thermal and/or kinetic energy from the combustion gasses flowing therethrough. The energy extraction from HP turbine **628** supports operation of HP compressor **622** through HP shaft **634**, the energy extraction from IP turbine **620** supports operation of booster compressor **618** through IP shaft **635**, and the energy extraction from LP turbine **630** supports operation of propeller section **614** through LP shaft **636** (across the power gear box **646**). Combustion gases exit turboprop engine **610** through exhaust section **632**.

[0208] In other exemplary embodiments, the turbine engine may include any suitable number of compressors, turbines, shafts, etc. For example, as will be appreciated, HP shaft **634** and LP shaft **636** may further be coupled to any suitable device for any suitable purpose. For example, in certain exemplary embodiments, turboprop engine **610** of FIG. **13** may be utilized in aeroderivative applications. Additionally, in other exemplary embodiments, turboprop engine **610** may include any other suitable type of combustor, such as a reverse flow combustor.

[0209] The embodiment of turboprop engine **610** illustrated in FIG. **13** further includes an intercooler assembly **700**. In particular, referring now to FIG. **14**, providing a close-up view of a portion of the turbomachine **616** of FIG. **13**, the intercooler assembly **700** includes an intercooler heat exchanger **702** in thermal communication with the compressor section of the turbomachine **616**. For the embodiment depicted, the intercooler heat exchanger **702** is positioned in thermal communication with the compressor section at a location downstream of the booster compressor **618** and upstream of the HP compressor **622**.

[0210] It will be appreciated, however, that in other exemplary embodiments, the intercooler heat exchanger **702** may additionally or alternatively be positioned in thermal communication with the compressor section at a location within the booster compressor **618** and/or within the HP compressor **622** (e.g., an inter-stage heat exchanger).

[0211] Referring still to the embodiment of FIG. **14**, it will be appreciated that the turbomachine **616** defines a working gas flowpath **704** extending from the inlet **652** (see FIG. **13**), through the compressor section, combustion section **626**, turbine section, and exhaust section **632** (see FIG. **13**). More specifically, for the embodiment depicted, the intercooler heat exchanger **702** is positioned within the working gas flowpath **704** through the compressor section at a location downstream of the booster compressor **618** and upstream of the HP compressor **622**.

[0212] The intercooler assembly **700** is configured to cool the airflow through the compressor section, allowing the compressor section to define a higher overall pressure ratio without a compressor exit temperature (and downstream temperatures such as turbine inlet temperature and exhaust gas temperature) exceeding operability thresholds. The intercooler heat exchanger **702** is accordingly in fluid communication with a cooling fluid source through an inlet line **706** and an outlet line **708**. The inlet line **706** may provide a cooling fluid to the intercooler heat exchanger **702**, whereby the cooling fluid may accept heat from the airflow through the working gas flowpath **704** between the booster compressor **618** and HP compressor **622**. The outlet line **708** may provide the heated cooling fluid away from the intercooler heat exchanger **702**.

[0213] The cooling fluid source may be a thermal transport bus (see thermal transport bus **800** of FIG. **15**, below) utilizing a supercritical thermal fluid (such as supercritical CO_2, supercritical N_2, or a commercial refrigerant/transfer fluid).

[0214] Additionally, or alternatively, the cooling fluid source may be any other suitable cooling fluid source, such as a cooled cooling air, a pressurized bypass or freestream airflow, a fuel flow, or the like.

[0215] For example, in at least certain exemplary embodiments, the cooling fluid source may be a fuel flow. For example, the turboprop engine **610** may include a fuel system that is a cryogenic fuel system, such as a cryogenic hydrogen fuel (i.e., configured to store a liquid hydrogen). With such an exemplary embodiment, the intercooler heat exchanger **702** may be in thermal communication with a liquid hydrogen, creating a large temperature differential between the cooling fluid (liquid hydrogen) and the airflow through the compressor section to be cooled. Such may allow for a relatively compact intercooler heat exchanger **702** with a relatively low pressure drop for a given amount of desired temperature reduction of the airflow through the compressor section. At the same time, the heat extracted from the airflow through the compressor section may be used to help vaporize the liquid hydrogen prior to combustion.

[0216] In particular, in certain exemplary embodiments, the cooling fluid source for the intercooler heat exchanger **702** can be a thermal transport bus having a conduit with a flow of thermal transport fluid therethrough. More specifically, referring now briefly to FIG. **15**, a schematic view of a thermal transport bus **800** as may be utilized with the turboprop engine **610** described above with reference to FIGS. **13** and **14** is provided.

[0217] The thermal transport bus **800** includes an intermediary heat exchange fluid flowing therethrough and is formed of one or more suitable fluid conduits **804**. The heat exchange fluid may be an incompressible fluid having a high temperature operating range.

[0218] Additionally, or alternatively, the heat exchange fluid may be a single phase fluid, or alternatively, may be a phase change fluid. In certain exemplary embodiments, the heat exchange fluid may be a supercritical fluid, such as a supercritical N_2, or a supercritical CO_2. Utilizing a supercritical fluid may allow for an intercooler assembly **700** to include an intercooler heat exchanger **702** that has a relatively low pressure drop for a given amount of heat transfer, allowing in a more efficient compressor section while still achieving a desirably low compressor exit temperature.

[0219] The exemplary thermal transport bus **800** includes a pump **806** in fluid communication with the heat exchange fluid in the thermal transport bus **800** for generating a flow of the heat exchange fluid in/through the thermal transport bus **800**.

[0220] Moreover, the exemplary thermal transport bus **800** includes one or more heat source exchangers **808** in thermal communication with the heat exchange fluid in the thermal transport bus **800**. Specifically, the thermal transport bus **800** depicted includes a plurality of heat source exchangers **808**. The plurality of heat source exchangers **808** are configured

to transfer heat from, e.g., one or more of accessory systems of the turboprop engine **610** to the heat exchange fluid in the thermal transport bus **800**. For example, in certain exemplary embodiments, the plurality of heat source exchangers **808** may include one or more of: an intercooler heat exchanger (such as the exemplary intercooler heat exchanger **702** of FIG. **14**); a main lubrication system heat source exchanger for transferring heat from a main lubrication system; an advanced clearance control (ACC) system heat source exchanger for transferring heat from an ACC system; a generator lubrication system heat source exchanger for transferring heat from the generator lubrication system; an environmental control system (ECS) heat exchanger for transferring heat from an ECS; an electronics cooling system heat exchanger for transferring heat from the electronics cooling system; a vapor compression system heat source exchanger; an air cycle system heat source exchanger; and an auxiliary system(s) heat source exchanger.

[0221] For the embodiment depicted, there are three heat source exchangers **808**. The heat source exchangers **808** are each arranged in series flow along the thermal transport bus **800**. However, in other exemplary embodiments, any other suitable number of heat source exchangers **808** may be included and one or more of the heat source exchangers **808** may be arranged in parallel flow along the thermal transport bus **800** (in addition to, or in the alternative to the serial flow arrangement depicted). For example, in other embodiments there may be a single heat source exchanger **808** in thermal communication with the heat exchange fluid in the thermal transport bus **800**, or alternatively, there may be at least two heat source exchangers **808**, at least four heat source exchangers **808**, at least five heat source exchangers **808**, or at least six heat source exchangers **808**, and up to twenty heat source exchangers **808** in thermal communication with heat exchange fluid in the thermal transport bus **800**.

[0222] Additionally, the exemplary thermal transport bus **800** of FIG. **17** further includes one or more heat sink exchangers **810** permanently or selectively in thermal communication with the heat exchange fluid in the thermal transport bus **800**. The one or more heat sink exchangers **810** are located downstream of the plurality of heat source exchangers **808** and are configured for transferring heat from the heat exchange fluid in the thermal transport bus **800**, e.g., to atmosphere, to fuel, to a fan stream, etc. For example, in certain embodiments the one or more heat sink exchangers **810** may include at least one of a RAM heat sink exchanger, a fuel heat sink exchanger, a bypass passage heat sink exchanger, a bleed air heat sink exchanger, or a cold air output heat sink exchanger of an air cycle system. The fuel heat sink exchanger is a "fluid to heat exchange fluid" heat exchanger wherein heat from the heat exchange fluid is transferred to a stream of liquid fuel. As noted above, the fuel may be a cryogenic fuel, such as a liquid hydrogen fuel.

[0223] Moreover, the other heat sink exchanger may generally be an "air to heat exchange fluid" heat exchanger which transfers heat from the heat exchange fluid to an airflow.

[0224] For the embodiment of FIG. **15**, the one or more heat sink exchangers **810** of the thermal transport bus **800** depicted includes a plurality of individual heat sink exchangers **810**. More particularly, for the embodiment of FIG. **15**, the one or more heat sink exchangers **810** include three heat sink exchangers **810** arranged in series. The three heat sink exchangers **810** are configured as a bypass passage heat sink exchanger, a fuel heat sink exchanger, and a fan stream heat sink exchanger.

[0225] However, in other exemplary embodiments, the one or more heat sink exchangers **810** may include any other suitable number and/or type of heat sink exchangers **810**. For example, in other exemplary embodiments, a single heat sink exchanger **810** may be provided, at least two heat sink exchangers **810** may be provided, at least four heat sink exchangers **810** may be provided, at least five heat sink exchangers **810** may be provided, or up to twenty heat sink exchangers **810** may be provided. Additionally, in still other exemplary embodiments, two or more of the one or more heat sink exchangers **810** may alternatively be arranged in parallel flow with one another.

[0226] Referring still to the exemplary embodiment depicted in FIG. **15**, one or more of the plurality of heat sink exchangers **810** and one or more of the plurality of heat source exchangers **808** are selectively in thermal communication with the heat exchange fluid in the thermal transport bus **800**. More particularly, the thermal transport bus **800** depicted includes a plurality of bypass lines **812** for selectively bypassing each heat source exchanger **808** and each heat sink exchanger **810** in the plurality of heat sink exchangers **810**. Each bypass line **812** extends between an upstream juncture **814** and a downstream juncture **816**-the upstream juncture **814** located just upstream of a respective heat source exchanger **808** or heat sink exchanger **810**, and the downstream juncture **816** located just downstream of the respective heat source exchanger **808** or heat sink exchanger **810**.

[0227] Additionally, each bypass line **812** meets at the respective upstream juncture **814** with the thermal transport bus **800** via a three-way valve **818**. The three-way valves **818** each include an inlet fluidly connected with the thermal transport bus **800**, a first outlet fluidly connected with the thermal transport bus **800**, and a second outlet fluidly connected with the bypass line **812**. The three-way valves **818** may each be a variable throughput three-way valve, such that the three-way valves **818** may vary a throughput from the inlet to the first and/or second outlets. For example, the three-way valves **818** may be configured for providing anywhere between zero percent (0%) and one hundred percent (100%) of the heat exchange fluid from the inlet to the first outlet, and similarly, the three-way valves **818** may be configured for providing anywhere between zero percent (0%) and one hundred percent (100%) of the heat exchange fluid from the inlet to the second outlet.

[0228] Notably, the three-way valves **818** may be in operable communication with a controller of an engine including the thermal transport bus **800** (e.g., turboprop engine **610** of FIGS. **13** and **14**).

[0229] Further, each bypass line **812** also meets at the respective downstream juncture **816** with the thermal transport bus **800**. Between each heat source exchanger **808** or heat sink exchanger **810** and downstream juncture **816**, the thermal transport bus **800** includes a check valve **820** for ensuring a proper flow direction of the heat exchange fluid. More particularly, the check valve **820** prevents a flow of heat exchange fluid from the downstream juncture **816** towards the respective heat source exchanger **808** or heat sink exchanger **810**.

[0230] Referring now to FIG. **16**, a close-up view of an aft-most compression stage of the exemplary HP compressor **622** of FIGS. **13** and **14** is provided.

[0231] As will be appreciated, the HP compressor **622** is a centrifugal compressor, such that the aft-most compression stage is an impeller **902**. The impeller **902** includes a leading edge **904** and a trailing edge **906** and a base **908** to which the impeller **902** is coupled. The base **908** may be coupled to the HP shaft **634** to drive rotation of the impeller **902**.

[0232] The impeller **902** extends into the working gas flowpath **704**. At the trailing edge **906** of the impeller **902**, the working gas flowpath **704** is defined between the base **908** and a liner **910**.

[0233] The turboprop engine **610** further defines a reference plane **912** intersecting with an aft-most point of the trailing edge **906** of the impeller **902** depicted, the reference plane **230** being orthogonal to an airflow direction **914** out of the HP compressor **622**. In the embodiment depicted, the airflow direction **914** is along the radial direction R.

[0234] Further, the HP compressor **622** defines a high pressure compressor exit area ($A_{HPCExit}$) within the reference plane **912**. More specifically, the HP compressor **622** defines a flowpath height (H_F) in a direction orthogonal to the airflow direction **914**, and more specifically within the reference plane **912** and parallel to the axial direction A for the embodiment shown. The flowpath height (H_F) is defined between the liner **910** and the base **908** at the downstream-most portion of the trailing edge **906**. Notably, the downstream-most portion of the trailing edge **906** further defines a radius RTE. The HP compressor **622** exit area is defined for the embodiment depicted according to Expression (3):

$$A_{HPCExit} = 2\pi R_{TE} \times H_F. \qquad \text{Expression (3)}$$

[0235] Briefly, it will be appreciated that in certain exemplary embodiments, the HP compressor **622** may be configured as an axial compressor, such that a compressor rotor blade is positioned at an exit of the HP compressor **622**. In such an embodiment the high pressure compressor exit area ($A_{HPCExit}$) may be defined according to an equation similar to Expression (4), below.

[0236] The inventors of the present disclosure have found that for a given total output power of the turboprop engine **610**, a decrease in size of the high pressure compressor exit area ($A_{HPCExit}$) may generally relate in an increase in a compressor exit temperature (i.e., a temperature of the airflow through the working gas flowpath **704** at the reference plane **912**), a turbine inlet temperature (i.e., a temperature of the airflow through the working gas flowpath **704** provided to a first stage of rotor blades of the HP turbine **628**; see FIG. **13**), and the maximum exhaust gas temperature (EGT). In particular, the inventors of the present disclosure have found that the high pressure compressor exit area ($A_{HPCExit}$) may generally be used as an indicator of the above temperatures to be achieved by the engine **700** during operation for a given power output of the engine **700**.

[0237] As will further be appreciated, a total, or rather a maximum, power output of the turboprop engine **610** can generally be determined as a function of a maximum drive turbine shaft torque (T_{OUT}) in Newton meters (N-m) and a maximum rotational speed of the LP turbine **630**, in revolutions per minute (rpm). The maximum rotational speed of the LP turbine **630** is limited by a drive turbine exit area (A_{DTExit}) in square inches, as the higher drive turbine exit areas (A_{DTExit}) push the bounds of the strength to weight properties forming the LP turbine **630** (measured as a function of area (A) times speed (N) squared; AN^2).

[0238] In particular, referring now to FIG. **17**, it will be appreciated that the LP turbine **630** defines the drive turbine exit areas (A_{DTExit}). FIG. **17** provides a close-up view of an LP turbine rotor blade **920** in an aftmost stage **922** of LP turbine rotor blades **920**. As will be appreciated, the LP turbine rotor blade **920** includes a trailing edge **924** and the aftmost stage **922** of LP turbine rotor blades **920** includes a rotor **926** having a base **928** to which the LP turbine rotor blade **920** is coupled. The base **928** includes a flowpath surface **930** defining in part the working gas flow path **704** through the LP turbine **630**. Moreover, the LP turbine **630** includes a shroud or liner **932** located outward of the LP turbine rotor blade **920** along the radial direction R. The shroud or liner **932** also includes a flowpath surface **934** defining in part the working gas flow path **704** through the LP turbine **630**.

[0239] The turboprop engine **610** (FIG. **13**) defines a reference plane **936** intersecting with an aft-most point of the trailing edge **924** of the LP turbine rotor blade **920** depicted, the reference plane **936** being orthogonal to an airflow direction **938** out the LP turbine **630**. The airflow direction **938** out the LP turbine **630** is parallel to the axial direction A in the embodiment depicted. Further, the LP turbine **630** defines the drive turbine exit area (A_{DTExit}) within the reference plane **936**. More specifically, the LP turbine **630** defines an inner radius (R_{INNER}) extending along the radial direction R within the reference plane **936** from the longitudinal axis **612** to the flowpath surface **930** of the base **928** of the rotor **926** of the aftmost stage **922** of LP turbine rotor blades **920**, as well as an outer radius (R_{OUTER}) extending along the radial direction R within the reference plane **936** from the longitudinal axis **612** to the flowpath surface **934** of the shroud or liner **932**. The LP turbine **630** exit area is defined according to Expression (4):

$$A_{DTExit} = \pi\left(R_{OUTER}^2 - R_{INNER}^2\right). \qquad \text{Expression (4)}$$

[0240] As alluded to earlier, the inventors discovered, unexpectedly during the course of gas turbine engine design—i.e., designing gas turbine engines having a variety of different high pressure compressor exit areas, total power outputs (which is a function of a maximum drive turbine shaft torque and maximum rotational speed; the maximum rotational speed being limited by a drive turbine exit area), maximum exhaust gas temperatures, and supporting technology characteristics and evaluating an overall engine performance and other qualitative turbofan engine characteristics—a significant relationship between a high pressure compressor exit area, total power output (and drive turbine exit area and maximum low pressure torque), and maximum exhaust gas temperature that enables increased engine core operating temperatures and overall engine propulsive/thermal efficiency. The relationship can be thought of as an indicator of the ability of a turboprop or turboshaft engine to have a reduced weight or volume as represented by a high pressure compressor exit area, while maintaining or even improving upon an overall power output as represented by

drive turbine exit area and maximum drive turbine shaft torque, and without overly detrimentally affecting overall engine performance and other qualitative engine characteristics. The relationship applies to an engine that incorporates an intercooler assembly, incorporates a cooled cooling air system, builds portions of the core using material capable of operating at higher temperatures, or a combinations thereof. Significantly, the relationship ties the core size (as represented by the exit area of the higher pressure compressor) to the desired output power and exhaust gas temperature associated with the desired propulsive/thermal efficiency and practical limitations of the engine design, as described below.

[0241] During the design and evaluation of various turboprop and turboshaft engines, the inventors unexpectedly discovered that the integration of these advanced technologies could lead to a net benefit in engine performance, despite the anticipated costs. This discovery was made while exploring different engine architectures, power classes, and mission requirements, and assessing the impact on overall engine performance and qualitative characteristics. The inventors found that the benefits of operating at higher temperatures and pressures, which were previously thought to be cost-prohibitive, could indeed outweigh the costs when the core size is maintained or reduced.

[0242] Referring to the case of an engine that utilizes cooled cooling air for operating at higher temperatures, the inventors discovered, unexpectedly, that the costs associated with achieving a higher compression, enabled by reducing gas temperatures used to cool core components to accommodate higher core gas temperatures, may indeed produce a net benefit, contrary to expectations in the art. Similar results were discovered with the introduction of an intercooler assembly. Referring to the case of utilizing more temperature-resistant material, such as a Ceramic Matrix Composite (CMC), it was found that certain aspects of the engine size, weight, and operating characteristics can be positively affected while taking into account the complexities and/or drawbacks associated with such material. Regardless of the technology, however, the relationship now described can apply to identify the interrelated operating conditions and core size—i.e., maximum drive turbine shaft torque, drive turbine exit area, maximum exhaust gas temperature, and high pressure compressor exit area.

[0243] The inventors of the present disclosure discovered bounding the relationship between a product of total power output (which is a function of a maximum drive turbine shaft torque and maximum rotational speed; the maximum rotational speed being limited by a drive turbine exit area) squared and maximum exhaust gas temperature, divided by the high pressure compressor exit area (corrected specific power) can result in a higher power density core. This bounded relationship, as described herein, takes into due account the amount of overall complexity and cost, and/or a low amount of reliability associated with implementing the technologies required to achieve the operating temperatures and exhaust gas temperature associated with the desired output power levels. The amount of overall complexity and cost may be prohibitively high for gas turbine engines outside the bounds of the relationship as described herein, and/or the reliability may prohibitively low outside the bounds of the relationship as described herein. The relationship discovered, infra, can therefore identify an improved engine configuration suited for a particular mission requirement, one that takes into account efficiency, weight, cost, complexity, reliability, and other factors influencing the optimal choice for an engine configuration.

[0244] In addition to yielding an improved gas turbine engine, as explained in detail above, utilizing this relationship, the inventors found that the number of suitable or feasible gas turbine engine designs capable of meeting the above design requirements could be greatly diminished, thereby facilitating a more rapid down selection of designs to consider as a gas turbine engine is being developed. Such a benefit provides more insight into the requirements for a given gas turbine engine well before specific technologies, integration and system requirements are developed fully. Such a benefit avoids late-stage redesign.

[0245] The desired relationship, referred to herein as a Corrected Specific Power (CSP) of a gas turbine engine, providing for the improved gas turbine engine, discovered by the inventors, is expressed as:

$$\left(\frac{T_{OUT}}{\sqrt{A_{DTExit}}}\right)^2 * \frac{EGT}{A_{HPCExit}} * 10^{-11}. \qquad \text{Expression (5)}$$

[0246] where T_{OUT} is maximum drive turbine shaft torque in Newton meters; EGT is maximum exhaust gas temperature in degrees Celsius; $A_{HPCExit}$ is the high pressure compressor exit area in square meters; and A_{DTExit} is the drive turbine exit area in square meters. As mentioned earlier, the maximum power output of the gas turbine engine is a function of the maximum drive turbine shaft torque (T_{OUT}) and a rotational speed of the LP shaft. The rotational speed of the LP shaft is limited by a size of the LP turbine, as the materials forming the LP turbine have a strength to weight relationship that limits how big the LP turbine can be and how fast the LP turbine can rotate (measured as a function of area (A) times speed (N) squared; AN^2). Expression (5), above, and the limits of CSP identified herein identify a design space where an improved power output is sufficiently high to justify the means for accommodating the increased energy in the flow. The improved power output is more specifically realized through increases in overall pressure ratio and/or EGT, which results in more energy in a flow through the turbine section, allowing for more power extraction by the turbine section for a given engine size. Said another way, application of Expression (5) yields an engine that allows for more maximum drive turbine shaft torque (T_{OUT}) for a give LP turbine size (represented by the drive turbine exit area (A_{DTExit})).

[0247] Referring now to FIGS. **18** and **19**, various exemplary gas turbine engines are illustrated in accordance with one or more exemplary embodiments of the present disclosure. In particular, FIG. **18** provides a table including numerical values corresponding to several of the plotted gas turbine engines in FIG. **19**. FIG. **19** is a plot **1000** of gas turbine engines in accordance with one or more exemplary embodiments of the present disclosure, showing the CSP on a Y-axis **1002** and the EGT on an X-axis **1004**.

[0248] As shown, the plot **1000** in FIG. **19** depicts a first range **1006**, wherein CSP is greater than $0.0001194 \times EGT^2 - 0.103 \times EGT + 22.14$ and less than $0.0003294 \times EGT^2 - 0.3061 \times EGT + 77.91$. The stated advantages of CSP are valid only when the engine design falls within these upper and lower bounds and the EGT is between 525 and 1250. The units of

the CSP values are Newtons squared times degrees Celsius over meters squared. These values represent the optimized range for achieving the desired thermal efficiency and power density. An engine with a CSP within this range is expected to exhibit higher thermal efficiency, as indicated by a lower specific fuel consumption (SFC).

[0249] In addition, FIG. **19** depicts a second range 1010 where CSP is greater than 3.3 and less than 101 and EGT is greater than 600 degrees Celsius and less than 1,000 degrees Celsius; and a third range 1008 where CSP is greater than or equal to 4 and less than or equal to 69 and EGT is greater than 700 degrees Celsius and less than 900 degrees Celsius. For this second range 1010 and third range 1008, the gas turbine engines can be of a lower thrust class (e.g., a turbomachine of the gas turbine engine providing an output power of at least 550 horsepower and up to 2,000 horsepower when operated at a takeoff power level), while also having a compressor section of the turbomachine defining an increased overall pressure ratio (OPR; e.g., greater than 14:1 and less than 22:1). Such an arrangement can allow for the increased power output for a given engine size. For example, an increased torque output of the LP turbine of the turbomachine can be achieved with such an increased OPR by incorporating an intercooling assembly. Designing a gas turbine engine having a CSP and EGT within the second range **1010** or third range **1008**, can allow the gas turbine engines in the noted thrust class and defining the noted OPRs to provide improved overall performance and thermal efficiencies.

[0250] It will be appreciated that although the discussion above is generally related to a turboprop engine having a particular intercooler assembly and a particular engine architecture, in various embodiments of the present disclosure, the relationship outlined above with respect to Expression (5) may be applied to any other suitable engine architecture, including any other suitable technology(ies) to allow the gas turbine engine to accommodate higher temperatures to allow for a reduction in the high pressure compressor exit area and high pressure turbine exit area, while maintaining or even increasing the maximum engine power output without, e.g., prematurely wearing various components within the turbomachine exposed the working gas flowpath.

[0251] For example, reference will now be made to FIG. **20**. FIG. **20** provides a schematic view of a turbomachine **616** in accordance with another exemplary embodiment of the present disclosure. The turbomachine **616** of FIG. **20** may be configured in substantially the same manner as the exemplary turbomachine **616** described above with reference to FIGS. **13** and **14**. Accordingly, the same or similar numbers may refer to the same or similar parts.

[0252] For example, the turbomachine **616** generally includes a compressor section, a combustion section **626**, and a turbine section arranged in serial flow order. However, for the embodiment of FIG. **20**, the compressor section includes a single, HP compressor **622** (i.e., no booster compressor **618**) and the turbine section does not include an intermediate pressure turbine **620**. Notably, with the exemplary embodiment of FIG. **20**, the HP compressor **622** is configured as an axial-centrifugal compressor, including stages of compressor rotor blades and stator vanes and an impeller.

[0253] Further by way of example, reference will now be made to FIGS. **21** through **23**. FIGS. **21** through **23** provide schematic views of three additional turbomachines **616** in accordance with exemplary embodiments of the present disclosure. Each of these turbomachines **616** may be configured in substantially the same manner as the exemplary turbomachine **616** described above with reference to FIGS. **13** and **14**. Accordingly, the same or similar numbers may refer to the same or similar parts.

[0254] For example, each turbomachine **616** generally includes a compressor section, a combustion section **626**, and a turbine section arranged in serial flow order. However, referring particular to the embodiment of FIG. **21**, the compressor section again includes a single, HP compressor **622** (i.e., no booster compressor **618**) and the turbine section does not include an intermediate pressure turbine **620**. Notably, with the exemplary embodiment of FIG. **21**, the HP compressor **622** is configured as a multi-stage, centrifugal compressor, including two stages of impellers (each driven by an HP turbine **628**).

[0255] Referring to FIGS. **22** and **23**, the compressor sections each include a booster compressor **618** in addition to the HP compressor **622**, with both the booster compressor **618** and HP compressor **622** each configured as a centrifugal compressor. The turbine section of each of the turbomachines **616** of FIGS. **22** and **23** further includes an intermediate pressure turbine **620** drivingly coupled to the respective booster compressor **618** through a respective intermediate pressure shaft **635**.

[0256] Further, for the embodiment of FIG. **23**, the gas turbine engine **610** further includes an intercooler assembly **700**, the intercooler assembly **700** having an intercooler heat exchanger **702** in thermal communication with the compressor section. For the embodiment of FIG. **23**, the compressor section defines a transition zone **1050** downstream of the booster compressor **618** and upstream of the HP compressor **622**. The transition zone **1050** defines a portion of a working gas flowpath **704** of the turbomachine **616** extending between the booster compressor **618** and the HP compressor **622**. The intercooler heat exchanger **702** may be incorporated into the transition zone **1050**, such as into one or more of the lines, frames, or the like of the transition zone **1050**. The intercooler assembly **700** of FIG. **23**, and in particular the intercooler heat exchanger **702**, may include or otherwise be in thermal communication with a cooling fluid source.

[0257] However, in other embodiments, the intercooler heat exchanger **702** may be positioned within the working gas flowpath **704**, e.g., having one or more fins, plates, or other heat transfer structures within the working gas flowpath **704**. The intercooler heat exchanger **702** may extend in the circumferential direction, arranged as a **360** degree, axi-symmetric heat exchanger.

[0258] Further by way of example, reference will now be made to FIGS. **24** through **26**. FIGS. **24** through **26** provide schematic views of three additional turbomachines **616** in accordance with exemplary embodiments of the present disclosure. Each of these turbomachines **616** may be configured in substantially the same manner as the exemplary turbomachine **616** described above with reference to FIGS. **21** through **23**, respectively. Accordingly, the same or similar numbers may refer to the same or similar parts.

[0259] For example, each turbomachine **616** generally includes a compressor section, a combustion section **626**, and a turbine section arranged in serial flow order. However, by contrast to the exemplary turbomachines **616** of FIGS. **21** through **23**, for the embodiments of FIGS. **24** through **26**, the

HP compressor **622** is an axial-centrifugal compressor, including stages of compressor rotor blades and stator vanes and an impeller. Briefly, referring particularly to FIG. **24**, the HP compressor **622** includes a first stage impeller, one or more intermediate stages of compressor rotor blades and stator vanes, and an aft-most stage impeller.

[0260] Further by way of example, reference will now be made to FIGS. **27** and **28**. FIGS. **27** and **28** provide schematic views of two additional turbomachines **616** in accordance with exemplary embodiments of the present disclosure. Each of these turbomachines **616** may be configured in substantially the same manner as the exemplary turbomachines **616** described above with reference to FIGS. **22** and **23**, respectively. Accordingly, the same or similar numbers may refer to the same or similar parts.

[0261] For example, each turbomachine **616** generally includes a compressor section, a combustion section **626**, and a turbine section arranged in serial flow order. However, by contrast to the exemplary turbomachines **616** of FIGS. **22** through **23**, for the embodiments of FIGS. **27** and **28**, the booster compressor **618** is an axial-centrifugal compressor, including stages of compressor rotor blades and stator vanes and an impeller.

[0262] Referring now to FIG. **29**, a turboprop engine **610** in accordance with another exemplary embodiment of the present disclosure is provided. The exemplary turboprop engine **610** of FIG. **29** may be configured in a similar manner as the exemplary turboprop engine **610** of FIGS. **13** and **14**, and accordingly, the same or similar numbers may refer to the same or similar parts.

[0263] For example, the turboprop engine **610** of FIG. **29** generally includes a fan assembly **614** and a turbomachine **616**, with the fan assembly **614** being driven by the turbomachine **616** across a power gear box **646**. However, for the embodiment of FIG. **29**, the turboprop engine **610** is configured as a reverse flow engine. In such a manner, it will be appreciated that the turboprop engine **610** is characterized by a general relationship between the direction of the flow of incoming air **650** (such direction can be used to characterize the relative motion of air during a mode of operation of the engine **610** such as a forward thrust mode) and that of a flow of air axially through the turboprop engine **610**. The flow of air through the turbomachine **616** is generally reverse to that of the flow of incoming air **650**. Turning the flow from the direction of the incoming flow of air **650** to the axial direction through the turbomachine **616** is usually performed by an intake channel **654**. The change of direction is reversed in that the bulk direction of the flow of air **650** (itself having a circumferential swirl component imparted by the propeller blades **640** in addition to a longitudinal component) is opposite, or reverse, to the bulk direction of air flow axially through the turbomachine **616** (which itself also includes a longitudinal component but also include radial and circumferential components owing to the shape of the flow path and swirl induced by rotating turbomachinery components) during one or more phases of operation of the turbomachine **616**. Thus, it will also be appreciated that the term "reverse" is a relative comparison of the longitudinal components of the bulk flow of air **650** and bulk flow of air axially within the engine **610**. Though the longitudinal direction of the flow of air **650** may not be perfectly parallel with the axial flow of air through the engine **610**, it will be appreciated that the longitudinal components of the directions the flow of air **650** and the axial flow are reversed.

[0264] Moreover, it will be appreciated that for the embodiment depicted, an exhaust section **632** is not axisymmetric, and instead include one or more exhaust outlets **633** oriented on, e.g., one or more sides of the turboprop engine **610**, such as opposing sides as in the embodiment depicted in FIG. **29**.

[0265] Further, for the embodiment of FIG. **29**, the power gear box **646** is not an offset power gear box, such that a fan axis **645** is aligned with a longitudinal centerline **612** of the turbomachine **616**.

[0266] In addition, the exemplary turboprop engine **610** of FIG. **29** includes an intercooler assembly **700**, the intercooler assembly **700** having an intercooler heat exchanger **702** in thermal communication with the compressor section. For the embodiment of FIG. **29**, the compressor section defines a transition zone **1050** downstream of the booster compressor **618** and upstream of the HP compressor **622**. The transition zone **1050** defines a portion of a working gas flowpath **704** of the turbomachine **616** extending between the booster compressor **618** and the HP compressor **622**. The intercooler heat exchanger **702** is, however, for the embodiment shown located externally from the turbomachine **616** (e.g., in a pylon, wing, or fuselage of an aircraft incorporating the turboprop engine **610**). The intercooler assembly **700** includes an outflow duct **720** extending from the compressor section to the externally-located intercooler heat exchanger **702**, and an inflow duct **722** extending from the intercooler heat exchanger **702** back to the compressor section. In the embodiment depicted, the outflow duct **720** and the inflow duct **722** are each in airflow communication with the compressor section a transition zone **1050**.

[0267] The intercooler assembly **700** of FIG. **29**, and in particular the intercooler heat exchanger **702**, may include or otherwise be in thermal communication with a cooling fluid source (e.g., through inlet and outlet lines **706**, **708**). Including the intercooler heat exchanger **702** at the location external to the turbomachine **616** may allow the intercooler heat exchanger **702** to be positioned closer to the cooling fluid source. In situations where the cooling fluid source is a flow of cryogenic fuel, such as liquid hydrogen, it can be more efficient to redirect the airflow with less redirecting of the fuel.

[0268] Further, still, referring now to FIG. **30**, a turboprop engine **610** in accordance with yet another exemplary embodiment of the present disclosure is provided. The exemplary turboprop engine **610** of FIG. **30** may be configured in a similar manner as the exemplary turboprop engine **610** of FIGS. **13** and **14**, and accordingly, the same or similar numbers may refer to the same or similar parts.

[0269] However, for the embodiment of FIG. **30**, the turboprop engine **610** is arranged in a "pusher" configuration, such that a fan assembly **614** is positioned aft of a turbomachine **616** of the turboprop engine **610**. With such an exemplary aspect, a low pressure shaft **636** of the turbomachine **616** need not extend concentrically with, e.g., a high pressure shaft **634**, and instead may extend aft directly to a power gear box **646** and the fan assembly **614**. Such a configuration can allow for more desirably mechanical properties of the turboprop engine **610**.

[0270] Referring now to FIG. **31**, a turboprop engine **610** in accordance with still another exemplary embodiment of the present disclosure is provided. The turbomachine **616** of FIG. **31** may be configured in a similar manner as the

exemplary turboprop engine **610** of FIGS. **13** and **14**, and accordingly, the same or similar numbers may refer to the same or similar parts.

[0271] However, it will be appreciated that for the embodiment of FIG. **31**, the turbomachine **616** does not include an intercooler assembly **700**, and instead the turbomachine **616** includes a Cooled Cooling Air ("CCA") system **1100**. The CCA system **1100** generally includes a CCA heat exchanger **1102**, a cold fluid delivery assembly **1104**, and a hot air bleed assembly **1106**.

[0272] The cold fluid delivery assembly **1104** generally includes a cold fluid inlet duct **1108** and a cold fluid outlet duct **1110**. The cold fluid inlet duct **1108** is in airflow communication with a cold fluid source **1112** and the cold fluid outlet duct **1110** is in airflow communication with a cold fluid sink **1114**. The cold fluid inlet duct **1108** is configured to provide a cooling fluid, such as a cooling airflow, from the cold fluid source **1112** to the CCA heat exchanger **1102**, and the cold fluid outlet duct **1110** is configured to receive the cooling fluid, such as the cooling airflow, from the CCA heat exchanger **1102** and exhaust it to the cold fluid sink **1114**. In certain exemplary embodiments, the cold fluid source **1112** may be an airflow over the turbomachine **616** (e.g., a propeller stream), a bleed airflow from the compressor section, a fuel flow, etc.

[0273] It will be appreciated that as used herein, the term "cold fluid" in the context of the cold fluid delivery assembly **1104** refers to a fluid at a temperature lower than a temperature of an airflow received through the hot air bleed assembly **1106**. Accordingly, the term is a relative term and does not imply or require any absolute temperature.

[0274] The hot air bleed assembly **1106** includes a hot air bleed duct **1116** in airflow communication with a working gas flowpath **704** through the turbomachine **616** at a downstream end of the compressor section, or a location downstream of the compressor section and upstream of a combustor of the combustion section **626**. The hot air bleed assembly **1106** further includes a CCA delivery duct **1118** in thermal communication with a hot component of the turbomachine **616**. In particular, in the embodiment depicted, the CCA delivery duct **1118** is in thermal communication with a first stage of turbine rotor blades of the HP turbine **628** of the turbomachine **616**.

[0275] Additionally, or alternatively, in other exemplary embodiments, the CCA delivery duct **1118** may be in thermal communication with an aft-most stage of the HP compressor **622**, a rotor at the aft-most stage of the HP compressor **622**, a sump within the turbine section, a rotor of the HP turbine **628**, one or more airfoils through the HP turbine **628**, or other hot components of the turbomachine **616**.

[0276] During operation, high pressure airflow is bled through the hot air bleed duct **1116** and provided to the CCA heat exchanger **1102**, where heat from the high pressure airflow is transferred to the cooling airflow through the cold fluid delivery assembly **1104**. The cooled high pressure airflow from the CCA heat exchanger **1102** is then provided through the CCA delivery duct **1118** to the hot component, to cool the hot component.

[0277] As is depicted in phantom, in certain exemplary embodiments, the hot air bleed assembly **1106**, and in particular the hot air bleed duct **1116**, may be configured to receive bleed air from one or more locations upstream of the location between the HP compressor **622** and the combustor.

[0278] In at least certain exemplary embodiments, when the gas turbine engine **610** is operated at a takeoff power level, the CCA system **1100** is configured to provide a temperature reduction of the cooling airflow (i.e., the airflow through the hot air bleed assembly **1106**) equal to at least 15% of the EGT and up to 45% of the EGT. Further, when the gas turbine engine **610** is operated at the takeoff power level, the CCA system **1100** is configured to receive between 2.5% and 35% of an airflow through a working gas flowpath **704** of the turbomachine **616** at an inlet to a first compressor of the compressor section (the HP compressor **622** in the embodiment depicted).

[0279] Inclusion of the CCA system **1100** may allow for the turbomachine **616** to operate with a higher EGT, higher overall pressure ratios through the compressor section, or both, to define a CSP within one or more of the ranges described above.

[0280] Notably, however, in other exemplary embodiments, one or more turbomachines **616** of the present disclosure can have other suitable configurations. For example, referring now to FIG. **32**, a CCA system **1100** is provided where a hot air bleed duct **1116** of the CCA system **1100** is in airflow communication with a booster compressor **618** upstream of an HP compressor **622**. The hot air bleed duct **1116** includes a pump **1120** to increase a pressure of the airflow through the hot air bleed duct **1116** to enable the airflow to be provided, e.g., to the first stage of turbine rotor blades of the HP turbine **628**.

[0281] Moreover, it will be appreciated that the exemplary turbomachine architectures described herein are by way of example only, and that in other embodiments, other suitable architectures may be provided. Further, in other exemplary embodiments, the CCA systems **1100**, intercooler assemblies **700**, etc. may be incorporated into any suitable turbomachine **616** architecture of the present disclosure. Moreover, although the turbomachines **616** described herein have been described in the context of turboprop engines **610**, in other exemplary embodiments, the gas turbine engines may not include a propeller assembly **614** and accordingly may instead be configured as a turboshaft engine, usable for any suitable turboshaft application.

[0282] Referring now to FIG. **33**, a turbomachine **616** in accordance with still another exemplary embodiment of the present disclosure is provided. The turbomachine **616** of FIG. **33** may be configured in a similar manner as the exemplary turboprop engine **610** of FIGS. **13** and **14**, and accordingly, the same or similar numbers may refer to the same or similar parts.

[0283] The exemplary turbomachine **616** depicted in FIG. **33** generally includes a substantially tubular outer casing **1202** that partially encloses an annular inlet duct **654**. The inlet duct **654** includes at least a portion extending generally along the radial direction R, and is further configured to turn a direction of an air flow therethrough, such that the resulting airflow is generally along the axial direction A. Additionally, the outer casing **1202** encases, in serial flow relationship, a compressor section including a single compressor **622**; a combustion section **626** including a reverse flow combustor; a turbine section including a high pressure (HP) turbine **628** and a low pressure (LP) turbine **630**; and an exhaust section **6634**. Moreover, the turboshaft engine **610** depicted is a dual-spool engine, including a first, high pressure (HP) shaft or spool **634** coupling the HP turbine **628** to the compressor **622**, and a low pressure (LP) shaft or

spool **636** coupled to the LP turbine **630**, and drivingly connecting the LP turbine **630** to a gearbox **646** (which may drive, e.g., a fan assembly (not shown)).

[0284] Notably, for the embodiment depicted, the turbomachine **616** further includes a stage of inlet guide vanes **1204** at a forward end of a working gas flowpath **704**. Specifically, the inlet guide vanes **1204** are positioned at least partially within the inlet duct **654**, the inlet duct **654** located upstream of the compressor section, including the compressor **622**. More specifically, for the embodiment depicted the compressor section, including the compressor **622**, is located downstream of the stage of inlet guide vanes **1204**. Further, the exemplary stage of inlet guide vanes **1204** of FIG. **33** are configured as variable inlet guide vanes **1204**. The variable inlet guide vanes **1204** are each rotatable about a pitch axis **1206**, allowing for the guide vanes **1204** to direct an airflow through the inlet duct **654** into the compressor **622** of the compressor section in a desired direction. In certain embodiments, each of the variable inlet guide vanes **1204** may be configured to rotate completely about the respective pitch axis **1206**, or alternatively, each of the plurality of variable inlet guide vanes **1204** may include a flap or tail configured to rotate about a respective pitch axis **1206**. It should be appreciated, however, that in still other exemplary embodiments, each of the plurality of guide vanes may not be configured to rotate about a respective pitch axis **1206**, and instead may include any other suitable geometry or configuration allowing for a variance in a direction of the airflow over the variable guide vanes **1204**. Additionally, in other exemplary embodiments, the stage of inlet guide vanes **1204** may instead be located at any other suitable location within the inlet duct **654**.

[0285] Furthermore, the compressor **622** of the compressor section includes at least three stages of compressor rotor blades. More specifically, for the embodiment depicted, the compressor **622** of the compressor section includes at least four stages of compressor rotor blades. More specifically still, for the embodiment depicted, the compressor **622** of the compressor section includes four stages of radially oriented compressor rotor blades **1208**, and an additional stage of centrifugal compressor rotor blades **1210**.

[0286] Additionally, between each stage of compressor rotor blades **1208**, **1210**, the compressor section includes a stage of compressor stator vanes. Notably, the first stage of compressor stator vanes is configured as a stage of variable compressor stator vanes **1212**, such that each of the variable compressor stator vanes **1212** may rotate about a respective pitch axis **1214**. By contrast, the remaining stages of compressor stator vanes are configured as fixed compressor stator vanes **1216**. Such a configuration may assist with increasing an overall pressure ratio of the compressor **622**. For example, the compressor **622** having the multiple number of stages of compressor rotor blades **1208**, **1210**, and optionally including a stage of variable compressor stator vanes **1212**, in addition to being located downstream of a stage of variable inlet guide vanes **1204**, may allow for the compressor **622** of the compressor section to operate in a more efficient manner. More specifically, for the embodiment depicted, the compressor section configured in accordance with one or more exemplary aspects of the present disclosure defines an overall pressure ratio of at least 14:1, such as at least 15:1. For example, in certain exemplary embodiments, the overall pressure ratio of the compressor section may be at least 16:1, and up to 22:1, such as up to 20:1.

[0287] Notably, for the embodiment depicted, the HP turbine **628** includes at least two stages of HP turbine rotor blades **1218** and up to three stages of HP turbine rotor blades **1218**. In particular, the HP turbine **628** includes two stages of HP turbine rotor blades **1218**. Such a configuration may ensure a sufficient amount of power is provided to the compressor **622** through the HP shaft **634**. For the embodiment depicted, the HP turbine rotor blades **58** of the at least two stages of HP turbine rotor blades **58** are formed of a ceramic matrix composite material. Accordingly, the HP turbine rotor blades **58** may be capable of withstanding the relatively elevated temperatures within the HP turbine **628** without requiring a flow of cooling air to cool the HP turbine rotor blades **58**.

[0288] It should be appreciated, however, that in other exemplary embodiments, the HP turbine rotor blades **1218** may be air cooled HP turbine rotor blades. For example, referring briefly to FIG. **34** providing a perspective view of an HP turbine rotor blade **1218** in accordance with an exemplary embodiment of the present disclosure, the HP turbine rotor blade **1218** may include a plurality of cooling holes **1220** through which a cooling airflow **1222** is provided during operation of the turboshaft engine **610** to maintain a temperature of the HP turbine rotor blade **1218** below a predetermined temperature threshold. The cooling airflow **1222** may be received from, e.g., one or more of the CCA systems described herein above.

[0289] As discussed above, improved power output of a gas turbine engine can be realized through increasing the overall pressure ratio, which results in more energy in the flow of air through the turbine section, allowing for more power extraction by the turbine section for a given engine size. As discussed above, reducing the size of the high pressure compressor exit area ($A_{HPCExit}$) increases the overall pressure ratio. As such, reducing the size of the high pressure compressor exit area ($A_{HPCExit}$) results in a higher power density core. However, the benefits of this increased pressure/airflow can be negatively impacted by engine components in the airflow path that cause drag and pressure losses. For instance, some gas turbine engines have a compressor section with a centrifugal compressor or centrifugal compressor stage, such as shown in the gas turbine engine of FIG. **33**. The centrifugal compressor stage includes an impeller with blades that discharge flow in a radial direction. This discharge flow passes through a deswirler that turns the flow through 90° from radial to axial directions and also removes the "swirl" (i.e., tangential velocity component) from the flow. In some examples the deswirler is one unit that is bolted to a stationary part of the compressor. A sump housing that surrounds a shaft and encloses numerous bearings and seals is provided as a separate unit that is bolted to another stationary part of the compressor. It is necessary to provide service tubes (e.g., conduits) that interconnect between the sump housing and the exterior of the engine. The purpose of the service tubes is to provide oil supply to the bearings, to drain away used oil, to provide venting/pressurization air, and so forth. In known engine designs with a centrifugal compressor stage, the service tubes are downstream of the deswirler and pass radially through the primary air flowpath, which creates drag and therefore causes pressure losses between the compressor

and the combustor. Furthermore, the installation process for the service tubes requires installing fittings and welding the tubes leading to added labor cost, as well as additional costs associated with having the supplementary parts necessary for fitting and welding.

[0290] As disclosed in further detail below, some embodiments of an example deswirler assembly disclosed herein incorporate integral service tubes and heat shields. In particular, the exemplary deswirler assembly includes one or more deswirler vanes with hollow interiors that enable the service tubes to pass through the vanes. As such, the service tubes are removed from the primary airflow path and, thus, this design reduces or eliminates drag and pressure losses that would otherwise negatively impact the high pressure/airflow through the engine. Therefore, the example deswirler assembly helps to maintain and/or improve the high pressure/temperature air flow provided by the reduced high pressure compressor exit area ($A_{HPCExit}$) discussed above and, thus, results in a more efficient and higher power engine. Further, by enabling the service tubes to pass through the vanes, the example deswirler assembly enables a more compact or denser engine configuration. Also, the exemplary heat shields help to shield the service tubes from the increased temperatures produced by the higher power engines disclosed herein.

[0291] FIG. **35** shows an exemplary embodiment of a centrifugal compressor stage **3500** of a compressor section of a gas turbine engine. The centrifugal compressor stage **3500** can be implemented as any of the example centrifugal compressors disclosed herein, such as the HP compressor **622** of FIGS. **13** and **14**, the HP compressor **622** of FIG. **16**, the HP compressor **622** or booster compressor **618** of FIGS. **20-32**, and/or the centrifugal stage of the turboshaft engine **610** of FIG. **33**, for example.

[0292] The centrifugal compressor stage **3500** includes an impeller **3502** that is coupled to, and turned by, a shaft **3504**. The shaft **3504** can correspond to the HP shaft or spool **634** that drives the HP turbine **628** of FIG. **33**, for example. The air discharged from the impeller **3502** is collected by a deswirler assembly **3508** and redirected towards a downstream combustor (e.g., the combustion section **626** of FIG. **33**). In some examples, the air discharged from the impeller **3502** is passed through a diffuser before being collected by the deswirler assembly **3508**. In some examples, the deswirler assembly **3508** at least partially functions as a diffuser.

[0293] The gas turbine engine includes a bearing **3510** (e.g., a rolling-element bearing) that rotatably supports the shaft **3504**. The bearing **3510** and a portion of the shaft **3504** are enclosed in a volume referred to as a sump **3512**. The sump **3512** contains oil or another lubricant to lubricate the bearing **3510** and the shaft **3504**. As shown in FIGS. **35-38**, the deswirler assembly **3508** is an annular structure comprising a disk-like inner portion **3514** with a generally cylindrical outer portion **3516** disposed at the outer periphery of the inner portion **3514**. The inner portion **3514** may include appropriate mounting features such as bolt holes (not shown).

[0294] As shown in FIGS. **35-38**, the outer portion **3516** is double-walled and includes an inner wall **3518***a* and an outer wall **3518***b* defining an air flowpath **3519**. Air flowing into the centrifugal compressor stage **3500** is directed radially outward by the impeller **3502**, and then flows through the air flowpath of the outer portion **3516** wherein the air flow is turned **90°** back to an axial direction. As shown in FIGS. **36-38**, the deswirler assembly **3508** includes an array of deswirler vanes disposed in the air flowpath **3519** and extending between the inner and outer walls **3518***a*, **3518***b*. The deswirler vanes may be streamlined or airfoil-shaped and are configured to reduce or remove a tangential velocity component from flow exiting the impeller **3502**.

[0295] The deswirler assembly **3508** includes a first set of deswirler vanes **3600** that have a relatively small thickness (measured from pressure side to suction side) for best aerodynamic performance. The first set of deswirler vanes **3600** may be of solid construction.

[0296] The deswirler assembly **3508** also includes a second set of deswirler vanes **3602** that are thicker than the rest of the first set of deswirler vanes **3600**. The second set of deswirler vanes **3602** have a hollow interior space **3900** (FIG. **39**). The deswirler assembly **3508** can include any number of the second set of deswirler vanes **3602**, such as one, two, three, etc. The larger deswirler vanes **3602** can be positioned periodically between adjacent ones of the smaller deswirler vanes **3600**, such as every tenth one of the first set of deswirler vanes **3600**. For example, FIG. **39** shows a plurality of the first set of deswirler vanes **3600** and one of the second set of deswirler vanes **3602**. The gas turbine engine includes a service tube **3520** as shown in FIGS. **35-39**. The service tube **3520** fluidly couples the sump **3512** to an exterior of the gas turbine engine. The service tube **3520** can be used to supply or return oil in the sump **3512**. As shown in FIGS. **35-39**, the service tube **3520** extends through the interior space **3900** of one of the second set of vanes **3602**. As such, the service tube **3520** is not disposed in the air flowpath **3519**, which reduces or eliminates drag that would otherwise be caused by the service tube **3520** in the air flowpath **3519**. The other ones of the second set of deswirler vanes **3602** can similarly accommodate service tubes. In some examples, the gas turbine engine includes a heat shield **3522** disposed around at least a portion of the service tube **3520**. The heat shield **3522** helps to protect the service tube **3520** from the increased temperatures produced by the increased pressure ratio discussed above. In some examples, the heat shield **3522** is separated from the service tube **3520** by an air gap or space.

[0297] In the illustrated example, the deswirler assembly **3508** also includes an integral sump housing **3524**, defined as part of the inner portion **3514**. The sump housing **3524** surrounds at least a portion of the shaft **3504** and the bearing **3510** and defines the sump **3512**. The sump housing **3524** also provides physical mounting for the bearing **3510** and one or more seal assemblies (not shown). Portions of the heat shields **3522** described above may be integrated into the sump housing **3524**.

[0298] The deswirler assembly **3508** disclosed above has several benefits compared to prior art designs. The aerodynamically tailored tube shape allows for reduction in losses in the deswirler and improves engine performance. While there may be some pressure losses caused by making certain ones of the deswirler vanes thicker to accommodate the service tubes, the overall pressure losses are less because the service tubes do not lie directly in the primary air flowpath.

[0299] The specific mechanical design of the deswirler assembly and its components may be altered to suit various specific applications while still incorporating the basic principles described herein.

[0300] Referring again to FIG. **33**, it will be appreciated, that the turboshaft engine **610** depicted in FIG. **33** is a relatively small turboshaft engine **610**. For example, the turbomachine **616** may be configured to provide an output power of at least 550 horsepower and less than 2,000 horsepower when operated at a takeoff power level. With such a configuration, the compressor section (including the compressor **622**) may have a nominal design of less than about 10.5 pounds per second of airflow when operated at a takeoff power level. Notably, as used herein, "horsepower" refers to brake horsepower during standard day operating conditions, i.e., a horsepower delivered to an output drive shaft assembly **1224** by the LP shaft **636** (across the power gear box **646**) during operation of the turboshaft engine at a takeoff power level.

[0301] Moreover, it will be appreciated that in still other exemplary aspects, the gas turbine engine may include additional or alternative technologies to allow the gas turbine engine to accommodate higher temperatures while maintaining or even increasing the maximum turbofan engine thrust output, as may be indicated by a reduction in the high pressure compressor exit area, without, e.g., prematurely wearing on various components within the turbomachine exposed to the working gas flowpath.

[0302] For example, as discussed in more detail above, in additional or alternative embodiments, a gas turbine engine, such as a turboprop or turboshaft engine, may incorporate advanced materials capable of withstanding the relatively high temperatures at downstream stages of a high pressure compressor (e.g., at a last stage of high pressure compressor rotor blades), and downstream of the high pressure compressor (e.g., a first stage of an HP turbine, downstream stages of the HP turbine, an LP turbine, an exhaust section, etc.). In particular, in at least certain exemplary embodiments, a gas turbine engine of the present disclosure may include an airfoil (e.g., rotor blade or stator vane) in one or more of the HP compressor, the first stage of the HP turbine, downstream stages of the HP turbine, the LP turbine, the exhaust section, or a combination thereof formed of a ceramic-matrix-composite or "CMC."

[0303] Additionally, or alternatively still, in other exemplary embodiments, a gas turbine engine of the present disclosure may include an airfoil (e.g., rotor blade or stator vane) in one or more of an HP compressor, a first stage of an HP turbine, downstream stages of the HP turbine, an LP turbine, an exhaust section, or a combination thereof formed in part, in whole, or in some combination of materials including but not limited to titanium, nickel, and/or cobalt based superalloys (e.g., those available under the name Inconel® available from Special Metals Corporation). One or more of these materials are examples of materials suitable for use in an additive manufacturing processes.

[0304] Further, it will be appreciated that in at least certain exemplary embodiments of the present disclosure, a method of operating a gas turbine engine is provided. The method may be utilized with one or more of the exemplary gas turbine engines discussed herein, such as in FIGS. **13** through **17** and **20** through **32**. The method includes operating the gas turbine engine at a takeoff power level, wherein operating the gas turbine engine at the takeoff power level includes driving a propeller of a propeller assembly across a propeller shaft of the propeller assembly, the gas turbine engine further including a turbomachine with a high pressure compressor defining a high pressure compressor exit area ($A_{HPCExit}$) in square inches and a low pressure turbine defining a drive turbine exit area (A_{DTExit}) in square inches, the gas turbine engine defining a maximum exhaust gas temperature (EGT) in degrees Celsius, a maximum drive turbine shaft torque (T_{OUT}) in Newton meters, and a corrected specific power in Newtons squared times degrees Celsius over meters squared. The corrected specific power is determined in accordance with Expression (3), and is greater than $0.0001194\times EGT^2-0.103\times EGT+22.14$ and less than $0.0003294\times EGT^2-0.3061\times EGT+77.91$.

[0305] In certain exemplary aspects, operating the gas turbine engine at the takeoff power level further includes reducing a temperature of a cooling airflow provided to a high pressure turbine of the gas turbine engine with a cooled cooling air system. Additionally, or alternatively, operating the gas turbine engine at the takeoff power level further includes reducing a temperature of an airflow through the compressor section with an intercooler assembly.

[0306] This written description uses examples to disclose the present disclosure, including the best mode, and also to enable any person skilled in the art to practice the disclosure, including making and using any devices or systems and performing any incorporated methods. The patentable scope of the disclosure is defined by the claims, and may include other examples that occur to those skilled in the art. Such other examples are intended to be within the scope of the claims if they include structural elements that do not differ from the literal language of the claims, or if they include equivalent structural elements with insubstantial differences from the literal languages of the claims.

[0307] Further aspects are provided by the subject matter of the following clauses:

[0308] A gas turbine engine comprising: a turbomachine comprising a compressor section, a combustion section, and a turbine section arranged in serial flow order, the compressor section having a high pressure compressor defining a high pressure compressor exit area ($A_{HPCExit}$) in square inches; wherein the gas turbine engine defines a maximum exhaust gas temperature (EGT) in degrees Celsius, a total sea level static thrust output (Fn_{Total}) in pounds, and a corrected specific thrust, wherein the corrected specific thrust is greater than or equal to 42 and less than or equal to 90, the corrected specific determined as follows: $Fn_{Total}\times EGT/(A_{HPCExit}^2\times 1000)$.

[0309] The gas turbine engine of the preceding clauses wherein the corrected specific thrust is from 42 to 90, such as from 45 to 80, such as from 50 to 80.

[0310] The gas turbine engine of the preceding clauses, wherein the EGT is greater than 1000 degrees Celsius and less than 1300 degrees Celsius.

[0311] The gas turbine engine of any preceding clause, wherein the EGT is greater than 1100 degree Celsius and less than 1250 degrees Celsius.

[0312] The gas turbine engine of any preceding clause, wherein the EGT is greater than 1150 degree Celsius and less than 1250 degrees Celsius.

[0313] The gas turbine engine of any preceding clause, wherein the EGT is greater than 1000 degree Celsius and less than 1300 degrees Celsius, and wherein the corrected specific thrust is greater than or equal to 45.

[0314] The gas turbine engine of any preceding clause, wherein the EGT is greater than 1000 degree Celsius and less than 1300 degrees Celsius, and wherein the corrected specific thrust is greater than or equal to 50.

[0315] The gas turbine engine of any preceding clause, wherein the turbine section comprises a high pressure turbine having a first stage of high pressure turbine rotor blades, and wherein the gas turbine engine further comprises: a cooled cooling air system in fluid communication with the first stage of high pressure turbine rotor blades.

[0316] The gas turbine engine of one or more of the preceding clause, wherein the cooled cooling air system is further in fluid communication with the high pressure compressor for receiving an airflow from the high pressure compressor, and wherein the cooled cooling air system further comprises a heat exchanger in thermal communication with the airflow for cooling the airflow.

[0317] The gas turbine engine of any preceding clause, wherein when the gas turbine engine is operated at a takeoff power level, the cooled cooling air system is configured to provide a temperature reduction of a cooling airflow equal to at least 15% of the EGT and up to 45% of the EGT.

[0318] The gas turbine engine of any preceding clause, wherein when the gas turbine engine is operated at a takeoff power level, the cooled cooling air system is configured to receive between 2.5% and 35% of an airflow through a working gas flowpath of the turbomachine at an inlet to a compressor of the compressor section.

[0319] The gas turbine engine of any preceding clause, further comprising a primary fan driven by the turbomachine.

[0320] The gas turbine engine of any preceding clause, further comprising an inlet duct downstream of the primary fan and upstream of the compressor section of the turbomachine; and a secondary fan located within the inlet duct.

[0321] The gas turbine engine of any preceding clause, wherein the gas turbine engine defines a bypass passage over the turbomachine, and wherein the gas turbine engine defines a third stream extending from a location downstream of the secondary fan to the bypass passage.

[0322] The gas turbine engine of any preceding clause, wherein the secondary fan is a single stage secondary fan.

[0323] A method of operating a gas turbine engine, comprising: operating the gas turbine engine at a takeoff power level, the gas turbine engine having a turbomachine with a high pressure compressor defining a high pressure compressor exit area ($A_{HPCExit}$) in square inches, the gas turbine engine defining a maximum exhaust gas temperature (EGT) in degrees Celsius, a total sea level static thrust output (Fn_{Total}) in pounds, and a corrected specific thrust; wherein the corrected specific thrust is greater than or equal to 42 and less than or equal to 90, the corrected specific thrust determined as follows: $Fn_{Total} \times EGT/(A_{HPCExit}^2 \times 1000)$.

[0324] The method of any preceding clause, wherein the EGT defined by the gas turbine engine is greater than 1000 degree Celsius and less than 1300 degrees Celsius.

[0325] The method of any preceding clause, wherein the EGT defined by the gas turbine engine is greater than 1100 degree Celsius and less than 1300 degrees Celsius.

[0326] The method of any preceding clause, wherein the EGT defined by the gas turbine engine is greater than 1000 degree Celsius and less than 1300 degrees Celsius, and wherein the corrected specific thrust defined by the gas turbine engine is greater than or equal to 45.

[0327] The method of any preceding clause, wherein operating the gas turbine engine at the takeoff power level further comprises reducing a temperature of a cooling airflow provided to a high pressure turbine of the gas turbine engine with a cooled cooling air system.

[0328] The method of any preceding clause, wherein reducing the temperature of the cooling airflow provided to the high pressure turbine of the gas turbine engine with the cooled cooling air system comprises providing a temperature reduction of the cooling airflow equal to at least 15% of the EGT and up to 45% of the EGT.

[0329] The gas turbine engine of any preceding clause, wherein the cooled cooling air systems includes a thermal bus cooled cooling air system (see, e.g., FIGS. **4** and **5**).

[0330] The gas turbine engine of any preceding clause, wherein the cooled cooling air systems includes a dedicated heat exchanger cooled cooling air system (i.e., a cooled cooling air system including a heat exchanger dedicated to the cooled cooling air system).

[0331] The gas turbine engine of any preceding clause, wherein the cooled cooling air systems includes a bypass heat exchanger cooled cooling air system having a heat sink heat exchanger thermally coupled to an airflow through a bypass passage (see, e.g., FIG. **9**).

[0332] The gas turbine engine of any preceding clause, wherein the cooled cooling air systems includes an air-to-air cooled cooling air system (a cooled cooling air system having a heat sink heat exchanger configured to transfer heat to an airflow; see, e.g., FIG. **9**.

[0333] The gas turbine engine of any preceding clause, wherein the cooled cooling air systems includes an oil-to-air cooled cooling air system (a cooled cooling air system having a heat sink heat exchanger configured to transfer heat to an oil flow).

[0334] The gas turbine engine of any preceding clause, wherein the cooled cooling air systems includes a fuel-to-air cooled cooling air system (a cooled cooling air system having a heat sink heat exchanger configured to transfer heat to a fuel flow, such as a Jet A fuel flow, a liquid hydrogen or hydrogen gas fuel flow, etc.; see, e.g., FIG. **4**). or a combination thereof. In one or more of the exemplary cooled cooling air systems described herein, the

[0335] The gas turbine engine of any preceding clause, wherein the cooled cooling air systems is configured to receive the cooling air from a downstream end of a high pressure compressor.

[0336] The gas turbine engine of any preceding clause, wherein the cooled cooling air systems is configured to receive the cooling air from an upstream end of the high pressure compressor.

[0337] The gas turbine engine of any preceding clause, wherein the cooled cooling air systems is configured to receive the cooling air from a downstream end of a low pressure compressor.

[0338] The gas turbine engine of any preceding clause, wherein the cooled cooling air systems is configured to receive the cooling air from an upstream end of the low pressure compressor.

[0339] The gas turbine engine of any preceding clause, wherein the cooled cooling air systems is configured to receive the cooling air from a location between compressors.

[0340] The gas turbine engine of any preceding clause, wherein the cooled cooling air systems is configured to receive the cooling air from a bypass passage.

[0341] A gas turbine engine comprising: a turbomachine comprising a compressor section, a combustion section, and a turbine section arranged in serial flow order, the compres-

sor section having a high pressure compressor defining a high pressure compressor exit area ($A_{HPCExit}$) in square inches and the turbine section having a drive turbine defining a drive turbine exit area (A_{DTExit}) in square inches, the turbomachine further comprising a drive turbine shaft coupled to the drive turbine; wherein the gas turbine engine defines a maximum exhaust gas temperature (EGT) in degrees Celsius, a maximum drive turbine shaft torque (T_{OUT}) in Newton meters, and a corrected specific power (CSP) in Newtons squared times degrees Celsius over meters squared, wherein the corrected specific power is determined as follows:

$$\left(\frac{T_{OUT}}{\sqrt{A_{DTExit}}}\right)^2 * \frac{EGT}{A_{HPCExit}} * 10^{-11};$$

wherein CSP is greater than $0.0001194 \times EGT^2 - 0.103 \times EGT + 22.14$ and less than $0.0003294 \times EGT^2 - 0.306 \times EGT + 77.91$; and wherein EGT is greater than 525 degrees Celsius and less than 1250 degrees Celsius.

[0342] The gas turbine engine of any preceding clause, wherein CSP is less than 210 and greater than 1.

[0343] The gas turbine engine of any preceding clause, wherein the EGT is greater than 750 degree Celsius and less than 1100 degrees Celsius, and wherein CSP is less than 140 and greater than 12.1.

[0344] The gas turbine engine of any preceding clause, wherein the Tour is greater than 530 Newton-meters and less than 4740 Newton-meters.

[0345] The gas turbine engine of any preceding clause, further comprising: an intercooler assembly comprising a heat exchanger, the heat exchanger in thermal communication with the compressor section.

[0346] The gas turbine engine of any preceding clause, wherein the compressor section defines in part a working gas flowpath through the turbomachine, and wherein heat exchanger is in direct thermal communication with the working gas flowpath through the compressor section.

[0347] The gas turbine engine of any preceding clause, wherein the compressor section defines in part a working gas flowpath through the turbomachine, wherein the compressor section comprises a first compressor and a second compressor, and wherein the heat exchanger is in thermal communication with the working gas flowpath through the compressor section at a location between the first compressor and the second compressor.

[0348] The gas turbine engine of any preceding clause, wherein the compressor section defines in part a working gas flowpath through the turbomachine, wherein the compressor section comprises a compressor defining an upstream end and a downstream end, and wherein the heat exchanger is in thermal communication with the working gas flowpath through the compressor at a location between the upstream end and the downstream end of the compressor.

[0349] The gas turbine engine of any preceding clause, wherein the heat exchanger is located externally of the turbomachine.

[0350] The gas turbine engine of any preceding clause, further comprising a fuel system configured as a liquid hydrogen fuel system, and wherein the heat exchanger is in thermal communication with the liquid hydrogen fuel system.

[0351] The gas turbine engine of any preceding clause, wherein the compressor section comprises a first compressor, and wherein the first compressor is configured as an axial compressor, a centrifugal compressor, or an axial-centrifugal compressor.

[0352] The gas turbine engine of any preceding clause, wherein the compressor section further comprises a second compressor, and wherein the second compressor is configured as an axial compressor, a centrifugal compressor, or an axial-centrifugal compressor.

[0353] The gas turbine engine of any preceding clause, wherein the turbine section comprises a high pressure turbine having a first stage of high pressure turbine rotor blades, and wherein the gas turbine engine further comprises: a cooled cooling air system in fluid communication with the first stage of high pressure turbine rotor blades.

[0354] The gas turbine engine of any preceding clause, wherein the cooled cooling air system is further in fluid communication with the high pressure compressor for receiving an airflow from the high pressure compressor, and wherein the cooled cooling air system further comprises a heat exchanger in thermal communication with the airflow for cooling the airflow.

[0355] The gas turbine engine of any preceding clause, wherein when the gas turbine engine is operated at a takeoff power level, the cooled cooling air system is configured to provide a temperature reduction of a cooling airflow equal to at least 15% of the EGT and up to 45% of the EGT.

[0356] The gas turbine engine of any preceding clause, wherein when the gas turbine engine is operated at a takeoff power level, the cooled cooling air system is configured to receive between 2.5% and 35% of an airflow through a working gas flowpath of the turbomachine at an inlet to a compressor of the compressor section.

[0357] The gas turbine engine of any preceding clause, wherein the gas turbine engine is a turboprop engine further comprising: a propeller assembly, wherein the propeller assembly comprises a propeller driven by the drive turbine shaft.

[0358] The gas turbine engine of any preceding clause, further comprising: a power gearbox, wherein the drive turbine shaft is driven by the turbomachine across the power gearbox.

[0359] The gas turbine engine of any preceding clause, wherein the gas turbine engine is a turboshaft engine.

[0360] A gas turbine engine comprising: a turbomachine comprising a compressor section, a combustion section, and a turbine section arranged in serial flow order, the compressor section having a high pressure compressor defining a high pressure compressor exit area ($A_{HPCExit}$) in square inches and the turbine section having a drive turbine defining a drive turbine exit area (A_{DTExit}) in square inches, the turbomachine further comprising a drive turbine shaft coupled to the drive turbine and defining an overall pressure ratio greater than 14:1 and less than or equal to 22:1; and wherein the gas turbine engine defines a maximum exhaust gas temperature (EGT) greater than 600 degrees Celsius and less than 1000 degrees Celsius, an output power of at least 550 horsepower and up to 2,000 horsepower when operated at a rated speed, a maximum drive turbine shaft torque (T_{OUT}) in Newton meters, and a corrected specific power (CSP) in Newtons squared times degrees Celsius over meters squared, wherein CSP is greater than 3.3 and less than 101 and is determined as follows:

$$\left(\frac{T_{OUT}}{\sqrt{A_{DTExit}}}\right)^2 * \frac{EGT}{A_{HPCExit}} * 10^{-11}.$$

[0361] The gas turbine engine of any preceding clause, wherein the turbomachine defines an overall pressure ratio greater than 15:1 and less than or equal to 20:1.

[0362] The gas turbine engine of any preceding clause, wherein the turbomachine comprises a stage of variable inlet guide vanes upstream of the compressor section and a stage of variable stator vanes within the compressor section.

[0363] The gas turbine engine of any preceding clause, wherein the turbine section further comprises a high pressure turbine having a first stage of high pressure turbine rotor blades and a second stage of high pressure turbine rotor blades, wherein the first and second stages of high pressure turbine rotor blades each include air cooled high pressure turbine rotor blades.

[0364] The gas turbine engine of any preceding clause, wherein the drive turbine is a low pressure turbine comprising three stages of low pressure turbine rotor blades.

[0365] The gas turbine engine of any preceding clause, wherein the compressor section includes an airflow of less than 10.5 pounds per second therethrough when the gas turbine engine is operated at a takeoff power level.

[0366] The gas turbine engine of any preceding clause, wherein the gas turbine engine defines a maximum exhaust gas temperature (EGT) greater than 700 degrees Celsius and less than 900 degrees Celsius, and wherein CSP is greater than or equal to 4 and less than or equal to 69.

[0367] A method of operating a gas turbine engine, comprising: operating the gas turbine engine at a takeoff power level, wherein operating the gas turbine engine at the takeoff power level comprises driving a propeller of a propeller assembly across a propeller shaft of the propeller assembly, the gas turbine engine further comprising a turbomachine with a high pressure compressor defining a high pressure compressor exit area ($A_{HPCExit}$) in square inches and a drive turbine defining a drive turbine exit area (A_{DTExit}) in square inches, the gas turbine engine defining a maximum exhaust gas temperature (EGT) in degrees Celsius, a maximum drive turbine shaft torque (T_{OUT}) in Newton meters, and a corrected specific power in Newtons squared times degrees Celsius over meters squared; wherein the corrected specific power (CSP) is determined as follows:

$$\left(\frac{T_{OUT}}{\sqrt{A_{DTExit}}}\right)^2 * \frac{EGT}{A_{HPCExit}} * 10^{-11};$$

wherein CSP is greater than $0.0001194 \times EGT^2 - 0.103 \times EGT + 22.14$ and less than $0.0003294 \times EGT^2 - 0.3061 \times EGT + 77.91$; and wherein EGT is greater than 525 degrees Celsius and less than 1250 degrees Celsius.

[0368] A gas turbine engine comprising: a turbomachine comprising a compressor section, a combustion section, and a turbine section arranged in serial flow order, the compressor section having a high pressure compressor defining a high pressure compressor exit area ($A_{HPCExit}$) in square inches and the turbine section having a drive turbine defining a drive turbine exit area (A_{DTExit}) in square inches, the turbomachine further comprising a drive turbine shaft coupled to the drive turbine; wherein the gas turbine engine defines a maximum exhaust gas temperature (EGT) in degrees Celsius, a maximum drive turbine shaft torque (T_{OUT}) in Newton meters, and a corrected specific power (CSP) in Newtons squared times degrees Celsius over meters squared, wherein the corrected specific power is determined as follows:

$$\left(\frac{T_{OUT}}{\sqrt{A_{DTExit}}}\right)^2 * \frac{EGT}{A_{HPCExit}} * 10^{-11};$$

wherein CSP is greater than $0.0001194 \times EGT^2 - 0.103 \times EGT + 22.14$ and less than $0.0003294 \times EGT^2 - 0.306 \times EGT + 77.91$; wherein EGT is greater than 525 degrees Celsius and less than 1250 degrees Celsius; and wherein the compressor section comprises a centrifugal compressor stage having an impeller and a deswirler assembly.

[0369] The gas turbine engine of any preceding clause, further including a service tube, and wherein the deswirler assembly includes: an outer portion with an inner wall and an outer wall defining a portion of an air flowpath; and a deswirler vane disposed in the air flowpath and extending between the inner and outer walls, wherein the service tube extends through the deswirler vane.

[0370] The gas turbine engine of any preceding clause, further including: a bearing to rotatably support the drive turbine shaft; and a sump housing surrounding at least a portion of the drive turbine shaft and the bearing and defining a sump with oil, wherein the service tube fluidly couples the sump to an exterior of the gas turbine engine.

[0371] The gas turbine engine of any preceding clause, wherein the deswirler assembly includes a first set of deswirler vanes and a second set of deswirler vanes, the second set of deswirler vanes being thicker than the first set of deswirler vanes, the second set of deswirler vanes having hollow interiors to accommodate service tubes.

[0372] The gas turbine engine of any preceding clause, wherein one of the second set of deswirler vanes is disposed between two of the first set of deswirler vanes.

[0373] The gas turbine engine of any preceding clause, wherein the deswirler vane is airfoil shaped.

[0374] The gas turbine engine of any preceding clause, further including a heat shield disposed around at least a portion of the service tube.

[0375] The gas turbine engine of any preceding clause, wherein the heat shield is separated from the service tube by an air gap.

[0376] A gas turbine engine comprising: a turbomachine comprising a compressor section, a combustion section, and a turbine section arranged in serial flow order, the compressor section having a high pressure compressor defining a high pressure compressor exit area ($A_{HPCExit}$) in square inches and the turbine section having a drive turbine defining a drive turbine exit area (A_{DTExit}) in square inches, the turbomachine further comprising a drive turbine shaft coupled to the drive turbine and defining an overall pressure ratio greater than 14:1 and less than or equal to 22:1; and wherein the gas turbine engine defines a maximum exhaust gas temperature (EGT) greater than 600 degrees Celsius and less than 1000 degrees Celsius, an output power of at least 550 horsepower and up to 2,000 horsepower when operated at a rated speed, a maximum drive turbine shaft torque (T_{OUT}) in Newton meters, and a corrected specific power

(CSP) in Newtons squared times degrees Celsius over meters squared, wherein CSP is greater than 3.3 and less than 101 and is determined as follows:

$$\left(\frac{T_{OUT}}{\sqrt{A_{DTExit}}}\right)^2 * \frac{EGT}{A_{HPCExit}} * 10^{-11};$$

and

wherein the compressor section comprises a centrifugal compressor stage having an impeller and a deswirler assembly.

[0377] The gas turbine engine of claim **9**, further including a service tube, and wherein the deswirler assembly includes: an outer portion with an inner wall and an outer wall defining a portion of an air flowpath; and a deswirler vane disposed in the air flowpath and extending between the inner and outer walls, wherein the service tube extends through the deswirler vane.

[0378] The gas turbine engine of any preceding clause, further including: a bearing to rotatably support the drive turbine shaft; and a sump housing surrounding at least a portion of the drive turbine shaft and the bearing and defining a sump with oil, wherein the service tube fluidly couples the sump to an exterior of the gas turbine engine.

[0379] The gas turbine engine of any preceding clause, wherein the deswirler assembly includes a first set of deswirler vanes and a second set of deswirler vanes, the second set of deswirler vanes being thicker than the first set of deswirler vanes, the second set of deswirler vanes having hollow interiors to accommodate service tubes.

[0380] The gas turbine engine of any preceding clause, wherein one of the second set of deswirler vanes is disposed between two of the first set of deswirler vanes.

[0381] The gas turbine engine of any preceding clause, wherein the deswirler vane is airfoil shaped.

[0382] The gas turbine engine of any preceding clause, further including a heat shield disposed around at least a portion of the service tube.

[0383] The gas turbine engine of any preceding clause, wherein the heat shield is separated from the service tube by an air gap.

[0384] A method of operating a gas turbine engine, comprising: operating the gas turbine engine at a takeoff power level, wherein operating the gas turbine engine at the takeoff power level comprises driving a propeller of a propeller assembly across a propeller shaft of the propeller assembly, the gas turbine engine further comprising a turbomachine with a high pressure compressor defining a high pressure compressor exit area ($A_{HPCExit}$) in square inches and a drive turbine defining a drive turbine exit area (A_{DTExit}) in square inches, the gas turbine engine defining a maximum exhaust gas temperature (EGT) in degrees Celsius, a maximum drive turbine shaft torque (T_{OUT}) in Newton meters, and a corrected specific power in Newtons squared times degrees Celsius over meters squared; wherein the corrected specific power (CSP) is determined as follows:

$$\left(\frac{T_{OUT}}{\sqrt{A_{DTExit}}}\right)^2 * \frac{EGT}{A_{HPCExit}} * 10^{-11};$$

wherein CSP is greater than $0.0001194 \times EGT^2 - 0.103 \times EGT + 22.14$ and less than $0.0003294 \times EGT^2 - 0.3061 \times EGT + 77.91$; wherein EGT is greater than 525 degrees Celsius and less than 1250 degrees Celsius; and wherein the gas turbine engine comprises a centrifugal compressor stage having an impeller and a deswirler assembly.

[0385] The method of any preceding clause, wherein the gas turbine engine includes a service tube, and wherein the deswirler assembly includes: an outer portion with an inner wall and an outer wall defining a portion of an air flowpath; and a deswirler vane disposed in the air flowpath and extending between the inner and outer walls, wherein the service tube extends through the deswirler vane. The method of any preceding clause, wherein the gas turbine engine

[0386] includes: a bearing to rotatably support the drive turbine shaft; and a sump housing surrounding at least a portion of the drive turbine shaft and the bearing and defining a sump with oil, wherein the service tube fluidly couples the sump to an exterior of the gas turbine engine.

[0387] The method of any preceding clause, wherein the gas turbine engine includes a heat shield disposed around at least a portion of the service tube.

We claim:

1. A gas turbine engine comprising:

a turbomachine comprising a compressor section, a combustion section, and a turbine section arranged in serial flow order, the compressor section having a high pressure compressor defining a high pressure compressor exit area ($A_{HPCExit}$) in square inches and the turbine section having a drive turbine defining a drive turbine exit area (A_{DTExit}) in square inches, the turbomachine further comprising a drive turbine shaft coupled to the drive turbine;

wherein the gas turbine engine defines a maximum exhaust gas temperature (EGT) in degrees Celsius, a maximum drive turbine shaft torque (T_{OUT}) in Newton meters, and a corrected specific power (CSP) in Newtons squared times degrees Celsius over meters squared, wherein the corrected specific power is determined as follows:

$$\left(\frac{T_{OUT}}{\sqrt{A_{DTExit}}}\right)^2 * \frac{EGT}{A_{HPCExit}} * 10^{-11};$$

wherein CSP is greater than $0.0001194 \times EGT^2 - 0.103 \times EGT + 22.14$ and less than $0.0003294 \times EGT^2 - 0.306 \times EGT + 77.91$;

wherein EGT is greater than 525 degrees Celsius and less than 1250 degrees Celsius; and

wherein the compressor section comprises a centrifugal compressor stage having an impeller and a deswirler assembly.

2. The gas turbine engine of claim **1**, further including a service tube, and wherein the deswirler assembly includes:

an outer portion with an inner wall and an outer wall defining a portion of an air flowpath; and

a deswirler vane disposed in the air flowpath and extending between the inner and outer walls, wherein the service tube extends through the deswirler vane.

3. The gas turbine engine of claim **2**, further including:

a bearing to rotatably support the drive turbine shaft; and

a sump housing surrounding at least a portion of the drive turbine shaft and the bearing and defining a sump with oil, wherein the service tube fluidly couples the sump to an exterior of the gas turbine engine.

4. The gas turbine engine of claim **2**, wherein the deswirler assembly includes a first set of deswirler vanes and a second set of deswirler vanes, the second set of deswirler vanes being thicker than the first set of deswirler vanes, the second set of deswirler vanes having hollow interiors to accommodate service tubes.

5. The gas turbine engine of claim **4**, wherein one of the second set of deswirler vanes is disposed between two of the first set of deswirler vanes.

6. The gas turbine engine of claim **2**, wherein the deswirler vane is airfoil shaped.

7. The gas turbine engine of claim **2**, further including a heat shield disposed around at least a portion of the service tube.

8. The gas turbine engine of claim **7**, wherein the heat shield is separated from the service tube by an air gap.

9. A gas turbine engine comprising:

a turbomachine comprising a compressor section, a combustion section, and a turbine section arranged in serial flow order, the compressor section having a high pressure compressor defining a high pressure compressor exit area ($A_{HPCExit}$) in square inches and the turbine section having a drive turbine defining a drive turbine exit area (A_{DTExit}) in square inches, the turbomachine further comprising a drive turbine shaft coupled to the drive turbine and defining an overall pressure ratio greater than 14:1 and less than or equal to 22:1;

wherein the gas turbine engine defines a maximum exhaust gas temperature (EGT) greater than 600 degrees Celsius and less than 1000 degrees Celsius, an output power of at least 550 horsepower and up to 2,000 horsepower when operated at a rated speed, a maximum drive turbine shaft torque (T_{OUT}) in Newton meters, and a corrected specific power (CSP) in Newtons squared times degrees Celsius over meters squared, wherein CSP is greater than 3.3 and less than 101 and is determined as follows:

$$\left(\frac{T_{OUT}}{\sqrt{A_{DTExit}}}\right)^2 * \frac{EGT}{A_{HPCExit}} * 10^{-11};$$

and

wherein the compressor section comprises a centrifugal compressor stage having an impeller and a deswirler assembly.

10. The gas turbine engine of claim **9**, further including a service tube, and wherein the deswirler assembly includes:

an outer portion with an inner wall and an outer wall defining a portion of an air flowpath; and

a deswirler vane disposed in the air flowpath and extending between the inner and outer walls, wherein the service tube extends through the deswirler vane.

11. The gas turbine engine of claim **10**, further including:

a bearing to rotatably support the drive turbine shaft; and

a sump housing surrounding at least a portion of the drive turbine shaft and the bearing and defining a sump with oil, wherein the service tube fluidly couples the sump to an exterior of the gas turbine engine.

12. The gas turbine engine of claim **10**, wherein the deswirler assembly includes a first set of deswirler vanes and a second set of deswirler vanes, the second set of deswirler vanes being thicker than the first set of deswirler vanes, the second set of deswirler vanes having hollow interiors to accommodate service tubes.

13. The gas turbine engine of claim **12**, wherein one of the second set of deswirler vanes is disposed between two of the first set of deswirler vanes.

14. The gas turbine engine of claim **10**, wherein the deswirler vane is airfoil shaped.

15. The gas turbine engine of claim **10**, further including a heat shield disposed around at least a portion of the service tube.

16. The gas turbine engine of claim **15**, wherein the heat shield is separated from the service tube by an air gap.

17. A method of operating a gas turbine engine, comprising:

operating the gas turbine engine at a takeoff power level, wherein operating the gas turbine engine at the takeoff power level comprises driving a propeller of a propeller assembly across a propeller shaft of the propeller assembly, the gas turbine engine further comprising a turbomachine with a high pressure compressor defining a high pressure compressor exit area ($A_{HPCExit}$) in square inches and a drive turbine defining a drive turbine exit area (A_{DTExit}) in square inches, the gas turbine engine defining a maximum exhaust gas temperature (EGT) in degrees Celsius, a maximum drive turbine shaft torque (T_{OUT}) in Newton meters, and a corrected specific power in Newtons squared times degrees Celsius over meters squared;

wherein the corrected specific power (CSP) is determined as follows:

$$\left(\frac{T_{OUT}}{\sqrt{A_{DTExit}}}\right)^2 * \frac{EGT}{A_{HPCExit}} * 10^{-11};$$

wherein CSP is greater than $0.0001194 \times EGT^2 - 0.103 \times EGT + 22.14$ and less than $0.0003294 \times EGT^2 - 0.3061 \times EGT + 77.91$;

wherein EGT is greater than 525 degrees Celsius and less than 1250 degrees Celsius; and

wherein the gas turbine engine comprises a centrifugal compressor stage having an impeller and a deswirler assembly.

18. The method of claim **17**, wherein the gas turbine engine includes a service tube, and wherein the deswirler assembly includes:

an outer portion with an inner wall and an outer wall defining a portion of an air flowpath; and

a deswirler vane disposed in the air flowpath and extending between the inner and outer walls, wherein the service tube extends through the deswirler vane.

19. The method of claim **18**, wherein the gas turbine engine includes:

a bearing to rotatably support the drive turbine shaft; and

a sump housing surrounding at least a portion of the drive turbine shaft and the bearing and defining a sump with

oil, wherein the service tube fluidly couples the sump to an exterior of the gas turbine engine.

20. The method of claim **18**, wherein the gas turbine engine includes a heat shield disposed around at least a portion of the service tube.

* * * * *