US 20250257620A1

(19) United States
(12) Patent Application Publication
Fischer et al.
(10) Pub. No.: US 2025/0257620 A1
(43) Pub. Date: Aug. 14, 2025

(54) **ELECTRIC DRIVEN HYDRAULIC FRACKING OPERATION**

(71) Applicant: **Halliburton Energy Services, Inc.**, Houston, TX (US)

(72) Inventors: **John Fischer**, Hempstead, TX (US); **John J. Crosetto**, Oak Forest, IL (US); **David Kubricht**, Cypress, TX (US); **Richard Cheatham**, Houston, TX (US); **Jeffrey Pollack**, Joliet, IL (US); **Chad Lawman**, Joliet, IL (US); **David Todd**, Houston, TX (US); **Tyler Nolen**, Houston, TX (US)

(21) Appl. No.: **18/628,179**

(22) Filed: **Apr. 5, 2024**

Related U.S. Application Data

(63) Continuation of application No. 18/453,476, filed on Aug. 22, 2023, now Pat. No. 11,976,525, which is a continuation of application No. 18/100,299, filed on Jan. 23, 2023, now Pat. No. 11,739,602, which is a continuation of application No. 17/869,239, filed on Jul. 20, 2022, now Pat. No. 11,560,764, which is a continuation of application No. 17/670,885, filed on Feb. 14, 2022, now Pat. No. 11,434,709, which is a continuation of application No. 17/498,667, filed on Oct. 11, 2021, now Pat. No. 11,274,512, which is a continuation of application No. 17/239,877, filed on Apr. 26, 2021, now Pat. No. 11,142,972, which is a continuation of application No. 16/790,897, filed on Feb. 14, 2020, now Pat. No. 10,988,998.

(60) Provisional application No. 62/805,521, filed on Feb. 14, 2019.

Publication Classification

(51) **Int. Cl.**

F04D 13/12	(2006.01)
E21B 4/02	(2006.01)
E21B 4/04	(2006.01)
E21B 7/02	(2006.01)
E21B 21/08	(2006.01)
E21B 43/26	(2006.01)
F04B 17/03	(2006.01)
F04B 17/06	(2006.01)
F04D 13/06	(2006.01)
H02B 1/52	(2006.01)
H02B 5/00	(2006.01)
H02J 13/00	(2006.01)
H02K 7/18	(2006.01)
H02K 9/00	(2006.01)
H02P 27/04	(2016.01)
H05K 7/20	(2006.01)

(52) **U.S. Cl.**

CPC ***E21B 21/08*** (2013.01); ***E21B 4/04*** (2013.01); ***E21B 7/022*** (2013.01); ***E21B 43/2605*** (2020.05); ***E21B 43/2607*** (2020.05); ***F04B 17/03*** (2013.01); ***F04B 17/06*** (2013.01); ***F04D 13/0686*** (2013.01); ***H02B 1/52*** (2013.01); ***H02B 5/00*** (2013.01); ***H02J 13/00036*** (2020.01); ***H02K 7/18*** (2013.01); ***H02P 27/04*** (2013.01); *E21B 4/02* (2013.01); *F05B 2220/706* (2013.01); *F05B 2240/941* (2013.01); *H02K 9/00* (2013.01); *H05K 5/0213* (2013.01); *H05K 7/20918* (2013.01)

(57) **ABSTRACT**

Certain embodiments of the present application relate to a variable frequency drive (VFD) cabin for a pump configuration including a mobile trailer on which the VFD cabin is to be mounted. The VFD cabin generally includes a medium-voltage VFD and a ventilation system. In certain embodiments, the ventilation system is configured to generate an overpressure condition within the cabin to discourage the entry of dust and debris into the cabin. In certain embodiments, one or more components of the medium-voltage VFD are coupled to the floor of the cabin via a vibration damping system. In certain embodiments, the VFD cabin may be directly coupled to a chassis of the mobile trailer without an intervening suspension being provided between the VFD cabin and the chassis.

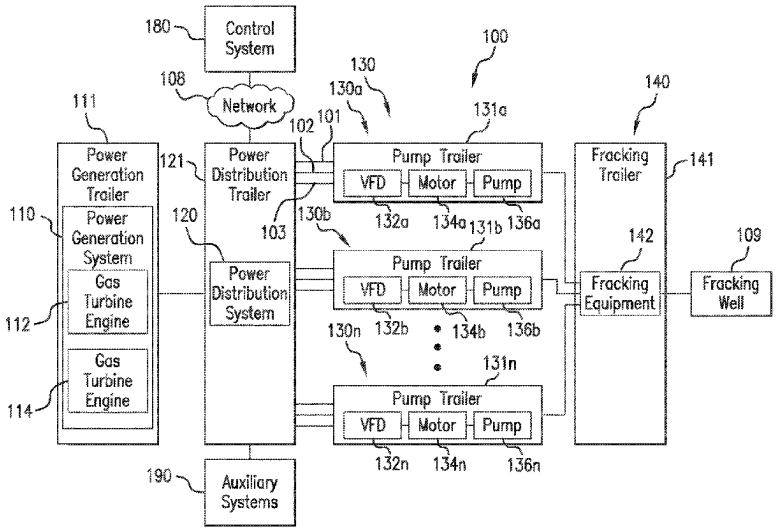

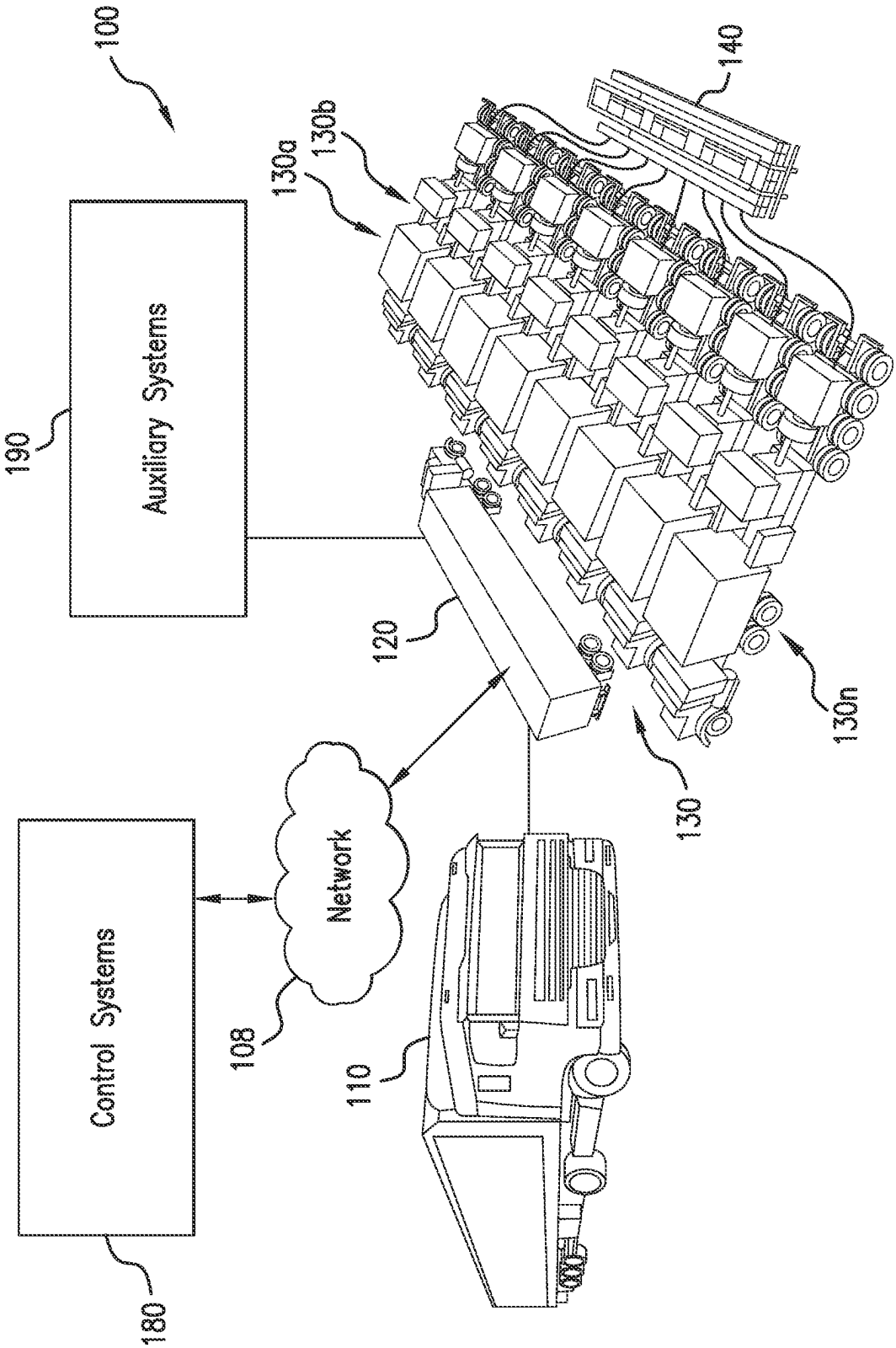
100
190
Auxiliary Systems
130a
130b
140
120
130
130n
Network
108
110
Control Systems
180

FIG. 1

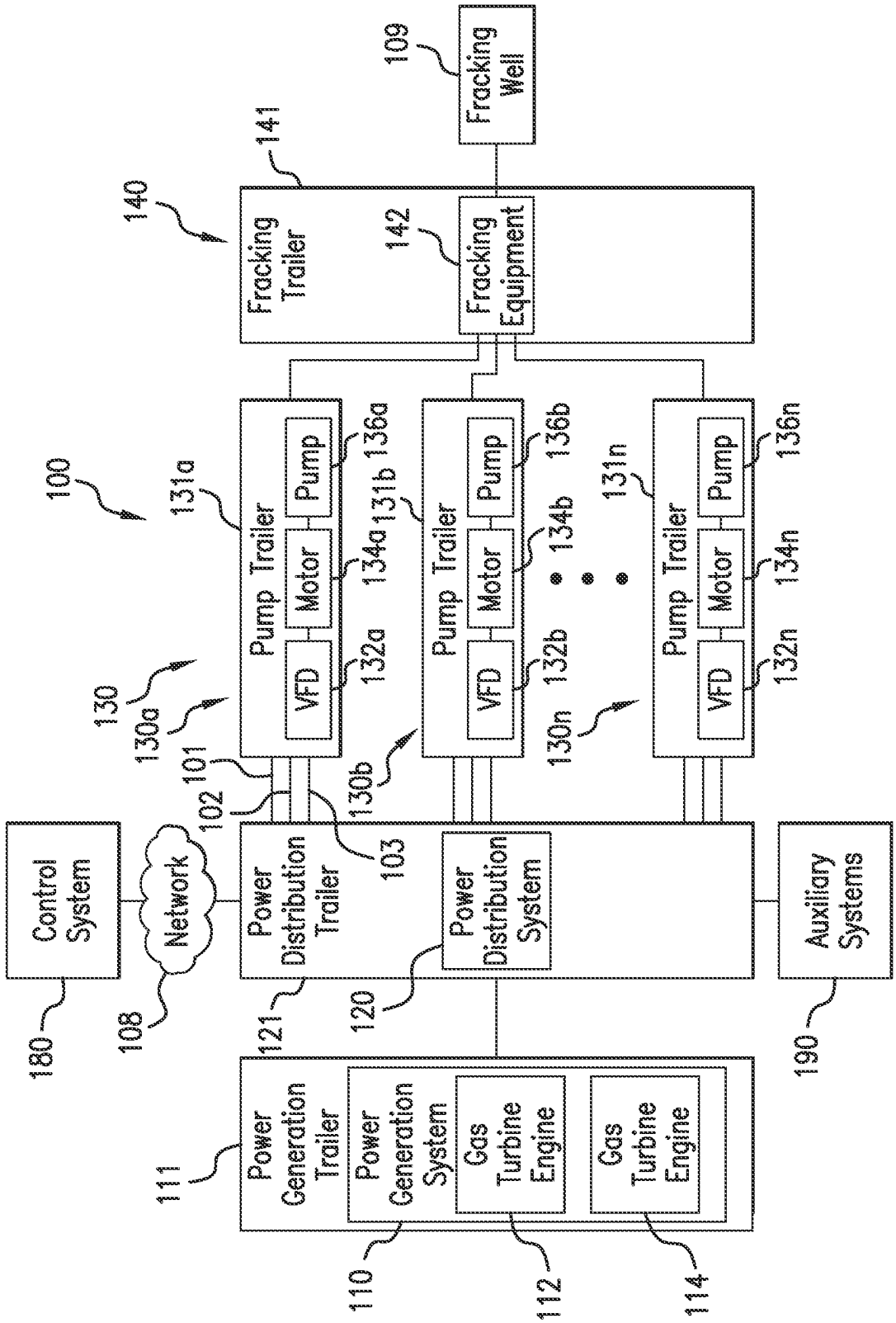
100
Control System
180
Network
108
Power Distribution Trailer
121
Power Distribution System
120
Auxiliary Systems
190
Power Generation Trailer
111
Power Generation System
Gas Turbine Engine
Gas Turbine Engine
110
112
114
101
102
103
130
130a
130b
130n
Pump Trailer
131a
VFD
132a
Motor
134a
Pump
136a
Pump Trailer
131b
VFD
132b
Motor
134b
Pump
136b
Pump Trailer
131n
VFD
132n
Motor
134n
Pump
136n
Fracking Trailer
140
141
Fracking Equipment
142
Fracking Well
109

FIG. 2

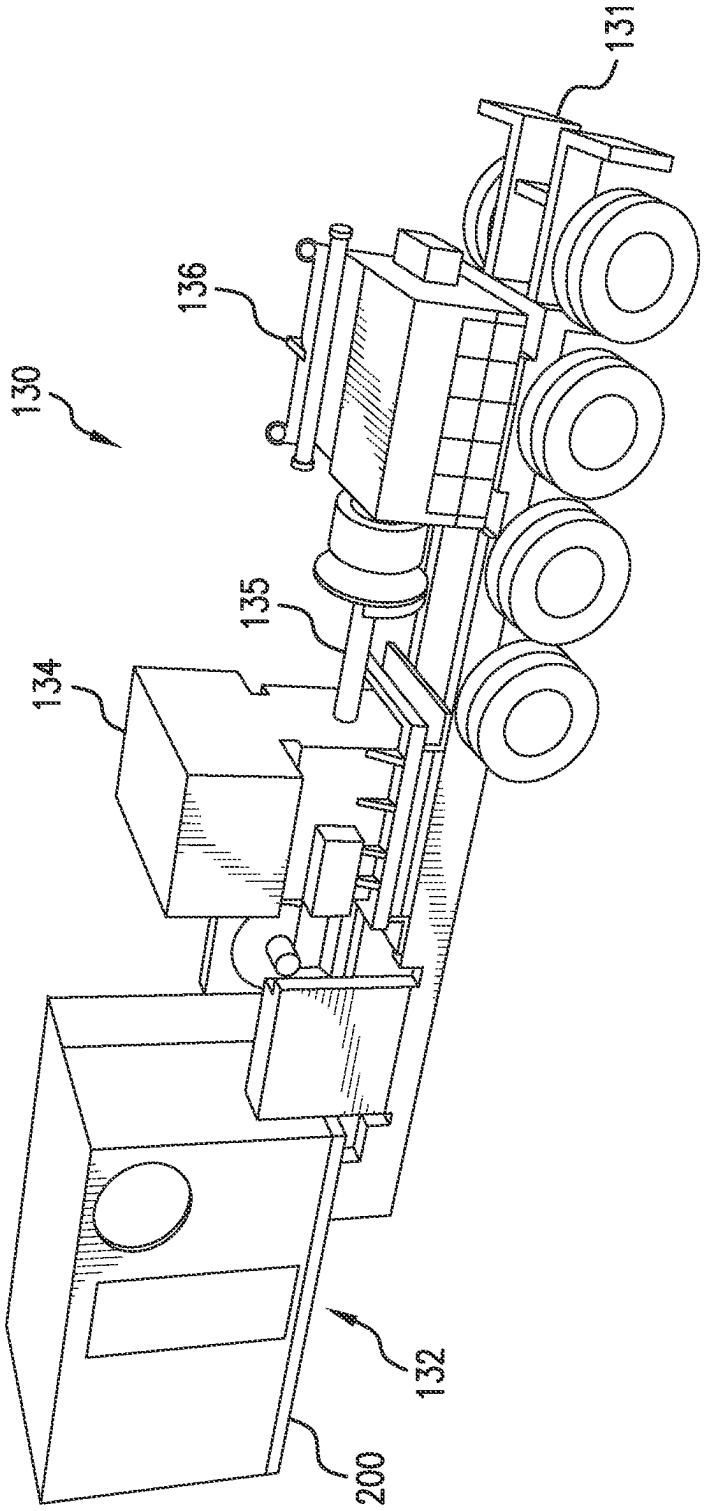

FIG. 3

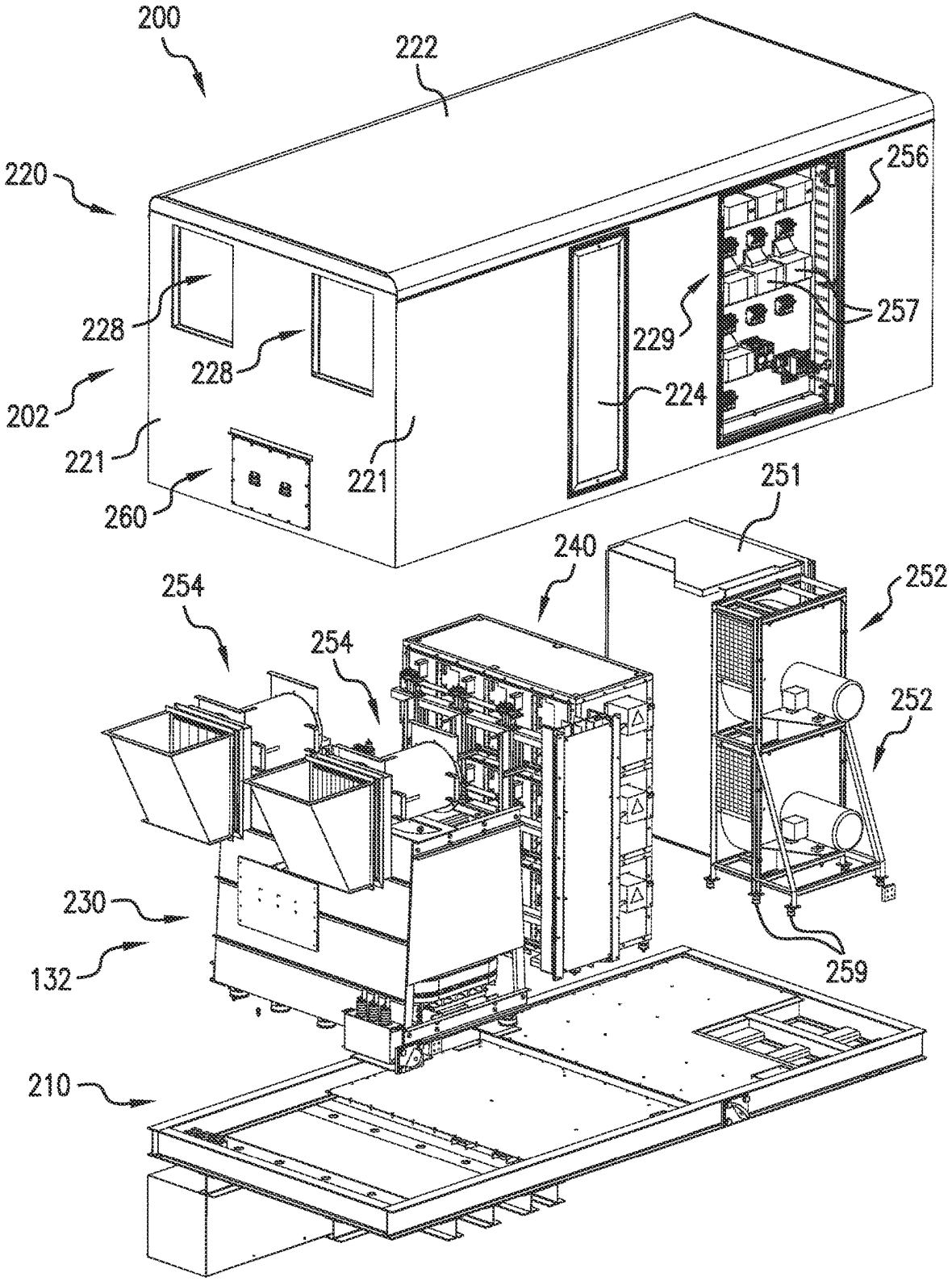
200
222
220
256
228
228
229
257
202
224
221
221
260
251
240
252
254
254
252
230
259
132
210

FIG.4

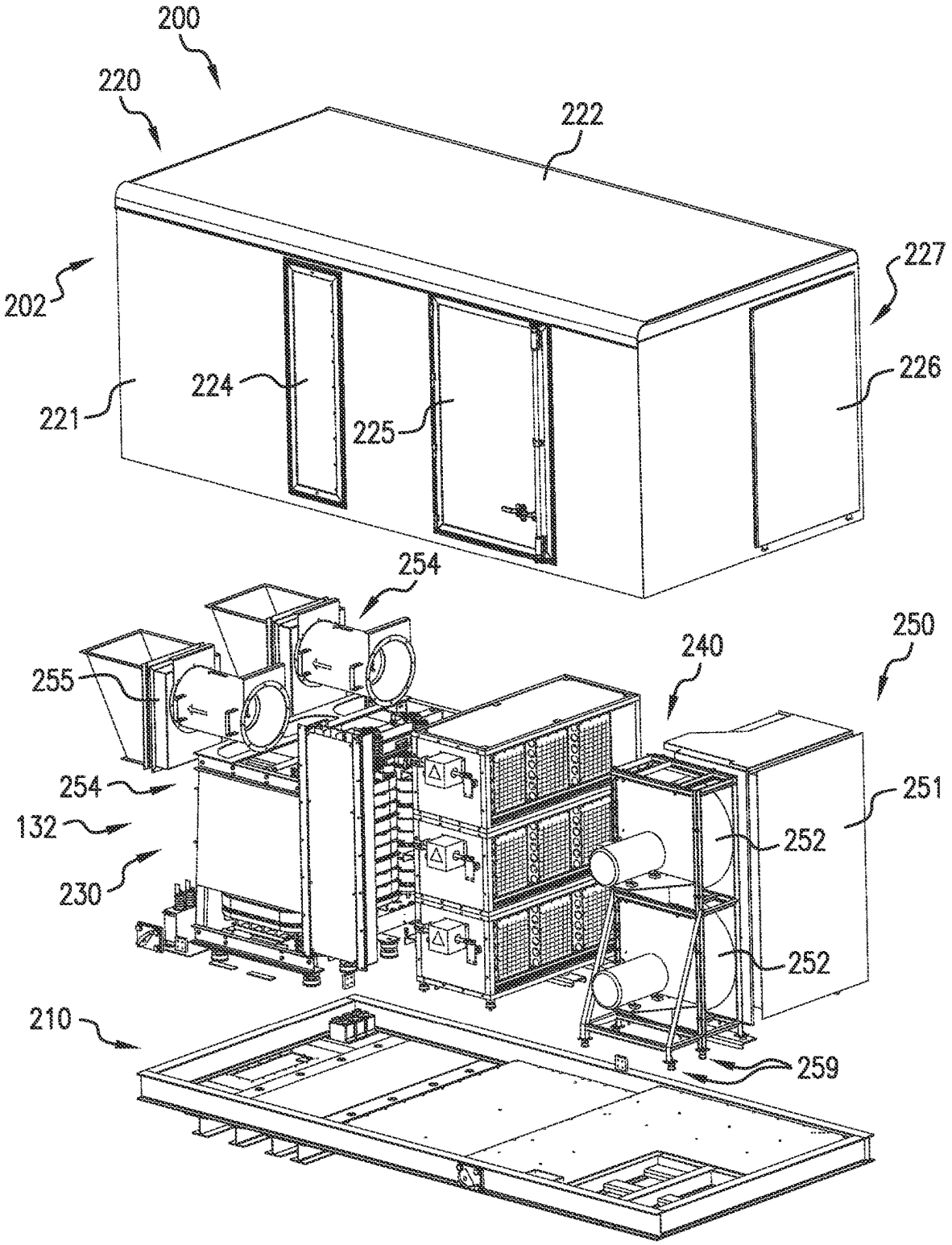
200
220
222
202
227
224
226
221
225
254
250
240
255
254
251
132
252
230
252
210
259

FIG.5

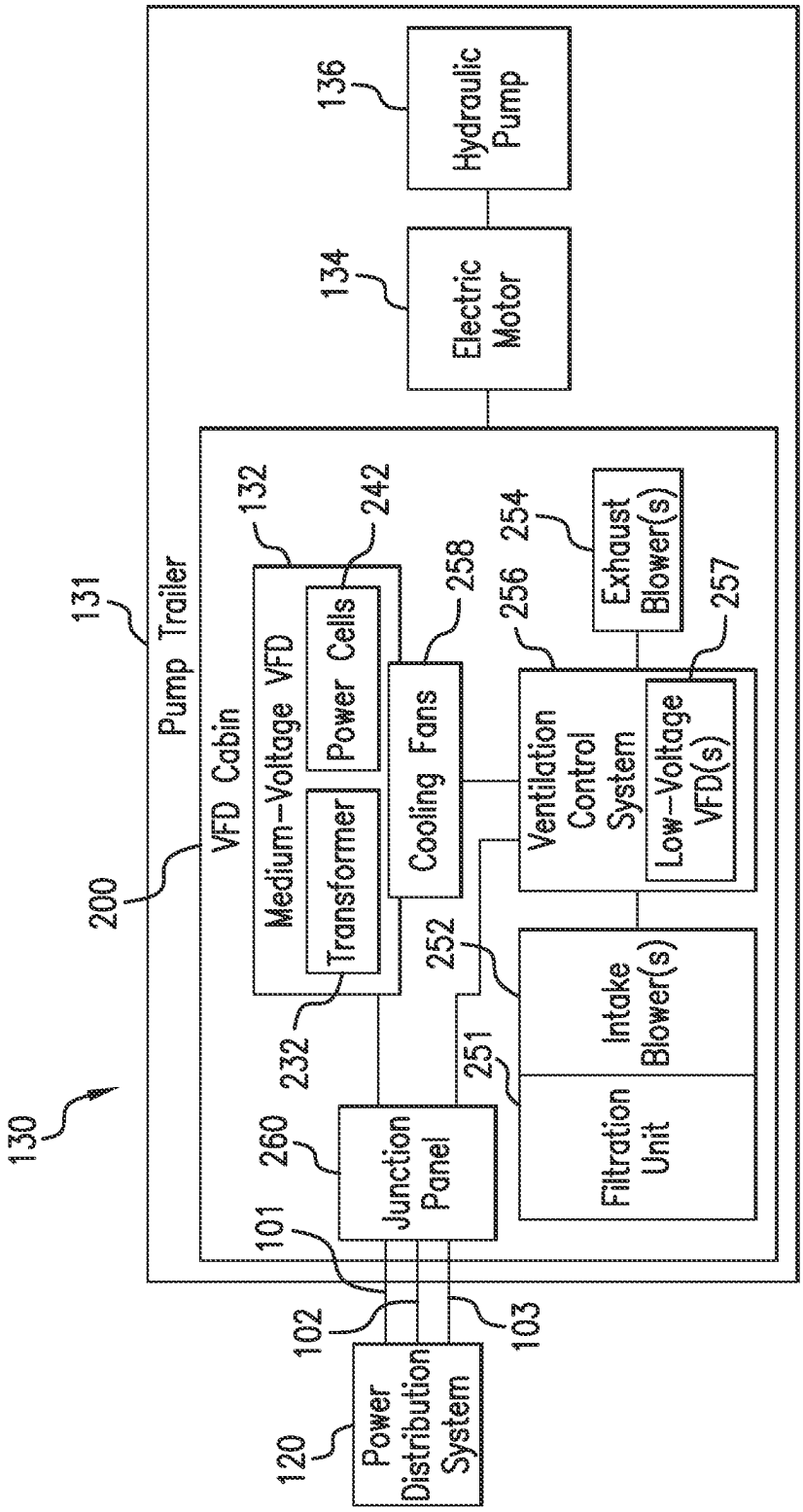
130
131
Pump Trailer
200
VFD Cabin
132
Medium-Voltage VFD
Transformer
232
Power Cells
242
Cooling Fans
258
Ventilation Control System
256
Exhaust Blower(s)
254
Low-Voltage VFD(s)
257
Intake Blower(s)
252
Filtration Unit
251
Junction Panel
260
101
102
103
Power Distribution System
120
Electric Motor
134
Hydraulic Pump
136

FIG. 6

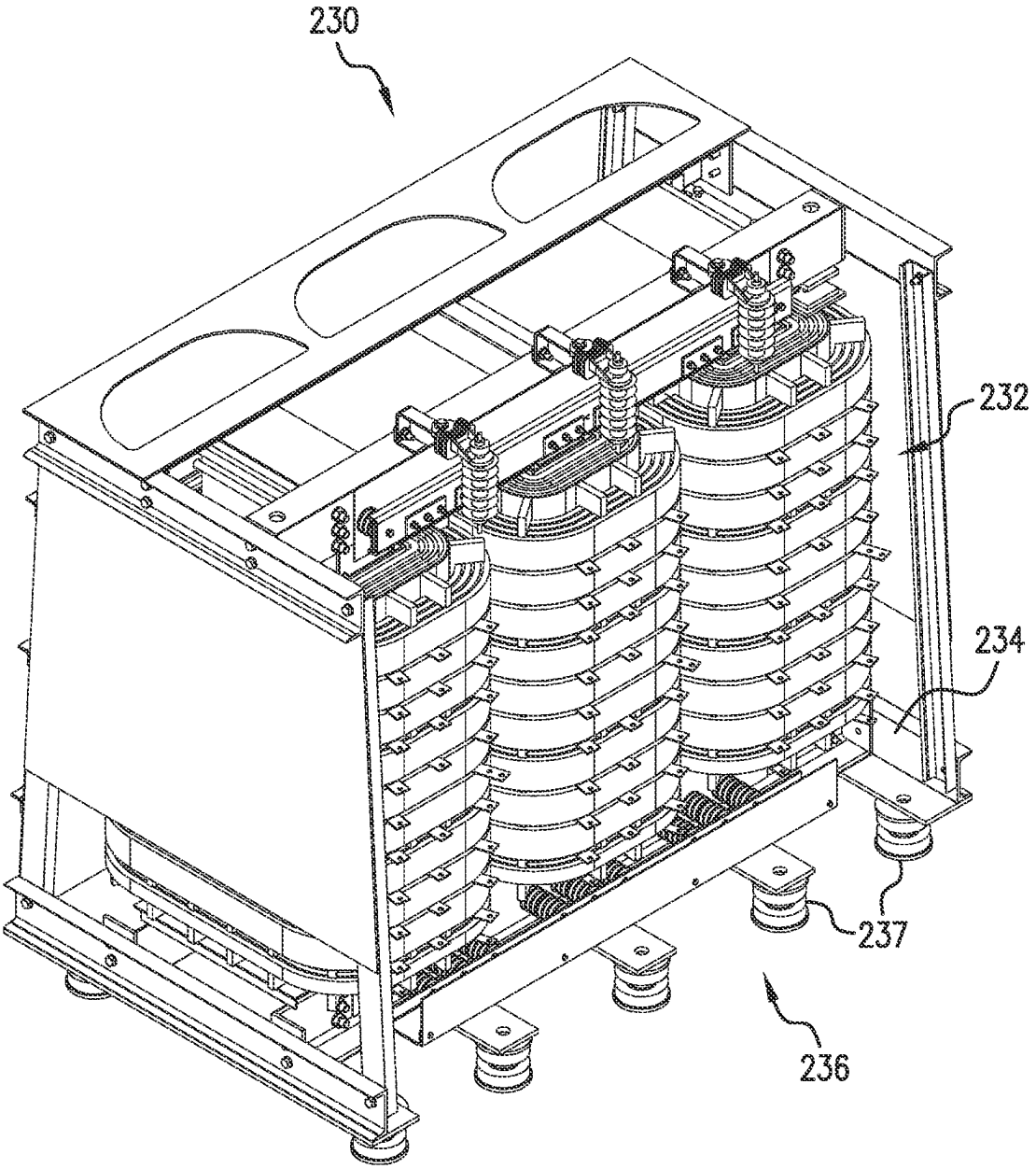

FIG. 7

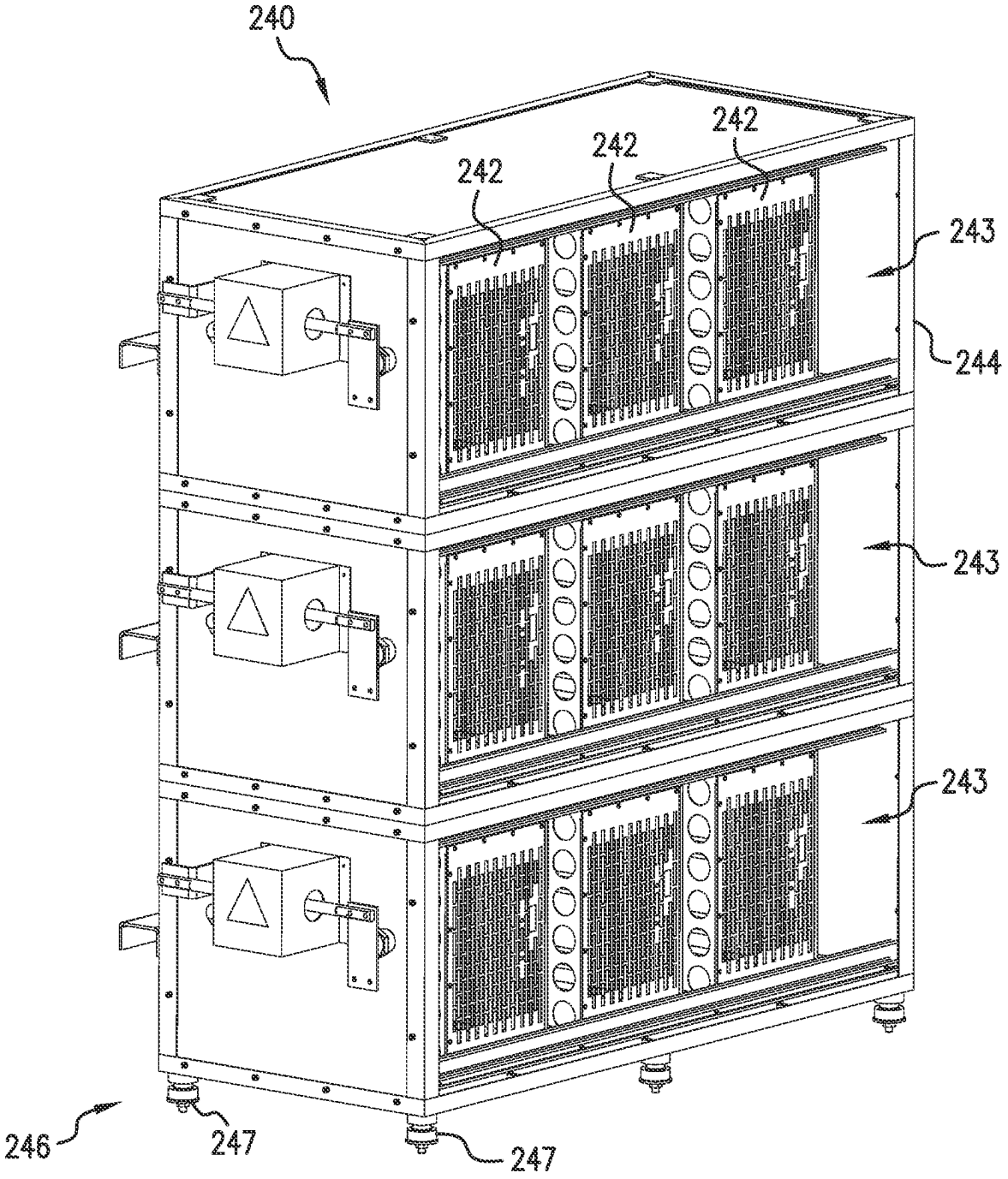

FIG.8

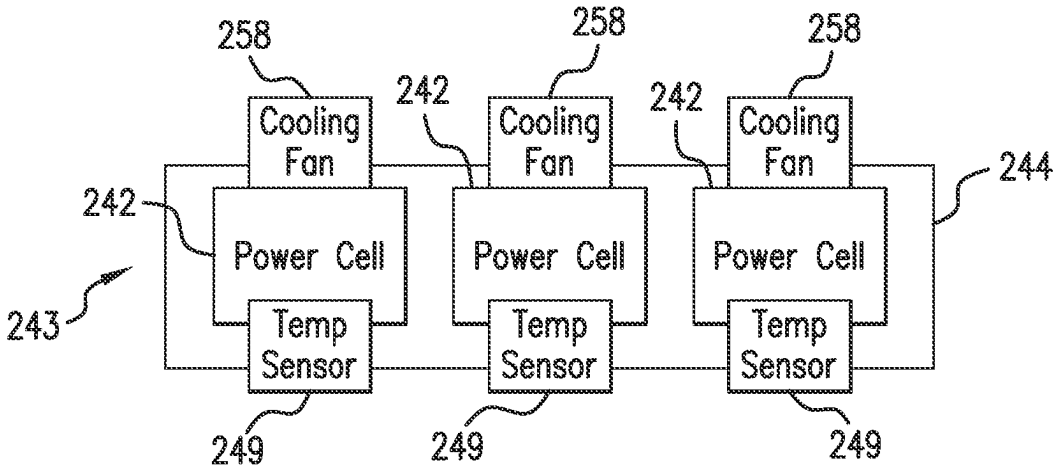
258
258
258
242
242
Cooling Fan
Cooling Fan
Cooling Fan
244
242
Power Cell
Power Cell
Power Cell
243
Temp Sensor
Temp Sensor
Temp Sensor
249
249
249

FIG.9

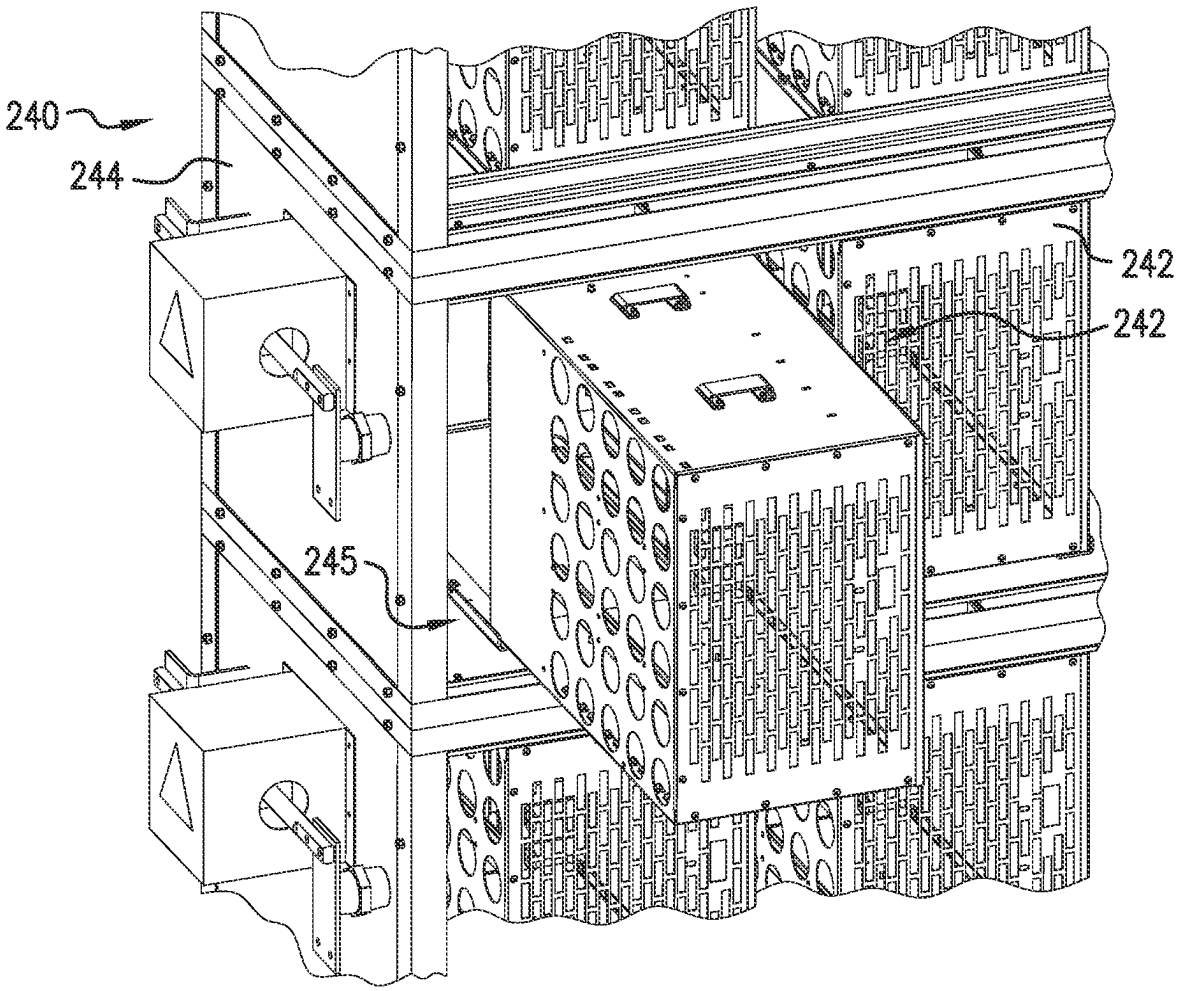
240
244
242
242
245

FIG.10

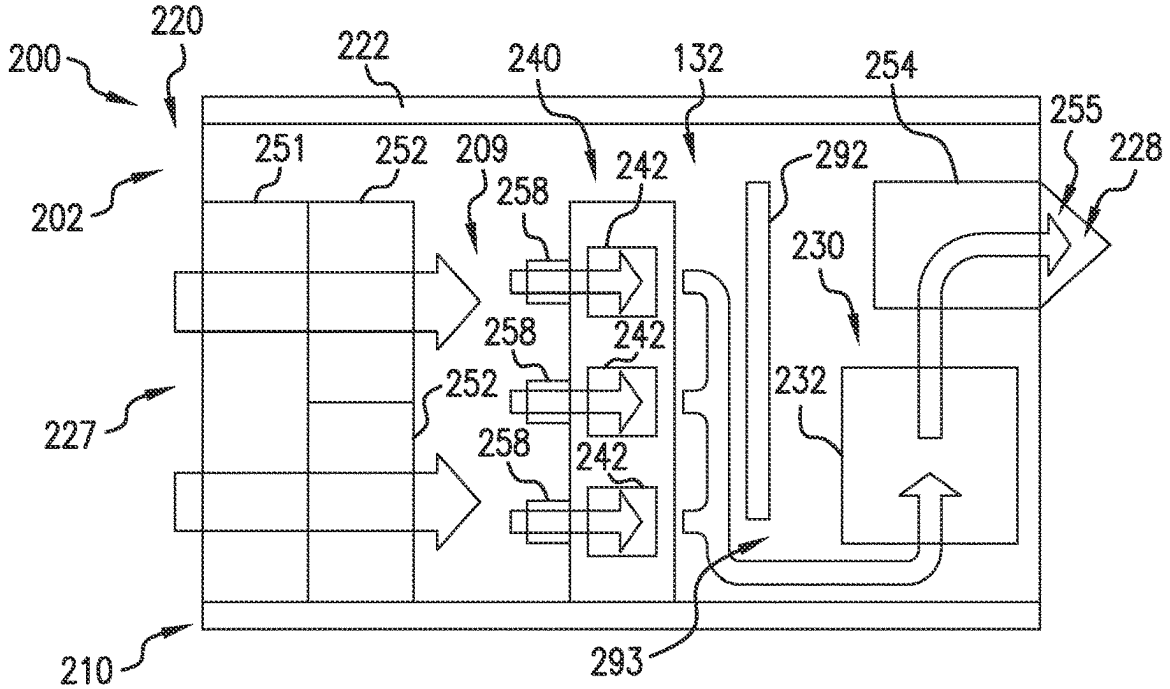
200
220
222
240
132
254
255
228
251
252
209
242
292
202
258
230
258
242
252
232
227
258
242
210
293

FIG. 11

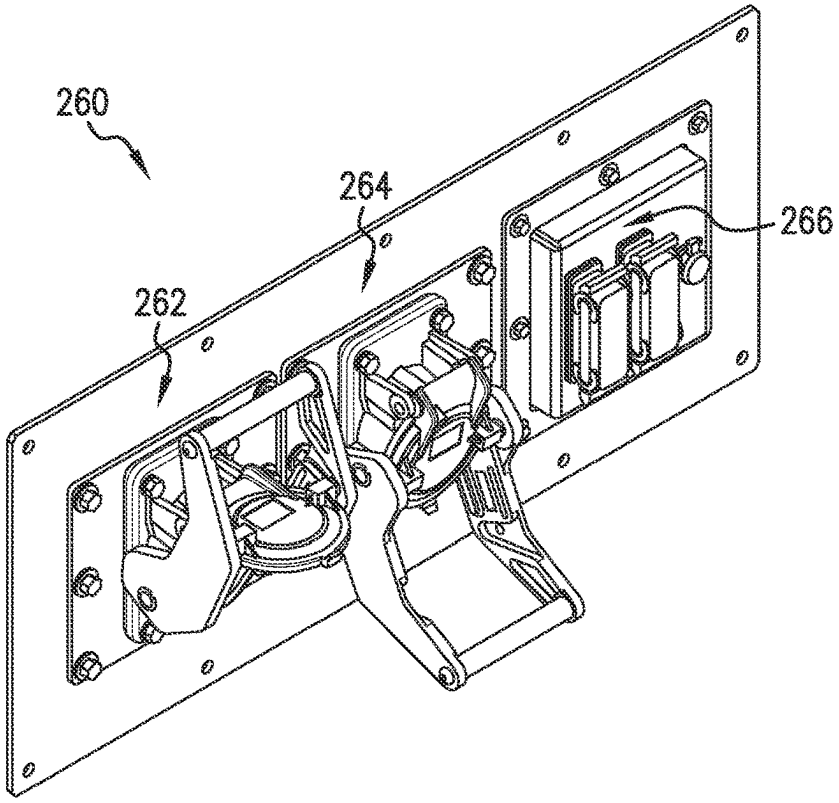
260
264
266
262

FIG. 12

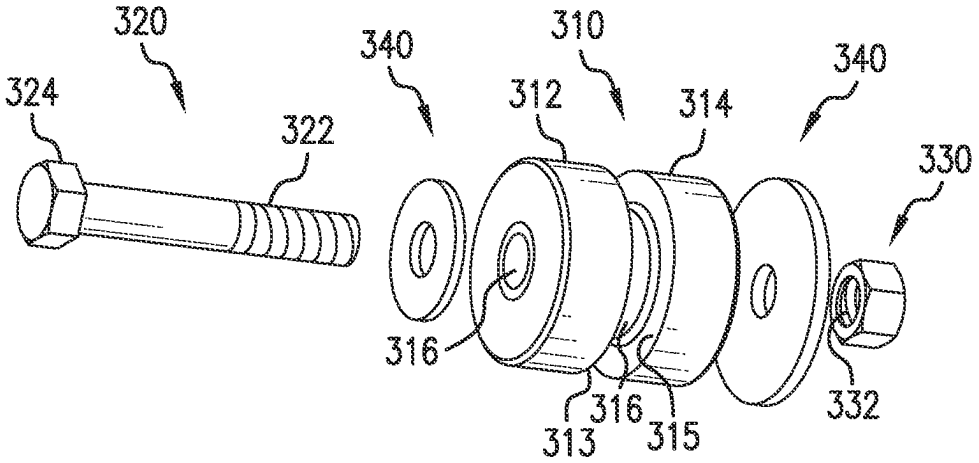
320
324
322
340
310
312
314
340
330
316
313
316
315
332

FIG. 13

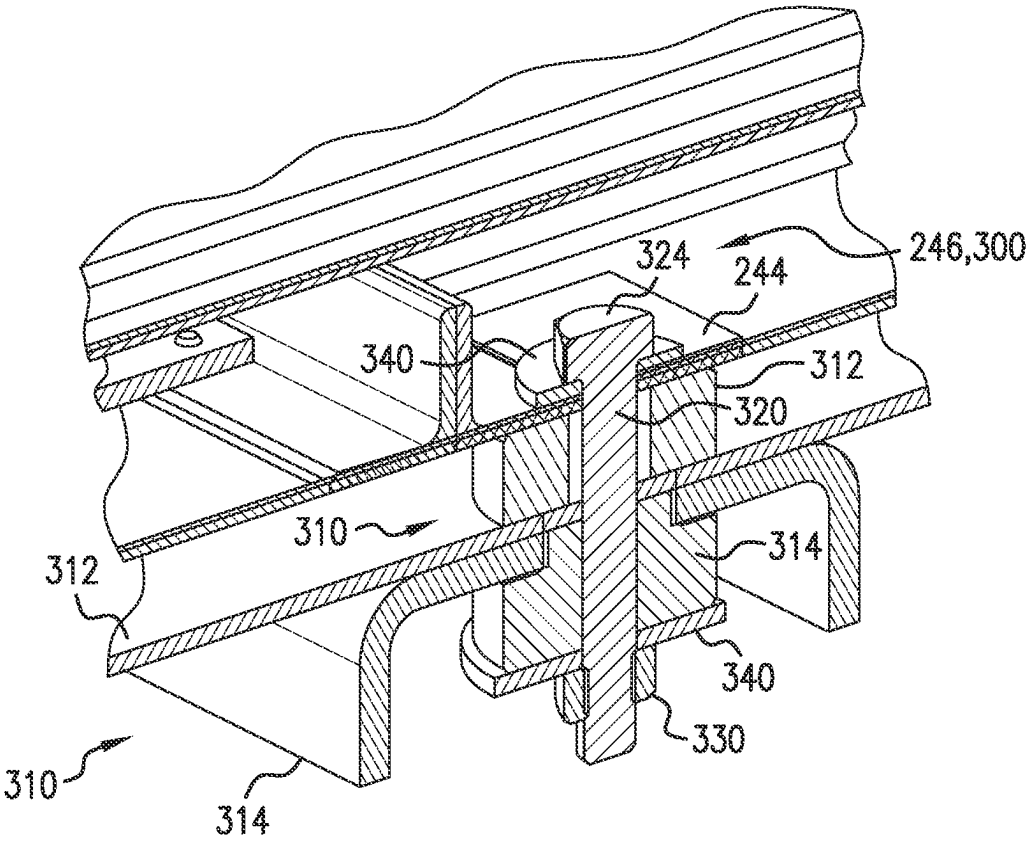
246,300
324
244
340
312
320
310
314
312
340
330
310
314

FIG. 14

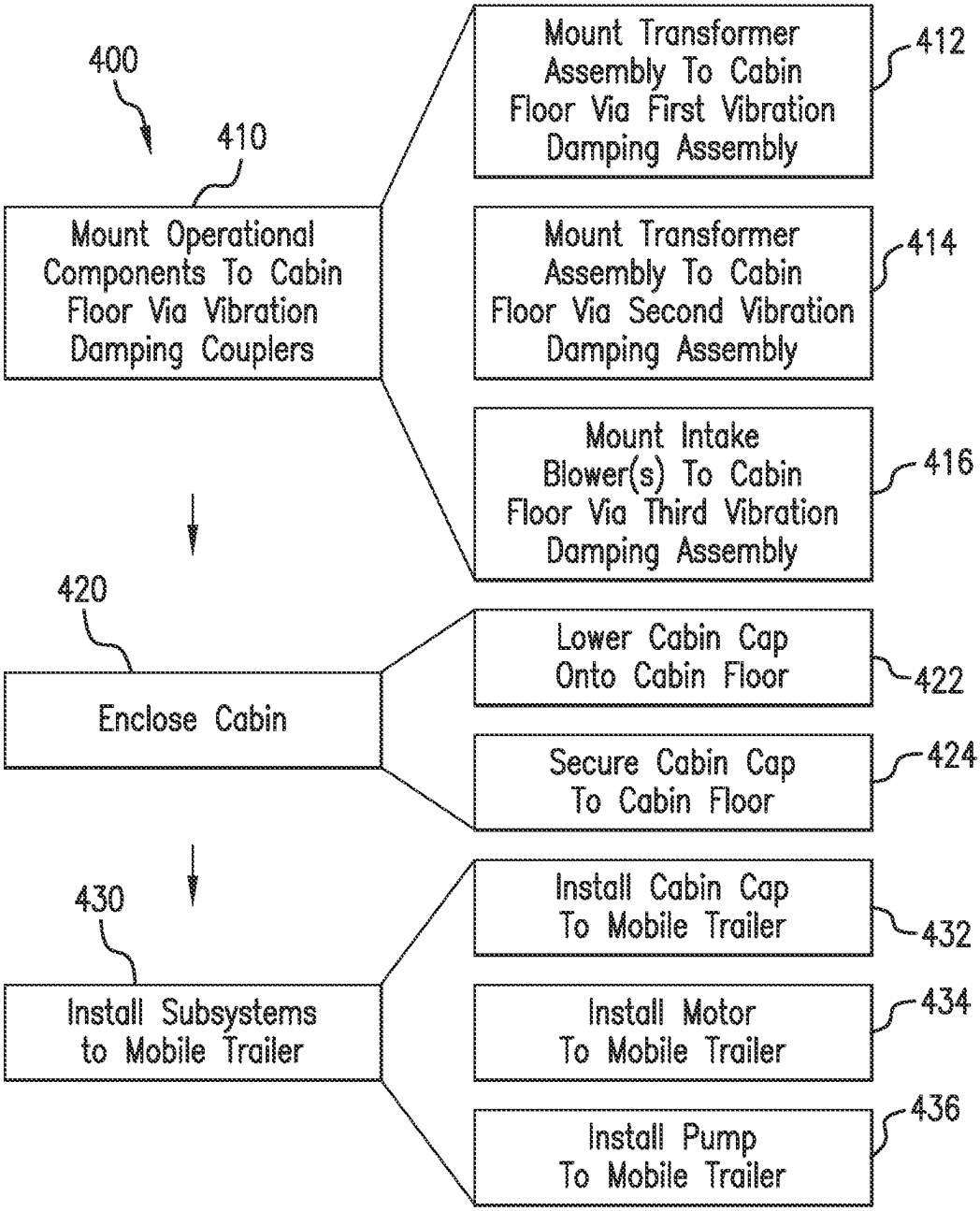
400
410
Mount Operational Components To Cabin Floor Via Vibration Damping Couplers
Mount Transformer Assembly To Cabin Floor Via First Vibration Damping Assembly
412
Mount Transformer Assembly To Cabin Floor Via Second Vibration Damping Assembly
414
Mount Intake Blower(s) To Cabin Floor Via Third Vibration Damping Assembly
416
420
Enclose Cabin
Lower Cabin Cap Onto Cabin Floor
422
Secure Cabin Cap To Cabin Floor
424
430
Install Subsystems to Mobile Trailer
Install Cabin Cap To Mobile Trailer
432
Install Motor To Mobile Trailer
434
Install Pump To Mobile Trailer
436

FIG. 15

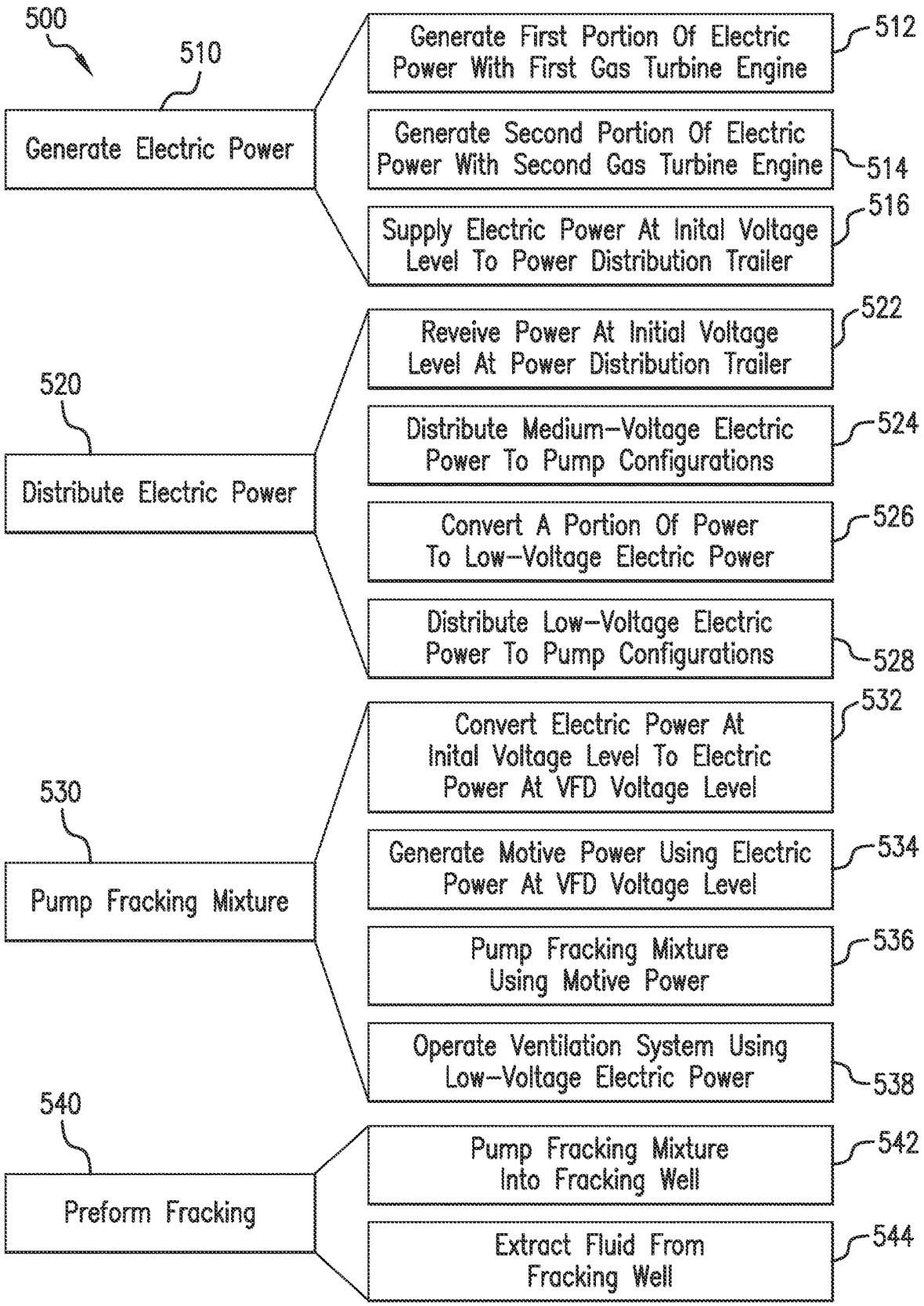
500
510
Generate Electric Power
Generate First Portion Of Electric Power With First Gas Turbine Engine
512
Generate Second Portion Of Electric Power With Second Gas Turbine Engine
514
Supply Electric Power At Inital Voltage Level To Power Distribution Trailer
516
520
Distribute Electric Power
Reveive Power At Initial Voltage Level At Power Distribution Trailer
522
Distribute Medium-Voltage Electric Power To Pump Configurations
524
Convert A Portion Of Power To Low-Voltage Electric Power
526
Distribute Low-Voltage Electric Power To Pump Configurations
528
530
Pump Fracking Mixture
Convert Electric Power At Inital Voltage Level To Electric Power At VFD Voltage Level
532
Generate Motive Power Using Electric Power At VFD Voltage Level
534
Pump Fracking Mixture Using Motive Power
536
Operate Ventilation System Using Low-Voltage Electric Power
538
540
Preform Fracking
Pump Fracking Mixture Into Fracking Well
542
Extract Fluid From Fracking Well
544

FIG.16

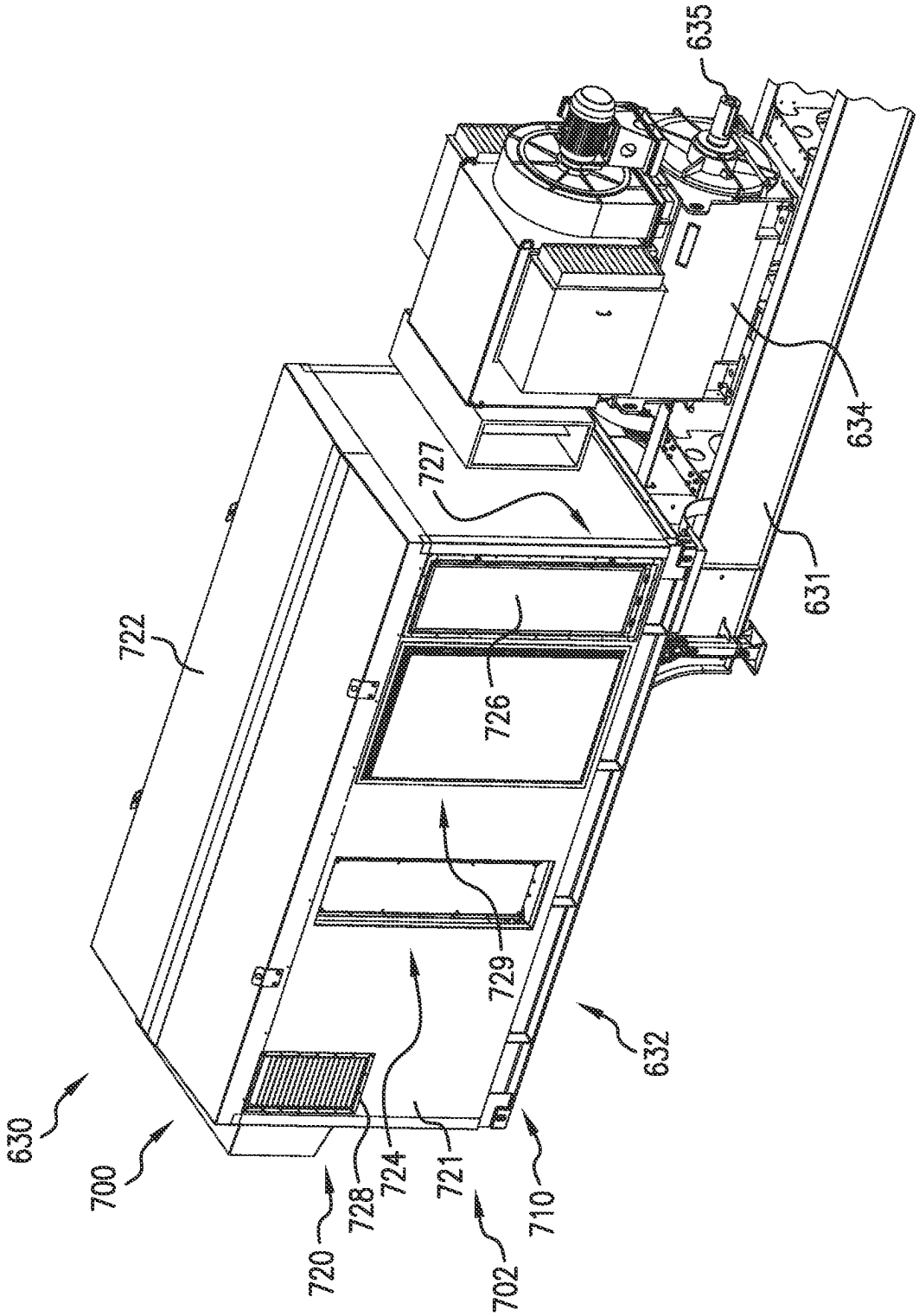

FIG. 17

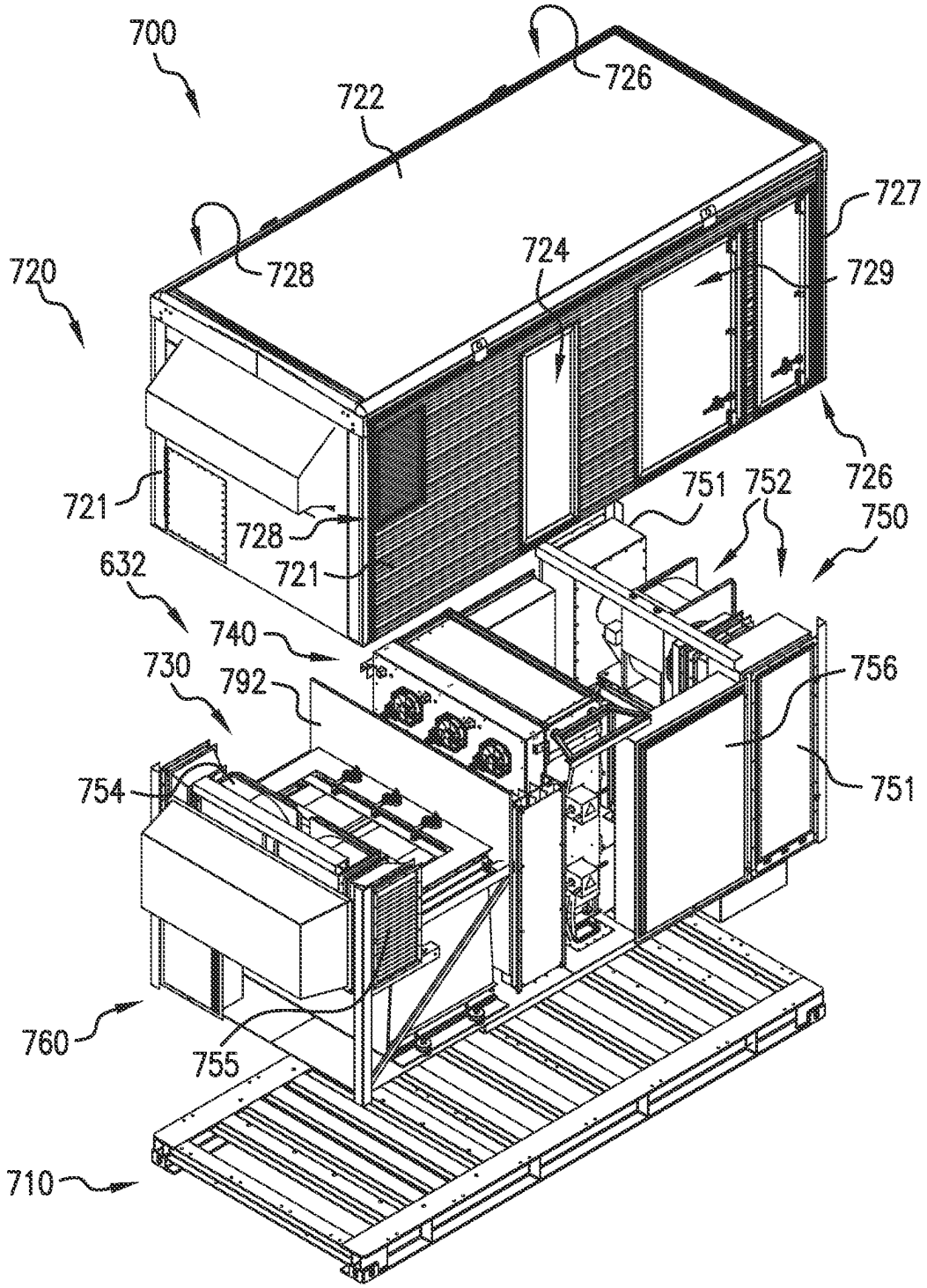
700
722
726
727
720
728
724
729
721
728
721
751
752
726
750
632
740
730
792
756
754
751
760
755
710

FIG. 18

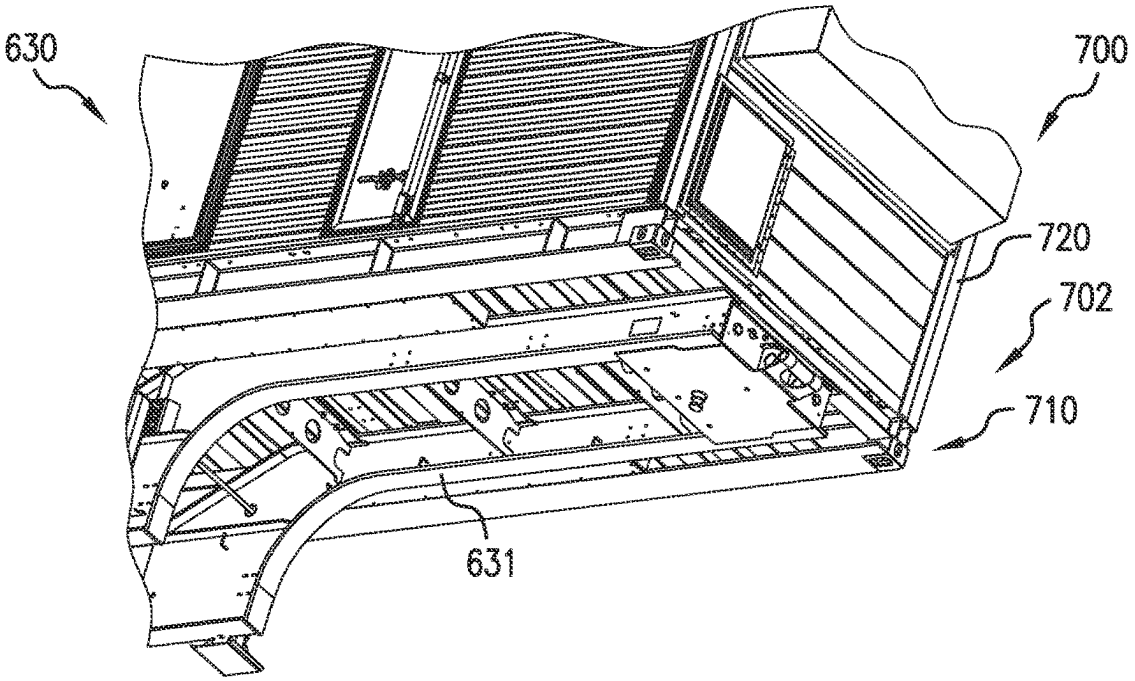

FIG. 19

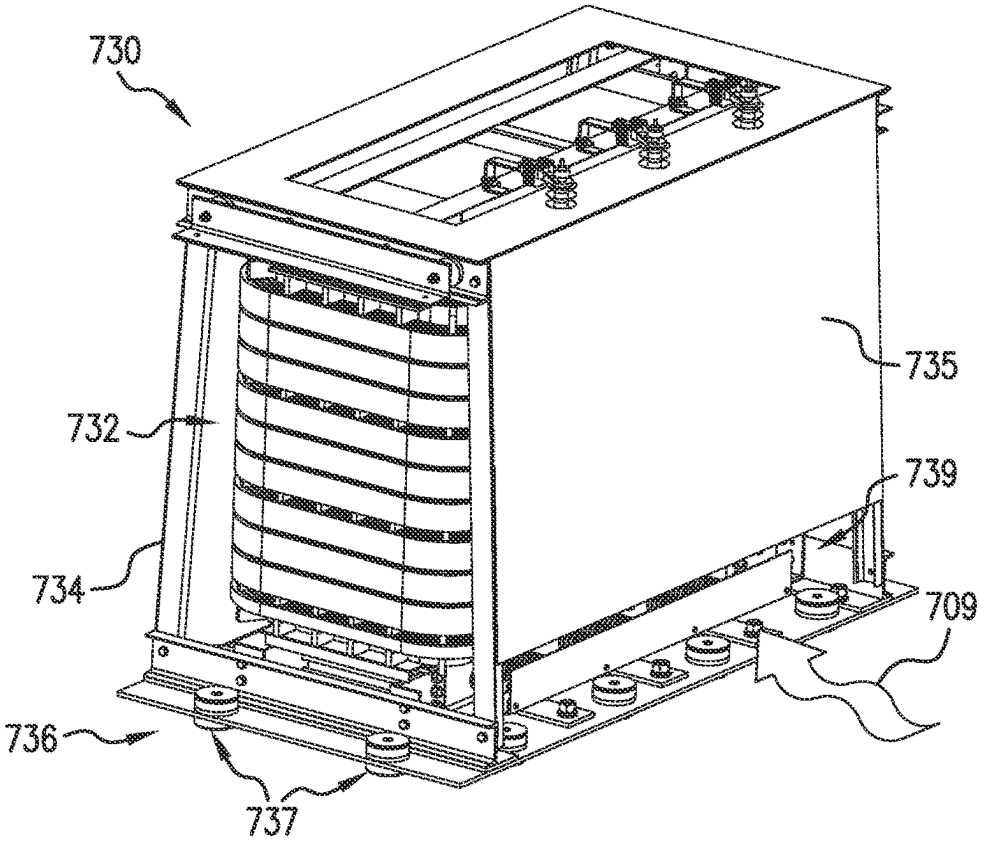

FIG. 20

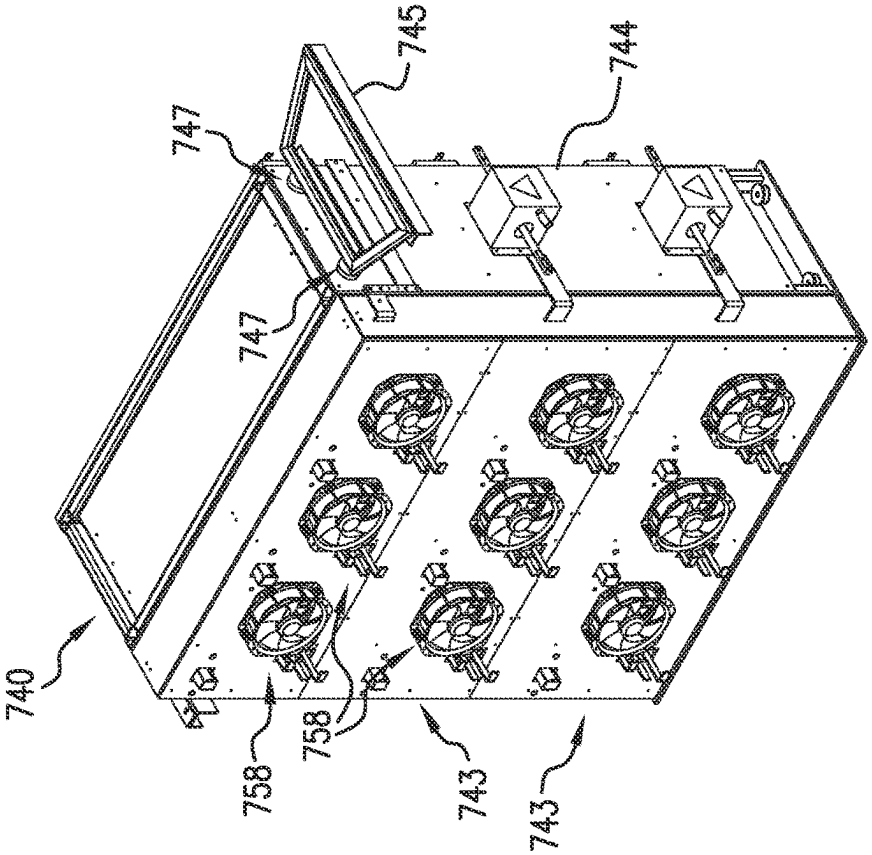
740
745
747
747
744
758
758
743
743

FIG. 22

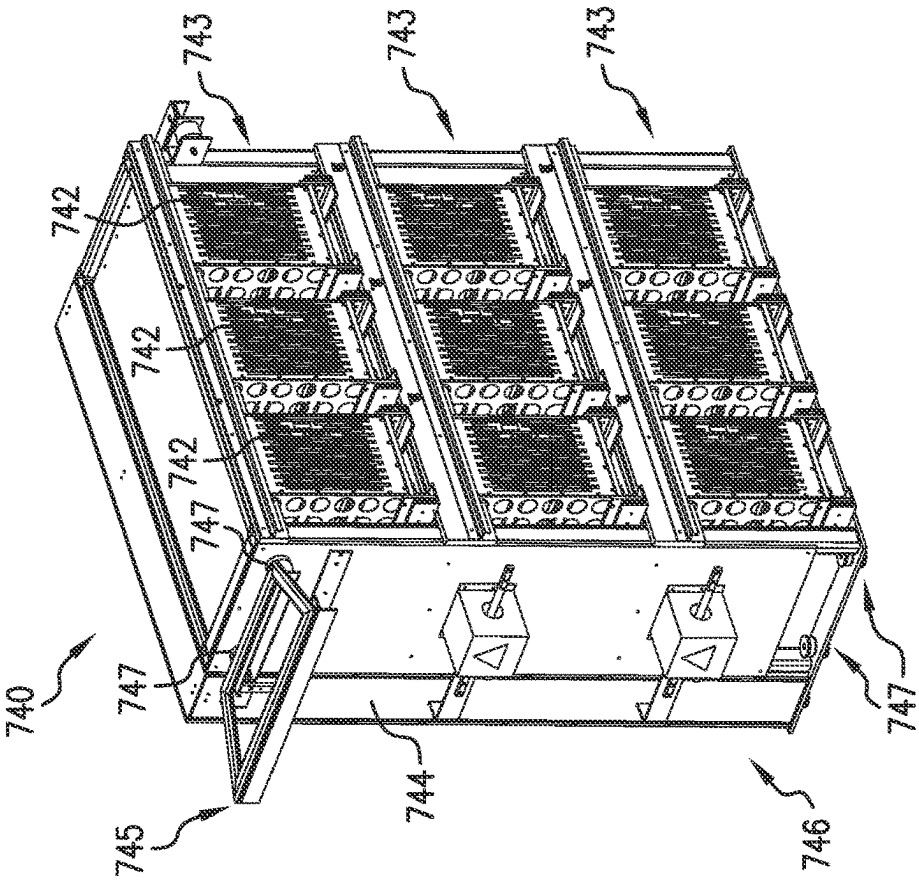
740
745
747
747
742
742
742
743
743
743
744
746
747

FIG. 21

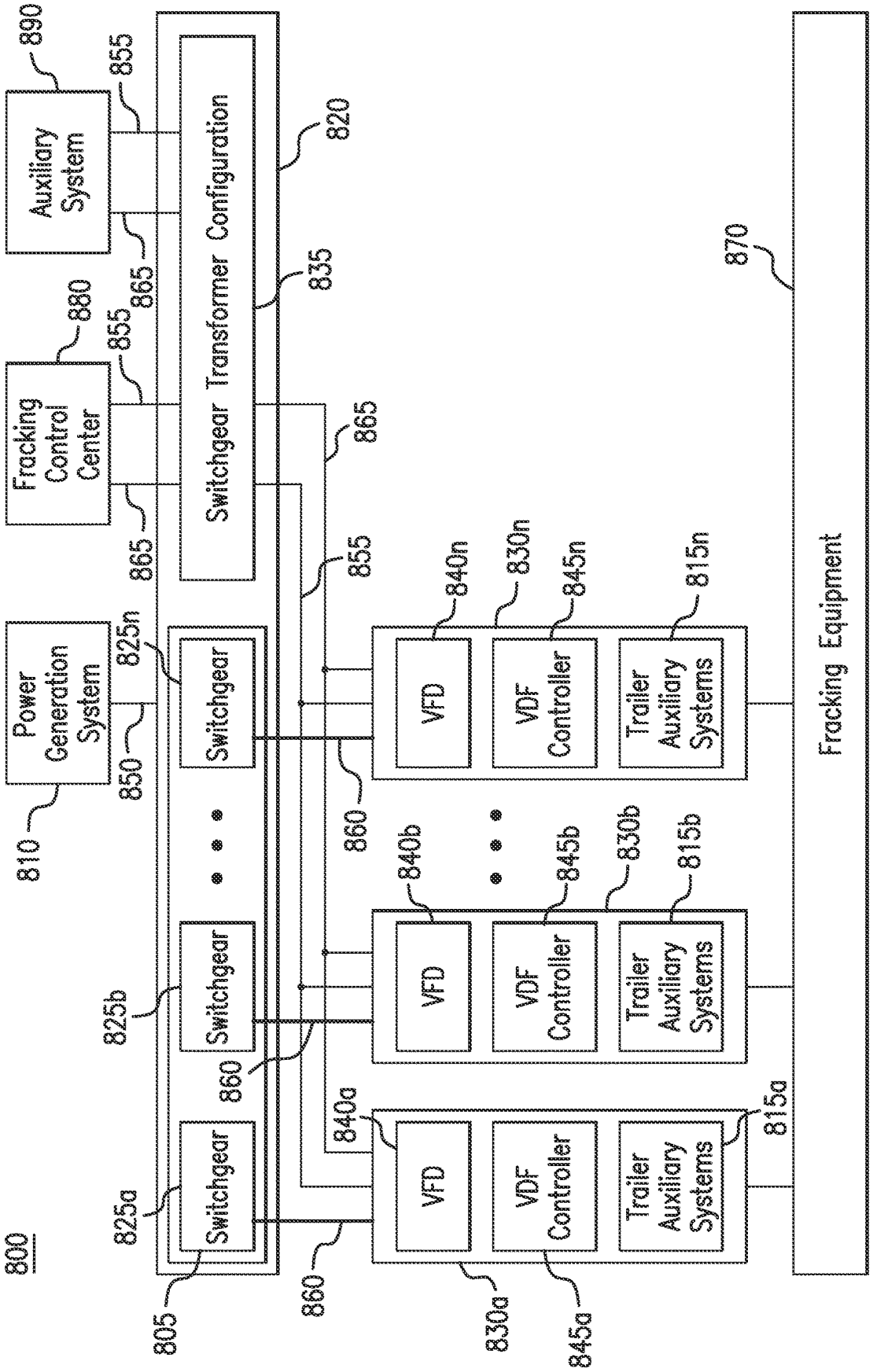
800
Power Generation System
810
Auxiliary System
890
Fracking Control Center
880
Switchgear Transformer Configuration
820
835
Switchgear
825a
825b
825n
805
850
855
860
865
VFD
VDF Controller
Trailer Auxiliary Systems
840a
840b
840n
845a
845b
845n
830a
830b
830n
815a
815b
815n
Fracking Equipment
870

FIG. 23

ELECTRIC DRIVEN HYDRAULIC FRACKING OPERATION

CROSS-REFERENCE TO RELATED APPLICATIONS

[0001] The present application is a continuation of and claims priority to U.S. patent application Ser. No. 18/453,476 filed Aug. 22, 2023 and published as U.S. Patent Application Publication No. 2023/0392461, which is a continuation of and claims priority to U.S. patent application Ser. No. 18/100,299 filed Jan. 23, 2023, now U.S. Pat. No. 11,739,602, which is a continuation of and claims priority to U.S. patent application Ser. No. 17/869,239 filed Jul. 20, 2022, now U.S. Pat. No. 11,560,764, which is a continuation of and claims priority to U.S. patent application Ser. No. 17/670,885 filed Feb. 14, 2022, now U.S. Pat. No. 11,434,709, which is a continuation of and claims priority to U.S. patent application Ser. No. 17/498,667, filed Oct. 11, 2021, now U.S. Pat. No. 11,274,512, which is a continuation of and claims priority to U.S. patent application Ser. No. 17/239,877, filed Apr. 26, 2021, now U.S. Pat. No. 11,142,972, which is a continuation of and claims priority to U.S. patent application Ser. No. 16/790,897, filed Feb. 14, 2020, now U.S. Pat. No. 10,988,998, which is a continuation of and claims priority to U.S. Provisional Patent Application No. 62/805,521 filed Feb. 14, 2019, each of which is hereby incorporated by reference in its entirety.

TECHNICAL FIELD

[0002] The present disclosure generally relates to electrically-driven hydraulic fracking systems, and more specifically but not exclusively relates to a systems, subsystems, and methods for such electrically-driven hydraulic fracking systems.

BACKGROUND

[0003] Conventional hydraulic fracking systems are diesel-powered in that several different diesel engines supply the power to the hydraulic pumps, as well as several types of auxiliary systems that assist the hydraulic pumps to execute the fracking, such as hydraulic coolers and lubrication pumps. Conventional diesel-powered hydraulic fracking systems require a diesel engine and a transmission to be connected to a hydraulic pump to drive the hydraulic pump. However, typically several hydraulic pumps are required at a single fracking site to extract the fluid from the fracking well. Thus, each of the several hydraulic pumps positioned at a particular fracking site requires a dedicated diesel engine and dedicated transmission to adequately drive the corresponding hydraulic pump, thereby requiring several diesel engines and transmissions to also be positioned at the fracking site in addition to the several hydraulic pumps.

[0004] Typically, the diesel engines limit the horsepower (HP) at which the hydraulic pumps may operate, thereby requiring an increased quantity of hydraulic pumps to attain the required HP necessary to extract the fluid from the fracking well. The increase in hydraulic pumps also results in an increase in the number of diesel engines and transmissions required at the fracking site, as each hydraulic pump requires a corresponding diesel engine and transmission. As the diesel engines, transmissions, and hydraulic pumps for a single fracking site increase, so does quantity of trailers required to transport and position configurations at the fracking site.

[0005] The numerous diesel engines, transmissions, and hydraulic pumps required at a fracking site can significantly drive up the cost of the fracking operation. Each of the numerous trailers required to transport and position these configurations require commercial driver's license (CDL) drivers to operate, as well as increased manpower to rig the increased assets positioned at the fracking site. The amount of diesel fuel required to power the numerous diesel engines to drive the numerous hydraulic pumps required to extract the fluid from the fracking well also significantly drives up the cost of the fracking operation. Further, parasitic losses typically occur as the diesel engines drive the hydraulic pumps as well as drive the auxiliary systems. Such parasitic losses actually decrease the amount of HP that the hydraulic pumps have available for operation, thereby significantly decreasing the efficiency of hydraulic pumps. In doing so, the duration of the fracking operation is extended, resulting in significant increases in the cost of the fracking operation. The diesel engines also significantly increase the noise levels of the fracking operation. For these reasons among others, there remains a need for further improvements in this technological field.

SUMMARY

[0006] Certain embodiments of the present application relate to a variable frequency drive (VFD) cabin for a pump configuration including a mobile trailer on which the VFD cabin is to be mounted. The VFD cabin generally includes a medium-voltage VFD and a ventilation system. In certain embodiments, the ventilation system is configured to generate an overpressure condition within the cabin to discourage the entry of dust and debris into the cabin. In certain embodiments, one or more components of the medium-voltage VFD are coupled to the floor of the cabin via a vibration damping system. In certain embodiments, the VFD cabin may be directly coupled to a chassis of the mobile trailer without an intervening suspension being provided between the VFD cabin and the chassis. Further embodiments, forms, features, and aspects of the present application shall become apparent from the description and figures provided herewith.

BRIEF DESCRIPTION OF THE DRAWINGS

[0007] FIG. **1** is a schematic representation of a hydraulic fracking operation according to certain embodiments.

[0008] FIG. **2** is a schematic block diagram of the fracking operation illustrated in FIG. **1**.

[0009] FIG. **3** illustrates a single-pump pump configuration according to certain embodiments.

[0010] FIGS. **4** and **5** are partially-exploded assembly views of a VFD cabin according to certain embodiments.

[0011] FIG. **6** is a schematic block diagram of a pump configuration including the VFD cabin illustrated in FIGS. **4** and **5**.

[0012] FIG. **7** is a perspective view of a transformer assembly according to certain embodiments.

[0013] FIG. **8** is a perspective view of a power cell assembly according to certain embodiments.

[0014] FIG. **9** is a schematic diagram of a power stack according to certain embodiments.

[0015] FIG. **10** is a perspective view of the power cell assembly illustrated in FIG. **8** with a power cell being extracted along a pair of slide rails.

[0016] FIG. **11** is a schematic diagram of the cabin illustrated in FIGS. **4** and **5**, and schematically illustrates an airflow stream that is generated by operation of a ventilation system.

[0017] FIG. **12** is a perspective view of a junction panel according to certain embodiments.

[0018] FIG. **13** is a partially exploded assembly view of a vibration damping coupler according to certain embodiments.

[0019] FIG. **14** is a cutaway view of the vibration damping coupler in use.

[0020] FIG. **15** is a schematic flow diagram of a process according to certain embodiments.

[0021] FIG. **16** is a schematic flow diagram of a process according to certain embodiments.

[0022] FIG. **17** is a perspective view of a pump configuration according to certain embodiments.

[0023] FIG. **18** is a partially exploded assembly view of a VFD cabin according to certain embodiments.

[0024] FIG. **19** is a perspective view of a portion of the pump configuration illustrated in FIG. **17**.

[0025] FIG. **20** is a perspective view of a transformer assembly according to certain embodiments.

[0026] FIGS. **21** and **22** are perspective views of a power cell assembly according to certain embodiments.

[0027] FIG. **23** is a schematic diagram of a fracking system according to certain embodiments.

DETAILED DESCRIPTION

[0028] The following Detailed Description refers to the accompanying drawings to illustrate exemplary embodiments consistent with the present disclosure. References in the Detailed Description to "one exemplary embodiment," an "exemplary embodiment," an "example embodiment," etc., indicate the exemplary embodiment described may include a particular feature, structure, or characteristic, but every exemplary embodiment may not necessarily include the particular feature, structure, or characteristic. Moreover, such phrases are not necessarily referring to the same exemplary embodiment. Further, when a particular feature, structure, or characteristic may be described in connection with an exemplary embodiment, it is within the knowledge of those skilled in the art(s) to effect such feature, structure, or characteristic in connection with other exemplary embodiments whether or not explicitly described.

[0029] The exemplary embodiments described herein are provided for illustrative purposes, and are not limiting. Other exemplary embodiments are possible, and modifications may be made to the exemplary embodiments within the spirit and scope of the present disclosure. Therefore, the Detailed Description is not meant to limit the present disclosure. Rather, the scope of the present disclosure is defined only in accordance with the following claims and their equivalents.

[0030] Embodiments of the present disclosure may be implemented in hardware, firmware, software, or any combination thereof. Embodiments of the present disclosure may also be implemented as instructions applied by a machine-readable medium, which may be read and executed by one or more processors. A machine-readable medium may include any mechanism for storing or transmitting information in a form readable by a machine (e.g., a computing device). For example, a machine-readable medium may include read only memory ("ROM"), random access memory ("RAM"), magnetic disk storage media, optical storage media, flash memory devices, electrical optical, acoustical or other forms of propagated signals (e.g., carrier waves, infrared signals, digital signals, etc.), and others. Further firmware, software routines, and instructions may be described herein as performing certain actions. However, it should be appreciated that such descriptions are merely for convenience and that such actions in fact result from computing devices, processors, controllers, or other devices executing the firmware, software, routines, instructions, etc.

[0031] The following Detailed Description of the exemplary embodiments will so fully reveal the general nature of the present disclosure that others can, by applying knowledge of those skilled in the relevant art(s), readily modify and/or adapt for various applications such exemplary embodiments, without undue experimentation, without departing from the spirit and scope of the present disclosure. Therefore, such adaptations and modifications are intended to be within the meaning and plurality of equivalents of the exemplary embodiments based upon the teaching and guidance presented herein. It is to be understood that the phraseology or terminology herein for the purpose of description and not of limitation, such that the terminology or phraseology of the present specification is to be interpreted by those skilled in the relevant art(s) in light of the teachings herein.

[0032] As used herein, ranges and quantities may be expressed as "about" a particular value or range. The term "about" includes values that are within 10% of the value provided, and also includes the value provided. For example, "about 50%" means "between 45% and 55%." As another example, "between about 30 and about 40" means "a lower limit between 27 and 33 and an upper limit between 36 and 44."

[0033] As used herein, the term "single" may be used to indicate that the described component lacks a corresponding counterpart, or that exactly one of the component is being described. For example, a "single-shaft electric motor" is an electric motor that includes exactly one output shaft. Similarly, components that are described as being mounted to a "single trailer" are mounted to the same trailer, and are not distributed across multiple trailers.

[0034] With reference to FIGS. **1** and **2**, illustrated therein is a hydraulic fracking operation **100** in which hydraulic pumps may pump a fracking media into a fracking well **109** to execute a fracking operation in order to extract a fluid from the fracking well **109**. The illustrated operation **100** includes a power generation system **110**, a power distribution system **120** connected with the power generation system **110**, a plurality of pump configurations **130** receiving power from the power distribution system **120**, and a fracking system **140** connected with the plurality of pump configurations **130**. The power distribution system **120** may be in communication with a control system **180**, for example via a network **108**, and may further supply electric power to one or more auxiliary systems **190**. As described herein, during operation, the power generation system **110** generates electric power that is supplied to the power distribution system **120**, the power distribution system **120** distributes electric power to the pump configurations **130**, the pump configurations **130** utilize the distributed electric power to continu-

ously pump a fracking media to the fracking system **140**, and the fracking system **140** utilizes the fracking media in a fracking operation in which the fracking system **140** extracts fluid from the fracking well **109**. While certain details regarding the operation **100** are provided herein, further details regarding the hydraulic fracking operation **100** can be found in U.S. patent application Ser. No. 16/790,538, filed on Feb. 13, 2020, the contents of which are incorporated by reference in their entirety.

[0035] The power generation system **110** is configured to generate electric power that can be directed to the power distribution system **120**. The power generation system **110** may be a mobile power generation system, such as one installed to a trailer **111** that can be transported to the fracking site. In certain forms, the power generation system **110** may include one or more power sources (e.g., gas turbine engines **112**, **114**) configured to generate electric power having a wattage in the megawatt (MW) range at an initial voltage level in the medium-voltage range. When generated by the power generation system **110**, the initial voltage level may alternatively be referred to as the power generation voltage level. In certain embodiments, the power generation system **110** may be omitted from the fracking operation **100**. For example, the power distribution system **120** and/or the pump configurations **130** may receive electric power directly from a substation of a power grid. Further details regarding the power generation system **110** are provided herein.

[0036] The power generation system **110** may generate electric power at a power generation voltage level in which the power generation voltage level is the voltage level that the power generation system is capable of generating the electric power. For example, when the power sources of the power generation system **110** include a quantity of gas turbine engines, the power generation system **110** may generate the electric power at the power generation voltage level of 13.8 kV, which is a typical voltage level for electric power generated by gas turbine engines. In another example, when the power sources of the power generation system include an electric power plant, the power generation system **110** may generate the electric power at the power generation voltage level of 12.47 kV, which is a typical voltage level for electric power generated by an electric power plant.

[0037] In another example, the power generation system **110** may generate electric power that is already at a VFD voltage level to power the single-shaft electric motor as discussed in detail below. In such an example, the power generation system **110** may generate the electric power that is already at the VFD voltage level, such as a VFD voltage level of 4160V. In another example, the power generation system **110** may generate the electric power at the power generation voltage level at a range of 4160V to 15 kV. In another example, the power generation system **110** may generate electric power at the power generation voltage level of up to 38 kV. The power generation system **110** may generate the electric power at any power generation voltage level that is provided by the power sources included in the power generation system **110** that will be apparent to those skilled in the relevant art(s) without departing from the spirit and scope of the disclosure. The power generation system **110** may then provide the electric power at the power generation voltage level to the power distribution trailer **120** via one or more medium-voltage cables.

[0038] The power distribution system **120** is configured to receive electric power at an initial medium-voltage voltage level (e.g., from the power generation system **110** and/or the power grid), and to distribute the electric power to the pump configurations **130** and/or the auxiliary system(s) **190**. The power distribution system **120** may be a mobile power distribution system, such as one installed to a trailer **121** that can be transported to the fracking site. The power distribution system **120** may transmit electric power at a medium-voltage voltage level to each pump configuration **130** via medium-voltage power lines **101**, and may further transmit electric power at a medium-voltage voltage level to one or more auxiliary systems **190**. The power distribution system **120** may additionally transmit electric power at a low-voltage voltage level to each pump configuration **130** and/or the auxiliary system(s) via low-voltage power lines **102**. The power distribution system **120** may be in communication with the pump configurations **130** via communication lines **103** and/or via wireless communication devices. Further details regarding the power distribution system **120** are provided herein. Additional details regarding an exemplary form of the power distribution system are provided in U.S. patent application Ser. No. 16/790,538, filed on Feb. 13, 2020, the contents of which are incorporated by reference in their entirety.

[0039] Each pump configuration **130** is configured to receive electric power from the power distribution system **120** and/or another source, and to pump a fracking media to the fracking system **140** using the received electric power. Each pump configuration **130** generally includes a medium-voltage variable frequency drive (VFD) **132** that converts electric power at the initial medium-voltage voltage level to electric power at a VFD voltage level, a single, single-shaft electric motor **134** that generates motive power in response to being supplied with the electric power at the VFD voltage level, and a single hydraulic pump **136** connected to the single shaft **135** of the single, single-shaft electric motor **138** to continuously pump a fracking media to the fracking system **140**. As described herein, the medium-voltage VFD **132** may be housed in a VFD cabin, which may further include a ventilation system that operates using low-voltage power to cool the medium-voltage VFD **132**. Further details regarding the pump configuration **130** and the VFD cabin are provided herein. Additional details regarding an exemplary form of the medium-voltage VFD **132** are provided in U.S. patent application Ser. No. 16/790,581, filed on Feb. 13, 2020, the contents of which are incorporated by reference in their entirety.

[0040] The illustrated fracking system **140** generally includes a mobile trailer **141** on which a fracking configuration may be positioned. The fracking configuration may be the fracking equipment **142** that executes the actual fracking to extract the fluid from the fracking well **109**. For example, the fracking trailer **141** may include the fracking equipment **142** that implements the missile in addition to the well heads that are affixed to the fracking well **109** and distribute the fracking media into the fracking well **109** to prepare the well **109** for later extraction of the fluid from the well **109**. The fluid extracted from the fracking well **109** may include a liquid, such as crude oil or the like, or a gas, such as natural gas, hydrocarbons, or the like that is extracted from the fracking well **109** that is then stored and/or distributed. In certain embodiments, a portion of the extracted fluid may be

utilized to fuel power sources (e.g., gas turbine engines **112**, **114**) of the power generation system **110**.

[0041] The power that is generated to provide power to each of the numerous components included in the hydraulic fracking operation **100** may be provided as a power generation system **110**, which may be provided on a power generation trailer **111**. Often times, the fracking site is a remote site where it has been determined that sufficient fluid has been located underground to justify temporarily establishing the hydraulic fracking operation **100** for a period of time to drill the fracking well **109** and extract the fluid from the fracking well **109**. Such fracking sites are oftentimes positioned in remote locations such as uninhabited areas in mountainous regions with limited road access to the fracking sites. As a result, the hydraulic fracking operation **100** is oftentimes a mobile operation where each of the components is positioned on a corresponding trailer that is then hauled to the fracking site via semi-trucks and/or tractors. For example, the fracking system **140** includes a trailer **141** including fracking equipment **142** that is hauled in via a semi-truck and is positioned closest to the fracking well **109** as compared to the other components in order to execute the fracking operation.

[0042] In certain embodiments, the power generation system **110** may also be a mobile operation such that the power generation equipment may be positioned on a power generation trailer **111** and transported to the fracking site via a semi-truck and/or tractor. The power generation system **110** may be positioned at the fracking site such that each and any component/subsystem of the hydraulic fracking operation **100** may be powered by the power generation system **110**. In doing so, the power required for the hydraulic fracking operation **100** may be consolidated to the power generation system **110** such that the power generation system **110** provides the necessary power required for the hydraulic fracking operation **100**. Thus, the power generation system **110** may be positioned at the fracking site such that each component/subsystem of the hydraulic fracking operation **100** may have power distributed from the power generation system **110** to each respective component of the hydraulic fracking operation **100**.

[0043] The power generation system **110** may include power generation systems that generate electric power such that the hydraulic fracking operation **100** is powered via electric power generated by the power generation system **110** and does not require subsidiary power generation systems such as subsidiary power generation systems that include diesel engines. In doing so, the power generation system **110** may provide electric power to each component of the hydraulic fracking operation **100** such that the hydraulic fracking operation **100** is solely powered by electric power generated by the power generation system **110**. The power generation system **110** may consolidate the electric power that is generated for the electric driven hydraulic fracking system **100** such that the quantity and size of power sources included in the power generation system **110** is decreased.

[0044] The power generation system **110** may include power generation systems that generate electric power such that the hydraulic fracking operation **100** is powered only via electric power generated by power generation system **110**. In such forms, the fracking operation **100** may not necessarily require subsidiary power generation systems, such as subsidiary power generation systems that include diesel engines. The power generation system **110** may provide electric power to each component of the hydraulic fracking operation **100** such that the hydraulic fracking operation **100** is solely powered by electric power generated by the power generation system **110**.

[0045] In certain embodiments, the power generation system **110** may include at least one power source (e.g., a gas turbine engine and/or generator), and the power source may operate using one or more fuels (e.g., unleaded gasoline) and generate electric power that is then provided to each component of the hydraulic fracking operation **100**. In certain embodiments, the at least one power source may operate using fluid extracted from the fracking well **109** during the course of the fracking operation. In certain embodiments, the power generation system **110** may include electric power that is provided directly by an electric utility company such that mobile power sources are not required to provide electric power to the hydraulic fracking operation **100**. In certain embodiments, the power generation system **110** may include a combination of electric power generated by at least one power source and electric power generated by the electric utility company to power each of the components of the hydraulic fracking operation **100**. The power generation system **110** may include any type of power source to generate electric power to power each component of the hydraulic fracking operation **100** that will be apparent to those skilled in the relevant art(s) without departing from the spirit and scope of the disclosure.

[0046] The power generation system **110** may generate electric power at an initial power level in the megawatt (MW) range and an initial voltage level in the medium-voltage range. In certain embodiments, the initial power level is about 24 megawatts (MW) or greater. In certain embodiments, the initial voltage level is about 10 kilovolts (kV) to about 15 kV. While certain embodiments and examples provided herein are described with reference to an initial voltage level of about 13.8 kV, or about 13.8 kV or greater, it is to be understood that in other embodiments, the initial voltage level may be a different voltage level in the medium-voltage range. In certain embodiments, the initial voltage level may be between 1 kV and 16 kV. In certain embodiments, the initial voltage level may be between about 6 kV and about 15 kV. In certain embodiments, the initial voltage level may be in the range of 12.5 kV±about 20%, 12.5 kV±about 15%, or 12.5 kV±about 10%. In certain embodiments, the initial voltage level may be in a range of about 11.8 kV to about 14.5 kV. In certain embodiments, the initial voltage level may be in the standard 15 kV voltage class, the most common forms of which are 12.47 kV, 13.2 kV, 13.8 kV, and 14.4 kV. Accordingly, the examples provided herein are not to be construed as limiting the scope of the disclosed subject matter to initial voltages of 13.8 kV.

[0047] The power generation system **110** may generate electric power at a wattage level such that there is sufficient electric power to adequately power each of the components of the hydraulic fracking operation **100** while having power sources (e.g., gas turbine engines **112**, **114**) in quantity and in size that enable the power sources to be transported to the fracking site and set up remotely via a trailer **111**. In doing so, the power generation system **110** may include power sources that generate sufficient electric power to adequately power each of the components of the hydraulic fracking operation **100** while not requiring a large quantity of power sources and/or power sources of significant size that may

significantly increase the difficulty and cost to transport the power sources to the fracking site.

[0048] In order to provide sufficient electric power to adequately power each of the components of the hydraulic fracking operation **100** while not requiring large quantities of power sources and/or power sources of significant size, the power generation system **110** may include power sources (e.g., gas turbine engines **112**, **114**) that generate electric power at a wattage level of about 5 MW, about 12 MW, about 16 MW, about 20 to about 25 MW, about 30 MW and/or any other wattage level that may not require large quantities of power sources and/or power sources of significant size that will be apparent to those skilled in the relevant art(s) without departing from the spirit and scope of the disclosure.

[0049] In certain embodiments, the power generation system **110** may include a first power source in the form of a first gas turbine engine **112** that generates a first electric power at a first power level in range of about 12 MW to about 16 MW and a second power source in the form of a second gas turbine engine **114** that generates a second electric power at a second power level in a range of about 12 MW to about 16 MW. The first gas turbine engine **112** and the second gas turbine engine **114** may generate the electric power at the initial voltage level, which electric power may be provided to the power distribution system **120**. In certain embodiments, it may be desirable to provide sufficient electric power to adequately power each component of the hydraulic fracking operation **100** as well as limit the quantity of gas turbine engines and the size of the gas turbine engines such that the gas turbine engines may be positioned on a single trailer **111** and transported to the fracking site. In order to do so, the power generation system **110** may include two electric gas turbine engines **112**, **114** that generate electric power at power levels in the range of about 12 MW to about 16 MW such that the total electric power that is available to power the components of the hydraulic fracking operation **100** is in the range of about 24 MW to about 32 MW. In another example, the power generation system **110** may be the electric utility power plant that is local to the location of the fracking operation such that the power distribution trailer **120** may receive the electric power at the power level of 24 MW and the power generation voltage level of 12.47 kV directly from the electric utility power plant.

[0050] Further, the power generation system **110** including plural power sources (e.g., gas turbine engines **112**, **114**) to generate the electric power provides redundancy in the power generation for the hydraulic fracking operation **100**. In doing so, the power generation system **110** provides a fault redundancy to the electric driven hydraulic fracking system in that the first power source continues to provide the first power level to the power distribution system **120** in the event that the second power source suffers a fault condition. Similarly, the second power source continues to provide the second power level to the power distribution system **120** in the event that the first power source suffers the fault condition. The power generation system **110** may then maintain one or more hydraulic pumps **136*a*-136*n*** to continuously operate in the continuous duty cycle without interruption in continuously pumping the fracking media due to the system level redundancy provided by the first power source and the second power source.

[0051] By incorporating two power sources (e.g., two gas turbine engines **112**, **114**), redundancy may be provided in that the electric power is provided to the components of the hydraulic fracking operation **100** such that the fracking media is continuously pumped into the fracking well **109** despite one of the power sources suffering a short circuit condition. In doing so, the incident energy may be reduced thereby reducing the short circuit availability of the power generation system **110**. However, if one of the power sources **112**, **114** were to fail due to a short circuit condition, the remaining power source engine may continue to provide sufficient power to ensure the fracking media is continuously pumped into the fracking well **109**, albeit at a reduced level. A failure to continuously pump the fracking media into the well may result in the sand, which is a major component of the fracking media coming out of the suspension and creating a plug at the bottom of the well, which typically results in a significant expense to remove the sand in the well so that the fracking can continue. The power generation system **110** may include any combination of power sources and/or single power source at any wattage level to sufficiently generate electric power to adequately power each of the components of the hydraulic fracking operation **100** that will be apparent to those skilled in the relevant art(s) without departing from the spirit and scope of the disclosure. As noted above, it is also contemplated that the power generation system **110** may be omitted, for example in embodiments in which the power distribution system **120** receives the initial electric power from the power grid.

[0052] The power generation system **110** may generate the electric power at an initial voltage level that is in the medium voltage range of 1.0 kV to 72.0 kV. In certain embodiments, the power generation system **110** may generate the electric power at an initial voltage level of about 5 kV to about 15 kV. In certain embodiments, the initial voltage may be provided in the range of 12.5 kV±about 10%. In certain embodiments, the initial voltage may be provided in the range of about 10 kV to about 15 kV. In certain embodiments, the initial voltage may be provided as about 13.8 kV or greater. The generation of the electric power at the voltage level in the medium voltage range enables medium-voltage cables to be used to connect the power generation system **110** to the power distribution system **120** to propagate the electric power from the power generation system **110** to the power distribution system **120**, as well as enabling the use of medium-voltage cables to propagate the electric voltage level to any of the components powered by the electric power in the medium voltage range. The use of medium-voltage cables rather than the use of high-voltage cables decreases the size of the cable required, in that medium-voltage cables are smaller than high-voltage cables. This may reduce the cost of the cables required for the hydraulic fracking operation **100**.

[0053] Further, the consolidation of power sources to decrease the quantity of power sources required to power the components of the hydraulic fracking operation **100** also reduces the quantity of medium-voltage cables that are required to connect each of the power sources to the power distribution system **120**, thereby further reducing the cost of the cables required for the hydraulic fracking operation **100**. Further, in embodiments in which the power generation system **110** generates the electric power at the initial voltage level of about 13.8 kV, and the capability of the power distribution system **120** to distribute such power, enables the

hydraulic fracking operation **100** to be easily integrated with many electric utility grids the world over, since the most common voltage for distribution from the substations of the electric utility grids is about 13.8 kV. As a result, the electric grid may be easily substituted for the power generation system **110** in replacement of the power sources (e.g., the gas turbine engines **112**, **114**).

[0054] The power distribution system **120** may distribute the electric power at the power level generated by the power generation system **110** to each pump configuration **130***a*-**130***n*, where n is an integer greater than or equal to one and corresponds to the number of pump configurations **130**. As noted above, the power generation system **110** may include at least one power source to generate the electric power, and may be supplemented or replaced by the electric utility grid. In doing so, a medium-voltage power cable may be connected from the power generation system **110** to the power distribution system **120**. For example, the power generation system **110** may include two gas turbine engines **112**, **114** with each of the gas turbine engines generating electric power at the power level of about 12 MW to about 16 MW at the initial voltage level (e.g., an initial voltage level of about 13.8 kV). In such an example, two to five medium-voltage power cables may then connect the two gas turbine engines **112**, **114** to the power distribution system **120** such that the electric power may propagate from the gas turbine engines **112**, **114** to the power distribution system **120**.

[0055] As noted above, the power distribution system **120** may distribute the electric power to each of the pump configurations **130***a*-**130***n*. More particularly, the power distribution system **120** distributes the electric power at the medium-voltage initial voltage level to each of the medium-voltage VFDs **132***a*-**132***n*, each of which is positioned on a corresponding one of the pump trailers **131***a*-**131***n* and included in the corresponding pump configuration **130***a*-**130***n*. As discussed in further detail below, several different hydraulic pumps **136** *a*-**136** *n* may be required to continuously pump the fracking media into the fracking well **109** to execute the fracking operation. In doing so, each of the hydraulic pumps **136***a*-**136***n* may be driven by a corresponding VFD **132***a*-**132***n* also positioned on the corresponding pump trailer **131***a*-**131***n* of the corresponding pump configuration **130***a*-**130***n*. Each of the medium-voltage VFDs **132***a*-**132***n* may then provide the appropriate power to drive the corresponding single-shaft electric motors **134** *a*-**134** *n*, each of which drives a corresponding one of the hydraulic pumps **136***a*-**136***n* to continuously pump the fracking media into the fracking well **109** to execute the fracking operation to extract the fluid from the fracking well **109**. Thus, the power distribution system **120** may distribute the electric power generated by the power generation system **110** to the several different VFDs **132***a*-**132***n* positioned on each of the pump trailers **131***a*-**131***n*. As described herein, the power distribution system **120** may further provide medium-voltage power to the auxiliary system(s) **190** and/or may provide low-voltage power to the pump configurations **130***a*-**130***n* and/or the auxiliary system(s) **190**.

[0056] In an example, the power distribution system **120** is configured to distribute the electric power at the power level of about 24 MW or greater generated by the at least one power source (e.g., the one or more gas turbine engines **112**, **114**) from an initial voltage level of about 13.8 kV to the medium-voltage VFDs **132***a*-**132***n*, each of which is positioned on a corresponding pump trailer **131***a*-**131***n*. In such an example, the power generation system **110** includes two different gas turbine engines **112**, **114** that each generate electric power at the power level of about 12 MW to about 16 MW and at the initial voltage level of about 13.8 kV. Two to five different medium-voltage cables may then propagate the electric power generated by the two gas turbine engines **112**, **114** to the power distribution system **120**. The power distribution system **120** may then combine the power levels of about 12 MW to about 16 MW generated by each of the two gas turbine engines **112**, **114** to generate a power level of about 24 MW to about 32 MW at the initial voltage level of about 13.8 kV. The power distribution system **120** may then distribute the electric power at the initial voltage level of about 13.8 kV to each of eight different VFDs **132***a*-**132***n* via eight different medium-voltage cables **101**. The power distribution system **120** may distribute the power generated by any quantity of gas turbine engines to any quantity of VFDs that will be apparent to those skilled in the relevant art(s) without departing from the spirit and scope of the disclosure.

[0057] In certain embodiments, the power distribution system **120** may include a plurality of switchgear, wherein each switchgear switches the electric power generated by the power generation system **110** and received by the corresponding medium-voltage cable to the medium-voltage cable **101** for each of the corresponding medium-voltage VFDs **132***a*-**132***n*. For example, the power distribution system **120** may include eight different switchgear feeders to switch the electric power generated by the power source (e.g., the two gas turbine engines **112**, **114**) at the initial medium-voltage voltage level to the eight different medium-voltage cables **101** for the eight medium-voltage VFDs **132***a*-**132***n* to distribute the electric power at the initial medium-voltage voltage level to each of the eight medium-voltage VFDs **132***a*-**132***n*. Further details regarding an illustrative form of the power distribution system **120** are provided in the above-referenced U.S. patent application Ser. No. 16/790,538.

[0058] In certain embodiments, the switchgears may include a solid state insulated switchgear (2SIS) or a gas insulated switchgear (GIS), such as those manufactured by ABB or Schneider Electric. Such medium-voltage switchgears may be sealed such that there is no exposure to contacts for the medium-voltage electric power. Oftentimes the fracking site generates an immense amount of dust and debris. Thus, removing any environmental exposure to medium-voltage contacts included in the 2SIS or GIS may decrease the maintenance required for the 2SIS or GIS. Further, the 2SIS and/or GIS may be permanently set to distribute the electric power from each of the power sources (e.g., the gas turbine engines **112**, **114**) to each of the different VFDs **132***a*-**132***n* with little maintenance. The power distribution system **120** may incorporate any type of switchgear and/or switchgear configuration to adequately distribute the electric power from the power generation system **110** to each of the different pump configurations **130***a*-**130***n* that will be apparent to those skilled in the relevant art(s) without departing from the spirit and scope of the disclosure.

[0059] With additional reference to FIG. **3**, illustrated therein is a single, single-pump configuration **130** that includes a medium-voltage VFD **132**, a single, single-shaft electric motor **134** and a single hydraulic pump **136**, each of which is mounted on a single pump trailer **131**. Also

mounted to the same trailer **131** is a VFD cabin **200** in which the medium-voltage VFD **132** is housed. Further details regarding the illustrative VFD cabin **200** are provided below with reference to FIGS. **4-14**, and an exemplary process for manufacturing the cabin **200** is provided below with reference to FIG. **15**.

[0060] The power distribution system **120** may distribute the electric power at the initial voltage level generated by the power generation system **110** to the medium-voltage VFD **132** that is positioned on the single pump trailer **131** of the pump configuration **130**. The medium-voltage VFD **132** may then drive the single, single-shaft electric motor **134** and the single hydraulic pump **136** as well as control the operation of the single, single-shaft electric motor **134** and the single hydraulic pump **136** as the single-shaft electric motor **134** continuously drives the single hydraulic pump **136** to cause the single hydraulic pump **136** to continuously pump the fracking media. In doing so, the VFD **132** may convert the electric power distributed by the power distribution system **120** at the initial voltage level generated by the power generation system **110** to a VFD voltage level that is appropriate to drive the single-shaft electric motor **134**.

[0061] Often times, the initial voltage level of the electric power distributed by the power distribution system **120** as generated by the power generation system **110** may be at a voltage level that is significantly higher than a voltage level that is appropriate to drive the single-shaft electric motor **134**. Thus, the medium-voltage VFD **132** may convert the initial voltage level of the electric power as distributed by the power distribution system **120** to significantly lower the voltage level to the VFD voltage level that is appropriate to drive the single-shaft electric motor **134**. In certain embodiments, the medium-voltage VFD **132** may convert the initial voltage level of the electric power as distributed by the power distribution system **120** to a VFD voltage level of about 4160V or greater. In certain embodiments, the medium-voltage VFD **132** may convert the initial voltage level of the electric power distributed by the power distribution system **120** to a VFD voltage level that ranges from about 4160V to about 6600V. In certain embodiments, the VFD voltage level may be in a range of about 2 kV to about 8 kV. Further details regarding an illustrative form of the medium-voltage VFD **132** are provided in the above-referenced U.S. patent application Ser. No. 16/790,581.

[0062] In an example, the power generation system **110** generates the electric power at an initial voltage level in a range of about 10 kV to about 15 kV. The power distribution system **120** then distributes the electric power at the initial voltage level in the range of about 10 kV to about 15 kV to the medium-voltage VFD **132**. However, the single-shaft electric motor **134** operates at a voltage level of about 4160V in order to drive the single hydraulic pump **136**, and the voltage level of about 4160V for the single-shaft electric motor **134** to operate is significantly less than the voltage level in the range of about 10 kV to about 15 kV of the electric power that is distributed by the power distribution system **120** to the medium-voltage VFD **132**. The medium-voltage VFD **132** may then convert the electric power at the initial voltage level in the range of about 10 kV to about 15 kV to a VFD voltage level of about 4160V and drive the single, single-shaft electric motor **134** that is positioned on the single pump trailer **131** at the VFD voltage level of about 4160V to control the operation of the single, single-shaft electric motor **134** and the single hydraulic pump **136**. The medium-voltage VFD **132** may convert any voltage level of the electric power distributed by the power distribution system **120** to any VFD voltage level that is appropriate to drive the single-shaft electric motor that will be apparent to those skilled in the relevant art(s) without departing from the spirit and scope of the disclosure.

[0063] The medium-voltage VFD **132** may also control the operation of the single-shaft electric motor **134** and the single hydraulic pump **136**. The medium-voltage VFD **132** may include a sophisticated control system able to control in real-time the operation of the single-shaft electric motor **134** and the single hydraulic pump **136** in order for the single-shaft electric motor **134** and the single hydraulic pump **136** to adequately operate to continuously pump the fracking media into the fracking well **109**. Although the single, single-shaft electric motor **134** and the single hydraulic pump **136** may operate continuously to continuously pump the fracking media into the fracking well **109**, such continuous operation may not necessarily be continuously executed with the same parameters throughout the entirety of the continuous operation. The parameters according to which the single-shaft electric motor **134** and the single hydraulic pump **136** continuously operate may actually vary based on the current state of the fracking operation **100**. The medium-voltage VFD **132** may automatically adjust the parameters according to which the single-shaft electric motor **134** and the single hydraulic pump **136** continuously operate to adequately respond to the current state of the fracking operation **100**.

[0064] As noted above, the medium-voltage VFD **132** may convert the electric power at the initial voltage level distributed by the power distribution system **120** to the VFD voltage level that is appropriate to drive the single-shaft electric motor **134**. The single-shaft electric motor **134** may be a single-shaft electric motor in that the single shaft **135** of the electric motor is coupled to the single hydraulic pump **136** such that the single, single-shaft electric motor **134** drives the single hydraulic pump **136**. The single, single-shaft electric motor **134** may continuously drive the single hydraulic pump **136** at an operating frequency to enable the single hydraulic pump **136** to continuously pump the fracking media into the fracking well **109**. The single, single-shaft electric motor **134** may operate at the VFD voltage level and at the operating frequency in order to rotate at a RPM level that is sufficient to continuously drive the single hydraulic pump **136** at the maximum horsepower (HP) level that the single hydraulic pump **136** is rated to pump. In certain embodiments, the single-shaft electric motor **134** may operate at a VFD voltage level of at least 4160V or at a voltage level of about 4160V. In certain embodiments, the single-shaft electric motor **134** may operate at a VFD voltage level in a range of 4160V to 6600V or in a range of about 4160V to about 6600V. In certain embodiments, the single-shaft electric motor **134** may operate at other VFD voltages. The single-shaft electric motor **134** may operate any VFD voltage level that is adequate to continuously drive the single hydraulic pump **136** that will be apparent to those skilled in the relevant art(s) without departing from the spirit and scope of the disclosure.

[0065] In an example, the power distribution system **120** may distribute the electric power to the medium-voltage VFD **132** at an initial voltage level of about 13.8 kV. The medium-voltage VFD **132** may then convert the electric power at the voltage level of about 13.8 kV to the VFD

voltage level of about 4160V to adequately drive the single, single-shaft electric motor **134**. The single-shaft electric motor **134** may operate at an operating frequency of 0 Hz to 100 Hz and, in response to provision of the VFD voltage level of about 4160V to about 6900V to adequately drive the single-shaft electric motor at the operating frequency of 0 Hz to 100 Hz, the single, single-shaft electric motor **134** may then rotate at an RPM level of about 750 RPM or greater. The single-shaft electric motor **134** may rotate at an RPM level of at least about 750 RPM based on the VFD voltage level of about 4160V to about 6900V as provided by the medium-voltage VFD **132**, and to drive the corresponding single hydraulic pump **136** with the rotation at the RPM level of at least about 750 RPM.

[0066] In certain embodiments, the single-shaft electric motor **134** may rotate at an RPM level of at least 5 RPM to 750 RPM, or an RPM level of about 750 RPM or greater. In certain embodiments, the motor **134** may rotate at an RPM level of about 500 RPM or greater. In certain embodiments, the single-shaft electric motor **134** may rotate at an RPM level of about 750 RPM to about 1500 RPM. The single-shaft electric motor **134** may operate at any RPM level to continuously drive the single hydraulic pump **136** that will be apparent to those skilled in the relevant art(s) without departing from the spirit and scope of the disclosure. The single-shaft electric motor **134** may operate at any operating frequency to continuously drive the single hydraulic pump **136** that will be apparent to those skilled in the relevant art(s) without departing from the spirit and scope of the disclosure.

[0067] In certain embodiments, the single-shaft electric motor **134** may be an induction motor that rotates at the RPM level based on the input gear box ratio of the single hydraulic pump **136**. Based on the operating frequency of the single-shaft electric motor **134** and the VFD voltage level applied to the single-shaft electric motor **134**, the single-shaft electric motor **134** may then rotate at the RPM level, and outputs torque at an output torque level that corresponds to the operating frequency and VFD voltage level. However, the VFD voltage level applied to the single-shaft electric motor **134** may be determined based on the input gear box ratio of the single hydraulic pump **136** as the single-shaft electric motor **134** typically cannot rotate at the RPM level that exceeds the input gear box ratio of the single hydraulic pump **136**. The single-shaft electric motor **134** may be an induction motor, a traction motor, a permanent magnet motor and/or any other motor that continuously drives the single hydraulic pump **136** that will be apparent to those skilled in the relevant art(s) without departing from the spirit and scope of the disclosure.

[0068] As noted above, the single-shaft electric motor **134** may be coupled to the single hydraulic pump **136** and drive the single hydraulic pump **136** such that the single hydraulic pump **136** continuously pumps the fracking media into the fracking well **109** to execute the fracking operation to extract the fluid from the fracking well **109**. The single hydraulic pump **136** may operate on a continuous duty cycle such that the single hydraulic pump **136** continuously pumps the fracking media into the fracking well **109**. Rather than operating on an intermittent duty cycle that causes conventional hydraulic pumps to temporarily stall in the pumping of the fracking media into the fracking well **109**, the single hydraulic pump **136** in operating on a continuous duty cycle may continuously pump the fracking media into the fracking well **109** without any intermittent stalling in the pumping. In doing so, the efficiency in the fracking operation to extract the fluid from the fracking well **109** may significantly increase as any intermittent stalling in pumping the fracking media into the fracking well **109** may result in setbacks in the fracking operation, and may increase the risk of sand coming out of suspension and/or other debris entering into the fracking well **109**. Thus, the single hydraulic pump **136** in operating on the continuous duty cycle may mitigate the risks of any setbacks in the fracking operation due to the continuous pumping of the fracking media into the fracking well **109**.

[0069] The single hydraulic pump **136** may continuously pump the fracking media into the fracking well **109** at the HP level at which the single hydraulic pump **136** is rated. The increase in the HP level that the single hydraulic pump **136** may continuously pump the fracking media into the fracking well **109** may result in an increase in the efficiency in the fracking operation. For example, the single hydraulic pump **136** may continuously pump the fracking media into the fracking well **109** at the HP level of about 5000 HP or greater as driven by the single-shaft motor **134** at the RPM level of about 750 RPM or greater. In certain embodiments, the single hydraulic pump **136** operates on a continuous duty cycle to continuously pump the fracking media at the HP level of about 5000 HP or greater. In certain embodiments, the single hydraulic pump **136** may operate at continuous duty with a HP level of about 5000 HP. The hydraulic pump **136** may, for example, be provided as a Weir QEM5000 pump, or other manufacturers of similar rating. However, the single hydraulic pump **136** may any type of hydraulic pump that operates on a continuous duty cycle and at any HP level that adequately continuously pumps the pumping fracking media into the fracking well **109** to execute the fracking operation to extract the fluid from the fracking well **109** that will be apparent to those skilled in the relevant art(s) without departing from the spirit and scope of the disclosure.

[0070] In certain embodiments, the individual pump configuration **130** discussed in detail above may be incorporated into the hydraulic fracking operation **100** depicted in FIG. **1** as each of the pump configurations **130*a*-130*n***. Each of the several pump configurations **130*a*-130*n*** may be incorporated into the hydraulic fracking operation **100** to increase the overall HP level that is applied to the fracking equipment **142** positioned on the fracking trailer **141** by the hydraulic pumps **136*a*-136*n*** positioned on the pump trailers **131*a*-131*n***. In doing so, the overall HP level that is applied to the fracking equipment **142** in order to continuously pump the fracking media into the fracking well **109** may be significantly increased, as the HP level that is applied to the fracking equipment **142** is scaled with each pump configuration **130** that is added to the hydraulic fracking operation **100**.

[0071] The positioning of each medium-voltage VFD **132*a*-132*n***, each single-shaft electric motor **134** ***a*-134** ***n***, and each single hydraulic pump **136*a*-136*n*** on a corresponding pump trailer **131*a*-131*n*** enables the power distribution system **120** to distribute the electric power at the initial voltage level to each medium-voltage VFD **132*a*-132*n*** from a single power distribution source (e.g., the power distribution system **120**) rather than having a dedicated power distribution source for each pump configuration **130*a*-130*n***. In doing so, the electric power at the initial voltage level may

be distributed to each VFD **132***a*-**132***n*, and each VFD **132***a*-**132***n* may individually convert the initial voltage level to the appropriate VFD voltage for the corresponding single-shaft electric motor **134** *a*-**134** *n* and the single hydraulic pump **136***a*-**136***n* that is positioned on the corresponding pump trailer **131***a*-**131***n*. The medium-voltage VFD **132** may also control the corresponding single-shaft electric motor **134** and hydraulic pump **136** positioned on the corresponding pump trailer **131**.

[0072] In isolating the medium-voltage VFD **132** to convert the electric power at the initial voltage level to the VFD voltage level appropriate for the single, single-shaft electric motor **134** and the single hydraulic pump **136**, the capabilities of the single-pump pump configuration **130** may then be easily scaled by replicating the single-pump pump configuration **130** into several different single-pump pump configurations **130***a*-**130***n*. In scaling the single-pump pump configuration **130** into several different single-pump pump configurations **130***a*-**130***n*, the parameters for the medium-voltage VFD **132**, the single-shaft electric motor **134**, and the single hydraulic pump **136** may be replicated to generate the several different pump configurations **130***a*-**130***n*, and in doing so scaling the fracking operation **100** to a desired size (e.g., a desired overall HP level).

[0073] In certain embodiments, the medium-voltage VFD **132** may convert the electric power at the initial voltage level (as distributed by the power distribution system **120**) to the VFD voltage level appropriate to drive the corresponding single-shaft electric motor **134**, such that each single-shaft electric motor **134** rotates at the RPM level sufficient to continuously drive the single hydraulic pump **136** at the rated HP level of the hydraulic pump **136**. Rather than simply having a single hydraulic pump **136** as depicted in FIG. **2** and discussed in detail above to continuously pump at the HP level of the single hydraulic pump **136**, several different hydraulic pumps **136***a*-**136***n* and single-shaft electric motors **134** *a*-**134** *n* (as positioned on different pump trailers **131***a*-**131***n*) may be scaled together to scale the overall HP level that is provided to the fracking equipment **142** positioned on the fracking trailer **141**. In doing so, the overall HP level that is provided to the fracking equipment **142** may be easily scaled by incorporating each of the individual pump trailers **131***a*-**131***n* each with single hydraulic pumps **136***a*-**136***n* operating at the corresponding pump HP levels to scale the HP levels of the single hydraulic pumps **136***a*-**136***n* to generate the overall HP level for the hydraulic fracking operation **100**.

[0074] For example, the single hydraulic pump **136** of each corresponding pump configuration **130***a*-**130***n* may be operating on a continuous duty cycle at a HP level about 5000 HP or greater. A total of eight pump configurations **130***a*-**130***n*, each with a single hydraulic pump **136***a*-**136***n* positioned on the corresponding pump trailer **131***a*-**131***n*, results in a total of eight hydraulic pumps **136***a*-**136***n* operating on a continuous duty cycle at a HP level of about 5000 HP or greater (where n is equal to eight). In doing so, each of the eight hydraulic fluid pumps **136***a*-**136***n* continuously pumps the fracking media into the fracking well **109** at a HP level of about 40,000 HP or greater, and do so continuously with each of the eight hydraulic fluid pumps **136***a*-**136***n* operating on a continuous duty cycle. Thus, the fracking media may be continuously pumped into the fracking well **109** at a HP level of about 40,000 HP or greater to execute the fracking operation to extract the fluid from the fracking well **109**. The hydraulic pumps **136***a*-**136***n* positioned on the corresponding pump trailers **131***a*-**131***n* may operate on a continuous duty at any HP level, and the quantity of pump configurations **130***a*-**130***n* may be scaled to any quantity obtain a desired overall HP level for the hydraulic fracking operation **100** that will be apparent to those skilled in the relevant art(s) without departing from the spirit and scope of the present disclosure.

[0075] Conventional hydraulic fracking operations that incorporate diesel engines as the power generation source rather than electric gas turbine engines struggle to deliver an increased performance and efficiency with regard to executing the fracking operation as compared to the electric driven hydraulic fracking operation **100**. Typically, conventional hydraulic pumps that are associated with the conventional diesel engines are not rated for continuous duty, resulting in the conventional hydraulic pumps having intermittent interruptions in the pumping of the fracking media into the fracking well **109**. Such intermittent interruptions may decrease the efficiency in executing the fracking operation in that the quality in the fracking operation may decrease as the risk of sand and/or other debris being mixed into fracking well **109** increases. Rather than having a continuous duty single hydraulic pump **136** that continuously pumps the fracking media into the fracking well **109** without interruption, the conventional hydraulic pump suffers the intermittent interruption due to not being continuous duty.

[0076] Further, conventional hydraulic fracking operations that incorporate diesel engines require dedicated diesel engines to drive each conventional hydraulic pump, rather than being able to consolidate the power generation to a power generation system **110** that consolidates the quantity and size of the gas turbine engines to generate the electric power. Such an increase in diesel engines significantly increases the cost of the fracking operation in that significantly more trailers are required to transport the diesel engines. This results in significantly more semi-trucks and/or trailers required to transport the diesel engines, and a corresponding increase in the number of CDL drivers required. As the overall asset count increases at the fracking site, the overall cost increases due to the increased amount of manpower required, as well as an increase in the amount of rigging that is required to rig each of the diesel engines to the conventional hydraulic pumps. By contrast, the electric driven hydraulic fracking operation **100** may decrease the asset count by consolidating the power generation to the gas turbine engines **112**, **114** of decreased size and quantity that are consolidated into the power generation system **110**. The power distribution system **120** then further decreases the cost by consolidating the medium-voltage cabling that is required to power each of the assets (e.g., the pump configurations **130** and/or the auxiliary system(s) **190**), thereby decreasing the amount of rigging required.

[0077] It should also be noted that conventional hydraulic fracking operations that incorporate diesel engines suffer significant parasitic losses throughout the different components included in the fracking operation. Diesel engines that generate power that satisfies the HP level at which the conventional fluid pumps are rated oftentimes do not reach that HP level due to parasitic losses throughout the conventional hydraulic fracking configuration. For example, the diesel engines may suffer parasitic losses when driving the hydraulic coolers and the lubrication pumps that are associated with the conventional hydraulic pump, in addition to

the parasitic losses suffered from driving the conventional hydraulic pump itself. By way of example, the diesel engine may be driving the conventional hydraulic pump that is rated at 2500 HP at a nominal HP level of 2500 HP, but due to parasitic losses, the diesel engine is actually only driving the conventional hydraulic pump at 85% of the HP level of 2500 HP. However, the electric driven hydraulic fracking operation **100** may have the hydraulic pumps **136***a*-**136***n* that are rated at the HP level of 5000 HP and, due to the lack of parasitic losses in providing electric power to the individual hydraulic pumps **136***a*-**136***n*, each individual hydraulic pump **136***a*-**136***n* actually continuously pumps the fracking media into the fracking well **109** at about 5000 HP. Thus, the asset count required for the electric driven hydraulic fracking operation **100** may be significantly reduced as compared to the hydraulic fracking operations that incorporate diesel engines due to the lack of parasitic losses for the electric driven hydraulic fracking operation **100**.

[0078] Conventional hydraulic fracking operations that incorporate diesel engines may also consume significantly more fuel than the electrically-driven hydraulic fracking operation **100**. The cost and quantity of diesel fuel consumed by the diesel engines may be significantly higher than the cost and quantity of unleaded fuel consumed by the gas turbine engines that are consolidated in size and quantity in the power generation system **110**. For example, the estimated fuel consumption for fifteen conventional 2500 HP hydraulic pumps that are driven by diesel may be $48,600 per day at $3.00 per gallon for diesel fuel resulting in a diesel fuel cost of $1,477,400 per month. However, the electric driven hydraulic fracking operation **100** may generate sufficient energy to drive fifteen single hydraulic pumps **136***a*-**136***n* operating at the HP level of 5000 HP resulting in a fuel cost of $27,000 per day and $820,800 per month. This represents a fuel savings of $650,000 per month from the conventional hydraulic fracking operations that incorporate diesel engines, while generating significantly more HP with the 5000 HP single hydraulic pumps **136***a*-**136***n* as compared to the 2500 HP conventional hydraulic pumps for the diesel engine approach. Moreover, in certain embodiments, the gas turbine engines **112**, **114** may be fueled by fluid extracted from the fracking well **109**, which may further decrease the cost of fuel required to generate power via the mobile power generation system **110**.

[0079] Conventional hydraulic fracking operations that incorporate diesel engines may also generate significantly more noise than the electric driven hydraulic fracking operation **100**. The numerous diesel engines required in the conventional hydraulic fracking operations generate increased noise levels in that the diesel engines generate noise levels at 110 dBa. However, the gas turbine engines **112**, **114** incorporated into the power generation system **110** of the electric driven hydraulic fracking operation **100** may generate noise levels that are less than 85 dBa. Oftentimes, the fracking site has noise regulations in that the noise levels of the fracking operation cannot exceed 85 dBa. In such situations, an increased cost is associated with the conventional hydraulic fracking operations that incorporate diesel engines in attempts to lower the noise levels generated by the diesel engines to below 85 dBa. The electric driven fracking operation **100** may not necessarily have the increased cost, as the noise levels of the gas turbine engines may already fall below 85 dBa.

[0080] Certain conventional hydraulic fracking systems attempt to increase the overall HP level of the fracking site by having dual-shaft motors drive two conventional hydraulic pumps simultaneously. In doing so, the overall HP level of the fracking site is essentially doubled by doubling the quantity of conventional hydraulic pumps by having conventional dual-shaft motors drive the two conventional hydraulic pumps simultaneously. However, the two conventional hydraulic pumps are both connected to a single conventional dual-shaft motor such that the single conventional dual-shaft motor drives the two hydraulic pumps simultaneously and also in synchronization. In driving the two conventional hydraulic pumps in synchronization, significantly increased harmonics are generated from the synchronized operation of the two conventional hydraulic pumps. Those harmonics resonate into the fracking operation and down the line into the fracking well **109**, and may cause wear and pulsation of the high-pressure iron in the fracking well **109**, thereby negatively affecting the fracking operation. In contrast to the illustrated operation **100**, in which single-shaft electric motors **134** *a*-**134** *n* drive individual hydraulic pumps **136***a*-**136***n* at the HP level of 5000 HP that results in no harmonics, the conventional dual-shaft motors drive two conventional hydraulic pumps at the HP level of 2500 HP to attain the HP level of 5000 HP, but does so with no way to offset the synchronized operation to eliminate the harmonics from resonating into the fracking well **109**.

[0081] Further, the increase in the quantity of conventional hydraulic pumps further increases the asset count, which increases the first costs as well as the cost of operation. Rather than having eight individual hydraulic pumps **136***a*-**136***n* rated at the HP level of 5000 HP to obtain a total HP level of about 40,000 HP for the fracking site, the conventional hydraulic fracking systems require sixteen conventional hydraulic pumps rated at the HP level of 2500 HP to obtain the total HP level of 40,000 HP. In doing so, a significant cost is associated with the increased quantity of conventional hydraulic pumps. Further, conventional hydraulic pumps that fail to incorporate a medium-voltage VFD **132***a*-**132***n*, a single-shaft electric motor **134** *a*-**134** *n*, and a single hydraulic pump **136***a*-**136***n* onto a single pump trailer **131** further increase the cost by increasing additional trailers and rigging required to set up the numerous different components at the fracking site. By contrast, the electric driven hydraulic fracking operation **100** may incorporate the power distribution system **120** to consolidate the power generated by the power generation system **110** and then limit the distribution and the cabling required to distribute the electric power to each of the single-pump pump configurations **130***a*-**130***n*.

[0082] In certain embodiments, one or more auxiliary systems **190** may be positioned at the fracking site, and may also be electrically driven by the electric power generated by power generation system **110**. The auxiliary systems **190** may assist each of the hydraulic pumps **136***a*-**136***n* as well as the fracking equipment **142** as each of the hydraulic pumps **136***a*-**136***n* operate to execute the fracking operation to extract the fluid from the fracking well **109**. In doing so, the auxiliary systems **190** may be systems in addition to the fracking equipment **142** and the hydraulic pumps **136***a*-**136***n* that are required to execute the fracking operation or otherwise desired by the party or parties performing and/or controlling the fracking operation.

[0083] For example, the auxiliary system **190** may include a hydration system that provides adequate hydration to the fracking media as the hydraulic pumps **136***a*-**136***n* continuously pump the fracking media into the fracking well **109**. As another example, an auxiliary system **190** may include an electric blender that blends the fracking media that is then pumped by the hydraulic pumps. Such an electric blender may operate using power distributed to the auxiliary system **190** by the power distribution system **120**, for example power at a voltage level of about 4160V. Auxiliary systems **190** may include but are not limited to hydration systems, chemical additive systems, blending systems, mixing systems and/or any other type of system that is required or desired at the fracking site that may be electrically driven by the electric power generated by the power generation system **110** that will be apparent to those skilled in the relevant art(s) without departing from the spirit and scope of the disclosure.

[0084] The electric power generated by the power generation system **110** may thus be distributed by the power distribution system **120** such that the electric power generated by the power generation system **110** may also be incorporated to power the auxiliary systems **190**. In doing so, the electric power generated by the power generation system **110** may be incorporated to not only drive the pump configurations **130***a*-**130***n* via the medium-voltage VFDs **132***a*-**132***n* positioned on each pump trailer **131***a*-**131***n* but to also power the auxiliary systems **190** and/or auxiliary systems of the pump configurations **130***a*-**130***n*. Thus, the hydraulic fracking operation **100** may be completely electrically-driven in that each of the required systems positioned on the fracking site may be powered by the electric power generated by the electric power that is consolidated to the power generation system **110**.

[0085] As noted above, each medium-voltage VFD **132** may include a sophisticated control system that may control in real-time the operation of the corresponding single-shaft electric motors **134** and the individual hydraulic pumps **136** in order for the single-shaft electric motors **134** and the individual hydraulic pumps **136** to adequately operate to continuously pump the fracking media into the fracking well **109**. However, the control system **180** that may be positioned at the fracking site and/or remote from the fracking site may also control the medium-voltage VFDs **132***a*-**132***n*, and in doing so control the real-time operation of the single-shaft electric motors **134** *a*-**134** *n* and the single hydraulic pumps **136***a*-**136***n* in order for the single-shaft electric motors **134** *a*-**134** *n* and the single hydraulic pumps **136***a*-**136***n* to adequately operate to continuously pump the fracking media into the fracking well **109**. In doing so, the control system **180** may intervene to control the medium-voltage VFDs **132***a*-**132***n* when necessary. The control system **180** may additionally or alternatively control the fracking system **140** and/or the auxiliary systems **190** in order to ensure that the fracking operation is adequately executed to extract the fluid from the fracking well **109**.

[0086] Communication between the control system **180** on the one hand and the medium-voltage VFDs **132***a*-**132***n*, the fracking equipment **142**, and/or the auxiliary systems **190** on the other hand may occur via wireless and/or wired connection communication. Wireless communication may occur via one or more networks **108** such as the internet. In some embodiments, the network **108** may include one or more wide area networks (WAN) or local area networks (LAN). The network(s) **108** may utilize one or more network technologies such as Ethernet, Fast Ethernet, Gigabit Ethernet, virtual private network (VPN), remote VPN access, a variant of IEEE 802.11 standard such as Wi-Fi, and the like. Communication over the network(s) **108** may take place using one or more network communication protocols including reliable streaming protocols such as transmission control protocol (TCP), Ethernet, Modbus, CanBus, EtherCAT, ProfiNET, and/or any other type of network communication protocol that will be apparent from those skilled in the relevant art(s) without departing from the spirit and scope of the present disclosure. Wired connection communication may occur but is not limited to a fiber optic connection, a coaxial cable connection, a copper cable connection, and/or any other type of direct wired connection that will be apparent from those skilled in the relevant art(s) without departing from the spirit and scope of the present disclosure. These examples are illustrative and not intended to limit the scope of the present disclosure.

[0087] With additional reference to FIGS. **4**-**6**, the VFD cabin **200** generally includes a cabin housing **202** including a floor **210** and a cap **220**, and the medium-voltage VFD **132** generally includes a transformer assembly **230** and a power cell assembly **240**. The cabin housing **202** further houses a ventilation system **250** operable to circulate air to cool the medium-voltage VFD **132** during operation, and a junction panel **260** connected with the medium-voltage VFD **132** and the ventilation system **250**.

[0088] The VFD cabin **200** may be connected with the power distribution system **120** via one or more lines, and in the illustrated embodiment is connected with the power distribution system **120** via a medium-voltage power line **101** and a low-voltage power line **102**. As used herein, the term "low voltage" refers to voltages of about 1.0 kV or less. In certain embodiments, the VFD cabin **200** may further be connected with the power distribution system **120** via a communication line **103** such that the power distribution system **120** is able to control operation of the VFD cabin **200** (e.g., under control of the control system **180**), and thereby to control operation of the hydraulic pump **136**. In certain embodiments, the VFD cabin **200** may be in wireless communication with the power distribution system **120** such that the power distribution system **120** is operable to wirelessly communicate with the VFD cabin **200**. As described herein, the lines **101**-**103** may connect to the cabin **200** via the junction panel **260**, further details of which are provided below with reference to FIG. **12**.

[0089] The floor **210** supports various internal components of the VFD cabin **200**, and in the illustrated embodiment is configured for direct coupling with the pump trailer **131**, for example via bolts and/or welding. This is in contrast to certain existing VFD cabins, in which a cabin cap is lowered onto a cabin floor to form a cabin housing, and the cabin housing is indirectly coupled to the trailer frame via a shock-absorbing suspension, such as airbags and/or springs. In such prior art cabins, the shock-absorbing suspension was required in order to isolate the relatively delicate electronic components of the VFD from the vibrations that are inherent to road travel, and which can be particularly severe when traveling to a remote fracking site. As described herein, however, the need for such a suspension between the cabin **200** and the trailer **131** may be obviated by the vibration-damping components provided within the cabin **200**.

[0090] The cap **220** includes a plurality of sidewalls **221** and a roof **222**, and is configured for mounting to the floor

210 to enclose the cabin **200**. In certain forms, the cap **220** may include a skeleton or base structure on which a skin or external structure is mounted. While other materials are contemplated, in the illustrated form, the skeleton is formed of steel, the skin for the sidewalls **221** is formed of aluminum, and the skin for the roof **222** is formed composite. In certain embodiments, the cap **220** may be provided as a preformed cap that is lowered onto the floor **210** after installation of the transformer assembly **230** and/or one or more other internal components of the cabin **220**. In other forms, the cap **220** may be built up from the floor **210** after installation of one or more internal components of the cabin **200**, such as the transformer assembly **230**.

[0091] One or more of the sidewalls **221** may have formed therein a maintenance hatch covered by a maintenance door **224** and/or a low-voltage VFD closet **229** covered by a low-voltage VFD closet door **225**. The maintenance hatch and maintenance door **224** permit maintenance of certain internal components of the cabin **200** without requiring the maintenance personnel to enter the cabin **200**. Similarly, the low-voltage VFD closet **229** and VFD closet door **225** permit maintenance of one or more low-voltage VFDs **257** from outside the cabin **200**, thereby obviating the need for maintenance personnel to enter the higher-voltage environment of the cabin interior. In certain forms, the components of the cabin **200** most likely to require service are accessible via one or more maintenance doors **224** and/or the low-voltage VFD closet door **225**. Accordingly, the cabin **200** may lack an entry door sized and shaped to permit entry into the cabin interior, thereby preventing personnel from entering the medium-voltage environment within the cabin **200**. In such embodiments, should one or more components inaccessible via the doors **224**, **225** require maintenance or replacement, the cap **220** may need to be removed in order to permit such maintenance or replacement, and the cap **220** may be removably coupled to the floor **210** to facilitate such removal. In other embodiments, the cap **220** may include an entry door in order to permit entry into the cabin interior.

[0092] One of the sidewalls **221** includes an air intake port **227**, which in the illustration of FIG. **4** is covered by a sliding door **226** that covers a filtration unit **251** of the ventilation system at least during transport of the cabin **200**. As will be appreciated, the sliding door **226** may be opened prior to operation of the ventilation system **250** to expose the intake port **227** to permit intake air to flow into the filtration unit **251** under the force of one or more intake blowers **252**. In certain embodiments, the sliding door **226** may be equipped with a prop switch that detects whether the door **226** is propped, and operation of the ventilation system **250** may be controlled based upon information received from the prop switch. One of the sidewalls **221** includes one or more air outlet ports **228** that permit expulsion of air from the cabin **200**. While other locations are contemplated, in the illustrated form, the air intake port **227** and the air outlet ports **228** are respectively positioned on the fore and aft end walls of the cabin cap **220**.

[0093] With additional reference to FIG. **7**, the transformer assembly **230** generally includes a transformer **232**, a transformer assembly frame **234** to which the transformer **232** is mounted, and a vibration damping assembly **236** through which the frame **234** is mounted to the cabin floor **210**. The transformer **232** is connected between the medium-voltage line **101** and the power cell assembly **240**, and is configured to transform the medium-voltage power received via the medium-voltage line **101** to a transformer voltage that is suitable for use by the power cell assembly **240**, such as about 750V. The vibration damping assembly **236** includes a plurality of vibration damping couplers **237**, each of which aids in coupling the frame **234** to the floor **210** while reducing vibrations transmitted from the cabin floor **210** to the frame **234**. An example form of a vibration damping coupler **300** that may be used as the vibration damping couplers **237** is described below with reference to FIGS. **13** and **14**.

[0094] With additional reference to FIGS. **8-10**, the power cell assembly **240** generally includes a plurality of power cells **242**, a power cell assembly frame **244** to which the plurality of power cells **242** are mounted, a vibration damping assembly **246** through which the frame **244** is mounted to the cabin floor **210**, and a plurality of temperature sensors **249**. The power cells **242** are arranged in stacks **243**, each stack **243** including three power cells **242** corresponding to the three phases of three-phase alternating current (AC). Each stack **243** is configured to step up the three-phase AC power received from the transformer **232** at the transformer voltage level to a higher voltage such that the power output from the medium-voltage VFD **132** is in a form suitable to drive the corresponding single-shaft electric motor **134**. For example, each stack **243** may step up the voltage by about 750V. In certain embodiments, each power cell **242** accepts a voltage of approximately 750 VAC and produces a single phase AC voltage, and these voltages are combined in series per each phase to create a three-phase output suitable to control the electric motor **134**. Further details regarding the electrical operation of the medium-voltage VFD **132** can be found in the above-referenced U.S. patent application Ser. No. 16/790,581.

[0095] In the illustrated embodiment, each power cell **242** is mounted to the frame **244** via one or more slide rails **245**, which facilitate removal and replacement of the individual power cells **242**. Additionally, each power cell **242** has a dedicated temperature sensor **249** and a dedicated cooling fan **258**, with the cooling fans **258** comprising a portion of the ventilation system **250**. As with the above-described vibration damping assembly **236**, the vibration damping assembly **246** includes a plurality of vibration damping couplers **247**, each of which aids in coupling the frame **244** to the cabin floor **210** while reducing vibrations transmitted from the floor **210** to the frame **244**. An example form of vibration damping coupler **300** that may be used as the vibration damping couplers **247** is described below with reference to FIGS. **13** and **14**.

[0096] The ventilation system **250** generally includes one or more intake filtration units **251** positioned at the one or more intake ports **227**, one or more intake blowers **252** connected with the filtration unit(s) **251**, one or more exhaust blowers **254** positioned at the exhaust port **228**, and a ventilation control system **256** in communication with the intake blower(s) **252** and the exhaust blower(s) **254**. The ventilation system **250** further includes the plurality of cooling fans **258**, which may also be in communication with the ventilation control system **256**.

[0097] The filtration unit **251** comprises one or more filters that filter the air being drawn into the cabin **200** under the charging of the intake blower(s) **252**. In certain embodiments, one or more of the filters provided in the filtration unit **251** may be a hydrophobic filter. When the sliding door **226** is open and the intake port **227** is exposed, the at least

one intake blower **252** is operable to draw air into the cabin **200** via the intake port **227** and the filtration unit **251** under the control of the ventilation control system **256**. The filtration unit(s) **251** may be sealed to the intake blower(s) **252** to ensure that all air drawn into the intake blowers **252** first passes through the filtration unit(s) **251**. The at least one exhaust blower **254** is configured to blow air from the cabin interior through the exhaust port(s) **228** to cause the air to exit the cabin **200**. In certain embodiments, the total cubic feet per minute (CFM) rating of the intake blower(s) **252** may be greater than the total CFM rating of the exhaust blower(s) **254**. In certain embodiments, an exhaust filter **255** may be positioned at the exhaust port **228** to discourage the entry of contaminants (e.g., dust and debris) into the cabin **200** when the ventilation system **250** is idle.

[0098] In the illustrated form, the ventilation control system **256** includes one or more low-voltage VFDs **257** by which the intake blower **252**, the exhaust blower **254**, and/or the cooling fans **258** are controlled. In certain forms, the one or more low-voltage VFDs **257** control operation of the blowers **252**, **254** and/or the cooling fans **258** using power supplied by the power distribution system **120** via the low-voltage power line **102**. In certain embodiments, the control system **256** includes multiple low-voltage VFDs **257**, each of which is dedicated to a corresponding one of the blowers **252**, **254**. By way of example, the ventilation system **250** may include a pair of intake blowers **252** and a pair of exhaust blowers **254**, and the ventilation control system **256** may include four low-voltage VFDs **257**, each dedicated to controlling operation of a respective one of the blowers **252**, **254**. In such forms, the provision of multiple low-voltage VFDs **257** enables the operating speed of the blowers **252**, **254** to be ramped up and ramped down as needed. This is in contrast to certain conventional systems, in which intake and exhaust blowers are operated solely as on/off blowers. Due to the fact that blowers can contribute a significant amount of acoustic noise to a fracking operation, the additional control afforded by providing each blower **252**, **254** with a dedicated low-voltage VFD **257** may enable the cabin **200** to produce less noise when the full degree of cooling is not required.

[0099] The ventilation control system **256** may receive power via the low-voltage line **102**, which may be connected with the ventilation control system **256** via the junction panel **260**. While other voltages are contemplated, in certain forms, the low-voltage line **102** may provide power to the ventilation control system **256** at a low-voltage voltage level of about 480V. In the illustrated form, the low-voltage VFDs **257** are positioned in a VFD closet **229** that is accessible via the VFD closet door **225** such that the low-voltage VFD **257** can be accessed from the exterior of the cabin **200** without requiring maintenance personnel to enter the higher-voltage interior of the cabin **200**.

[0100] As noted above, the sliding door **226** that covers the intake filtration unit **251** during transport may be equipped with a prop switch that detects the open/closed position of the door **226**. In certain embodiments, the ventilation control system **256** may control operation of the ventilation system **250** based upon information received from the prop switch (e.g., information indicating the open/closed position of the door **226**). For example, the ventilation control system **256** may limit operation of the intake blower(s) **252** to times at which the prop switch indicates that the door **226** is open. By way of illustration, it may be the case that the door **226** has been closed in an attempt to warm up the functional components of the medium-voltage VFD **132**, and the ventilation control system **256** may cause the ventilation system **250** to remain idle during such a warming procedure.

[0101] The ventilation system **250** also includes or is in communication with the plurality of temperature sensors **249**, each of which may be dedicated to a corresponding one of the power cells **242** as noted above. In certain embodiments, the ventilation control system **256** may control operation of the cooling fans **258** based upon information received from the temperature sensors **249**. For example, in the event that a particular temperature sensor **249** indicates that the temperature of the corresponding power cell **242** has increased, the ventilation control system **256** may cause the corresponding cooling fan **258** to increase in speed. When the temperature sensor **249** indicates that the temperature of the corresponding power cell **242** has fallen, the ventilation control system **256** may reduce the speed of the corresponding cooling fan **258**. In certain embodiments, each cooling fan **258** is rated to provide about 650 CFM of airflow or more.

[0102] As noted above, one issue that frequently arises in the context of fracking operations is the presence of dust and debris in the air. Should this dust and debris make its way into the VFD cabin **200**, the power cells **242** may become damaged or degraded. However, the VFD cabin **200** includes certain features that may discourage such entry of contaminants into the cabin **200**. As one example, the intake filtration unit **251** serves to filter the air entering the cabin **200**, such as when the intake blower **252** is operated to draw air into the cabin **200** via the intake port **227**. The exhaust port(s) **228** may similarly be provided with filter(s) **255** to discourage the entry of dust when the ventilation system **250** is idle. Additionally, the sliding door **226** serves to cover the intake port **227** during transport and times of non-use, thereby protecting the filtration unit **251** from the gusts and sustained winds that may otherwise damage the filtration unit **251**.

[0103] A further feature of the ventilation system **250** that may aid in discouraging the entry of dust and debris is the creation of an overpressure condition within the cabin **200**. As used herein, the term "overpressure condition" indicates that the pressure within the cabin **200** is greater than the pressure outside the cabin **200**. As a result of this overpressure condition, any dust or debris that may otherwise make its way through cracks or openings within the cabin housing **202** will instead be blown away from the cabin interior. In certain forms, the overpressure condition may be created by operating the intake blower(s) **252** at a higher rate than the exhaust blower(s) **254** is/are operated. By way of illustration, the intake blower(s) **252** may be controlled to provide an intake airflow rate of about 14,000 CFM, while the exhaust blower(s) **254** may be operated to provide an exhaust airflow rate of about 12,000 CFM. As will be appreciated by those skilled in the art, such a difference in intake flowrate and exhaust flowrate will generally create an overpressure condition within the enclosed cabin **200** to discourage dust and debris from infiltrating into the cabin **200** through any cracks or openings that may be present in the cabin housing **202**. As noted above, the blowers **252**, **254** may be controlled by dedicated low-voltage VFDs **257**. In such forms, the ventilation control system **256** may cause the low-voltage VFDs **257** to control the intake blower(s) **252**

and the exhaust blower(s) **254** such that the total intake CFM provided by the one or more intake blowers **252** exceeds the total exhaust CFM provided by the one or more exhaust blowers **254**.

[0104] With additional reference to FIG. **11**, operation of the ventilation system **250** results in the generation of an airstream **209** that generally travels or flows from the intake port **227** to the exhaust port **228**. The transformer assembly **230** and the power cell assembly **240** are positioned within this airstream **209** such that the airstream **209** cools the transformer **232** and the power cells **242** as the relatively cooler air flows over the relatively warmer electrical components. Typically, the transformer **232** will run at a higher temperature than the power cells **242**. In order to ensure that the power cells **242** receive relatively cooler air (i.e., air that has not been heated by the relatively hot transformer **232**), the power cells **242** may be positioned in the airstream **209** upstream of the transformer **232** and the transformer **232** may be positioned in the airstream **209** downstream of the power cells **242**.

[0105] In certain embodiments, the cabin **200** may include an internal wall **292** in the vicinity of the transformer **232** with a gap **293** below the wall **292** and/or openings **293** positioned at the lower end of the wall **292**. Such a wall **292** may serve to direct the airstream **209** downward after the airstream **209** exits the power cell assembly **240** such that the majority of the airstream **209** enters the transformer **232** from the bottom of the transformer **232**. In such forms, the airstream **209** may flow upward through the transformer **232** and exit via the top of the transformer **232**, from which location the airstream **209** may be directed to the exhaust port **228** by the exhaust blower **254**.

[0106] With additional reference to FIG. **12**, the illustrated junction panel **260** generally includes a medium-voltage connector **262**, a low-voltage connector **264**, and a communication cable connector **266**. The medium-voltage connector **262** is configured for connection with the medium-voltage power line **101**, and is connected with the medium-voltage VFD **132** such that the medium-voltage VFD **132** is operable to receive power from the medium-voltage power line **101** via the junction panel **260**. The low-voltage connector **264** is configured for connection with the low-voltage power line **102**, and is connected with the ventilation control system **250** such that the ventilation control system **250** is operable to receive power from the low-voltage power line **102** via the junction panel **260**. The low-voltage connector **264** may further be connected with auxiliary systems of the electric motor **134** and/or auxiliary systems of the hydraulic pump **136** such that the auxiliary systems are operable to receive power from the low-voltage power line **102** via the junction panel **260**. The communication cable connector **266** is configured for connection with the communication cable **103**, and is connected with the medium-voltage VFD **132** such that the medium-voltage VFD **132** is operable to receive electrical signals and/or commands via the junction panel **260**.

[0107] In certain embodiments, the medium-voltage connector **262** and the low-voltage connector **264** may be of different sizes, different shapes, and/or different configurations such that the medium-voltage line **101** cannot couple with the low-voltage connector **264** and the low-voltage line **102** cannot couple with the medium-voltage connector **262**. In certain forms, the power distribution system **120** may include a plurality of junction panels along the lines of the junction panel **260**, with each junction panel of the power distribution system **120** corresponding to a respective one of the pump configurations **130*a*-130*n***.

[0108] With additional reference to FIG. **13**, illustrated therein is an example of a vibration damping coupler **300** that may be utilized in connection with certain embodiments. In certain embodiments, the vibration damping couplers **237** of the transformer assembly **230** may be provided along the lines of the vibration damping coupler **300**. In certain embodiments, the vibration damping couplers **247** of the power cell assembly **240** may be provided along the lines of the vibration damping coupler **300**. The illustrated vibration damping coupler **300** generally includes a vibration damper **310**, a bolt **320**, and a nut **330**, and may further include one or more washers **340**.

[0109] The vibration damper **310** generally includes a first portion **312** and a second portion **314** separable from the first portion **312**, and an aperture **318** extends through the first portion **312** and the second portion **314**. The first portion **312** includes a shoulder **313** that faces the second portion **314**. The second portion **314** also includes a shoulder **315** that faces the first portion **312**, and further includes a neck **316**. The vibration damper **310** is formed of a vibration-damping material that is softer or more pliant than the metal of the cabin floor **210** and the frames **234**, **244**, and is thereby operable to reduce the transmission of vibrations between the cabin floor **210** and the frames **234**, **244**. In certain embodiments, the vibration damper **310** may be formed of an elastic material, a rubber, a plastic, and/or another form of vibration damping material.

[0110] The bolt **320** is sized and shaped to extend through the vibration damper **310** and the washers **340**, and includes a threaded portion **322** configured to engage internal threads **332** of the nut **330**. In the illustrated form, a first washer **340** is positioned between a head **324** of the bolt **320** and the outer face of the first portion **312**, and a second washer **340** is positioned between the nut **330** and the outer face of the second portion **314**.

[0111] With additional reference to FIG. **14**, in certain embodiments, the vibration damping couplers **247** of the vibration damping assembly **246** of the power cell assembly **240** may be provided along the lines of the vibration damping coupler **300**. By way of illustration, the first portion **312** may be positioned between the power cell assembly frame **244** and a floor panel **212** of the cabin floor **210** such that the aperture **318** aligns with apertures in the first washer **340**, the frame **244**, and the floor panel **212**. Similarly, the second portion **314** may be positioned on an opposite lower side of the floor **210** (e.g., within a reinforcing channel **214** of the cabin floor **210**) such that the aperture **318** formed in the second portion **314** aligns with the aperture **318** formed in the first portion **312**. The bolt **320** may then be inserted through the aligned apertures and engaged with the nut **330**. The nut **330** and bolt **320** may then be tightened such that the first portion **312** is captured between the frame **244** and the floor **210** while the second portion **314** is captured between the nut **330** and the floor **210**.

[0112] In the configuration illustrated in FIG. **14**, the first portion **312** is captured between the frame **244** and the floor **210**, and the second portion **314** is captured between the nut **330** and the floor **210**. As a result, neither the metal of the coupled nut-bolt combination nor the metal of the frame **244** directly contacts the metal of the floor **210**, but is instead isolated from the floor **210** by the material of the damper

310. The damper **310** is formed of a relatively soft material in comparison to the relatively hard metal of the floor **210** and the frame **244**, and the material of the damper **310** is selected to dampen vibrations that would otherwise be transmitted from the floor **210** to the frame **244**. In certain embodiments, the damper **310** may be formed of an elastic material, such as an elastomer or rubber. In certain embodiments, the damper **310** may be provided as a spring.

[0113] In certain embodiments, the vibration damping couplers **237** of the vibration damping assembly **236** of the transformer assembly **230** may be provided along the lines of the vibration damping coupler **300**. Those skilled in the art will readily appreciate that in such forms, the vibration damping couplers **237**/**300** may be utilized to couple the transformer assembly frame **234** to the cabin floor **210** in a manner analogous to that described above with reference to the coupling of the power cell assembly frame **242** to the floor **210** by the vibration damping couplers **247**. In certain embodiments, the intake blowers **252** of the ventilation system **250** may be mounted to the cabin floor **210** via one or more additional vibration damping couplers **259**, such as vibration damping couplers along the lines of the vibration damping coupler **300**.

[0114] Oftentimes, the transformer assembly **230** will be significantly heavier than the power cell assembly **240**. As such, it may be the case that the transformer assembly **230** and the power cell assembly **240** have different vibrational characteristics and/or different support requirements. In order to accommodate these differences, the overall stiffness of the vibration damping assembly **236** of the transformer assembly **230** may be greater than the overall stiffness of the vibration damping assembly **246** of the power cell assembly **240**. Similarly, should the intake blowers **252** be mounted to the cabin floor **210** via vibration damping couplers **259**, the overall stiffness of the vibration damping couplers **259** coupling the blowers **252** to the cabin floor may be less than the overall stiffness of the vibration damping couplers **237** coupling the transformer assembly **230** to the cabin floor **210**.

[0115] As noted above, in certain embodiments, the VFD cabin **200** is mounted directly to the trailer **131** without an intervening suspension. For example, the VFD cabin **200** may be mounted to the trailer **131** via bolts and/or welding. This is in contrast to certain existing VFD cabins, which required the intervening suspension for reasons described above. In the current VFD cabin **200**, however, the need for the intervening suspension is reduced or eliminated due to the provision of the vibration damping couplers. In addition to reducing costs by obviating the need for the more-expensive suspension, the use of vibration damping couplers allows for each component or subassembly of the cabin **200** to be mounted to the cabin floor **210** via a vibration damping assembly having vibration damping characteristics (e.g., stiffness) tailored to the needs of the particular component or subassembly. For example, as noted above, the transformer assembly **230** may be mounted to the cabin floor **210** via a vibration damping assembly **236** having a first overall stiffness, the power cell assembly **240** may be mounted to the cabin floor **210** via a vibration damping assembly **236** having a second overall stiffness, and the first overall stiffness may be greater than the second overall stiffness to account for the greater mass of the transformer assembly **230** in comparison to the power cell assembly **240**.

[0116] As noted above, the vibration damping assemblies described herein may aid in isolating the operating components of the cabin **200** from the cabin floor **210** during times of transport, when the pump configuration **130** is not operating to pump the fracking media. The vibration damping assemblies **236**, **246** may further aid in isolating the corresponding subsystems from vibration of the cabin floor **210** during operation of the pump configuration **130**, which may entail significant vibrations due to the operation of the motor **134** and the pump **136**. This damping of vibrations can be a significant factor in reducing the flexing of the metal components of the medium-voltage VFD **132**. In the medium-voltage environment within the cabin **200**, such flexing can result in electrical arcing, which can result in short circuit conditions and/or damage to the components of the cabin **200**. Thus, the vibration damping assemblies may aid in protecting the VFD **132** not only from mechanical shock damage during transport, but also from electrical shock damage during operation.

[0117] With additional reference to FIG. **15**, certain embodiments of the present application relate to a process **400** for manufacturing a VFD cabin and/or a pump configuration including such a VFD cabin. Blocks illustrated for the processes in the present application are understood to be examples only, and blocks may be combined or divided, and added or removed, as well as re-ordered in whole or in part, unless explicitly stated to the contrary. Additionally, while the blocks are illustrated in a relatively serial fashion, it is to be understood that two or more of the blocks may be performed concurrently or in parallel with one another. Moreover, while the process **400** will be described with specific reference to the above-described VFD cabin **200** and pump configuration **130**, it is to be appreciated that the process **400** may be performed to manufacture a VFD cabin and/or a pump configuration having additional or alternative features. By way of illustration, although the process **400** is described as being performed to manufacture the above-described VFD cabin **200** and pump configuration **130**, the process **500** may additionally or alternatively be performed to manufacture the VFD cabin **700** and pump configuration **630** described below with reference to FIGS. **17**-**22**.

[0118] The process **400** generally includes a an enclosing mounting procedure **410**, procedure **420**, and an installation procedure **430**. As described herein, the mounting procedure **410** generally involves mounting a plurality of operational components to a cabin floor, the enclosing procedure **420** generally involves installing a cabin cap to the cabin floor to thereby enclose the cabin, and the installation procedure **430** generally includes installing the cabin and/or additional components to a mobile trailer.

[0119] The process **400** may include a mounting procedure **410**, which generally involves mounting a plurality of operational components to a cabin floor, such as the cabin floor **210**. The illustrated mounting procedure **410** includes block **412**, which generally involves mounting a transformer to a cabin floor via a first vibration damping assembly. In certain embodiments, block **412** may involve mounting the transformer **232** to the cabin floor **210** via the vibration damping assembly **236**. Given the mass of the transformer **232**, block **412** may, for example, involve lifting the transformer **232** into position on the cabin floor **210** using a crane. Due to the fact that the cap **220** is not yet installed, the crane will be able to lift the transformer **232** into position without having to negotiate certain obstacles that would otherwise be pres-

ent (e.g., a roof and/or sidewalls of the cabin). With the transformer **232** in position, the frame **234** to which the transformer **232** is mounted may be secured to the cabin floor **210** via the vibration damping assembly **236**. As noted above, the vibration damping assembly **236** may include a plurality of vibration damping couplers **237**, such as the vibration damping couplers **300**.

[0120] The illustrated mounting procedure **410** further includes block **414**, which generally involves mounting a power cell assembly to the cabin floor via a second vibration damping assembly. In certain embodiments, block **414** may involve mounting the plurality of power cells **242** to the cabin floor **210** via the vibration damping assembly **246**. In certain embodiments, block **414** may involve mounting the frame **244** to the floor **210** via the vibration damping assembly **246** prior to installing the power cells **242**. The power cells **242** may, for example, be installed to the frame **244** via slide rails **245** that facilitate installation and removal of individual power cells **242** to the frame **244**. As noted above, the vibration damping assembly **246** may include a plurality of vibration damping couplers **247**, such as the vibration damping couplers **300**. Additionally, the overall stiffness of the first vibration damping assembly **236** coupling the transformer **232** to the cabin floor **210** may be greater than the overall stiffness of the second vibration damping assembly **246** coupling the power cells **242** to the cabin floor **210**.

[0121] The illustrated mounting procedure **410** further includes block **416**, which generally involves mounting one or more intake blowers to the cabin floor via a third vibration damping assembly. For example, block **416** may involve mounting the intake blower(s) **252** to the cabin floor **210** via the vibration damping couplers **259**. In certain embodiments, the vibration damping couplers **259** may be provided along the lines of the above-described vibration damping coupler **300**. In certain embodiments, an overall stiffness of the third vibration damping assembly may be less than the overall stiffnesses of the first and second vibration damping assemblies **236**, **246**.

[0122] As should be appreciated, the mounting procedure **410** may further include mounting various other components and/or subsystems to the cabin floor **210**, whether that be with or without vibration damping couplers. As one example, the mounting procedure **410** may involve installing the filtration unit **251** to the cabin floor **210** at a location that will be adjacent the intake port **227** when the cap **220** is subsequently installed. The mounting procedure **410** may additionally or alternatively involve mounting one or more components or subsystems to the cabin cap **220** prior to installing the cap **220**. For example, the mounting procedure **410** may involve installing the low-voltage VFD closet **229** and/or the exhaust blower(s) **254** to the cabin cap **220** prior to installing the cabin cap **220**. It is also contemplated that the low-voltage VFD closet **229** and/or the exhaust blower (s) **254** may be installed to the cabin **200** subsequent to installing the cabin cap **220**.

[0123] The process **400** may include the enclosing procedure **420**, which generally involves installing a cabin cap to the cabin floor to thereby enclose the cabin. In the illustrated form, the enclosing procedure **420** includes block **422**, which generally involves lowering a pre-formed cabin cap onto the cabin floor to thereby enclose the installed components within the cabin. For example, block **422** may involve hoisting the pre-formed cabin cap **220** into position on the cabin floor **210** using a crane or similar lifting apparatus.

[0124] The enclosing procedure **420** may further include block **424**, which generally involves securing the cabin cap **220** to the cabin floor **210**. In certain embodiments, block **424** may involve removably securing the cabin cap **220** to the cabin floor **210** (e.g., using bolts, screws, clasps, clamps, and/or another form of releasable fastener) to facilitate removal of the cap **220** in the event that the components internal to the cabin **200** require removal, maintenance, or replacement. In other embodiments, block **424** may involve permanently securing the cap **220** to the floor **210**, for example via welding.

[0125] In the illustrated form, the enclosing procedure **420** involves lowering a pre-formed cabin cap **220** onto the cabin floor **210** to thereby enclose the cabin **200**. It is also contemplated that the cabin **200** may be enclosed in another manner. As one example, the cap **220** may not necessarily be pre-formed, and may instead be built from the cabin floor **210** up.

[0126] The process **400** may further include the installation procedure **430**, which generally includes installing the cabin and/or additional components to a mobile trailer. The installation procedure **430** may include block **432**, which generally involves installing the cabin to a mobile trailer. For example, block **432** may involve installing the cabin **200** to a mobile trailer **131** suitable for connection with a semi-truck or tractor. In the illustrated form, block **432** involves directly coupling the cabin **200** to the mobile trailer **131** without an intervening suspension being installed between the cabin **200** and the chassis of the trailer **131**. By way of example, block **432** may involve bolting and/or welding the cabin floor **210** to the chassis of the mobile trailer **131**. It is also contemplated that block **432** may involve indirectly mounting the cabin **200** to the trailer **131**, for example via an intervening suspension. However, such intervening suspensions may be obviated in certain embodiments for the reasons noted above.

[0127] The installation procedure **430** may further include block **434**, which generally involves installing an electric motor to the mobile trailer. For example, block **434** may involve installing a single, single-shaft electric motor **134** to the mobile trailer **131**. In certain embodiments, block **434** may involve mounting the electric motor **134** directly to the mobile trailer **131** (i.e., without any intervening suspension and/or vibration isolating components). In other embodiments, block **434** may involve indirectly mounting the electric motor **134** to the trailer **131** (e.g., via a suspension and/or vibration damping components). As should be appreciated, block **434** may further involve connecting the motor **134** to the medium-voltage VFD **132** such that the VFD **132** is operable to control operation of the motor **134** using power received via the medium-voltage power line **102**. Block **434** may further include connecting auxiliary systems of the motor **134** with a power line connected to the junction panel **260** such that the auxiliary systems of the motor **134** are operable to receive electrical power from the low-voltage power line **102**.

[0128] The installation procedure **430** may further include block **436**, which generally involves installing a single hydraulic pump to the mobile trailer. For example, block **436** may involve installing the hydraulic pump **136** to the mobile trailer **131**. In certain embodiments, block **436** may involve

mounting the hydraulic pump **136** directly to the mobile trailer **131** (i.e., without any intervening suspension and/or vibration isolating components). In other embodiments, block **436** may involve indirectly mounting the hydraulic pump **136** to the trailer **131** (e.g., via a suspension and/or vibration damping components). As should be appreciated, block **436** may further involve connecting the hydraulic pump **136** to the single shaft **135** of the electric motor **134** such that the motor **134** is operable to drive the hydraulic pump **136** under control of the medium-voltage VFD **132**. Block **436** may further include connecting auxiliary systems of the pump **136** with a power line connected to the junction panel **260** such that the auxiliary systems of the pump **136** are operable to receive electrical power from the low-voltage power line **102**.

[0129] While not specifically illustrated in FIG. **15**, it should be appreciated that the process **400** may include additional or alternative blocks, operations, and/or procedures that may be necessary or desired for the manufacture of a cabin **200** and/or a pump configuration **130** including such a cabin. By way of example, the process **400** may involve installing dedicated temperature sensors **249** and/or dedicated cooling fans **258** to the power cell assembly **240**. As another example, the process **400** may involve forming the cabin cap **220** and/or connecting the ventilation control system **256** to the blowers **252**, **254** and/or the cooling fans **258**. Those skilled in the art, upon reading the detailed descriptions regarding the pump configuration **130** and the cabin **200**, will readily recognize various other steps that may be taken to manufacture a VFD cabin **200** and/or a pump configuration **130** including the same.

[0130] With additional reference to FIG. **16**, certain embodiments of the present application relate to a process **500** for conducting a fracking operation. Blocks illustrated for the processes in the present application are understood to be examples only, and blocks may be combined or divided, and added or removed, as well as re-ordered in whole or in part, unless explicitly stated to the contrary. Additionally, while the blocks are illustrated in a relatively serial fashion, it is to be understood that two or more of the blocks may be performed concurrently or in parallel with one another. Moreover, while the process **500** will be described with specific reference to the fracking operation **100** described above, it is to be appreciated that the process **500** may be performed to conduct a fracking operation having additional or alternative features. By way of illustration, although the process **500** is described as being performed utilizing the above-described pump configuration **130**, certain portions of the process **500** may additionally or alternatively be performed using the pump configuration **630** described below with reference to FIGS. **17-22**.

[0131] The illustrated process **500** generally involves a power generation procedure **510**, a power distribution procedure **520**, a pumping procedure **530**, and a fracking procedure **540**. As described in further detail herein, the power generation procedure **510** generally involves generating electric power at an initial voltage level, the power distribution procedure **520** generally involves distributing electric power to one or more pump configurations, the pumping procedure **530** generally involves using the distributed electric power to pump a fracking media, and the fracking procedure **540** generally involves using the fracking media to extract fluid from a fracking well **109**.

[0132] Certain embodiments of the process **500** may involve a power generation procedure **510**, which generally involves generating electric power at an initial voltage level in the medium-voltage range and an initial power level in the megawatt range. The power generation procedure **510** may, for example, be performed using the power generation system **110** described above. It is also contemplated that the process **500** may not necessarily include the power generation procedure **510**, for example in embodiments in which electric power is supplied to the fracking operation **100** from a power grid (e.g., via direct connection with a substation). Furthermore, while the power generation procedure **510** is described as being performed with gas turbine engines **112**, **114**, it is also contemplated that other sources of electric power may be utilized.

[0133] The power generation procedure **510** may include block **512**, which generally involves generating a first portion of the electric power using a first power source, such as a first gas turbine engine. Block **512** may, for example, involve operating the first gas turbine engine **112** to generate the first portion of the electric power at the initial voltage level in the medium-voltage range. In certain embodiments, block **512** may involve operating the first gas turbine engine **112** to generate power in a range of about 12 MW or greater. In certain embodiments, block **512** may involve operating the first gas turbine engine **112** to generate power in a range of about 12 MW to about 16 MW. In certain embodiments, the fuel for operating the first gas turbine engine **112** may be provided at least in part as fluid extracted from the fracking well **109** associated with the fracking operation **100**.

[0134] The power generation procedure **510** may include block **514**, which generally involves generating a second portion of the electric power using a second power source, such as a second gas turbine engine. Block **514** may, for example, involve operating the second gas turbine engine **114** to generate the second portion of the electric power at the initial voltage level in the medium-voltage range. In certain embodiments, block **514** may involve operating the second gas turbine engine **114** to generate power in a range of about 12 MW or greater. In certain embodiments, block **514** may involve operating the second gas turbine engine **114** to generate power in a range of about 12 MW to about 16 MW. In certain embodiments, the fuel for operating the second gas turbine engine **114** may be provided at least in part as fluid extracted from the fracking well **109** associated with the fracking operation **100**.

[0135] The power generation procedure **510** further includes block **516**, which generally involves supplying the electric power at the initial voltage level to a power distribution system. Block **516** may, for example, involve supplying the electric power at the initial voltage level from the power generation system **110** to the power distribution system **120**. In certain embodiments, the power supplied to the power distribution system **120** includes the first power generated by the first power source (e.g., the first gas turbine engine **112**) and the second power generated by the second power source (e.g., the gas turbine engine **114**). In certain embodiments, the power supplied to the power distribution system **120** is about 24 MW or greater. In certain embodiments, the power supplied to the power distribution system **120** is in the range of about 24 MW to about 36 MW. In certain embodiments, the power generation system **110** may generate the electric power at an initial voltage level of about 5 kV to about 15 kV. In certain embodiments, the initial

voltage may be provided in the range of 12.5 kV±about 10%. In certain embodiments, the initial voltage may be provided in the range of about 10 kV to about 15 kV. In certain embodiments, the initial voltage may be provided in the range of about 11.8 kV to about 14.5 kV. In certain embodiments, the initial voltage may be provided as about 13.8 kV or greater. It is also contemplated that other voltage levels and/or ranges may be utilized in block **516**.

[0136] The power generation procedure **510** may further include one or more steps or operations not specifically illustrated in FIG. **16**. For example, the power generation procedure **510** may involve providing redundancy in the generation of electric power in that the first power source (e.g., the first gas turbine engine **112**) may continue to supply the first portion of the electric power in the event of a short-circuit condition experienced by the second power source (e.g., the second gas turbine engine **114**), and in that the second power source (e.g., the second gas turbine engine **114**) may continue to supply the second portion of the electric power in the event of a short-circuit condition experienced by the first power source (e.g., the first gas turbine engine **112**). Additionally, while the illustrated form of the power generation procedure **510** involves generating the electric power via a pair of gas turbine engines **112**, **114** positioned on a single trailer **111**, it is also contemplated that the power generation procedure **510** may involve generating power in another manner (e.g., with more or fewer gas turbine engines and/or additional or alternative power sources for generating electric power).

[0137] Certain embodiments of the process **500** include a power distribution procedure **520**, which generally involves distributing electric power to one or more pump configurations. The power distribution procedure **520** may, for example, be performed by or using the power distribution system **120** described above. In certain embodiments, the power distribution procedure **520** may be performed in conjunction with the power generation procedure **510** described above. In other embodiments, the power distributed in the power distribution procedure **520** may be generated in another manner. As one example, the power distributed in the power distribution procedure **520** may be received from a power grid (e.g. via direct connection with a substation).

[0138] The power distribution procedure **520** may include block **522**, which generally involves receiving, at a power distribution system, electric power at an initial voltage level. Block **522** may, for example, involve receiving power at the mobile power distribution system **120**, such as from the power generation system **110** or the electrical grid. In certain embodiments, the power received in block **522** may be power at an initial voltage level of about 5 kV to about 15 kV. In certain embodiments, the power received in block **522** may be in the range of 12.5 kV±about 10%. In certain embodiments, the power received in block **522** may be in the range of about 10 kV to about 15 kV. In certain embodiments, the power received in block **522** may be provided in the range of about 11.8 kV to about 14.5 kV. In certain embodiments, the power received in block **522** may be about 13.8 kV or greater. In certain embodiments, the power received in block **522** may be in the 15 kV class. It is also contemplated that other voltage levels and/or ranges may be utilized in block **522**.

[0139] The power distribution procedure **520** may include block **524**, which generally involves distributing medium-voltage electric power to one or more pump configurations. Block **524** may, for example, involve distributing electric power at the initial voltage level to one or more pump configurations **130** via one or more medium-voltage power lines **101**. In certain embodiments, the medium-voltage power distributed in block **524** may be power at an initial voltage level of about 5 kV to about 15 kV. In certain embodiments, the medium-voltage power distributed in block **524** may be in the range of 12.5 kV±about 10%. In certain embodiments, the medium-voltage power distributed in block **524** may be in the range of about 10 kV to about 15 kV. In certain embodiments, the medium-voltage power distributed in block **524** may be in the range of about 11.8 kV to about 14.5 kV. In certain embodiments, the medium-voltage power distributed in block **524** may be about 13.8 kV or greater. It is also contemplated that other voltage levels and/or ranges may be utilized in block **524**. In certain embodiments, block **524** may involve distributing the medium-voltage power via a switchgear arrangement such as that described in the above-referenced U.S. patent application Ser. No. 16/790,538.

[0140] The power distribution procedure **520** may include block **526**, which generally involves converting a portion of the received power to low-voltage electric power. Block **524** may, for example, involve operating one or more transformers of the power distribution system **120** to convert a portion of the power received at the initial voltage level to power at a low-voltage voltage level. In certain embodiments, block **524** may involve converting the portion of the electric power from the initial medium-voltage voltage level to a low-voltage voltage level less than 1.0 kV. In certain embodiments, the low-voltage voltage level may be about 480V. It is also contemplated that other low-voltage voltage levels and/or ranges may be utilized in block **526**.

[0141] The power distribution procedure **520** may include block **528**, which generally involves distributing low-voltage electric power to one or more pump configurations. Block **528** may, for example, involve distributing electric power at the low-voltage voltage level to the plurality of pump configurations **130*a*-130*n*** via one or more low-voltage power lines **102**. In certain embodiments, block **528** may further involve distributing low-voltage power to one or more auxiliary systems **190**. In certain embodiments, block **528** may involve distributing the low-voltage power via a switchgear arrangement such as that described in the above-referenced U.S. patent application Ser. No. 16/790,538.

[0142] The power distribution procedure **520** may further include one or more blocks, steps, or operations not specifically illustrated in FIG. **16**. As one example, the power distribution procedure **520** may involve distributing medium-voltage power to one or more auxiliary systems **190**. For example, should the auxiliary system(s) **190** include a blending unit that blends the fracking media provided to the hydraulic pumps **136**, the power distribution procedure **520** may involve distributing power to the blending unit at a voltage that is suitable for use by the blending unit, such as power of about 4160V.

[0143] As another example, the procedure **520** may involve transmitting information to the one or more pump configurations **130** and/or receiving information from the one or more pump configurations **130**. In certain embodiments, such communication may be performed via a wired connection, such as the communications cable **103**. In certain embodiments, such communication may be per-

formed via a wireless connection, such as those described above. In certain embodiments, the information communicated between the power distribution system **120** and the pump configurations **130** may relate to the control of the pump configurations **130**. By way of example, if information received from one pump configuration **130** *a* indicates that the pump configuration **130** *a* is performing sub-optimally (e.g., is pumping the fracking media at a sub-optimal level), the power distribution system **120** may cause one or more of the remaining pump configurations **130** *b*-**130** *n* to operate at a higher HP level to ensure that the total pumping power provided to the fracking system **140** remains at a desired overall HP level. In certain embodiments, the power distribution system **120** may include a control system that provides for such control of the pump configurations **130**. In certain embodiments, the power distribution system **120** may control the pump configurations under the control of a control system **180**, which may be positioned at the fracking site or remote from the fracking site.

[0144] Certain embodiments of the process **500** include a pumping procedure **530**, which generally involves using electric power to pump a fracking media. The pumping procedure **530** may, for example, be performed by or with one or more pump configurations **130** along the lines set forth above. In certain embodiments, the pumping procedure **530** may be performed in conjunction with the power generation procedure **510**. Additionally or alternatively, the pumping procedure **530** may be performed using power that was generated in a manner other than that described with reference to the power generation procedure **510**. In certain embodiments, the pumping procedure **530** may be performed in conjunction with the power distribution procedure **520**. Additionally or alternatively, the pumping procedure **530** may be performed using power that has been provided to the pump configurations **130** in another manner. In certain embodiments, the pumping procedure **530** may be performed using a single pump configuration **130**. In other embodiments, the pumping procedure **530** may be performed concurrently by multiple pump configurations **130***a*-**130***n*.

[0145] The pumping procedure **530** may include block **532**, which generally involves converting electric power at the initial voltage level to electric power at a VFD voltage level. Block **532** may, for example, be performed by or using the medium-voltage VFD **132**. In certain embodiments, block **532** involves converting, by the transformer **232**, the electric power at the initial voltage level to electric power at a transformer voltage level, and converting, by the plurality of power cells **242**, the electric power at the transformer voltage level to electric power at the VFD voltage level. In certain embodiments, block **532** may involve converting electric power from the initial voltage level to the VFD voltage level in the manner along the lines of that described in the above-referenced U.S. patent application Ser. No. 16/790,581. In certain embodiments, the VFD voltage level may be less than the initial voltage level. In certain embodiments, the VFD voltage level may be a voltage level between the initial voltage level and the transformer voltage level. In certain embodiments, the VFD voltage level may be a medium-voltage voltage level. In certain embodiments, the VFD voltage level may be about 2.5 kV or greater. In certain embodiments, the VFD voltage level may be about 4.16 kV or greater. In certain embodiments, the VFD voltage level may be about 4.16 kV to about 6.6 kV. It is also contemplated that other VFD voltage levels and/or ranges may be utilized in block **532**.

[0146] The pumping procedure **530** may include block **534**, which generally involves generating motive power using the electric power at the VFD voltage level (e.g., the electric power converted to the VFD voltage level in block **532**). Block **534** may, for example, be performed by or using the single-shaft electric motor **134**. More particularly, block **534** may involve causing the single-shaft electric motor **134** to rotate at an RPM level in response to receiving the electric power at the VFD voltage level. In certain embodiments, the RPM level at which the motor **134** rotates in response to receiving the electric power at the VFD voltage level is about 750 RPM, or about 750 RPM or greater. In certain embodiments, the RPM level at which the motor **134** rotates in response to receiving the electric power at the VFD voltage level is in a range of about 500 RPM to about 1000 RPM. In certain embodiments, the RPM level at which the motor **134** rotates in response to receiving the electric power at the VFD voltage level is in a range of about 750 RPM to about 1500 RPM. It is also contemplated that other RPM levels and/or ranges may be utilized in block **534**.

[0147] The pumping procedure **530** may include block **536**, which generally involves pumping fracking media, for example using the motive power generated in block **534**. Block **536** may, for example, be performed by or using the hydraulic pump **136**. More particularly, block **536** may involve causing the hydraulic pump **136** to pump the fracking media at a HP level in response to rotation of the motor **134** at the RPM level. In certain embodiments, the HP level for each hydraulic pump **136** is about 5000 HP, or about 5000 HP or greater. In certain embodiments, the HP level for each hydraulic pump **136** is in a range of 4000 HP to 6000 HP. In certain embodiments, the HP level for each hydraulic pump **136** is at least 3000 HP. It is also contemplated that other HP levels and/or ranges may be utilized in block **536**. In certain embodiments, block **536** may involve operating one or more of the hydraulic pumps **136** on a continuous duty cycle to continuously pump fracking media into the fracking well **109**.

[0148] The pumping procedure **530** may include block **538**, which generally involves operating a ventilation system to cool the medium-voltage VFD **132**. Block **538** may, for example, be performed by or using the ventilation system **250**. In certain embodiments, block **538** may involve operating the ventilation system **250** using power received via the low-voltage line **102**. In certain embodiments, block **538** may involve operating plural low-voltage VFDs **257** to operate blowers **252**, **254** by which air is introduced to and discharged from the cabin **200**. In certain embodiments, block **538** may involve controlling the speed of the blowers **252**, **254** based upon a temperature within the cabin **200**. In certain embodiments, block **538** may involve operating the intake blower(s) **252** to generate an intake CFM, and operating the exhaust blower(s) **254** to generate an exhaust CFM that is lower than the intake CFM such that an overpressure condition is created within the cabin **200**. In certain embodiments, block **538** may involve generating an airstream **209** that flows from the intake port **227**, through the filtration unit **251** under control of the intake blower **252**, and across the medium-voltage VFD **132**. In certain embodiments, the power cell assembly **240** may be positioned in the airstream **209** upstream of the transformer assembly **230**, and the

transformer assembly **230** may be positioned in the airstream **209** downstream of the power cell assembly **240**. In certain embodiments, block **538** may involve operating dedicated cooling fans **258** to blow air over and/or through the individual power cells **242**. In certain embodiments, the speed of the dedicated cooling fans **258** may be controlled based upon the temperature of the corresponding power cell **242**, which temperature may be sensed by the dedicated temperature sensors **249**.

[0149] The pumping procedure **530** may further include one or more steps or operations not specifically illustrated in FIG. **16**. For example, low-voltage auxiliary power may be distributed from the low-voltage power line **102** in order to power auxiliary systems of the medium-voltage VFD **132**, auxiliary systems of the motor **134**, auxiliary systems of the hydraulic pump **136**, auxiliary systems of the cabin **200**, and/or auxiliary systems of the pump configuration **130**.

[0150] Certain embodiments of the process **500** include a fracking procedure **540**, which generally involves using the fracking media to extract fluid from a fracking well **109**. The fracking procedure **540** may, for example, be performed by or using the fracking system **140** using fracking media pumped by the one or more pump configurations **130***a*-**130***n*.

[0151] The fracking procedure **540** may include block **542**, which generally involves pumping a fracking media into a fracking well **109**. Block **542** may, for example, be performed by or using the fracking equipment **142**. In certain embodiments, block **542** may involve continuously pumping the fracking media at an overall HP level corresponding to the sum of the HP levels provided by the plural single-pump pump configurations **130***a*-**130***n*, each of which includes a single hydraulic pump **136** that may operate continuously at the HP level for which the pump **136** is rated. In certain embodiments, the overall HP level is about 40,0001 HP, or about 40,000 HP or greater. In certain embodiments, the overall HP level is between about 30,000 HP and about 50,000 HP. It is also contemplated that other overall HP levels and/or ranges may be utilized in block **542**.

[0152] The fracking procedure **540** may include block **544**, which generally involves extracting a fluid from the fracking well **109**. Block **544** may, for example, be performed by or using the fracking equipment **142**. The extracted fluid may then be stored and/or distributed. In certain embodiments, a portion of the extracted fluid may be fed back to the power generation system **110**, for example in embodiments of the process that involve performing the power generation procedure **510** on-site. In such forms, the extracted fluid may be utilized to power one or both of the gas turbine engines **112**, **114**.

[0153] It is to be appreciated that the process **500** may include additional or alternative blocks or operations not specifically illustrated in FIG. **16**. For example, the power distribution procedure **520** may further involve distributing low-voltage electric power and/or medium-voltage electric power to one or more auxiliary systems **190**, and the process **500** may involve operating such auxiliary systems **190**. As one example, the auxiliary system **190** may include a hydration system, and the process **500** may involve operating the hydration system to provide adequate hydration to the fracking media as the hydraulic pumps **136** continuously pump the fracking media into the fracking well **109**. As further examples, the auxiliary system(s) **190** may include chemical additive systems, blending systems, mixing systems and/or any other type of system that is required or desired at the fracking site, and the process **500** may involve operating such auxiliary systems **190** using power generated in the power generation procedure **510** and/or distributed in the power distribution procedure **520**. Those skilled in the art, upon reading the detailed descriptions regarding the fracking operation **100** and the components and subsystems thereof, will readily recognize various other steps that may be taken during performance of the process **500**.

[0154] With additional reference to FIG. **17**, illustrated therein is a pump configuration **630** according to certain embodiments. The pump configuration **630** is an alternative embodiment of the pump configuration **130**, and similar reference characters are used to indicate similar elements and features. For example, the pump configuration **630** generally includes a pump trailer **631**, a medium-voltage VFD **632**, a single, single-shaft electric motor **634**, and a single hydraulic pump (not illustrated), which respectively correspond to the above-described trailer **131**, VFD **132**, motor **134**, and pump **136**, and which need not be described in further detail herein. The pump configuration **630** may, for example, be utilized in place of the pump configuration **130** in the system **100** and/or the process **500**, and may, for example, be manufactured according to the process **400**. In the interest of conciseness, the following description of the pump configuration **630** focuses primarily on elements and features that differ from those described above with respect to the pump configuration **130** and/or are shown in greater detail in FIGS. **17**-**22** than the corresponding features are illustrated in FIGS. **3**-**14**.

[0155] With additional reference to FIG. **18**, as in the pump configuration **130**, the medium-voltage VFD **632** is provided within a VFD cabin **700**. The VFD cabin **700** is an alternative embodiment of the VFD cabin **200**, and similar reference characters are used to indicate similar elements and features. For example, the VFD cabin **700** generally includes a housing **702** including a floor **710** and a cap **720**, a transformer assembly **730**, a power cell assembly **740**, a ventilation system **750**, and a junction panel **760**, which respectively correspond to the above-described housing **202**, floor **210**, cap **220**, transformer assembly **230**, power cell assembly **240**, ventilation system **250**, and junction panel **260**. The VFD cabin **700** may, for example, be utilized in place of the VFD cabin **200** in the system **100** and/or the process **500**, and may, for example, be manufactured according to the process **400**. In the interest of conciseness, the following description of the VFD cabin **700** focuses primarily on elements and features that differ from those described above with respect to the VFD cabin **200** and/or are shown in greater detail in FIGS. **17**-**22** than the corresponding features are illustrated in FIGS. **3**-**14**. It should be appreciated that elements and features described in connection with only one of the VFD cabins **200**, **700** may nonetheless be included in the other of the VFD cabins **200**, **700**.

[0156] With additional reference to FIG. **19**, in the illustrated form, the floor **710** is rigidly mounted to the trailer **631** without an intervening suspension being positioned between the floor **710** and the trailer **631**. For example, the floor **710** may be rigidly coupled to the trailer **631** via welds and/or bolts. In other embodiments, the floor **710** may be indirectly mounted to the trailer **631** via a suspension.

[0157] The cap **720** corresponds to the above-described cap **220**, and similar reference characters are used to indicate similar elements and features. For example, the cap **720** includes a plurality of sidewalls **721**, a roof **722**, a mainte-

nance door **724**, a cover door **726**, one or more intake ports **727**, one or more exhaust ports **728**, and a low-voltage VFD closet **729**, which respectively correspond to the sidewalls **221**, roof **222**, maintenance door **224**, cover door **226**, intake port(s) **227**, exhaust port(s) **228**, and a low-voltage VFD closet **229**. Unlike the VFD cabin **200**, in which the intake ports **226** and the exhaust ports **228** are respectively provided on the fore and aft end-walls, the intake port(s) **727** and the exhaust port(s) **728** are provided on the lateral sidewalls **721** of the cap **720**. More particularly, each lateral sidewall **721** includes an intake port **727** and an exhaust port **728** such that the intake ports **727** are positioned opposite one another near one end of the cabin **700** and the exhaust ports **728** are positioned opposite one another near the opposite end of the cabin **700**.

[0158] With additional reference to FIG. **20**, the transformer assembly **730** corresponds to the above-described transformer assembly **230**, and similar reference characters are used to indicate similar elements and features. For example, the transformer assembly **730** generally includes a transformer **732**, a transformer assembly frame **734**, and a vibration damping assembly **736** including a plurality of vibration damping couplers **737**, which respectively correspond to the transformer **232**, the transformer assembly frame **234**, and vibration damping assembly **236** including vibration damping couplers **237**.

[0159] In the illustrated form, the frame **734** includes an end wall **735** that terminates above the floor **710** such that a gap **739** is defined below the end wall **735**. This arrangement urges the airstream **709** to flow initially into the bottom of the transformer **732** and upward through the transformer **732** in a manner similar to that described above with reference to FIG. **11**. A wall **792** positioned between the transformer assembly **730** and the power cell assembly **740** may further aid in directing air to flow in this manner.

[0160] With additional reference to FIGS. **21** and **22**, the power cell assembly **740** corresponds to the above-described power cell assembly **240**, and similar reference characters are used to indicate similar elements and features. For example, the power cell assembly **740** generally includes a plurality of power cells **742**, a power cell assembly frame **744**, and a vibration damping assembly **746** including a plurality of vibration damping couplers **747**, which respectively correspond to the plurality of power cells **242**, the power cell assembly frame **244**, and the vibration damping assembly **246** including a plurality of vibration damping couplers **247**.

[0161] In the illustrated form, the power cell assembly **740** further includes an auxiliary frame **745**, and the primary frame **744** is coupled to the interior side of one of the sidewalls **721** via the auxiliary frame **745** to provide lateral support for the power cell assembly **740**. The auxiliary frame **745** may be connected to the primary frame **745** and/or the sidewall **721** via vibration damping couplers **747**. In the illustrated form, vibration damping couplers **747** are utilized to couple the auxiliary frame **745** to the primary frame **744**. Additionally or alternatively, vibration damping couplers **747** may be utilized to couple the auxiliary frame **745** to the sidewall **721**. As should be appreciated, the vibration damping couplers **747** may, for example, be provided in the form of the above-described vibration damping couplers **300**.

[0162] The ventilation system **750** corresponds to the above-described ventilation system **250**, and similar reference characters are used to indicate similar elements and features. For example, the ventilation system **750** generally includes one or more filtration units **751**, one or more intake blowers **752**, one or more exhaust blowers **754**, a ventilation control system **756**, and a plurality of dedicated cooling fans **758**, which respectively correspond to the above-described filtration unit(s) **251**, intake blower(s) **252**, exhaust blower (s) **254**, ventilation control system **256**, and dedicated cooling fans **258**.

[0163] With additional reference to FIG. **23**, illustrated therein is a block diagram of an electric driven hydraulic fracking system that provides an electric driven system to execute a fracking operation in that the electric power is consolidated in a power generation system and then distributed such that each component in the electric driven hydraulic fracking system is electrically powered. An electric driven hydraulic fracking system **800** includes a power generation system **810**, a power distribution trailer **820**, a plurality of pump trailers **830**(*a-n*), a plurality of single medium-voltage VFDs **840**(*a-n*), a switchgear configuration **805**, a plurality of trailer auxiliary systems **815**(*a-n*), a plurality of switchgears **825**(*a-n*), a switchgear transformer configuration **835**, and fracking equipment **870**.

[0164] Electric power is consolidated in the power generation system **810** and then distributed at the appropriate voltage levels by the power distribution trailer **820** to decrease the medium voltage cabling required to distribute the electric power. The single medium-voltage VFDs **840** (*a-n*) and the trailer auxiliary systems **815**(*a-n*) positioned on the pump trailers **830**(*a-n*) as well as the fracking control center **880** and auxiliary systems **890** are electrically powered by the electric power that is consolidated and generated by the power generation system **810**. The electric driven hydraulic fracking system **800** shares many similar features with the hydraulic fracking operation **100**. In the interest of conciseness, the following description focuses primarily on the differences between the electric driven hydraulic fracking system **800** and the hydraulic fracking operation **100**.

[0165] As noted above, the power generation system **810** may consolidate the electric power **850** that is generated for the electric driven hydraulic fracking system **800** such that the quantity and size of the power sources included in the power generation system **810** is decreased. As discussed above, the power generating system **810** may include numerous power sources as well as different power sources and any combination thereof. For example, the power generating system **810** may include power sources that include a quantity of gas turbine engines. In another example, the power generation system **810** may include a power source that includes an electric power plant that independently generates electric power for an electric utility grid. In another example, the power generation system **810** may include a combination of gas turbine engines and an electric power plant. The power generation system **810** may generate the electric power **850** at a power level and a voltage level. The voltage level at which the power generation system generates the electric power may be referred to herein as the initial voltage level and/or the power generation voltage level.

[0166] The power generation system **810** may generate electric power at a power generation voltage level in which the power generation voltage level is the voltage level that the power generation system is capable of generating the electric power **850**. For example, when the power sources of

the power generation system **810** include a quantity of gas turbine engines, the power generation system **810** may generate the electric power **850** at the voltage level of 13.8 kV, which is a typical voltage level for electric power **850** generated by gas turbine engines. In another example, when the power sources of the power generation system **810** include an electric power plant, the power generation system **810** may generate the electric power **850** at the voltage level of 12.47 kV, which is a typical voltage level for electric power **850** generated by an electric power plant.

[0167] In another example, the power generation system **810** may generate electric power **850** that is already at the VFD voltage level to power the single shaft electric motor as discussed in detail below. In such an example, the power generation system **810** may generate the electric power **850** that is already at a VFD voltage level of 4160V. In another example, the power generation system **810** may generate the electric power **850** at the power generation voltage level in range of 4160V to 15 kV. In another example, the power generation system **810** may generate electric power **850** at the power generation voltage level of up to 38 kV. The power generation system **810** may generate the electric power **850** at any power generation voltage level that is provided by the power sources included in the power generation system **810** that will be apparent to those skilled in the relevant art(s) without departing from the spirit and scope of the disclosure. The power generation system **810** may then provide the electric power **850** at the power generation voltage level to the power distribution trailer **820** via one or more medium voltage cables.

[0168] The power distribution trailer **820** may distribute the electric power **850** at the power generation voltage level to a plurality of single medium-voltage VFDs **840**(*a-n*), where n is an integer equal to or greater than two, with each single medium-voltage VFD **840**(*a-n*) positioned on a corresponding single trailer **830**(*a-n*) from a plurality of single trailers, where n is an integer equal to or greater than two. The power distribution trailer **820** may include a switchgear configuration **805** that includes a plurality of switchgears **825**(*a-n*), where n is an integer equal to or greater than two, to distribute the electric power **850** generated by the at least one power source included in the power distribution trailer **810** at the power generation voltage level **860** to each corresponding single medium-voltage VFD **840**(*a-n*) positioned on each corresponding trailer **830**(*a-n*).

[0169] Since the electric power **850** is consolidated to the power generation system **810**, the switch gear configuration **805** may distribute the electric power **850** at the power generation voltage level to each of the single medium-voltage VFDs **840**(*a-n*) as electric power **860** at the power generation voltage level such that each of the single medium-voltage VFDs **840**(*a-n*) may then drive the single shaft electric motors and the single hydraulic pumps as discussed in detail below. For example, when the power distribution system **810** has power sources that include gas turbine engines, the switch gear configuration **805** of the power distribution trailer **820** may distribute the electric power **850** at the power generation voltage level of 13.8 kV to each of the single medium-voltage VFDs **840**(*a-n*) as electric power **860** at the power generation voltage level of 13.8 kV. In another example, when the power distribution **810** has power sources that include an electric power plant, the switch gear configuration **805** of the power distribution trailer **820** may distribute the electric power **850** at the power generation level of 12.47 kV to each of the single medium-voltage VFDs **840**(*a-n*) as electric power **860** at the power generation level of 12.47 kV.

[0170] In order for the electric power to be consolidated to the power generation system **810** as well as to provide an electric driven system in which each of the components of the electric driven hydraulic fracking system **800** is driven by the electric power generated by the power generation system **810**, the power distribution trailer **820** provides the flexibility to distribute the electric power **850** generated by the power generation system **810** at different voltage levels. In adjusting the voltage levels that the electric power **850** generated by the power generation system **810** is distributed, the power distribution trailer **820** may then distribute the appropriate voltage levels to several different components included in the electric driven hydraulic fracking system **800** to accommodate the electric power requirements of the several different components included in the electric driven hydraulic fracking system **800**. For example, the power distribution trailer **820** may distribute the electric power **860** generated by the power generation system **810** at the voltage level of 13.8 kV as generated by the power generation system **810** via the switch gears **825**(*a-n*) to each of the single medium-voltage VFDs **840**(*a-n*) for the each of the single medium-voltage VFDs **840**(*a-n*) to drive the single shaft electric motors and the single hydraulic pumps. In another example, the power distribution trailer **820** may distribute the electric power **860** generated by the power generation system **810** at the voltage level of 12.47 kV as generated by the power generation system **810** via the switch gears **825**(*a-n*) to each of the single medium-voltage VFDs **840**(*a-n*) for each of the single medium-voltage VFDs **840**(*a-n*) to drive the single shaft electric motors and the single hydraulic pumps.

[0171] However, the electric power distribution trailer **820** may also distribute the electric power **850** generated by the power generation system **810** at a decreased voltage level from the voltage level of the electric power **850** originally generated by the power generation system **810** (i.e., the initial or power generation voltage level). Several different components of the electric driven hydraulic fracking system **800** may have power requirements that require electric power at a significantly lower voltage level than the electric power **850** originally generated by the power generation system **810**. The power distribution trailer **820** may include a switchgear transformer configuration **835** that may step down the voltage level of the electric power **850** as originally generated by the power distribution trailer **810** to a lower voltage level that satisfies the power requirements of those components that may not be able to handle the increased voltage level of the electric power **850** originally generated by the power distribution trailer **810**. In doing so, the electric power distribution trailer **820** may provide the necessary flexibility to continue to consolidate the electric power **850** to the power generation system **810** while still enabling each of the several components to be powered by the electric power generated by the power generation system **810**.

[0172] For example, the switchgear transformer configuration **835** may convert the electric power **850** generated by the at least one power source of the power generation system **810** at the power generation voltage level to at an auxiliary voltage level that is less than the power generation voltage level. The switchgear transformer configuration **835** may

then distribute the electric power **855** at the auxiliary voltage level to each single medium-voltage VFD **840**(*a-n*) on each corresponding single trailer **830**(*a-n*) to enable each single medium-voltage VFD **840**(*a-n*) from the plurality of single medium-voltage VFDs **840**(*a-n*) to communicate with the fracking control center **880**. The switchgear transformer configuration **835** may also distribute the electric power **855** at the auxiliary voltage level to a plurality of auxiliary systems **890**. The plurality of auxiliary systems **890** assists each single hydraulic pump as each hydraulic pump from the plurality of single hydraulic pumps operate to prepare the well for the later extraction of the fluid from the well.

[0173] In such an example, the switchgear transformer configuration **835** may convert the electric power **850** generated by the power generation system **810** with power sources include gas turbine engines at the power generation voltage level of 13.8 kV to an auxiliary voltage level of 480V, which is less than the power generation voltage level of 13.8 kV. The switchgear transformer configuration **835** may then distribute the electric power **855** at the auxiliary voltage level of 480V to each single medium-voltage VFD **840**(*a-n*) on each corresponding single trailer **830**(*a-n*) to enable each single medium-voltage VFD **840**(*a-n*) from the plurality of single medium-voltage VFDs **840**(*a-n*) to communicate with the fracking control center **880**. The switchgear transformer configuration **835** may also distribute the electric power **855** at the auxiliary voltage level of 480V to a plurality of auxiliary systems **890**.

[0174] In another example, the switchgear transformer configuration **835** may convert the electric power **850** generated by the power generation system **810** with power sources that include an electric power plant at the power generation voltage level of 12.47 kV to an auxiliary voltage level of 480V, which is less than the power generation voltage level of 12.47 kV. In another example, the switchgear transformer configuration **835** may convert the electric power **850** at the power generation voltage level generated by the power generation system **810** to the auxiliary voltage level of 480V, 120V, 24V and/or any other auxiliary voltage level that is less than the power generation voltage level. The switchgear transformer configuration **835** may convert the electric power **850** at the power generation voltage level generated by the power generation system **810** to any auxiliary voltage level that is less than the power generation voltage level to assist each single medium-voltage VFD **840**(*a-n*) in executing operations that do not require the electric power **860** at the power generation voltage level that will be apparent to those skilled in the relevant art(s) without departing from the spirit and scope of the disclosure.

[0175] Certain embodiments of the present application relate to a variable frequency drive (VFD) cabin, comprising: a cabin housing, the cabin housing comprising: a cabin floor; and a cabin cap secured to the cabin floor, thereby at least partially enclosing a cabin interior of the cabin housing; a medium-voltage VFD positioned within the interior of the cabin housing, the medium-voltage VFD comprising: a transformer assembly comprising: a transformer assembly frame; a transformer mounted to the transformer assembly frame; and a first vibration damping assembly mounted between the transformer assembly frame and the cabin floor; and a power cell assembly comprising: a power cell assembly frame; a plurality of power cells mounted to the power cell assembly frame; and a second vibration damping assembly mounted between the power cell assembly frame and the cabin floor.

[0176] In certain embodiments, the power cell assembly further comprises a plurality of slide rails connected with the power cell assembly frame, and wherein each of the power cells is mounted to the power cell assembly frame via a corresponding one of the slide rails.

[0177] In certain embodiments, the VFD cabin further comprises a ventilation system, the ventilation system comprising: a filter positioned at an intake port of the cabin housing; at least one intake blower configured to draw air into the cabin interior via the filter; and at least one exhaust blower configured to expel air from the cabin interior via an exhaust port of the cabin housing.

[0178] In certain embodiments, the ventilation system is configured to generate an airstream that flows from the intake port to the exhaust port; wherein the power cell assembly is positioned within the airstream upstream of the transformer assembly; and wherein the transformer assembly is positioned within the airstream downstream of the power cell assembly.

[0179] In certain embodiments, the at least one intake blower is configured to draw air into the cabin interior at a first flow rate; wherein the at least one exhaust blower is configured to expel air from the cabin interior at a second flow rate; and wherein the first flow rate is greater than the second flow rate such that the ventilation system is configured to generate an overpressure condition within the cabin interior.

[0180] In certain embodiments, the overpressure condition is one in which an interior pressure within the cabin exceeds an exterior pressure outside the cabin.

[0181] In certain embodiments, the VFD cabin further comprises at least one low-voltage VFD connected with the at least one intake blower and the at least one exhaust blower, wherein the at least one low-voltage VFD is configured to control operation of the at least one intake blower and the at least one exhaust blower.

[0182] In certain embodiments, the at least one low-voltage VFD comprises a plurality of low-voltage VFDs, and wherein each low-voltage VFD is dedicated to a corresponding one of the at least one intake blower or to a corresponding one of the at least one exhaust blower.

[0183] In certain embodiments, the ventilation system further comprises a plurality of cooling fans; and wherein each cooling fan is dedicated to a corresponding power cell of the plurality of power cells and is configured to blow air across the corresponding power cell.

[0184] In certain embodiments, the VFD cabin further comprises a plurality of temperature sensors; wherein each temperature sensor is configured to sense a temperature of a corresponding power cell of the plurality of power cells; and wherein the ventilation system is configured to control operation of the plurality of cooling fans based upon information generated by the plurality of temperature sensors.

[0185] In certain embodiments, the first vibration damping assembly has a first overall stiffness; and wherein the second vibration damping assembly has a second overall stiffness less than the first overall stiffness.

[0186] In certain embodiments, each of the first vibration damping assembly and the second vibration damping assembly comprises a plurality of vibration damping couplers; and

wherein each vibration damping coupler comprises a vibration damper and a bolt extending through the vibration damper.

[0187] In certain embodiments, each vibration damper comprises at least one of an elastic

[0188] In certain embodiments, the cabin cap is releasably secured to the cabin floor such that the cabin cap is operable to be removed from the cabin floor as a unit.

[0189] Certain embodiments relate to a pump configuration comprising the VFD cabin, the pump configuration further comprising: a mobile trailer, wherein the VFD cabin is mounted to the mobile trailer; an electric motor mounted to the mobile trailer, wherein the electric motor is connected with the medium-voltage VFD such that the medium-voltage VFD is operable to control operation of the electric motor; and a hydraulic pump mounted to the mobile trailer, wherein the hydraulic pump is connected with the electric motor such that the hydraulic pump is operable to pump a fracking media when operated by the electric motor.

[0190] In certain embodiments, wherein the VFD cabin is mounted to the mobile trailer without a suspension being connected between the VFD cabin and the mobile trailer.

[0191] Certain embodiments of the present application relate to a variable frequency drive (VFD) cabin, comprising: a cabin housing, the cabin housing comprising an air intake port and an air exhaust port; a transformer mounted in an interior of the cabin housing, wherein the transformer is configured to transform electric power at an initial voltage to electric power at a transformer voltage, wherein the initial voltage is within a medium-voltage voltage range, and wherein the transformer voltage is within a low-voltage voltage range; a power cell assembly mounted in the interior of the cabin housing and connected with the transformer, wherein the power cell assembly comprises a plurality of power cells and is configured to convert electric power at the transformer voltage to electric power at a VFD voltage, wherein the VFD voltage is within a third medium-voltage voltage range; and a ventilation system, comprising: a filtration unit positioned at the air intake port; at least one intake blower configured to draw air into the cabin housing via the air intake port and the filtration unit at an intake flowrate; at least one exhaust blower configured to expel air from the cabin housing via the exhaust port at an exhaust flowrate; and a ventilation control system configured to control operation of the at least one intake blower and the at least one exhaust blower such that the intake flowrate exceeds the exhaust flowrate to thereby create an overpressure condition within the cabin housing.

[0192] In certain embodiments, the ventilation control system comprises at least one low-voltage VFD configured to control the at least one intake blower and the at least one exhaust blower such that the

[0193] In certain embodiments, the ventilation control system comprises a plurality of low-voltage VFDs, the plurality of low-voltage VFDs comprising: at least one first low-voltage VFD, wherein each first low-voltage VFD is dedicated to a corresponding one of the at least one intake blower; and at least one second low-voltage VFD, wherein each second low-voltage VFD is dedicated to a corresponding one of the at least one exhaust blower.

[0194] In certain embodiments, the ventilation system is configured to generate an airflow stream traveling from the intake port to the exhaust port; wherein the power cell assembly is positioned in the airflow stream upstream of the transformer; and wherein the transformer is positioned in the airflow stream downstream of the power cell assembly.

[0195] In certain embodiments, the ventilation system further comprises a plurality of cooling fans, wherein each cooling fan is configured to blow air across a corresponding one of the power cells.

[0196] In certain embodiments, the VFD cabin further comprises a plurality of temperature sensors, wherein each temperature sensor is configured to sense a temperature of a corresponding one of the power cells; and wherein each cooling fan is configured to vary a flow rate across the corresponding one of the power cells based upon the temperature of the corresponding one of the power cells as sensed by a corresponding one of the temperature sensors.

[0197] In certain embodiments, the cabin housing further comprises a closet that is accessible from an exterior of the cabin and is isolated from the interior of the cabin, wherein at least a portion of the ventilation control system is mounted within the closet.

[0198] In certain embodiments, the cabin housing lacks an entry door by which the interior of the cabin can be accessed.

[0199] In certain embodiments, the transformer is mounted to a floor of the cabin via a plurality of vibration damping couplers.

[0200] In certain embodiments, the power cell assembly is mounted to a floor of the cabin via a plurality of vibration damping couplers.

[0201] Certain embodiments of the present application relate to a method of manufacturing a cabin comprising a variable frequency drive (VFD) including a transformer and a plurality of power cells, the method comprising: mounting a transformer assembly to a cabin floor, wherein the transformer assembly comprises the transformer, a transformer frame to which the transformer is mounted, and a first vibration damping assembly, wherein mounting the transformer assembly to the cabin floor comprises securing the transformer frame to the cabin floor via the first vibration damping assembly; mounting a power cell assembly to the cabin floor, wherein the power cell assembly comprises the plurality of power cells, a power cell frame to which the plurality of power cells are mounted, and a second vibration damping assembly, wherein mounting the power cell assembly to the cabin floor comprises securing the power cell frame to the cabin floor via the second vibration damping assembly.

[0202] In certain embodiments, the method further comprises enclosing the cabin, thereby forming a cabin housing within which the transformer assembly and the power cell assembly are positioned.

[0203] In certain embodiments, enclosing the cabin comprises: lowering a preformed cabin cap onto the cabin floor; and securing the preformed cabin cap to the cabin floor such that the cabin housing is defined at least in part by the preformed cabin cap and the cabin floor.

[0204] In certain embodiments, the cabin cap comprises a plurality of sidewalls and a roof connected with the plurality of sidewalls.

[0205] In certain embodiments, the method further comprises: operating an input blower to draw air into the cabin housing through a filter via an input port formed in the cabin housing at a first flow rate; and operating an exhaust blower to expel air from the cabin housing via an exhaust port formed in the cabin housing at a second flow rate; wherein

the first flow rate is greater than the second flow rate such that an overpressure condition is provided within the cabin housing.

[0206] In certain embodiments, the method further comprises securing the cabin floor to a mobile trailer.

[0207] In certain embodiments, securing the cabin floor to the mobile trailer comprises bolting and/or welding the cabin floor to the mobile trailer.

[0208] Certain embodiments of the present application relate to a method, comprising: receiving, by at least one pump configuration, electric power at an initial voltage level, wherein the initial voltage level is in a first medium-voltage voltage range, wherein each pump configuration comprises: a corresponding and respective mobile trailer; a corresponding and respective medium-voltage variable frequency drive (VFD) mounted to the mobile trailer; a corresponding and respective single, single-shaft electric motor mounted to the mobile trailer and operably connected with the medium-voltage VFD; and a corresponding and respective single hydraulic pump mounted to the mobile trailer and operably connected with the single shaft of the single, single-shaft electric motor; converting, by the medium-voltage VFD of each pump configuration, the electric power at the initial voltage level to electric power at a VFD voltage level, wherein the VFD voltage level is in a second medium-voltage voltage range; converting, by the single, single-shaft electric motor of each pump configuration, the electric power at the VFD voltage level to motive power by rotating the single shaft of the single, single-shaft electric motor at a revolutions per minute (RPM) speed; and transmitting rotation of the single shaft of the single, single-shaft electric motor of each pump configuration to the hydraulic pump of the pump configuration, thereby causing the single hydraulic pump of each pump configuration to continuously pump a fracking media at a horsepower (HP) level.

[0209] In certain embodiments, the VFD voltage is less than the initial voltage.

[0210] In certain embodiments, the first medium-voltage voltage range is about 11.8 kV to about 14.5 kV.

[0211] In certain embodiments, the second medium-voltage voltage range is about 4160V or greater.

[0212] In certain embodiments, the RPM speed is about 750 RPM or greater.

[0213] In certain embodiments, the HP level is about 5000 HP or greater.

[0214] In certain embodiments, the at least one pump configuration comprises a plurality of the pump configurations; and the method further comprises: supplying the fracking media pumped by the hydraulic pumps of the plurality of pump configurations to fracking equipment; and operating the fracking equipment to charge the fracking media into a fracking well.

[0215] In certain embodiments, the method further comprises: receiving, at a mobile power distribution system, electric power at an initial megawatt (MW) level and the initial voltage level; and distributing, by the mobile power distribution system, electric power at the initial voltage level to the plurality of pump configurations.

[0216] In certain embodiments, the mobile power distribution system is mounted to a single power distribution trailer.

[0217] In certain embodiments, the electric power at the initial MW level and the initial voltage level is received from a power grid.

[0218] In certain embodiments, each pump configuration further comprises a corresponding and respective ventilation system, and the method further comprises: converting, by the mobile power distribution system, a portion of the electric power at the initial voltage level to electric power at a low-voltage voltage level; distributing, by the mobile power distribution system, the electric power at the low-voltage level to the plurality of pump configurations; and operating each ventilation system using the electric power at the low-voltage voltage to cool the medium-voltage VFD of the corresponding pump configuration.

[0219] In certain embodiments, the method further comprises: supplying, by the mobile power distribution system, electric power to at least one auxiliary system; and operating the at least one auxiliary system using the power supplied by the mobile power distribution system.

[0220] In certain embodiments, the method further comprises: generating, by a mobile power generation system, the electric power at the initial MW level and the initial voltage level; and supplying the electric power at the initial MW level and the initial voltage level to the power

[0221] In certain embodiments, the mobile power generation system is mounted to a single power generation trailer.

[0222] In certain embodiments, the generating comprises: operating a first gas turbine engine of the mobile power generation system to provide a first portion of the electric power to be supplied to the mobile power distribution system; and operating a second gas turbine engine of the mobile power generation system to provide a second portion of the electric power to be supplied to the mobile power distribution system.

[0223] In certain embodiments, the method further comprises providing a fault redundancy, wherein providing the fault redundancy comprises: continuing to provide, by the first gas turbine engine, the first portion of the electric power when the second gas turbine engine suffers a fault condition; and continuing to provide, by the second gas turbine engine, the second portion of the electric power when the first gas turbine engine suffers the fault condition.

[0224] Certain embodiments of the present application relate to a pump configuration for a fracking operation, the pump configuration comprising: a mobile trailer; a medium-voltage variable frequency drive (VFD) mounted to the trailer, wherein the medium-voltage VFD is configured to convert electric power at an initial voltage level to electric power at a VFD, wherein the initial voltage level is about 2.8 kilovolts (kV) or greater; a single, single-shaft electric motor mounted to the mobile trailer and connected with the medium-voltage VFD, wherein the single, single-shaft electric motor is configured to operate in response to receiving the electric power at the VFD voltage; and a single hydraulic pump mounted to the mobile trailer and connected with the single, single-shaft electric motor, wherein the single hydraulic pump is configured to continuously pump fracking media at a horsepower (HP) level of about 5000 HP or greater in response to operation of the single, single-shaft electric motor.

[0225] In certain embodiments, the single, single-shaft electric motor is configured to operate at a revolutions per minute (RPM) level of about 750 RPM or greater in response to receiving the electric power at the VFD voltage.

[0226] In certain embodiments, the single hydraulic pump is configured to operate on a continuous duty cycle to continuously pump the fracking media at the HP level of about 5000 HP or greater.

[0227] In certain embodiments, the VFD voltage is about 4.16 kV or greater.

[0228] In certain embodiments, the initial voltage is in a range of about 10 kV to about 16 kV.

[0229] In certain embodiments, the pump configuration lacks a second hydraulic pump configured to continuously pump fracking media into the fracking well at the HP level of about 5000 HP or greater.

[0230] In certain embodiments, the pump configuration lacks a second single-shaft electric motor configured to operate at the VFD voltage.

[0231] In certain embodiments, the pump configuration further comprises a ventilation system comprising: at least one blower configured to blow air across the medium-voltage VFD in response to receiving low-voltage electric power; and at least one low-voltage VFD configured to supply the low-

[0232] In certain embodiments, the pump configuration further comprises a VFD cabin in which the medium-voltage VFD is positioned; and wherein the cabin further comprises a junction box comprising: a single medium-voltage connector configured for connection with a medium-voltage electric line, wherein the single medium-voltage connector is operable to supply electric power from the medium-voltage electric line to the medium-voltage VFD; and a single low-voltage connector configured for connection with a low-voltage electric line, wherein the single low-voltage connector is operable to supply electric power from the low-voltage electric line to the low-voltage VFD.

[0233] In certain embodiments, the junction box further comprises a communication line connector configured for connection with a communication line; and wherein the medium-voltage VFD is configured to operate based upon information received via the communication line.

[0234] Certain embodiments of the present application relate to a system comprising a plurality of the pump configuration, the system further comprising a mobile power distribution system connected with the plurality of pump configurations; wherein the mobile power distribution system is configured to receive electric power at a power level of about 24 megawatts (MW) or greater, and to distribute the electric power to the plurality of pump configurations at the initial voltage level.

[0235] In certain embodiments, the mobile power distribution system is configured for connection with a power grid operable to supply electric power to the mobile power distribution system.

[0236] In certain embodiments, the mobile power distribution system is mounted to a single mobile power distribution trailer.

[0237] In certain embodiments, the mobile power distribution system is further configured to convert a portion of the electric power to a low-voltage voltage level, and to distribute electric power at the low-voltage level to each of the pump configurations; and wherein each of the pump configurations comprises a ventilation system configured to operate using the electric power at the low-voltage voltage level.

[0238] In certain embodiments, the system further comprises a mobile power generation system connected with the mobile power distribution system; wherein the power generation system is configured to generate the electric power at the power level of about 24 MW or greater and at the initial voltage level.

[0239] In certain embodiments, the power generation system comprises: a first gas turbine engine configured to generate a first electric power between about 12 MW and about 16 MW; and a second gas turbine engine configured to generate a second electric power between about 12 MW and about 16 MW; wherein the electric power level of about 24 MW or greater at the initial voltage level comprises the first electric power and the second electric power.

[0240] In certain embodiments, the mobile power generation system further comprises a mobile power generation trailer; and wherein the first gas turbine engine and the second gas turbine engine are mounted to the second mobile trailer.

[0241] It is to be appreciated that the Detailed Description section, and not the Abstract section, is intended to be used to interpret the claims. The Abstract section may set forth one or more, but not all exemplary embodiments, of the present disclosure, and thus, is not intended to limit the present disclosure and the appended claims in any way.

[0242] The present disclosure has been described above with the aid of functional building blocks illustrating the implementation of specified functions and relationships thereof. The boundaries of these functional building blocks have been arbitrarily defined herein for the convenience of the description. Alternate boundaries may be defined so long as the specified functions and relationships thereof are appropriately performed.

[0243] It will be apparent to those skilled in the relevant art(s) the various changes in form and detail can be made without departing from the spirt and scope of the present disclosure. Thus the present disclosure should not be limited by any of the above-described exemplary embodiments, but should be defined only in accordance with the following claims and their equivalents.

What is claimed is:

1. A pump trailer for hydraulic fracturing, comprising:

a junction panel configured to receive electric power at a first voltage level and electric power at a second voltage level from a power distribution system;

a first variable frequency drive (VFD) configured to receive the electric power at the first voltage level from the junction panel, and drive an electric motor, wherein the electric motor is mechanically coupled to a hydraulic pump; and

a second VFD configured to receive the electric power at the second voltage level from the junction panel, and drive one or more auxiliary systems,

wherein the first voltage level is higher than the second voltage level.

2. The pump trailer of claim **1**, wherein the junction panel, the first VFD, and the second VFD are disposed inside a cabin of the pump trailer.

3. The pump trailer of claim **1**, wherein the electric motor and the pump are disposed on the pump trailer and outside of the cabin.

4. The pump trailer of claim **1**, wherein the first voltage level is 5 kV to 72 kV.

5. The pump trailer of claim **1**, wherein the second voltage level is less than 1 kV.

6. The pump trailer of claim **1**, wherein the first VFD is configured to convert the electric power at the first voltage level to electric power at a third voltage level, and control the electric motor using the electric power at the third voltage level.

7. The pump trailer of claim **6**, wherein the third voltage level is higher than the second voltage level and lower than the first voltage level.

8. The pump trailer of claim **7**, wherein the third voltage level is 2 kV to 8 kV.

9. The pump trailer of claim **1**, wherein the one or more auxiliary systems comprise a filtration unit.

10. The pump trailer of claim **1**, wherein the one or more auxiliary systems comprise an intake blower and an exhaust blower.

11. The pump trailer of claim **1**, wherein the one or more auxiliary systems comprise cooling fans configured to cool the first VFD.

12. A method of hydraulic fracturing, comprising:

generating, by a power generation system, electric power;

receiving the electric power generated by the power generation system at a power distribution system;

distributing, by the power distribution system, electric power at a first voltage level to first variable frequency drives (VFDs) respectively disposed on pump trailers;

respectively driving, by each first VFD, a motor, wherein each motor is disposed on one of the pump trailers;

respectively driving, by each motor, a hydraulic pump to pump hydraulic fluid to fracking equipment, wherein each hydraulic pump is disposed on one of the pump trailers; and

performing hydraulic fracturing, by the fracking equipment, using the hydraulic fluid.

13. The method of claim **12**, wherein the generating of the electric power comprises generating the electric power using a gas turbine engine.

14. The method of claim **13**, wherein the gas turbine engine generates the electric power at a voltage between 5 kV and 72 kV.

15. The method of claim **12**, further comprising distributing, by the power distribution system, electric power to one or more auxiliary systems.

16. The method of claim **15**, wherein the one or more auxiliary systems comprise a hydration system, a chemical additive system, a blending system, a mixing system, or combinations thereof.

17. The method of claim **12**, wherein each first VFD is disposed inside a cabin of one of the pump trailers.

18. The method of claim **12**, further comprising distributing, by the power distribution system, electric power at a second voltage level to second VFDs respectively disposed on the pump trailers.

19. The method of claim **18**, wherein the first voltage level is higher than the second voltage level.

20. The method of claim **18**, further comprising driving, by each second VFD, an auxiliary system, wherein each auxiliary system is disposed on one of the pump trailers.

21. The method of claim **20**, wherein the auxiliary system comprises an intake blower, an exhaust blower, a cooling fan, or combinations thereof.

22. The method of claim **12**, wherein the fracking equipment is disposed on a fracking trailer.

23. The method of claim **12**, further comprising extracting hydrocarbons from a well after the hydraulic fracturing.

24. The method of claim **12**, wherein the first voltage level is between 1 kV and 72 kV.

25. The method of claim **19**, wherein the second voltage level is less than 1 kV.

* * * * *