US 20250261207A1

(19) United States
(12) Patent Application Publication
Qiao et al.
(10) Pub. No.: US 2025/0261207 A1
(43) Pub. Date: Aug. 14, 2025

(54) **LOSSLESS PATH SWITCHING**

(71) Applicant: **Ofinno, LLC**, Reston, VA (US)

(72) Inventors: **Weihua Qiao**, Herndon, VA (US); **Taehun Kim**, Fairfax, VA (US); **Esmael Hejazi Dinan**, McLean, VA (US); **Kyungmin Park**, Vienna, VA (US); **Jian Xu**, McLean, VA (US); **Peyman Talebi Fard**, Vienna, VA (US); **Stanislav Filin**, Chantilly, VA (US); **Jongwoo Hong**, Vienna, VA (US); **SungDuck Chun**, Fairfax, VA (US)

(73) Assignee: **Ofinno, LLC**, Reston, VA (US)

(21) Appl. No.: **19/192,786**

(22) Filed: **Apr. 29, 2025**

Related U.S. Application Data

(63) Continuation of application No. PCT/US2023/036615, filed on Nov. 1, 2023.

(60) Provisional application No. 63/421,286, filed on Nov. 1, 2022.

Publication Classification

(51) **Int. Cl.**
H04W 72/23 (2023.01)
H04W 88/04 (2009.01)

(52) **U.S. Cl.**
CPC ***H04W 72/23*** (2023.01); *H04W 88/04* (2013.01)

(57) **ABSTRACT**

A first wireless device receives, from a base station, a first message indicating to relay one or more downlink data packets associated with a second wireless device, and transmits, to the base station, one or more first acknowledgements of the one or more downlink data packets.

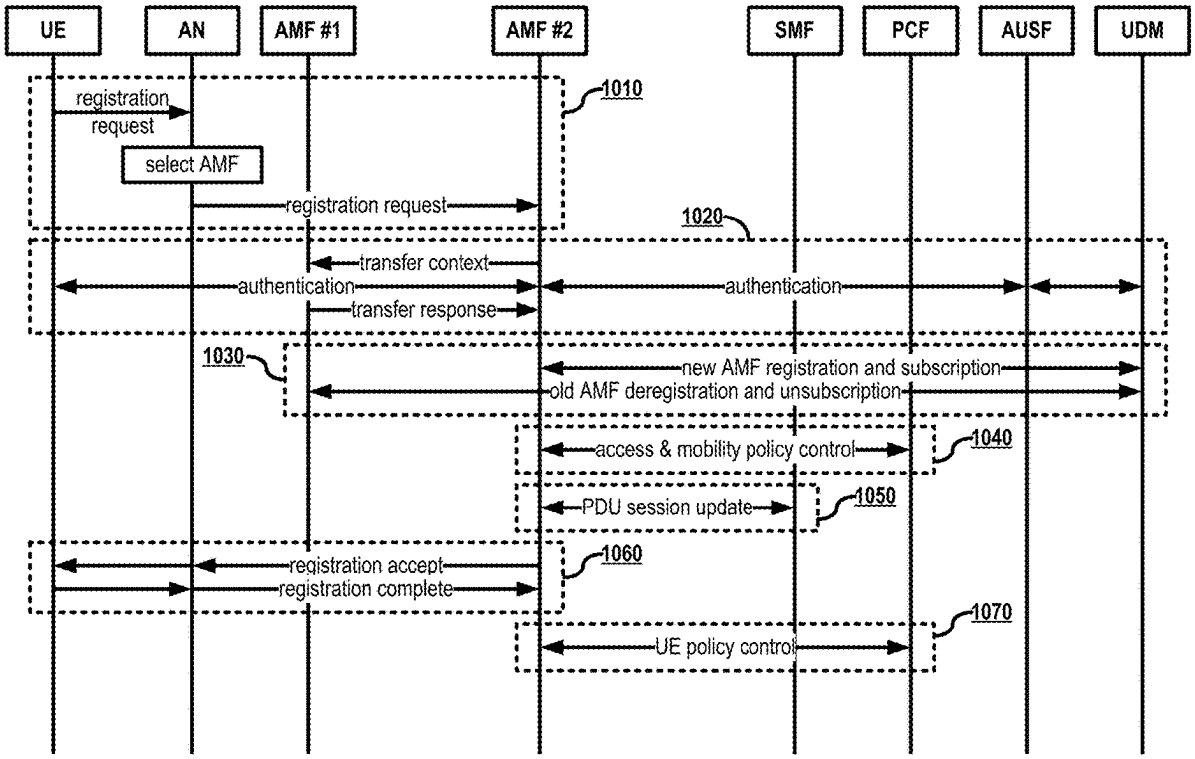

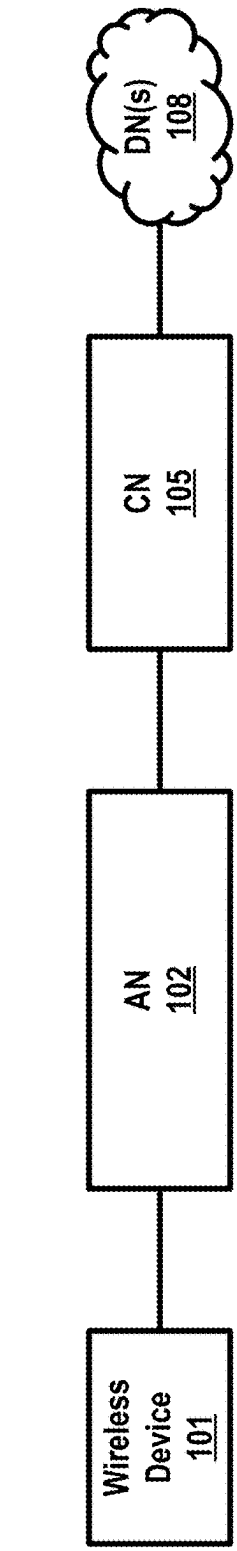
100
Wireless Device 101
AN 102
CN 105
DN(s) 108

FIG. 1A

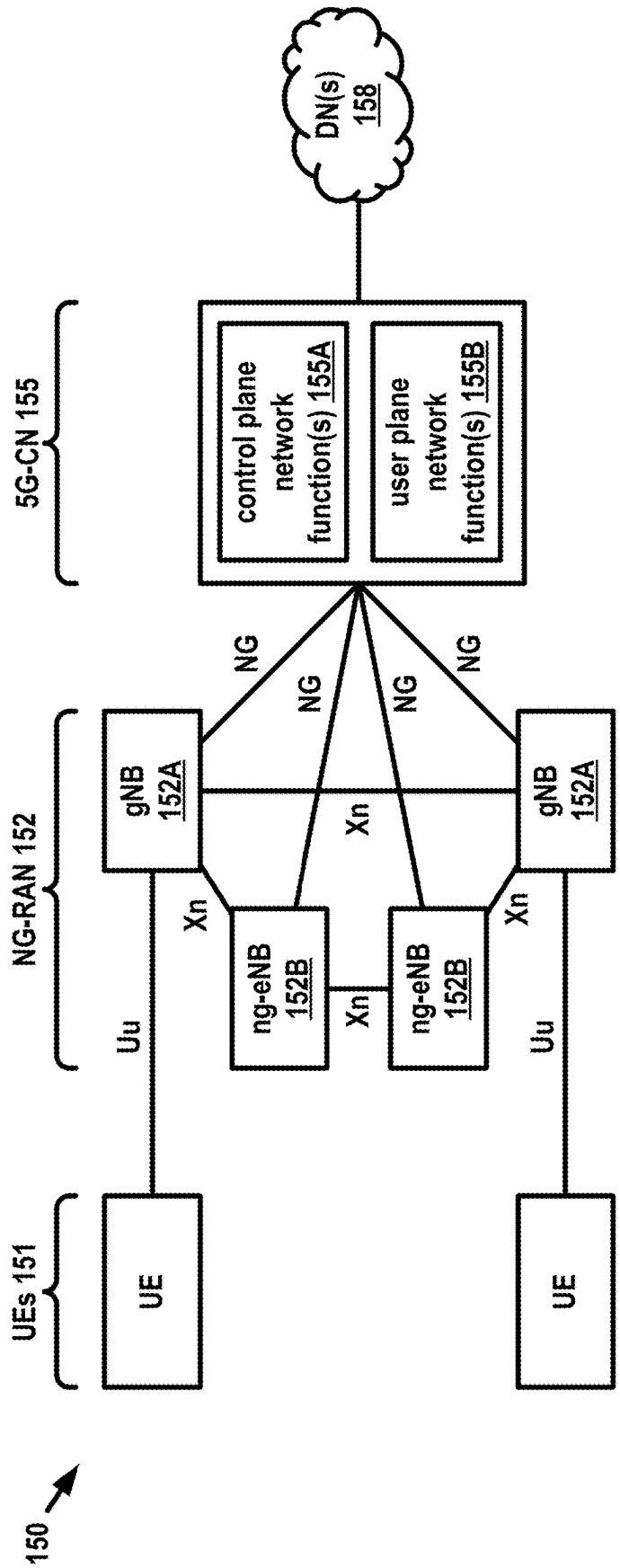
150
UEs 151
UE
UE
Uu
Uu
NG-RAN 152
gNB 152A
gNB 152A
ng-eNB 152B
ng-eNB 152B
Xn
Xn
Xn
Xn
NG
NG
NG
NG
5G-CN 155
control plane network function(s) 155A
user plane network function(s) 155B
DN(s) 158

FIG. 1B

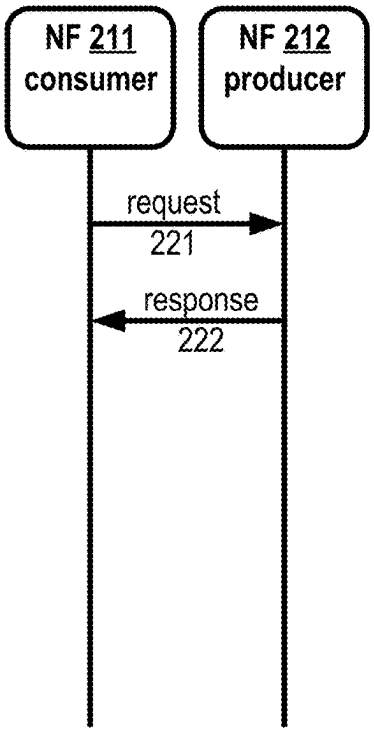

FIG. 2A

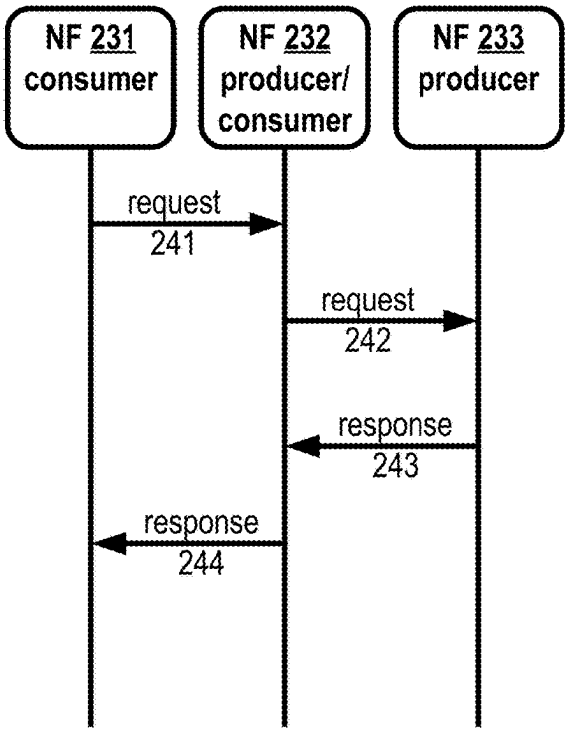

FIG. 2B

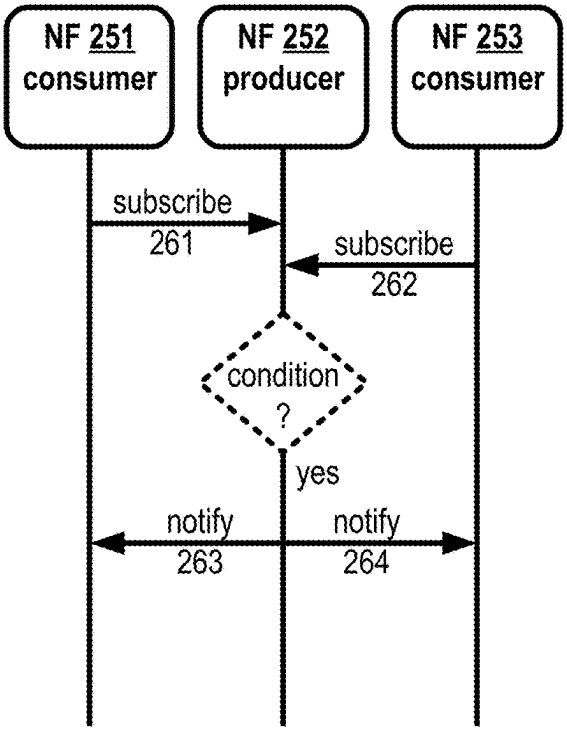

FIG. 2C

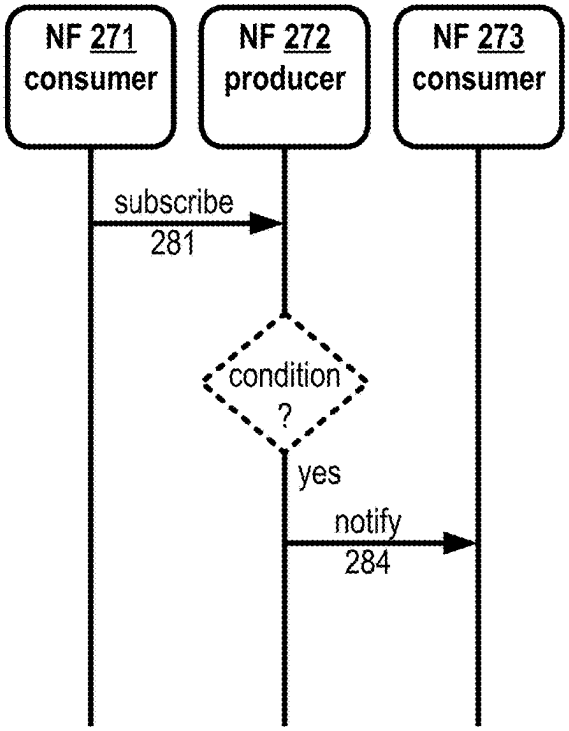

FIG. 2D

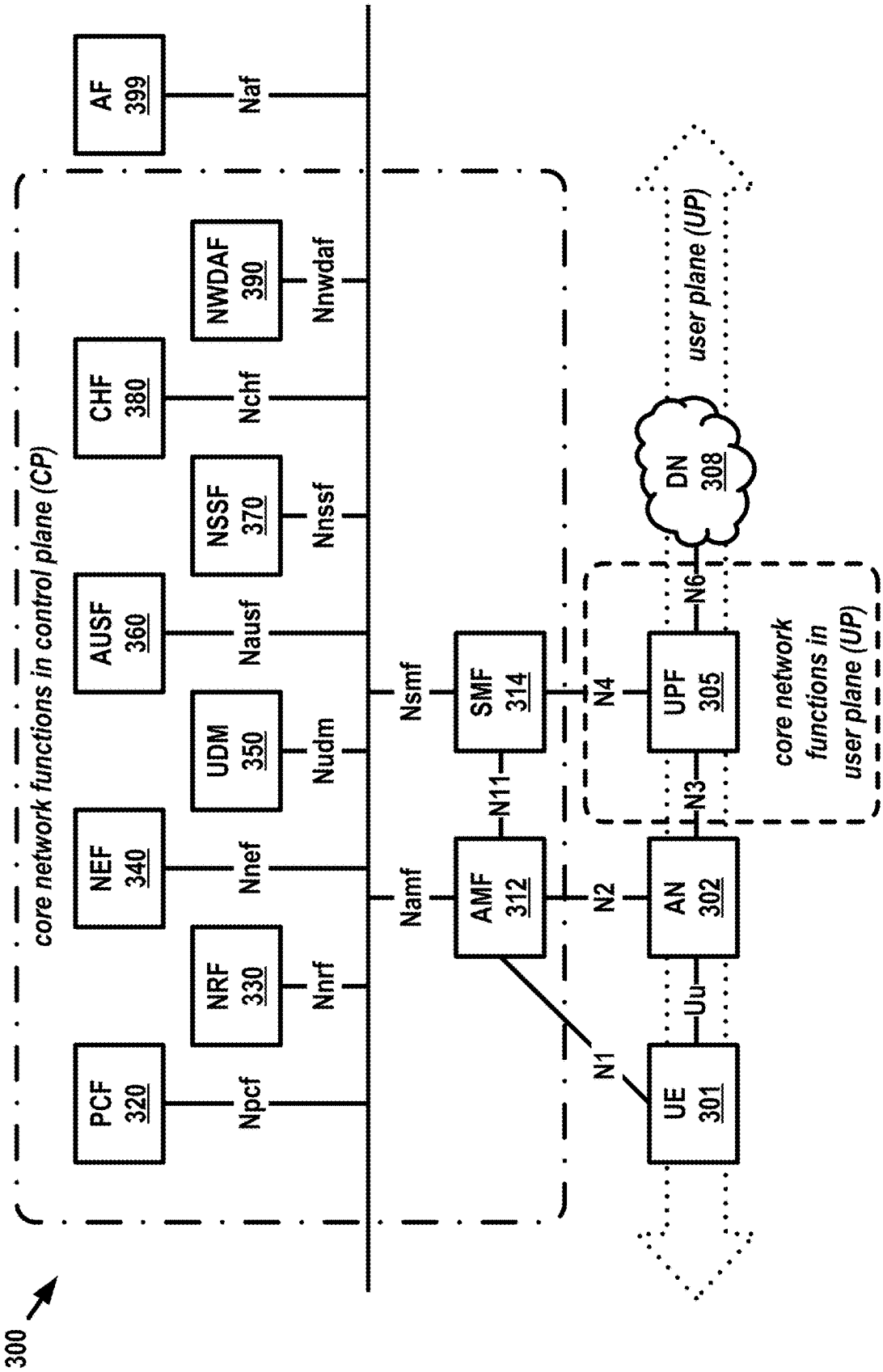
300
core network functions in control plane (CP)
AF 399
Naf
NWDAF 390
Nnwdaf
CHF 380
Nchf
NSSF 370
Nnssf
AUSF 360
Nausf
UDM 350
Nudm
NEF 340
Nnef
NRF 330
Nnrf
PCF 320
Npcf
Nsmf
Namf
SMF 314
AMF 312
N11
N1
N4
N2
UPF 305
AN 302
N3
Uu
UE 301
N6
DN 308
user plane (UP)
core network functions in user plane (UP)

FIG. 3

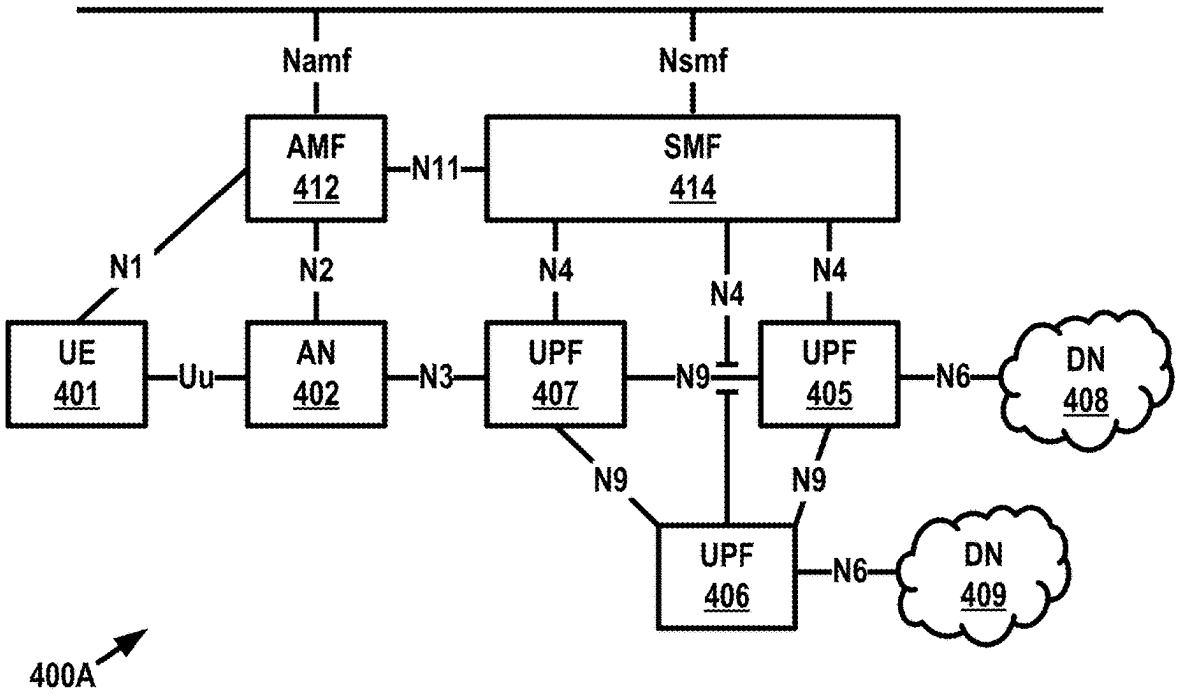
Namf
Nsmf
AMF
412
N11
SMF
414
N1
N2
N4
N4
N4
UE
401
Uu
AN
402
N3
UPF
407
N9
UPF
405
N6
DN
408
N9
N9
UPF
406
N6
DN
409
400A

FIG. 4A

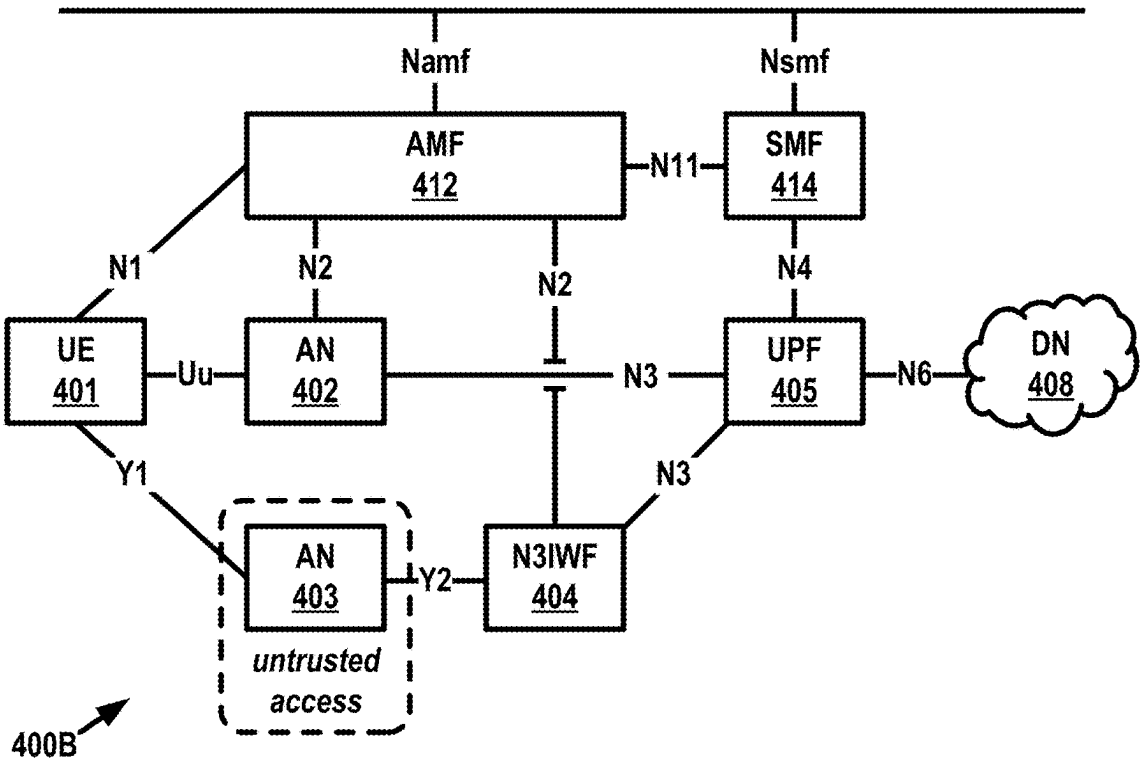
Namf
Nsmf
AMF
412
N11
SMF
414
N1
N2
N2
N4
UE
401
Uu
AN
402
N3
UPF
405
N6
DN
408
Y1
N3
AN
403
Y2
N3IWF
404
untrusted
access
400B

FIG. 4B

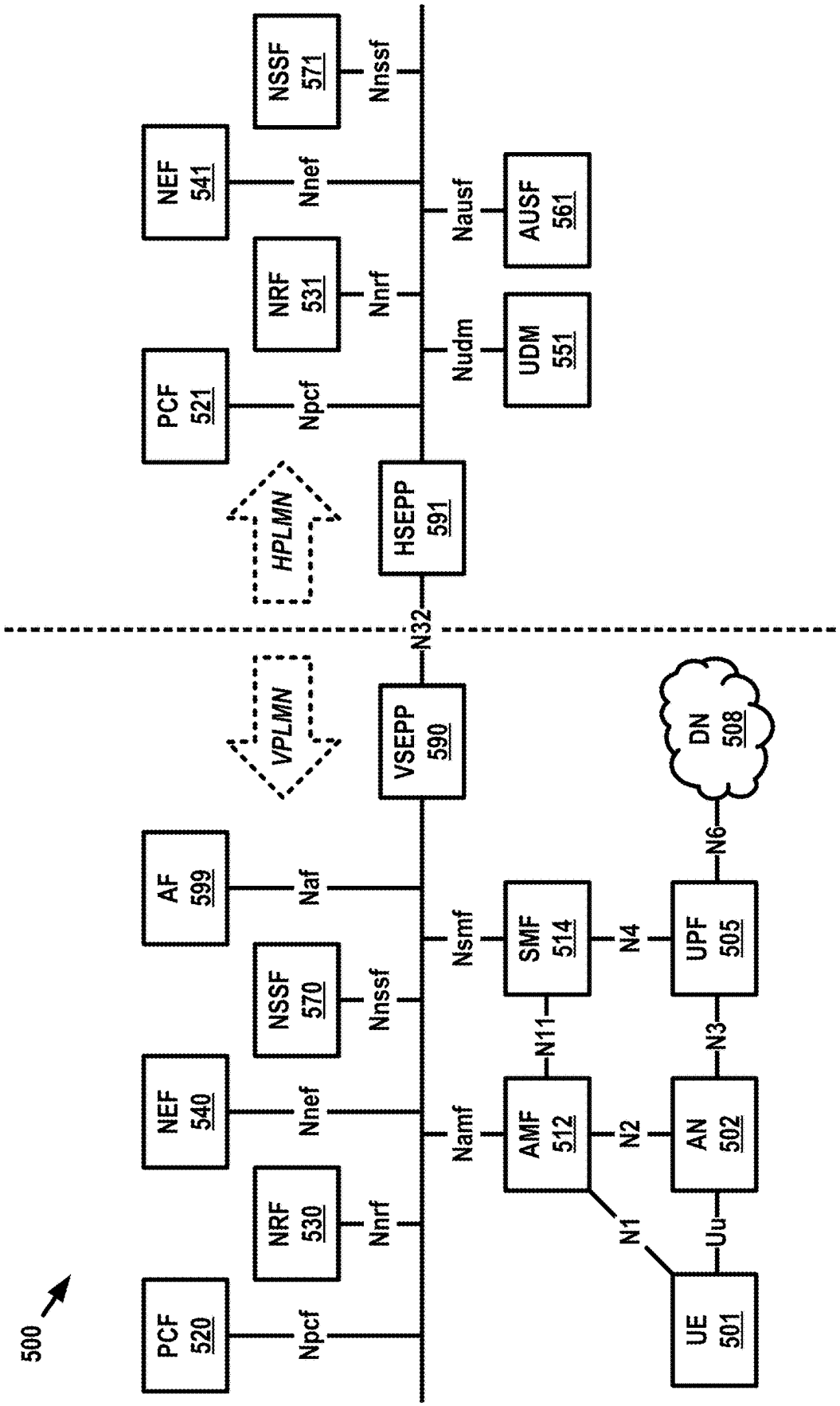
500
PCF 520
Npcf
NRF 530
Nnrf
NEF 540
Nnef
NSSF 570
Nnssf
AF 599
Naf
VPLMN
VSEPP 590
N32
HSEPP 591
HPLMN
PCF 521
Npcf
NRF 531
Nnrf
NEF 541
Nnef
NSSF 571
Nnssf
Namf
Nsmf
Nudm
Nausf
AMF 512
SMF 514
UDM 551
AUSF 561
N11
N2
N4
N1
UE 501
AN 502
UPF 505
DN 508
Uu
N3
N6

FIG. 5

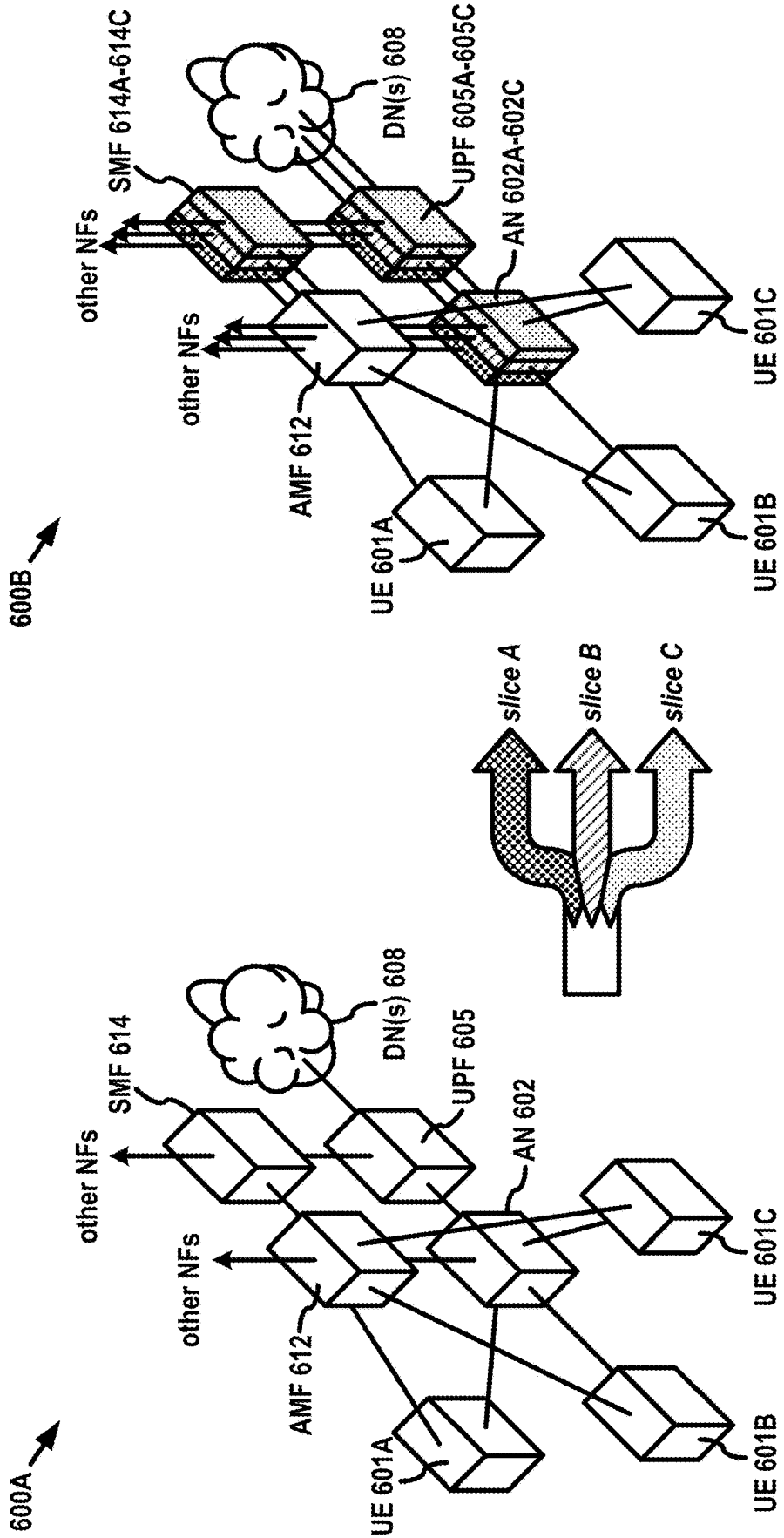
600B
other NFs
SMF 614A-614C
DN(s) 608
UPF 605A-605C
other NFs
AN 602A-602C
AMF 612
UE 601A
UE 601B
UE 601C
slice A
slice B
slice C
600A
other NFs
SMF 614
DN(s) 608
UPF 605
other NFs
AN 602
AMF 612
UE 601A
UE 601B
UE 601C

FIG. 6

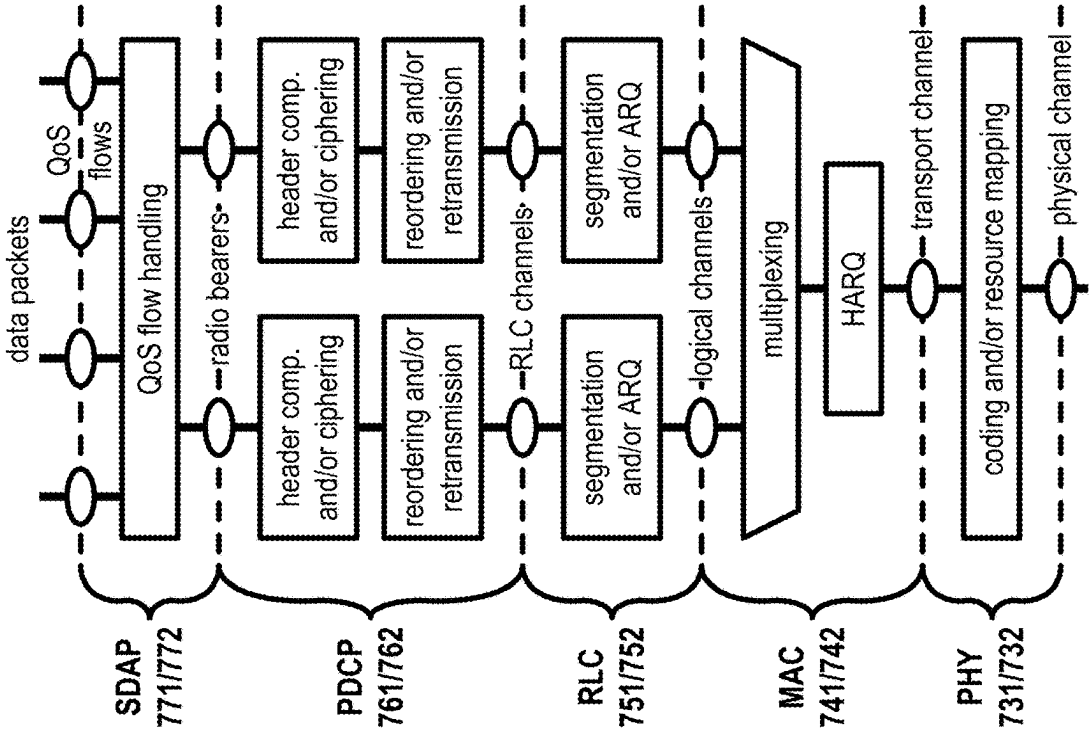

FIG. 7C

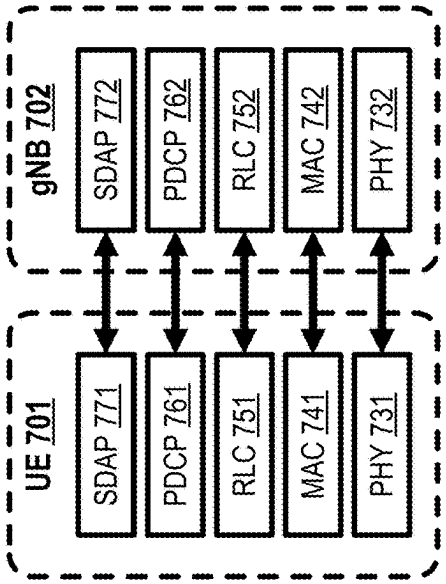

FIG. 7A

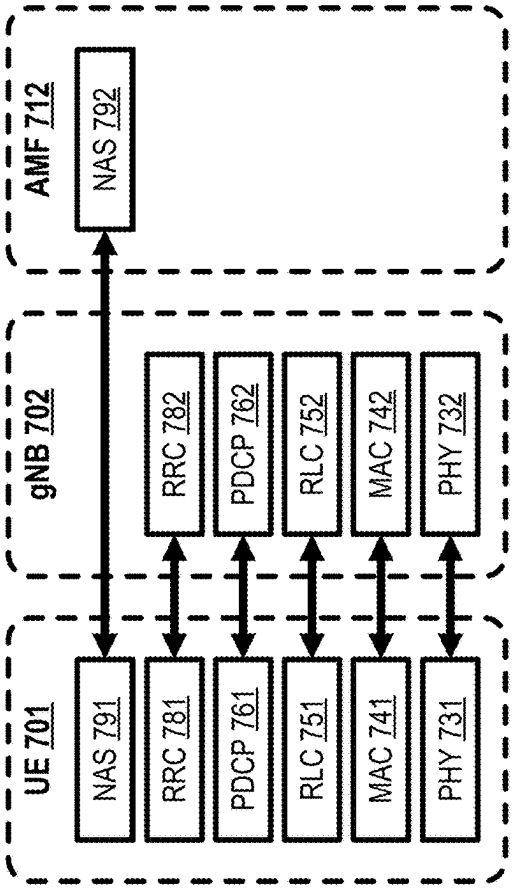

FIG. 7B

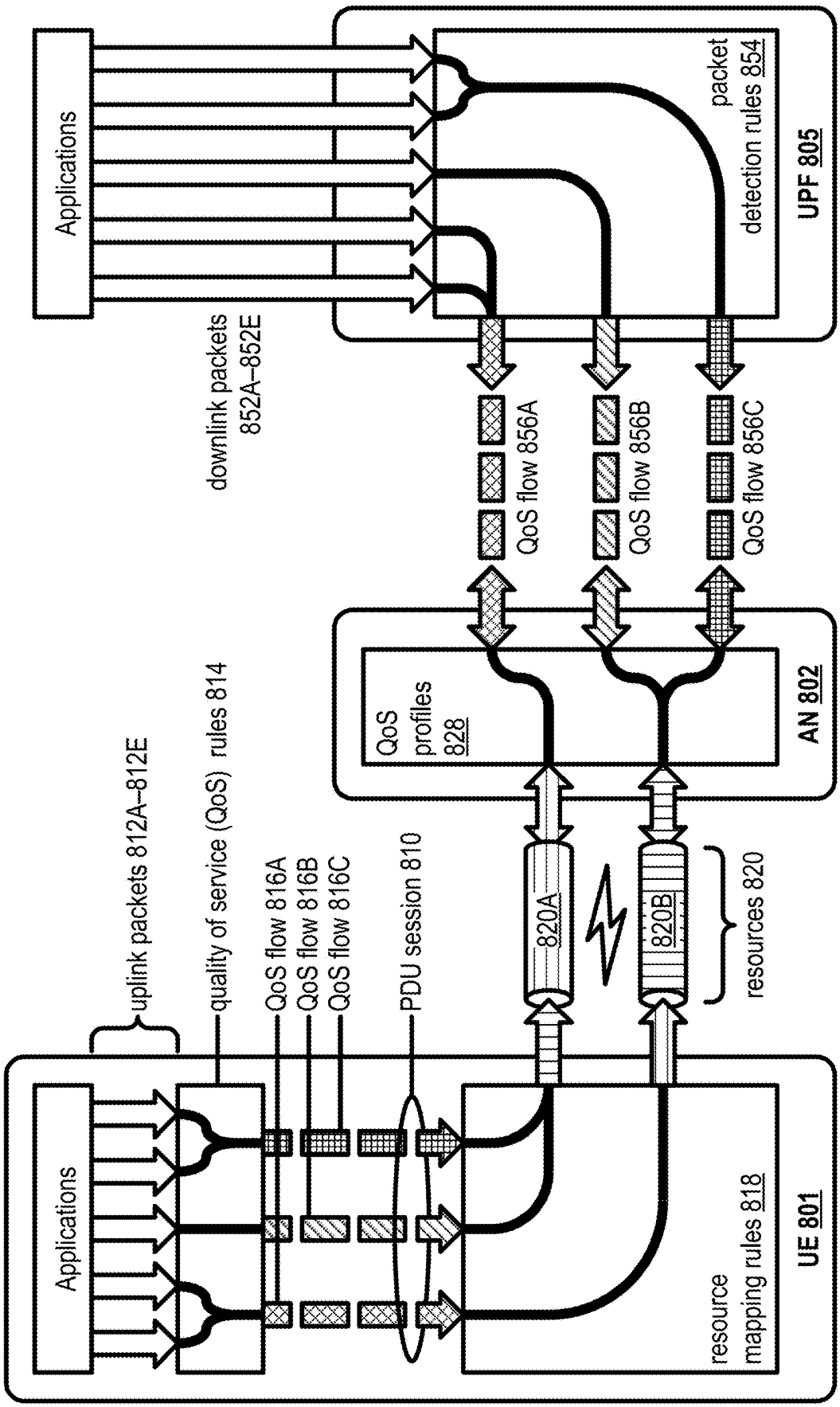
Applications
downlink packets
852A–852E
packet
detection rules 854
UPF 805
QoS flow 856A
QoS flow 856B
QoS flow 856C
QoS
profiles
828
AN 802
uplink packets 812A–812E
quality of service (QoS) rules 814
QoS flow 816A
QoS flow 816B
QoS flow 816C
PDU session 810
820A
820B
resources 820
Applications
resource
mapping rules 818
UE 801

FIG. 8

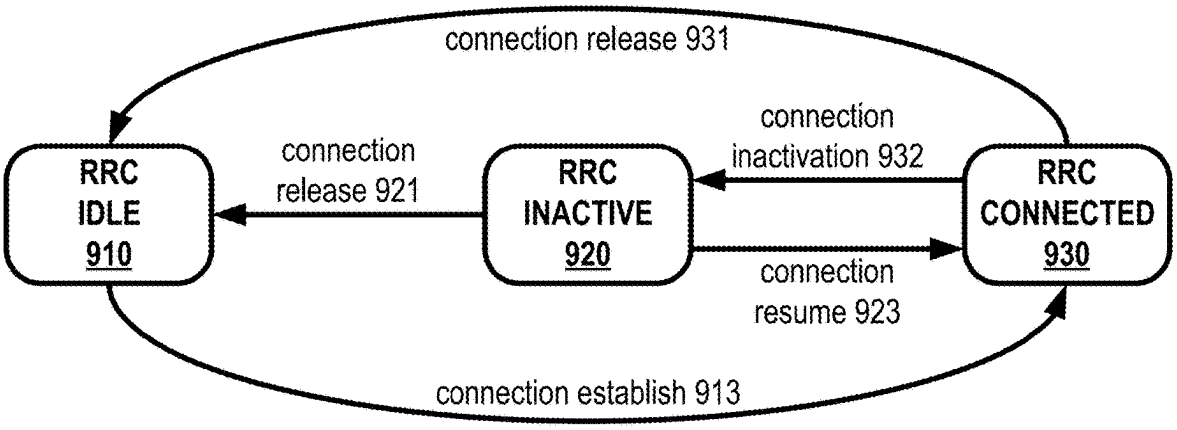

FIG. 9A

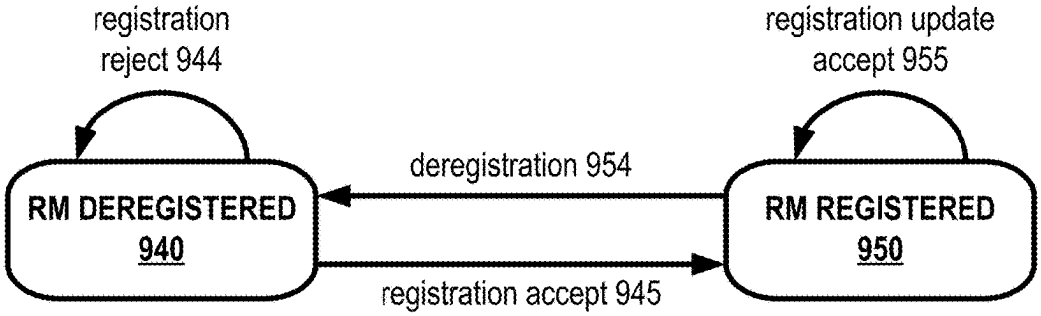

FIG. 9B

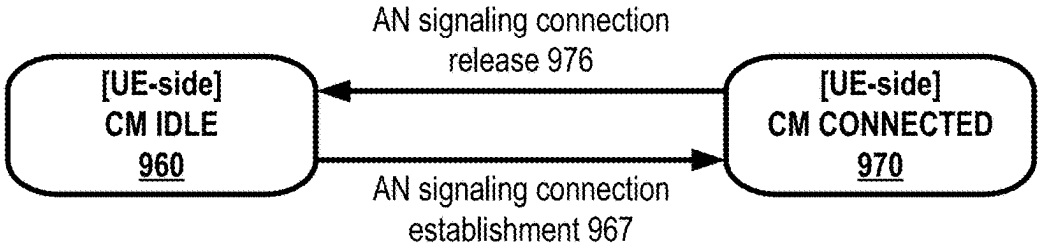

FIG. 9C

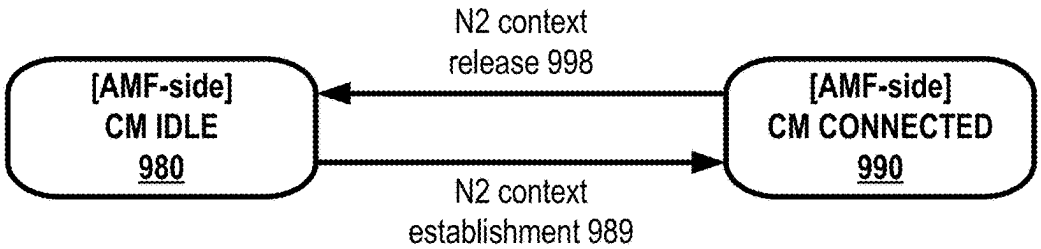

FIG. 9D

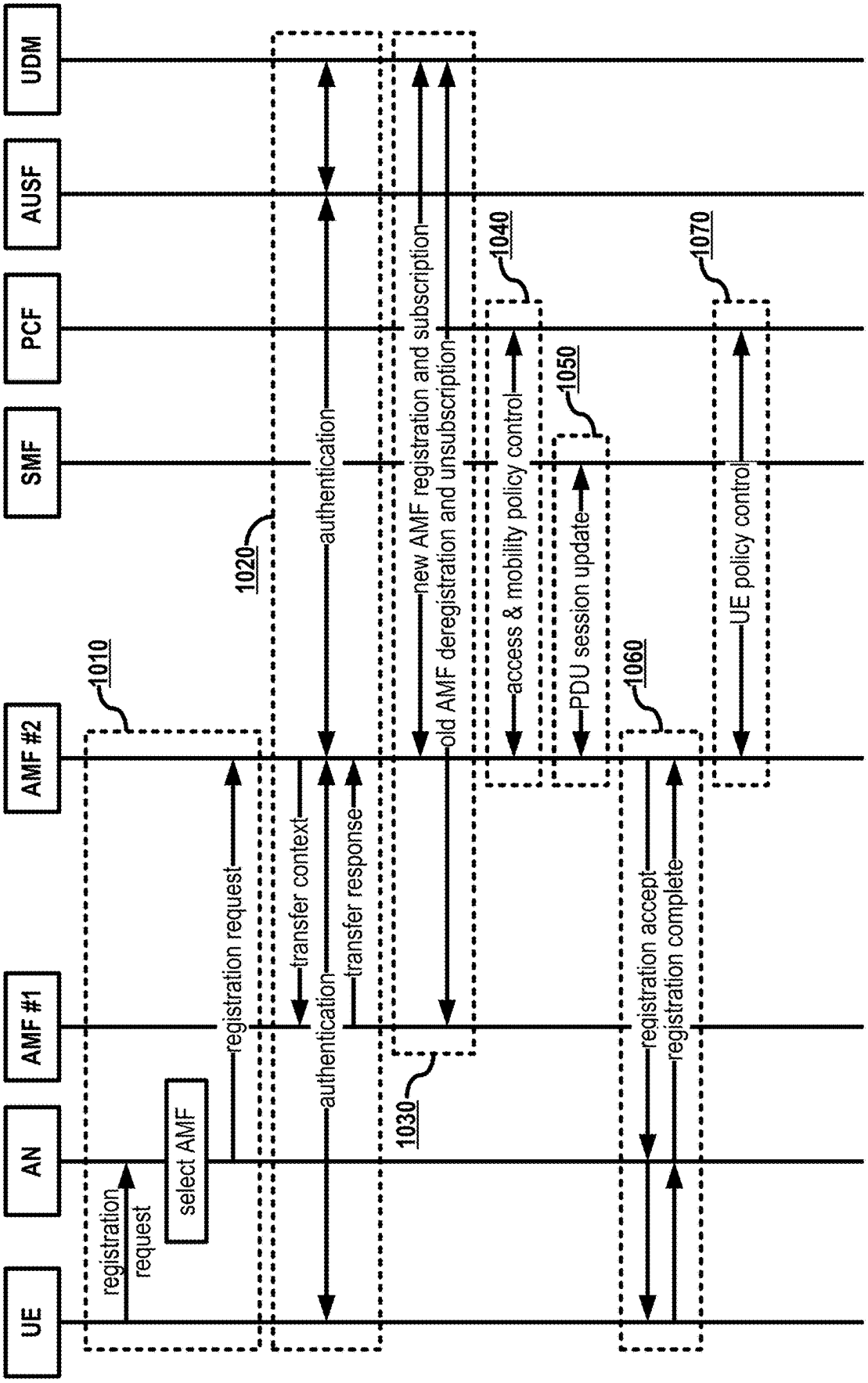
UE
AN
AMF #1
AMF #2
SMF
PCF
AUSF
UDM
registration request
select AMF
registration request
transfer context
transfer response
authentication
authentication
new AMF registration and subscription
old AMF deregistration and unsubscription
access & mobility policy control
PDU session update
UE policy control
registration accept
registration complete
1010
1020
1030
1040
1050
1060
1070

FIG. 10

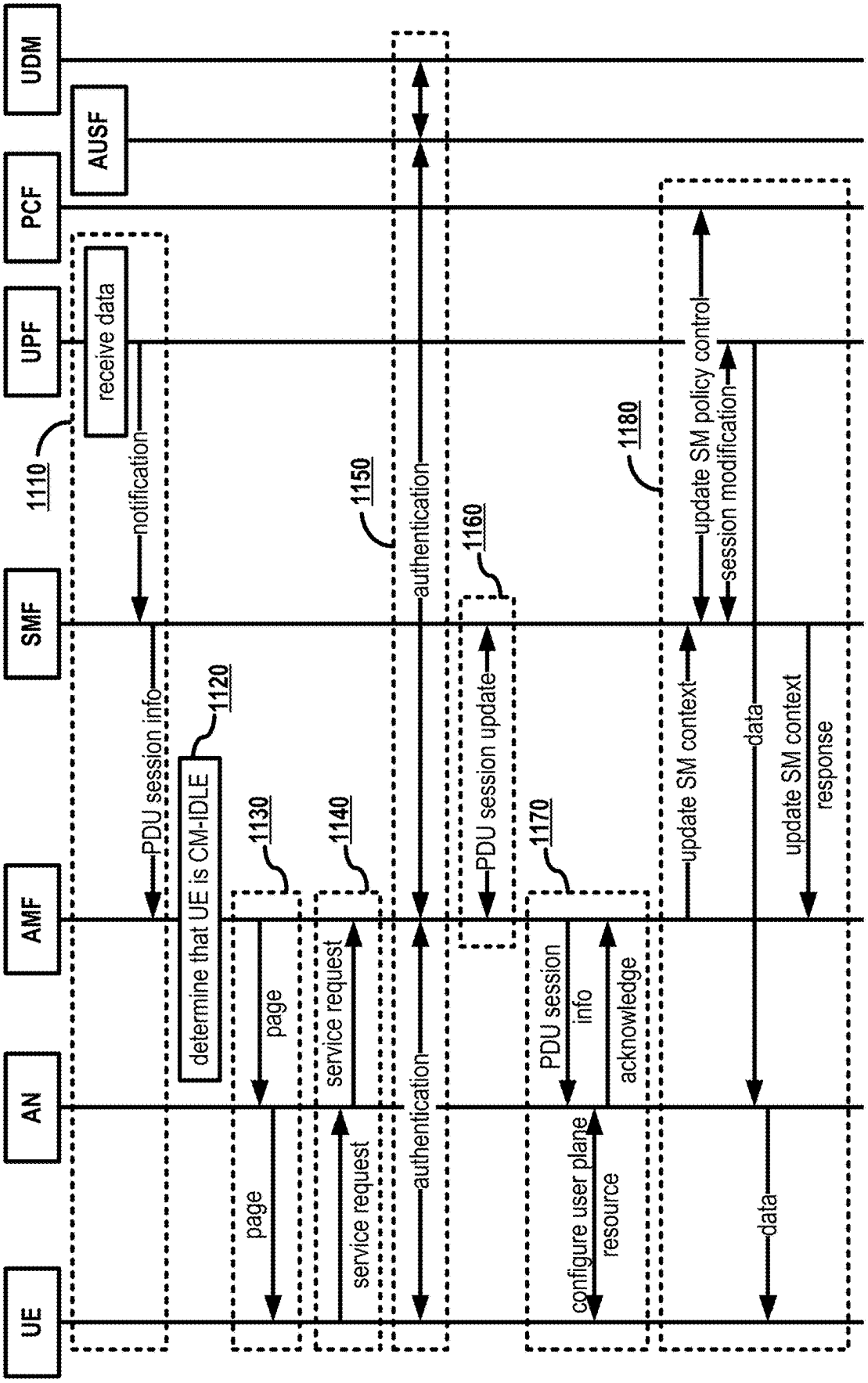
UE
AN
AMF
SMF
UPF
PCF
AUSF
UDM
1110
receive data
notification
PDU session info
1120
determine that UE is CM-IDLE
1130
page
page
1140
service request
service request
1150
authentication
authentication
1160
PDU session update
1170
PDU session info
acknowledge
configure user plane resource
1180
update SM policy control
session modification
update SM context
data
update SM context response
data

FIG. 11

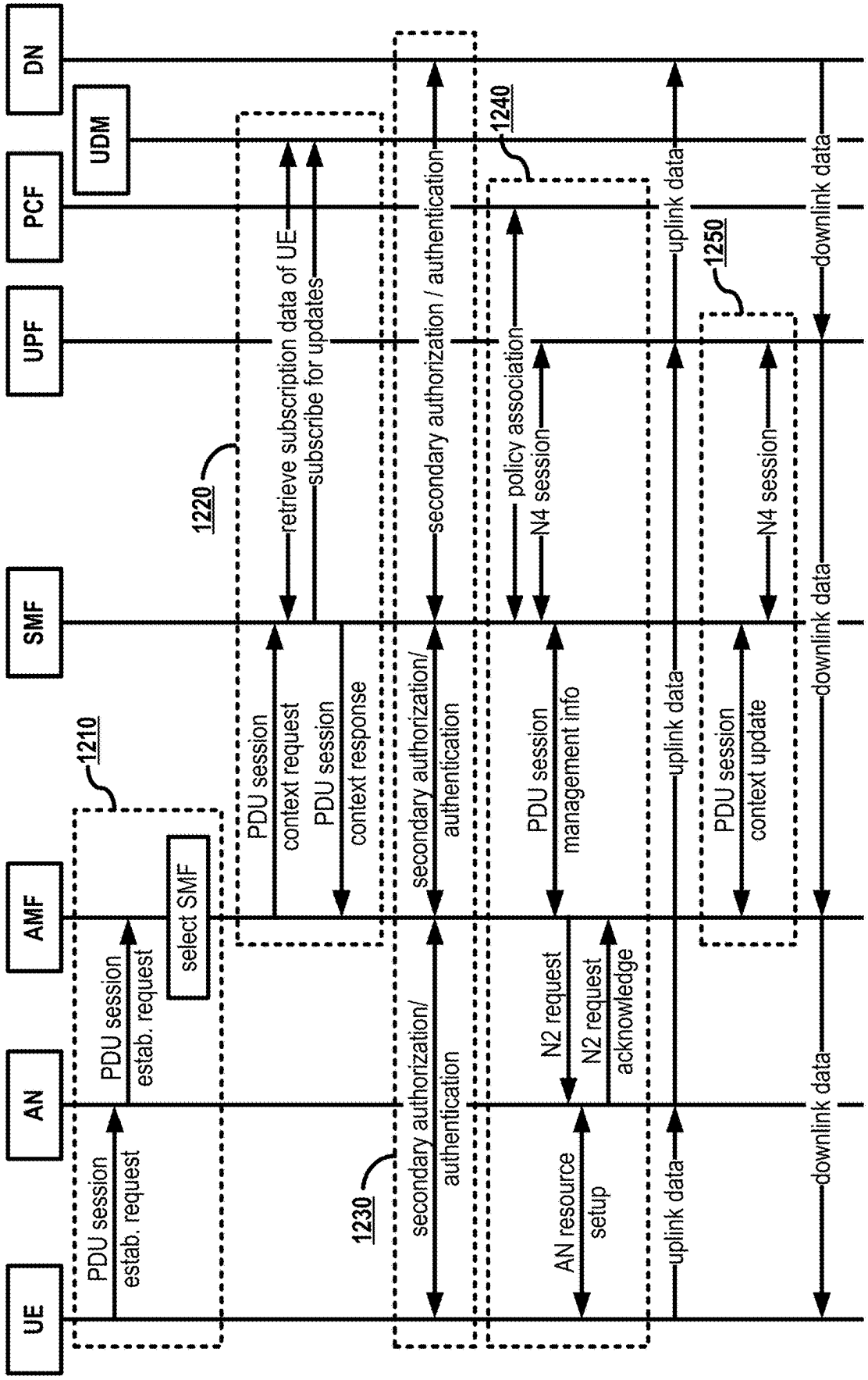
UE
AN
AMF
SMF
UPF
PCF
UDM
DN
1210
1220
1230
1240
1250
PDU session estab. request
PDU session estab. request
select SMF
PDU session context request
retrieve subscription data of UE
PDU session context response
subscribe for updates
secondary authorization/ authentication
secondary authorization / authentication
secondary authorization/ authentication
PDU session management info
policy association
N4 session
N2 request
N2 request acknowledge
AN resource setup
uplink data
uplink data
uplink data
PDU session context update
N4 session
downlink data
downlink data
downlink data

FIG. 12

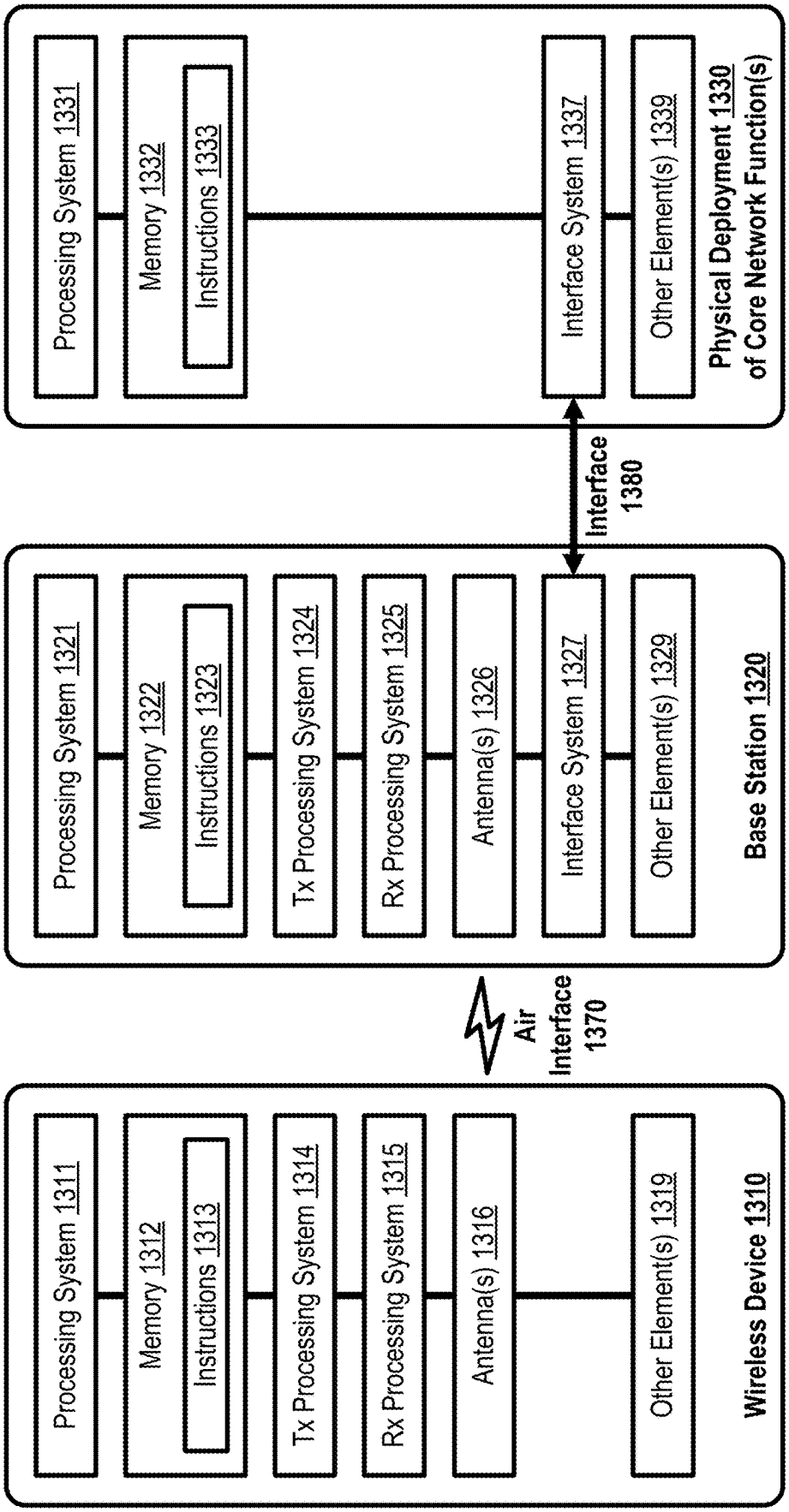
Processing System 1331
Memory 1332
Instructions 1333
Interface System 1337
Other Element(s) 1339
Physical Deployment 1330 of Core Network Function(s)
Interface 1380
Processing System 1321
Memory 1322
Instructions 1323
Tx Processing System 1324
Rx Processing System 1325
Antenna(s) 1326
Interface System 1327
Other Element(s) 1329
Base Station 1320
Air Interface 1370
Processing System 1311
Memory 1312
Instructions 1313
Tx Processing System 1314
Rx Processing System 1315
Antenna(s) 1316
Other Element(s) 1319
Wireless Device 1310

FIG. 13

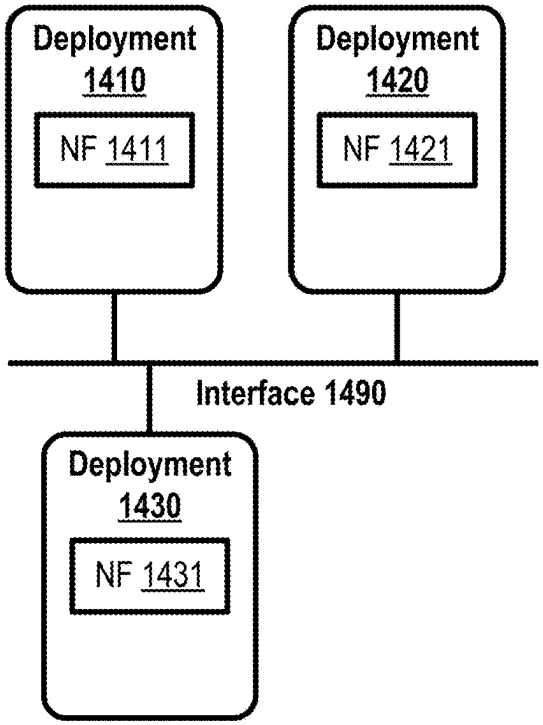

FIG. 14A

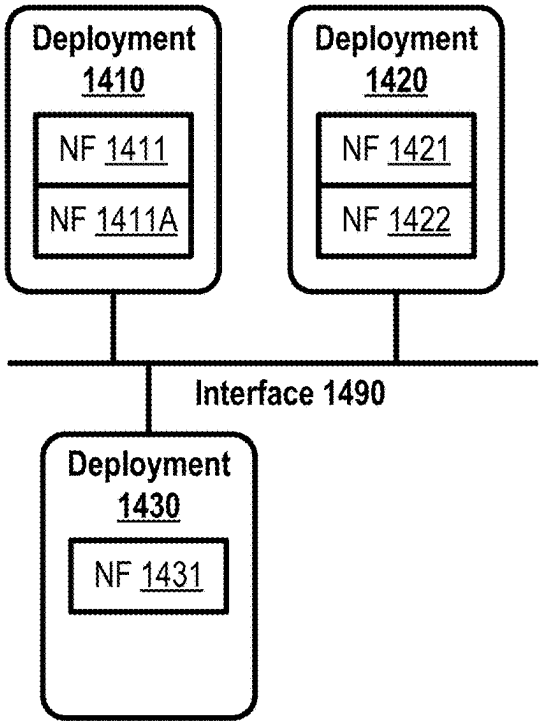

FIG. 14B

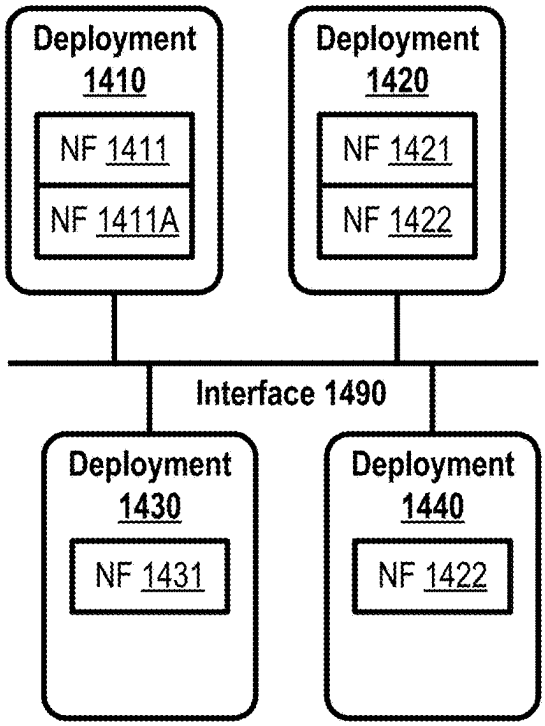

FIG. 14C

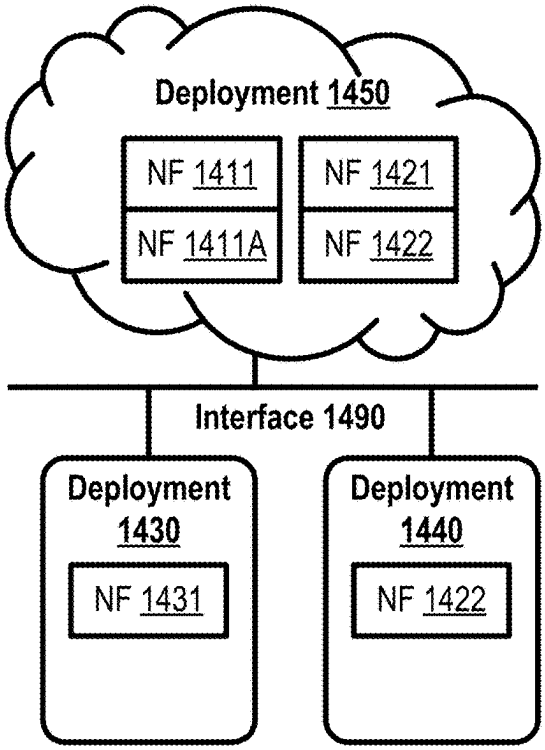

FIG. 14D

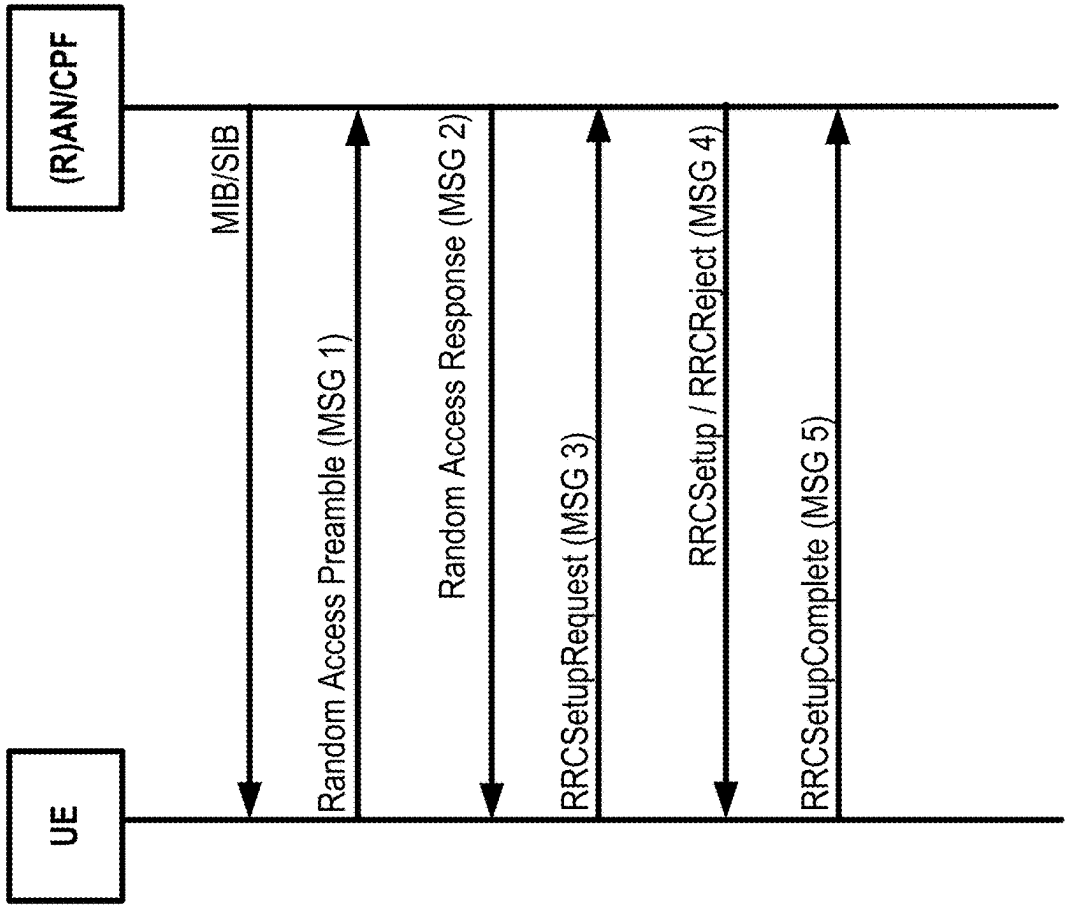
UE
(R)AN/CPF
MIB/SIB
Random Access Preamble (MSG 1)
Random Access Response (MSG 2)
RRCSetupRequest (MSG 3)
RRCSetup / RRCReject (MSG 4)
RRCSetupComplete (MSG 5)

FIG. 15

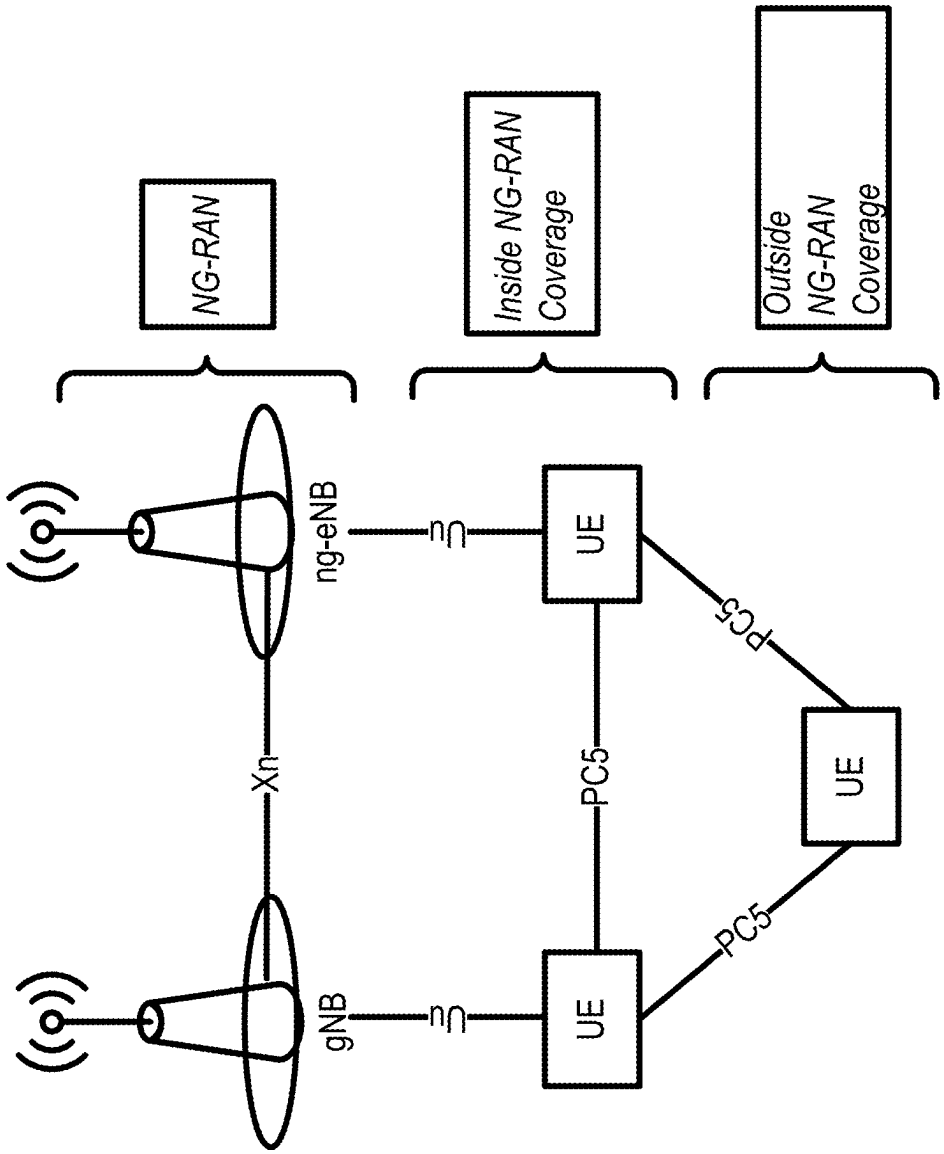
NG-RAN
Inside NG-RAN Coverage
Outside NG-RAN Coverage
gNB
ng-eNB
Xn
Uu
Uu
UE
UE
UE
PC5
PC5
PC5

FIG. 16

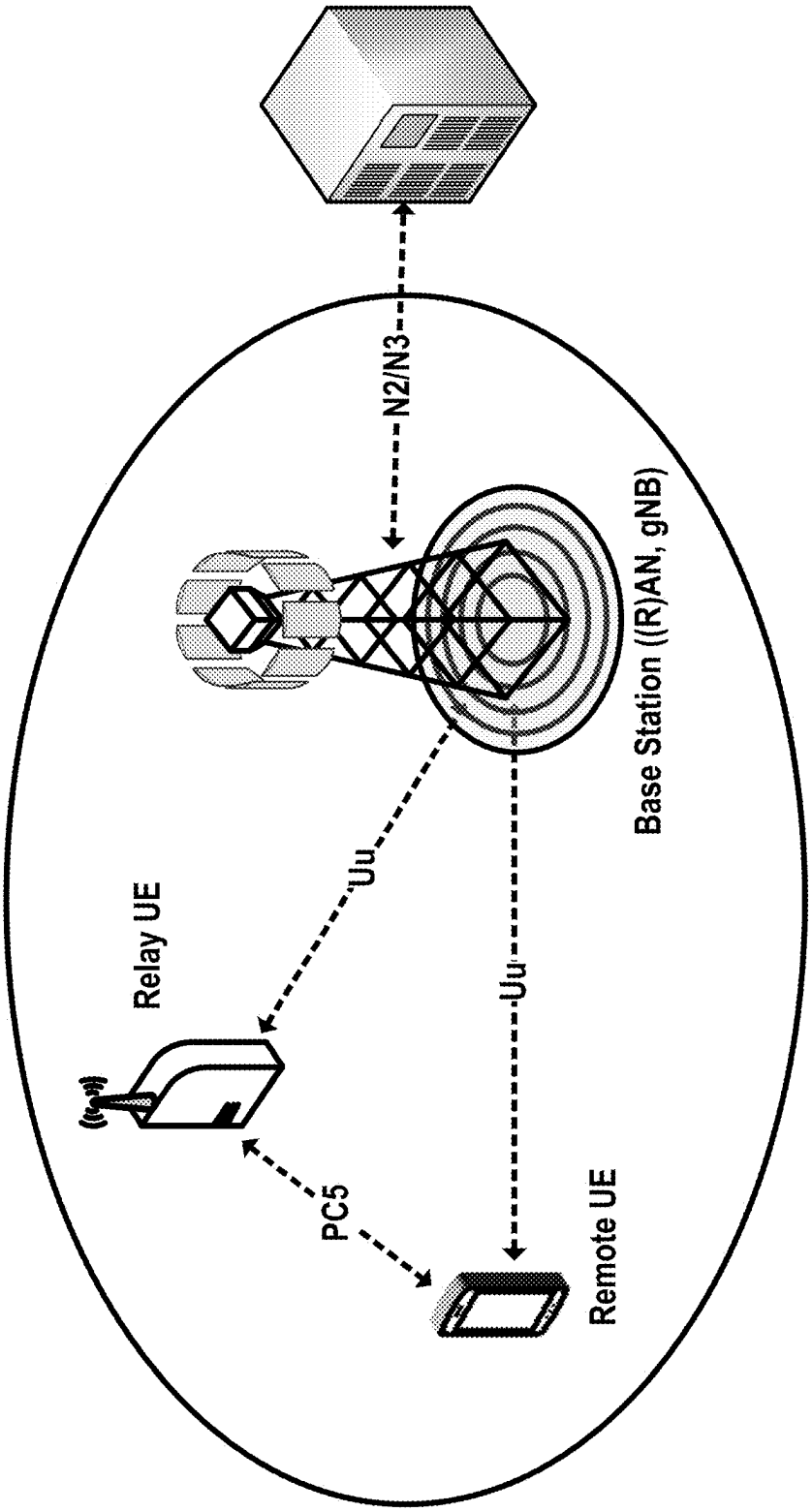

FIG. 17

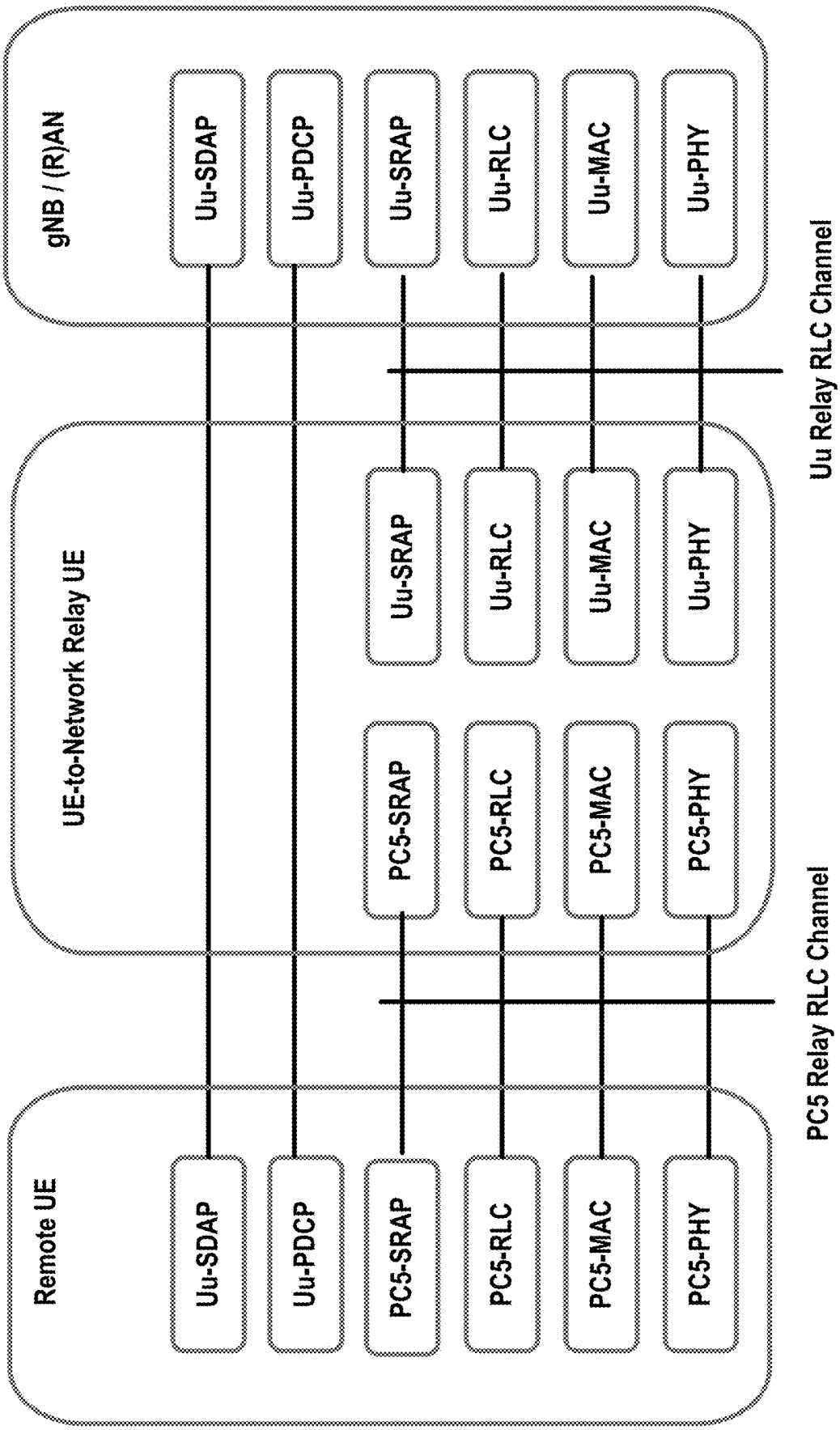
gNB / (R)AN
Uu-SDAP
Uu-PDCP
Uu-SRAP
Uu-RLC
Uu-MAC
Uu-PHY
Uu Relay RLC Channel
UE-to-Network Relay UE
Uu-SRAP
Uu-RLC
Uu-MAC
Uu-PHY
PC5-SRAP
PC5-RLC
PC5-MAC
PC5-PHY
PC5 Relay RLC Channel
Remote UE
Uu-SDAP
Uu-PDCP
PC5-SRAP
PC5-RLC
PC5-MAC
PC5-PHY

FIG. 18

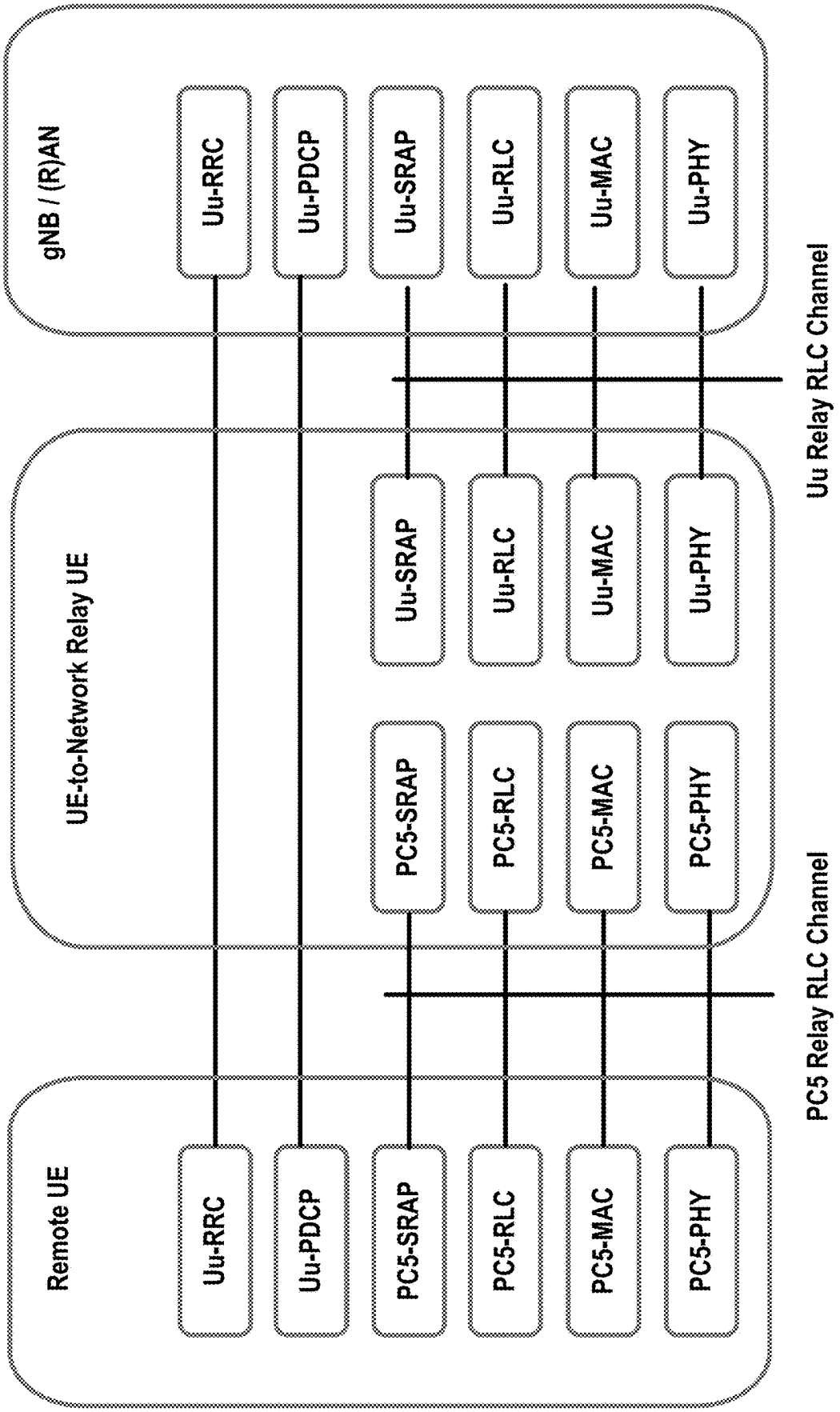
gNB / (R)AN
Uu-RRC
Uu-PDCP
Uu-SRAP
Uu-RLC
Uu-MAC
Uu-PHY
Uu Relay RLC Channel
UE-to-Network Relay UE
Uu-SRAP
Uu-RLC
Uu-MAC
Uu-PHY
PC5-SRAP
PC5-RLC
PC5-MAC
PC5-PHY
PC5 Relay RLC Channel
Remote UE
Uu-RRC
Uu-PDCP
PC5-SRAP
PC5-RLC
PC5-MAC
PC5-PHY

FIG. 19

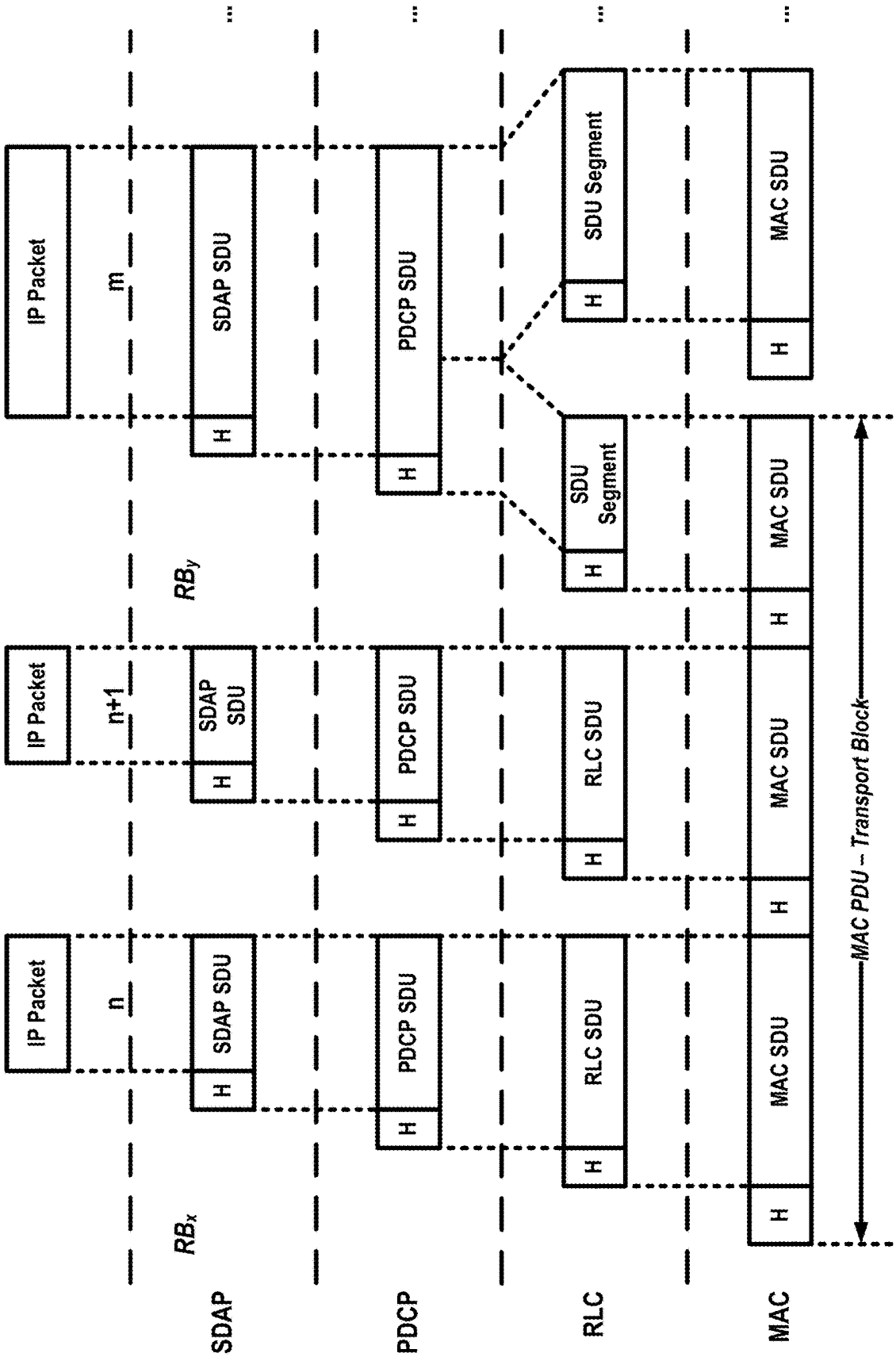
IP Packet
m
SDAP SDU
H
PDCP SDU
H
SDU Segment
H
MAC SDU
H
SDU Segment
H
MAC SDU
H
RB_y
IP Packet
n+1
SDAP SDU
H
PDCP SDU
H
RLC SDU
H
MAC SDU
H
IP Packet
n
SDAP SDU
H
PDCP SDU
H
RLC SDU
H
MAC SDU
H
RB_x
MAC PDU – Transport Block
SDAP
PDCP
RLC
MAC

FIG. 20

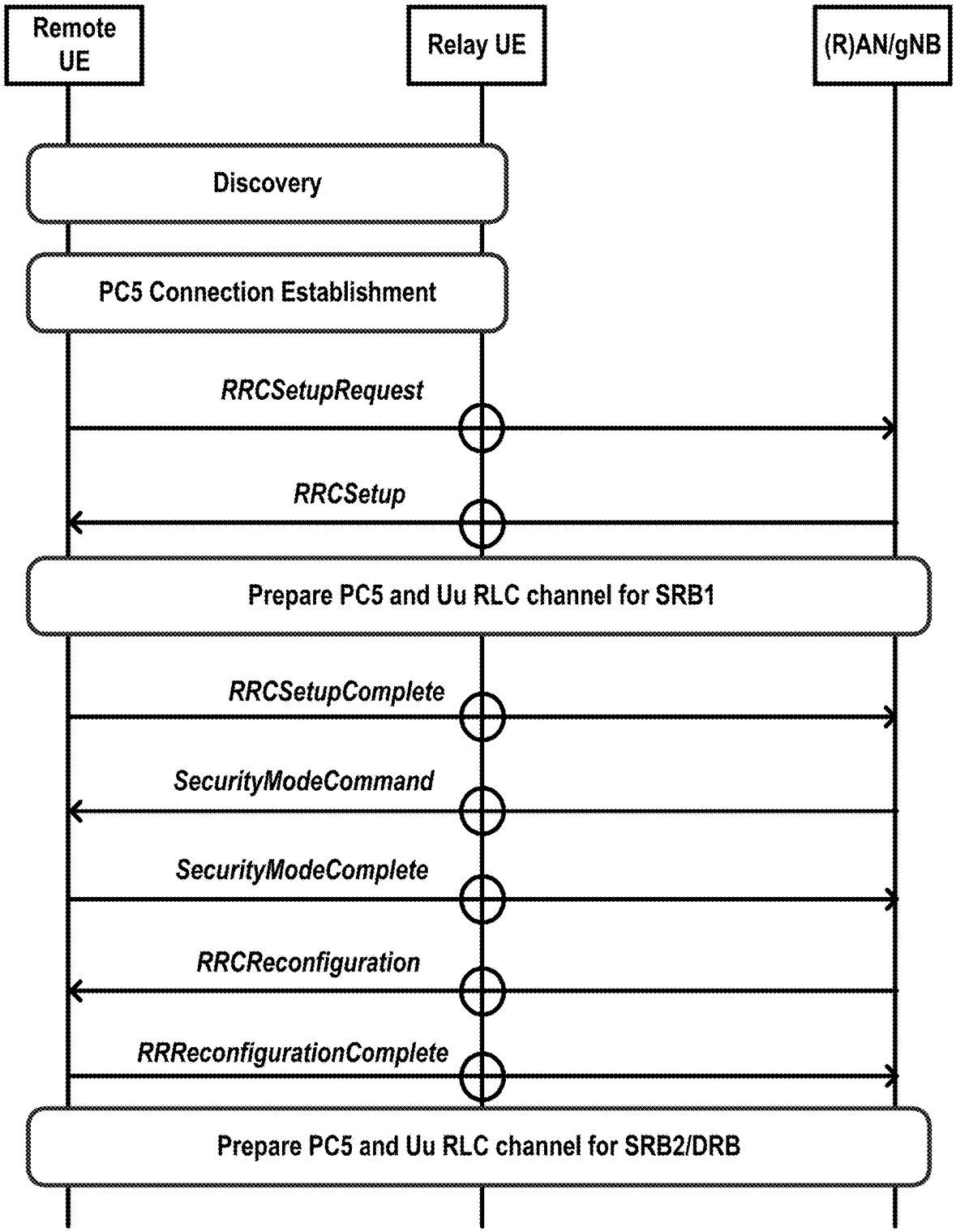
Remote UE
Relay UE
(R)AN/gNB
Discovery
PC5 Connection Establishment
RRCSetupRequest
RRCSetup
Prepare PC5 and Uu RLC channel for SRB1
RRCSetupComplete
SecurityModeCommand
SecurityModeComplete
RRCReconfiguration
RRReconfigurationComplete
Prepare PC5 and Uu RLC channel for SRB2/DRB

FIG. 21

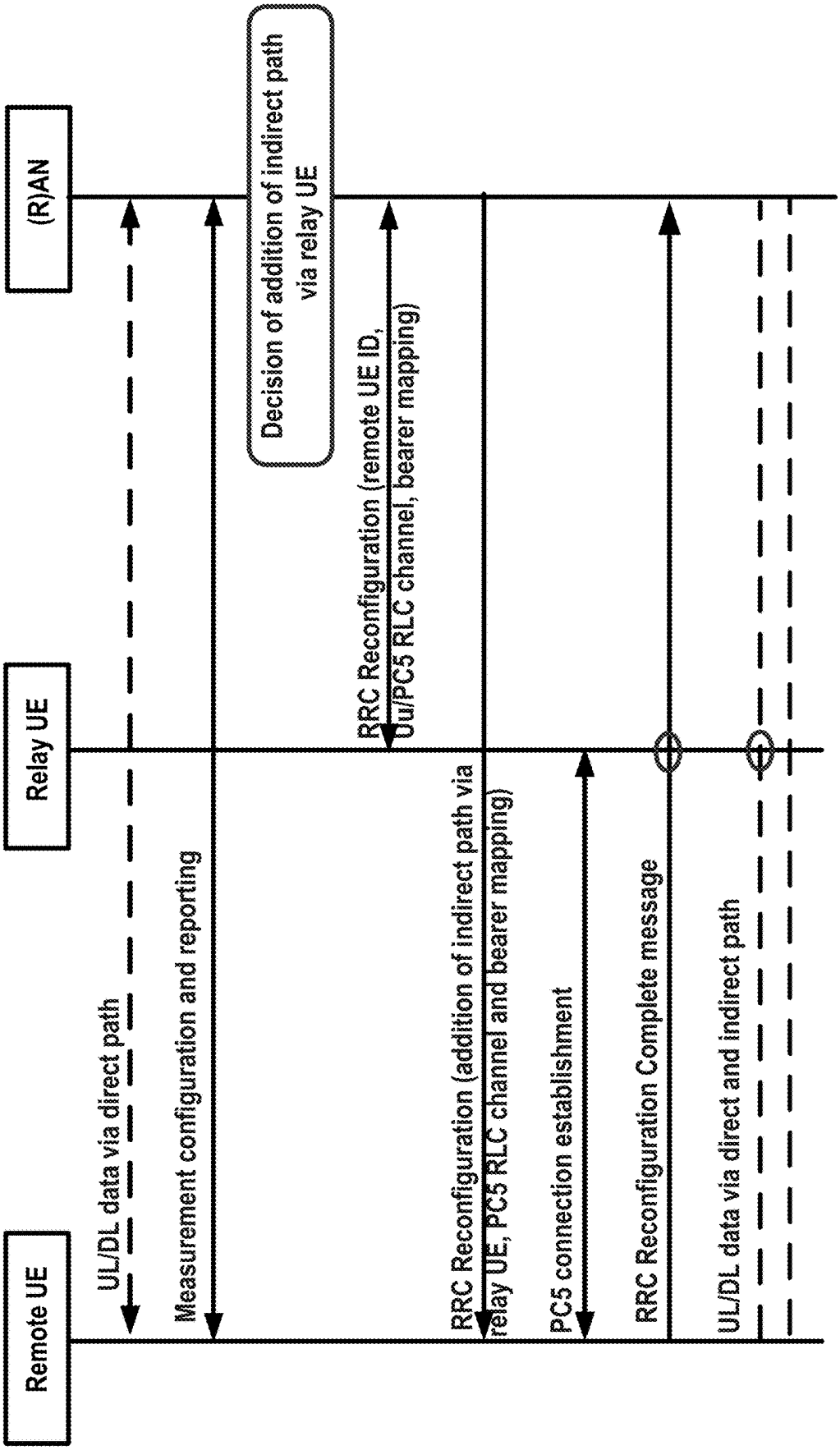
Remote UE
Relay UE
(R)AN
UL/DL data via direct path
Measurement configuration and reporting
Decision of addition of indirect path via relay UE
RRC Reconfiguration (remote UE ID, Uu/PC5 RLC channel, bearer mapping)
RRC Reconfiguration (addition of indirect path via relay UE, PC5 RLC channel and bearer mapping)
PC5 connection establishment
RRC Reconfiguration Complete message
UL/DL data via direct and indirect path

FIG. 22

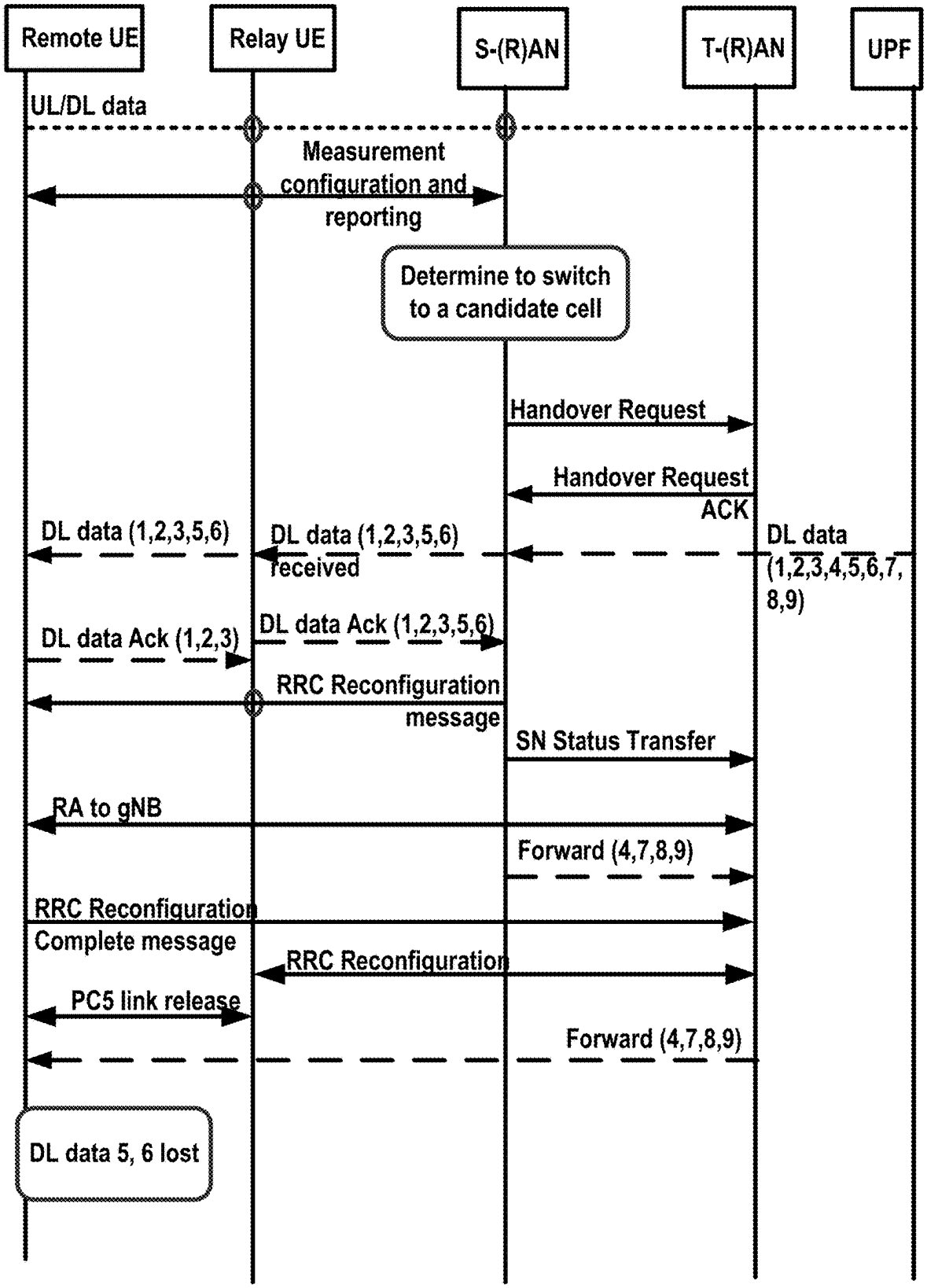
Remote UE
Relay UE
S-(R)AN
T-(R)AN
UPF
UL/DL data
Measurement configuration and reporting
Determine to switch to a candidate cell
Handover Request
Handover Request ACK
DL data (1,2,3,5,6)
DL data (1,2,3,5,6) received
DL data (1,2,3,4,5,6,7,8,9)
DL data Ack (1,2,3)
DL data Ack (1,2,3,5,6)
RRC Reconfiguration message
SN Status Transfer
RA to gNB
Forward (4,7,8,9)
RRC Reconfiguration Complete message
RRC Reconfiguration
PC5 link release
Forward (4,7,8,9)
DL data 5, 6 lost

FIG. 23

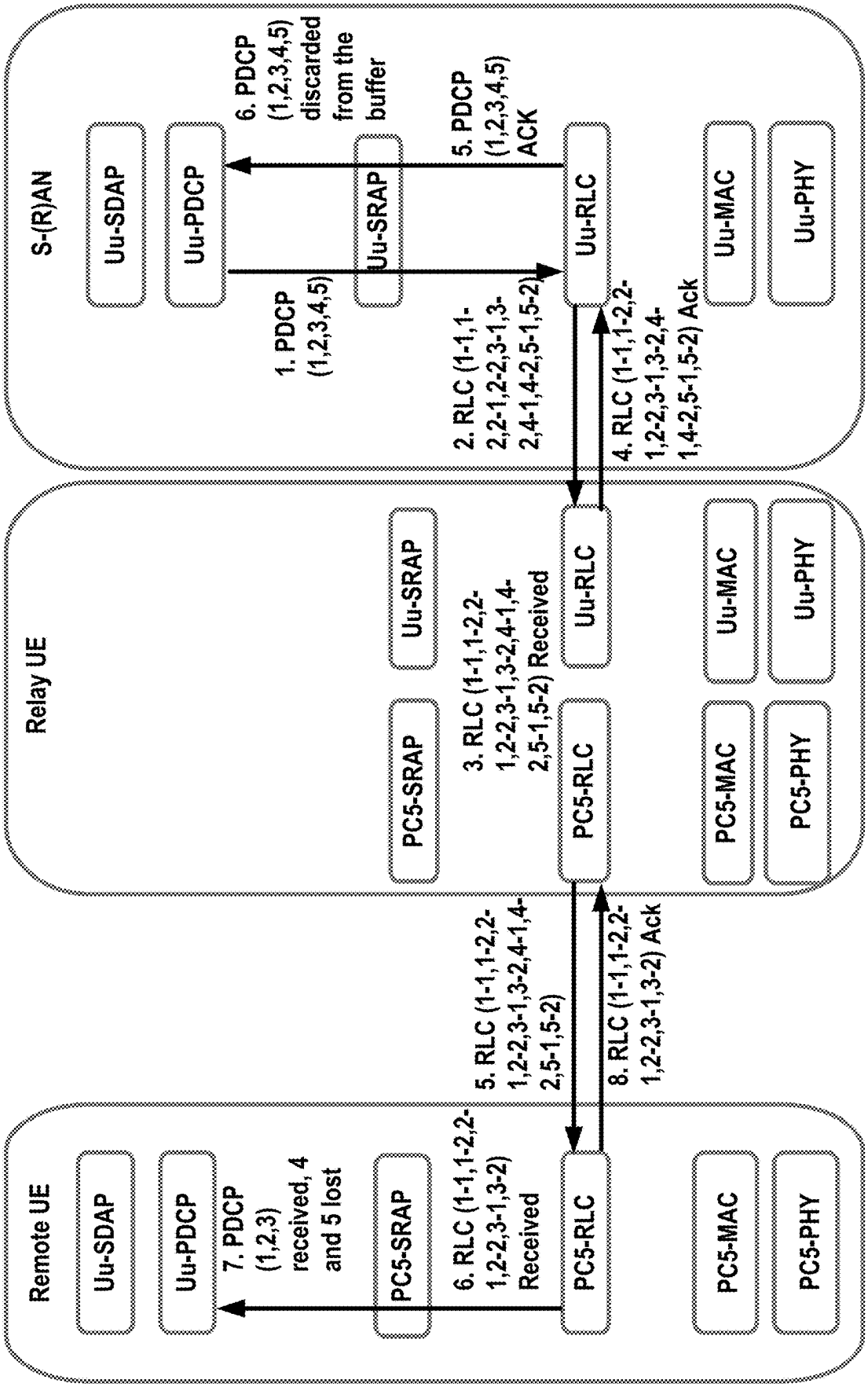
S-(R)AN
Uu-SDAP
Uu-PDCP
Uu-SRAP
Uu-RLC
Uu-MAC
Uu-PHY
1. PDCP (1,2,3,4,5)
2. RLC (1-1,1-2,2-2,2-1,2-2,3-1,3-2,4-1,4-2,5-1,5-2)
3. RLC (1-1,1-2,2-1,2-2,3-1,3-2,4-1,4-2,5-1,5-2) Received
4. RLC (1-1,1-2,2-1,2-2,3-1,3-2,4-1,4-2,5-1,5-2) Ack
5. PDCP (1,2,3,4,5) ACK
6. PDCP (1,2,3,4,5) discarded from the buffer
Relay UE
PC5-SRAP
PC5-RLC
PC5-MAC
PC5-PHY
Remote UE
7. PDCP (1,2,3) received, 4 and 5 lost
5. RLC (1-1,1-2,2-1,2-2,3-1,3-2,4-1,4-2,5-1,5-2)
6. RLC (1-1,1-2,2-1,2-2,3-1,3-2) Received
8. RLC (1-1,1-2,2-1,2-2,3-1,3-2) Ack

FIG. 24

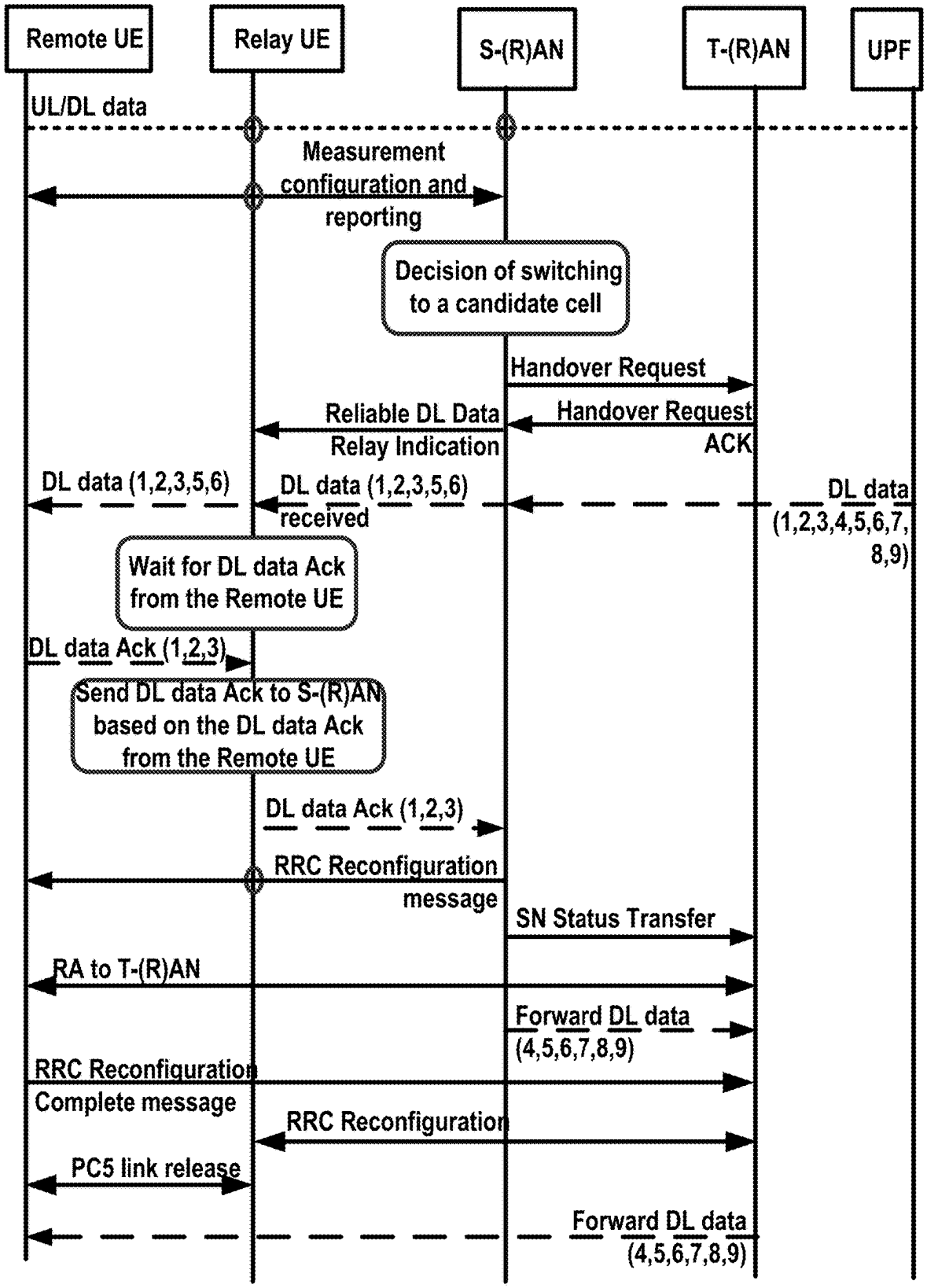
Remote UE
Relay UE
S-(R)AN
T-(R)AN
UPF
UL/DL data
Measurement configuration and reporting
Decision of switching to a candidate cell
Handover Request
Handover Request ACK
Reliable DL Data Relay Indication
DL data (1,2,3,5,6)
DL data (1,2,3,5,6) received
DL data (1,2,3,4,5,6,7,8,9)
Wait for DL data Ack from the Remote UE
DL data Ack (1,2,3)
Send DL data Ack to S-(R)AN based on the DL data Ack from the Remote UE
DL data Ack (1,2,3)
RRC Reconfiguration message
SN Status Transfer
RA to T-(R)AN
Forward DL data (4,5,6,7,8,9)
RRC Reconfiguration Complete message
RRC Reconfiguration
PC5 link release
Forward DL data (4,5,6,7,8,9)

FIG. 25

RRCReconfiguration Message

```
-- ASN1START
-- TAG-RRCRECONFIGURATION-START
RRCReconfiguration ::=          SEQUENCE {
  rrc-TransactionIdentifier       RRC-TransactionIdentifier,
  criticalExtensions              CHOICE {
    rrcReconfiguration              RRCReconfiguration-IEs,
    criticalExtensionsFuture        SEQUENCE {}
  } }
RRCReconfiguration-IEs ::=      SEQUENCE {
  radioBearerConfig               RadioBearerConfig                                   OPTIONAL, -- Need M
  secondaryCellGroup              OCTET STRING (CONTAINING CellGroupConfig)           OPTIONAL, -- Cond SCG
  measConfig                      MeasConfig                                          OPTIONAL, -- Need M
  lateNonCriticalExtension        OCTET STRING                                        OPTIONAL,
 }
RRCReconfiguration-v1530-IEs ::=      SEQUENCE {
  masterCellGroup                 OCTET STRING (CONTAINING CellGroupConfig)           OPTIONAL, -- Need M
  fullConfig                      ENUMERATED {true}                                   OPTIONAL, -- Cond FullConfig
  dedicatedNAS-MessageList        SEQUENCE (SIZE(1..maxDRB)) OF DedicatedNAS-Message  OPTIONAL, -- Cond nonHO
  dedicatedSIB1-Delivery          OCTET STRING (CONTAINING SIB1)                      OPTIONAL, -- Need N
  dedicatedSystemInformationDelivery  OCTET STRING (CONTAINING SystemInformation)     OPTIONAL, -- Need N
 }
RRCReconfiguration-v1610-IEs ::=      SEQUENCE {
  iab-IP-AddressConfigurationList-r16  IAB-IP-AddressConfigurationList-r16            OPTIONAL, -- Need M
  daps-SourceRelease-r16          ENUMERATED{true}                                    OPTIONAL, -- Need N
  dedicatedPosSysInfoDelivery-r16 OCTET STRING (CONTAINING PosSystemInformation-r16-IEs)  OPTIONAL, -- Need N
  sl-ConfigDedicatedNR-r16        SetupRelease {SL-ConfigDedicatedNR-r16}             OPTIONAL, -- Need M
  sl-ConfigDedicatedEUTRA-Info-r16  SetupRelease {SL-ConfigDedicatedEUTRA-Info-r16}   OPTIONAL, -- Need M
  targetCellSMTC-SCG-r16          SSB-MTC                                             OPTIONAL, -- Need S
 }
RRCReconfiguration-v1700-IEs ::=      SEQUENCE {
  sl-L2RelayUE-Config-r17         SetupRelease { SL-L2RelayUE-Config-r17 }            OPTIONAL, -- Need M
  sl-L2RemoteUE-Config-r17        SetupRelease { SL-L2RemoteUE-Config-r17 }           OPTIONAL, -- Need M
  dedicatedPagingDelivery-r17     OCTET STRING (CONTAINING Paging)                    OPTIONAL, -- Cond PagingRelay
  needForGapNCSG-ConfigNR-r17     SetupRelease {NeedForGapNCSG-ConfigNR-r17}          OPTIONAL, -- Need M
  needForGapNCSG-ConfigEUTRA-r17  SetupRelease {NeedForGapNCSG-ConfigEUTRA-r17}       OPTIONAL, -- Need M
RRCReconfiguration-v1610-IEs ::=      SEQUENCE {
sl-ReliableDataRelayIndication    ENUMERATED {true}                                   OPTIONAL
}
 -- TAG-RRCRECONFIGURATION-STOP
-- ASN1STOP
```

FIG. 26

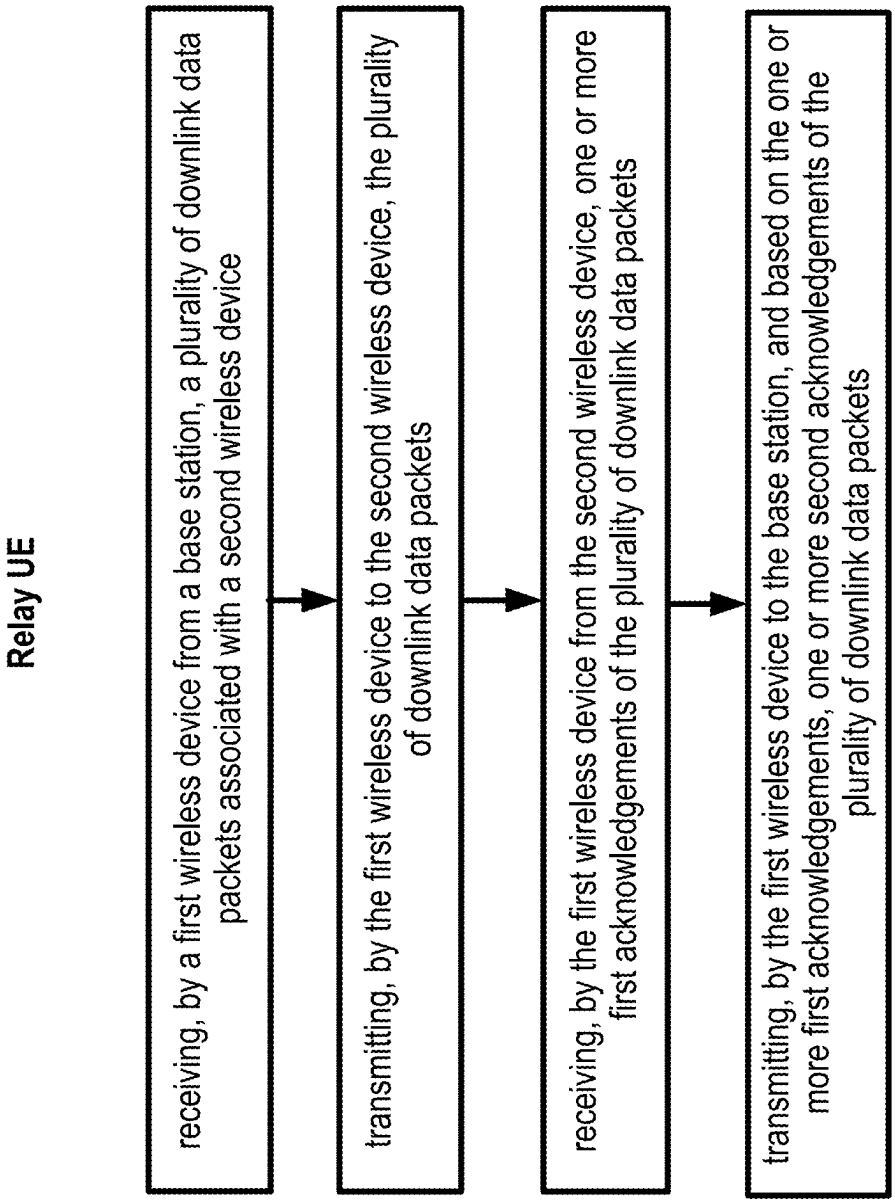
Relay UE
receiving, by a first wireless device from a base station, a plurality of downlink data packets associated with a second wireless device
transmitting, by the first wireless device to the second wireless device, the plurality of downlink data packets
receiving, by the first wireless device from the second wireless device, one or more first acknowledgements of the plurality of downlink data packets
transmitting, by the first wireless device to the base station, and based on the one or more first acknowledgements, one or more second acknowledgements of the plurality of downlink data packets

FIG. 27

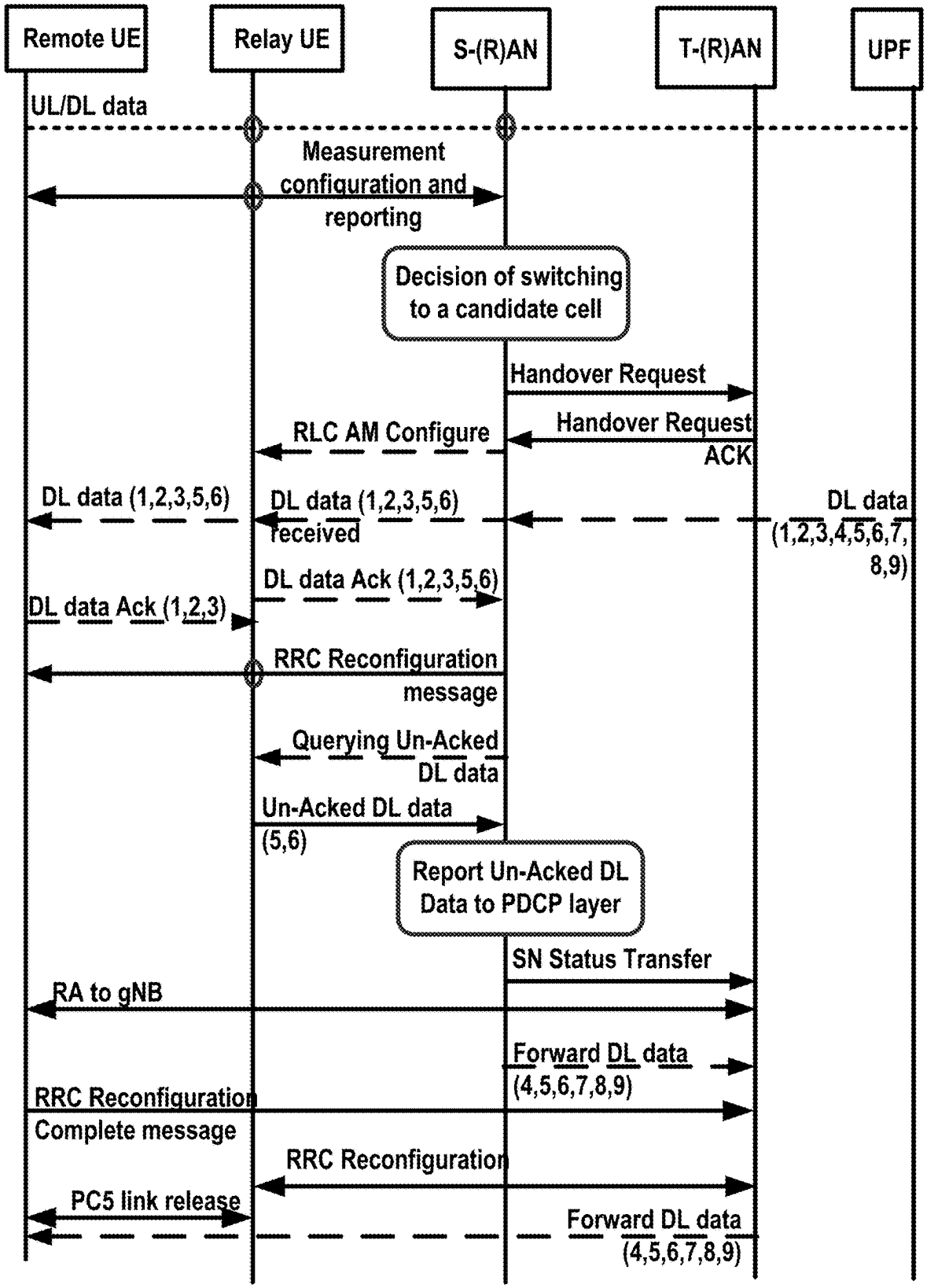
Remote UE
Relay UE
S-(R)AN
T-(R)AN
UPF
UL/DL data
Measurement configuration and reporting
Decision of switching to a candidate cell
Handover Request
Handover Request ACK
RLC AM Configure
DL data (1,2,3,5,6)
DL data (1,2,3,5,6) received
DL data (1,2,3,4,5,6,7,8,9)
DL data Ack (1,2,3,5,6)
DL data Ack (1,2,3)
RRC Reconfiguration message
Querying Un-Acked DL data
Un-Acked DL data (5,6)
Report Un-Acked DL Data to PDCP layer
SN Status Transfer
RA to gNB
Forward DL data (4,5,6,7,8,9)
RRC Reconfiguration Complete message
RRC Reconfiguration
PC5 link release
Forward DL data (4,5,6,7,8,9)

FIG. 28

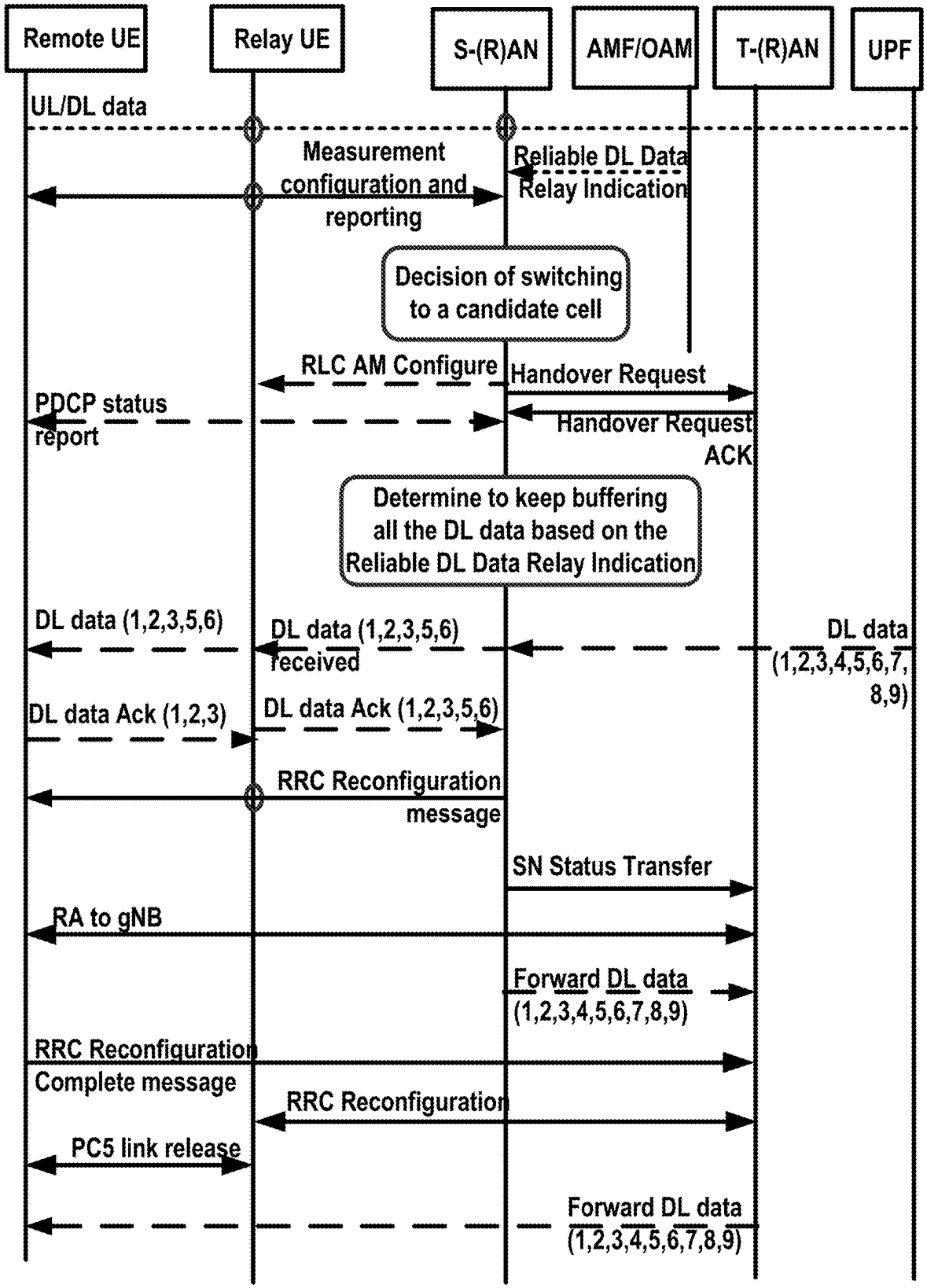
Remote UE
Relay UE
S-(R)AN
AMF/OAM
T-(R)AN
UPF
UL/DL data
Measurement configuration and reporting
Reliable DL Data Relay Indication
Decision of switching to a candidate cell
RLC AM Configure
Handover Request
PDCP status report
Handover Request ACK
Determine to keep buffering all the DL data based on the Reliable DL Data Relay Indication
DL data (1,2,3,5,6)
DL data (1,2,3,5,6) received
DL data (1,2,3,4,5,6,7,8,9)
DL data Ack (1,2,3)
DL data Ack (1,2,3,5,6)
RRC Reconfiguration message
SN Status Transfer
RA to gNB
Forward DL data (1,2,3,4,5,6,7,8,9)
RRC Reconfiguration Complete message
RRC Reconfiguration
PC5 link release
Forward DL data (1,2,3,4,5,6,7,8,9)

FIG. 29

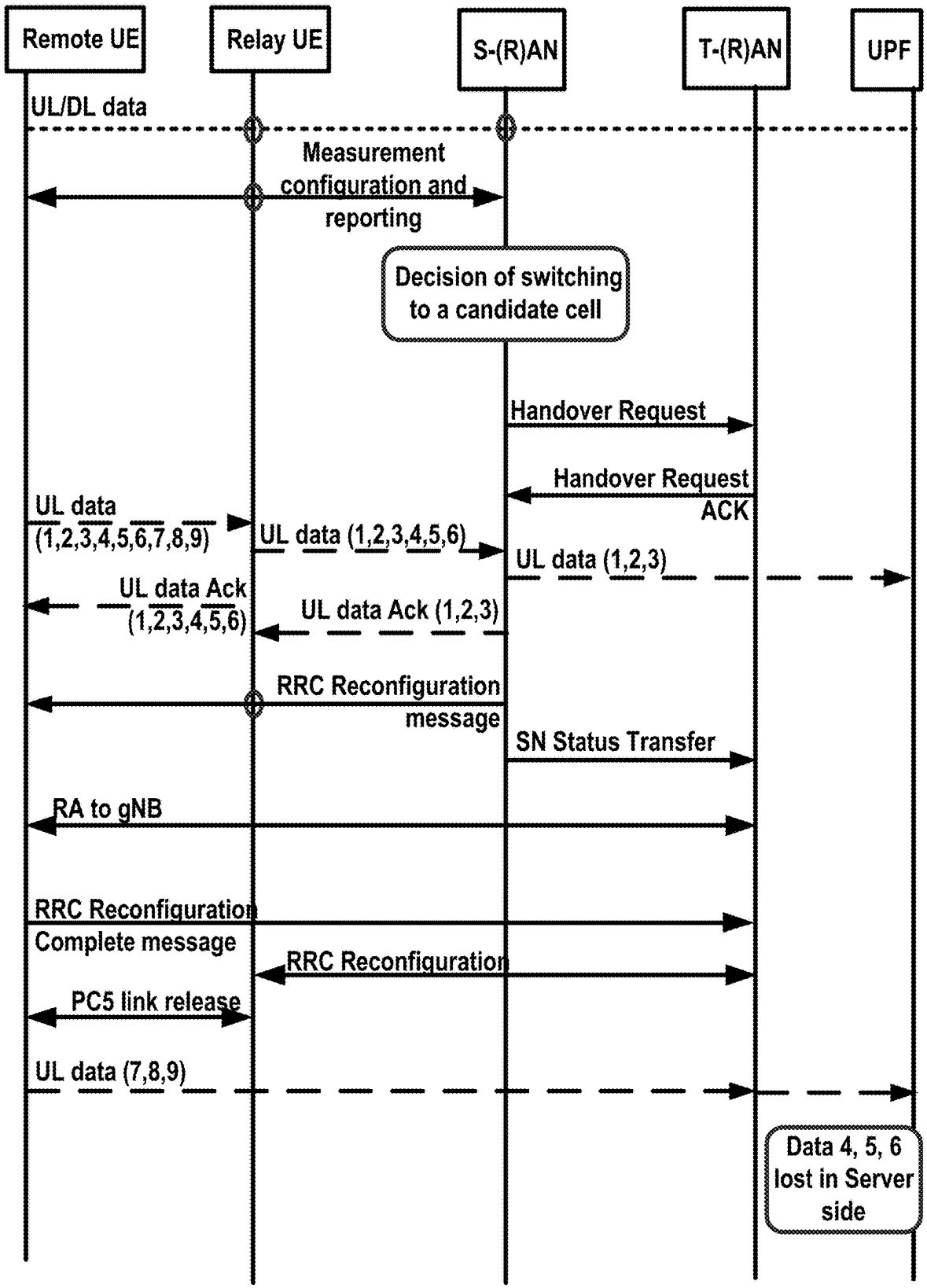
Remote UE
Relay UE
S-(R)AN
T-(R)AN
UPF
UL/DL data
Measurement configuration and reporting
Decision of switching to a candidate cell
Handover Request
Handover Request ACK
UL data (1,2,3,4,5,6,7,8,9)
UL data (1,2,3,4,5,6)
UL data (1,2,3)
UL data Ack (1,2,3,4,5,6)
UL data Ack (1,2,3)
RRC Reconfiguration message
SN Status Transfer
RA to gNB
RRC Reconfiguration Complete message
RRC Reconfiguration
PC5 link release
UL data (7,8,9)
Data 4, 5, 6 lost in Server side

FIG. 30

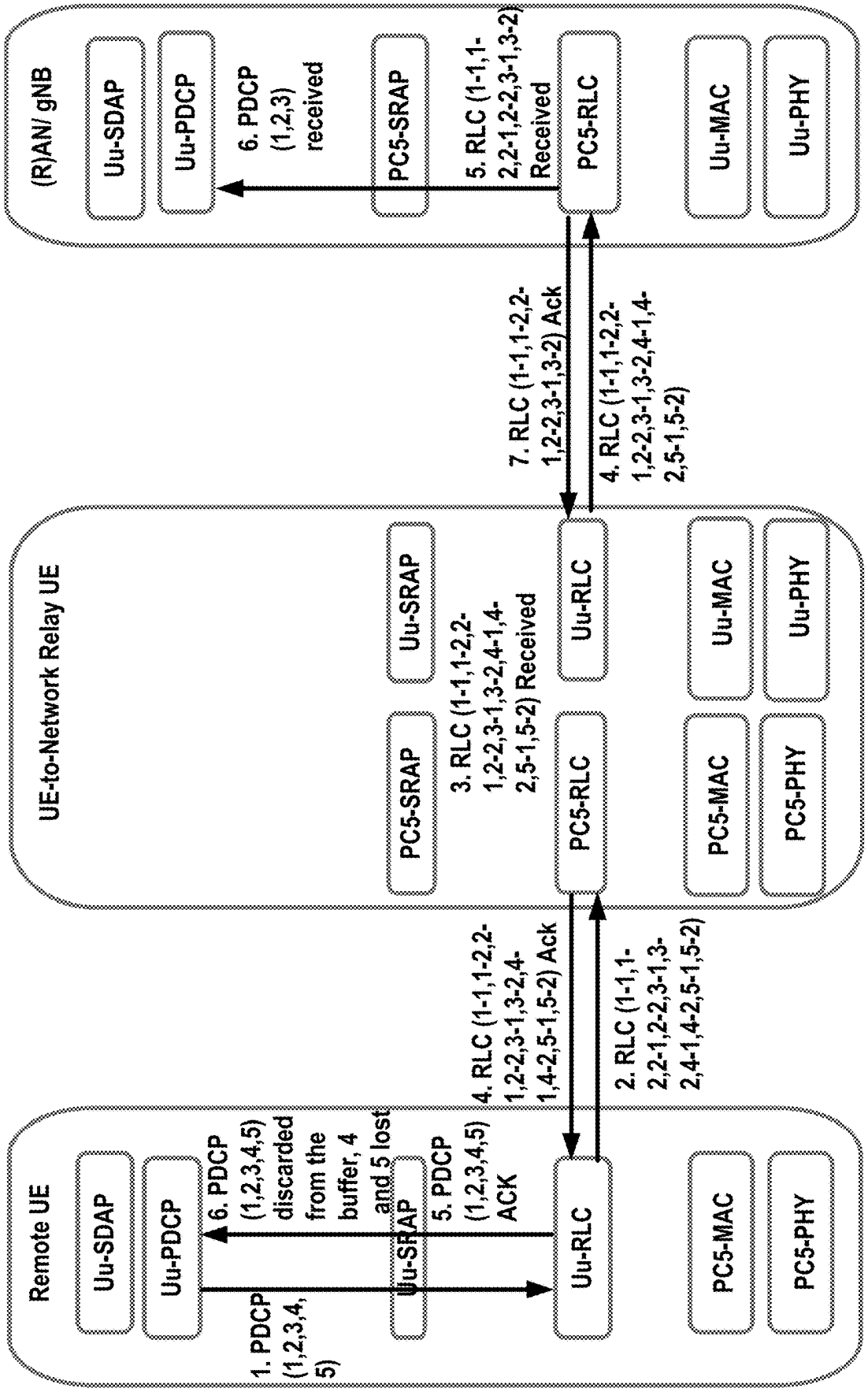
(R)AN/ gNB
Uu-SDAP
Uu-PDCP
6. PDCP (1,2,3) received
PC5-SRAP
5. RLC (1-1,1-2,2-1,2-2,3-1,3-2) Received
PC5-RLC
Uu-MAC
Uu-PHY
7. RLC (1-1,1-2,2-1,2-2,3-1,3-2) Ack
4. RLC (1-1,1-2,2-1,2-2,3-1,3-2,4-1,4-2,5-1,5-2)
UE-to-Network Relay UE
Uu-SRAP
PC5-SRAP
3. RLC (1-1,1-2,2-1,2-2,3-1,3-2,4-1,4-2,5-1,5-2) Received
Uu-RLC
PC5-RLC
Uu-MAC
Uu-PHY
PC5-MAC
PC5-PHY
4. RLC (1-1,1-2,2-1,2-2,3-1,3-2,4-1,4-2,5-1,5-2) Ack
2. RLC (1-1,1-2,2-2,1-2,2-3-1,3-2,4-1,4-2,5-1,5-2)
Remote UE
Uu-SDAP
Uu-PDCP
6. PDCP (1,2,3,4,5) discarded from the buffer, 4 and 5 lost
Uu-SRAP
5. PDCP (1,2,3,4,5) ACK
Uu-RLC
PC5-MAC
PC5-PHY
1. PDCP (1,2,3,4,5)

FIG. 31

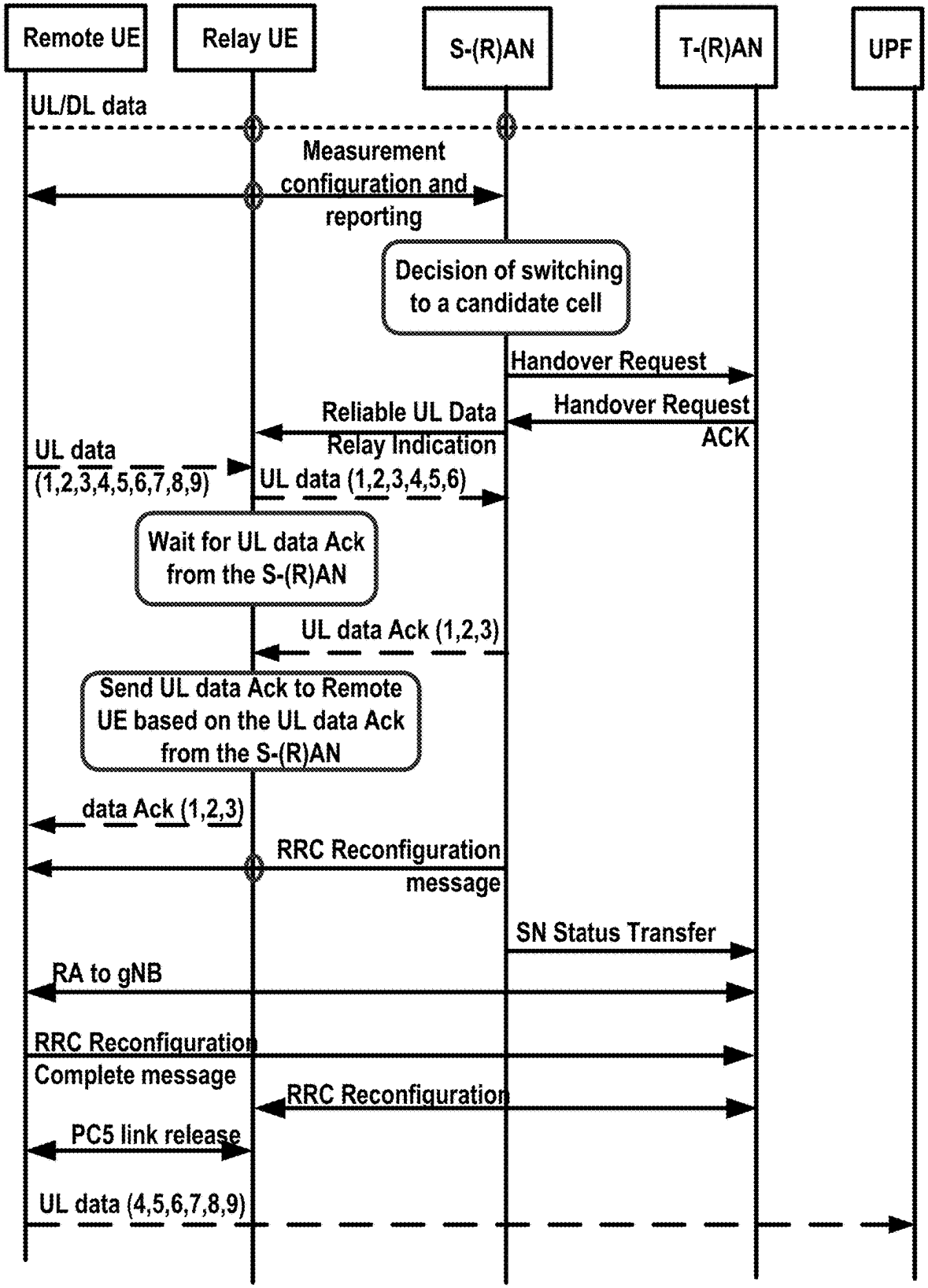
Remote UE
Relay UE
S-(R)AN
T-(R)AN
UPF
UL/DL data
Measurement configuration and reporting
Decision of switching to a candidate cell
Handover Request
Handover Request ACK
Reliable UL Data Relay Indication
UL data (1,2,3,4,5,6,7,8,9)
UL data (1,2,3,4,5,6)
Wait for UL data Ack from the S-(R)AN
UL data Ack (1,2,3)
Send UL data Ack to Remote UE based on the UL data Ack from the S-(R)AN
data Ack (1,2,3)
RRC Reconfiguration message
SN Status Transfer
RA to gNB
RRC Reconfiguration Complete message
RRC Reconfiguration
PC5 link release
UL data (4,5,6,7,8,9)

FIG. 32

RRCReconfiguration Message

```
-- ASN1START
-- TAG-RRCRECONFIGURATION-START
RRCReconfiguration ::=          SEQUENCE {
  rrc-TransactionIdentifier       RRC-TransactionIdentifier,
  criticalExtensions              CHOICE {
    rrcReconfiguration              RRCReconfiguration-IEs,
    criticalExtensionsFuture        SEQUENCE {}
  }}
RRCReconfiguration-IEs ::=      SEQUENCE {
  radioBearerConfig               RadioBearerConfig                                   OPTIONAL, -- Need M
  secondaryCellGroup              OCTET STRING (CONTAINING CellGroupConfig)           OPTIONAL, -- Cond SCG
  measConfig                      MeasConfig                                          OPTIONAL, -- Need M
  lateNonCriticalExtension        OCTET STRING                                        OPTIONAL,
 }
RRCReconfiguration-v1530-IEs ::=      SEQUENCE {
  masterCellGroup                 OCTET STRING (CONTAINING CellGroupConfig)           OPTIONAL, -- Need M
  fullConfig                      ENUMERATED {true}                                   OPTIONAL, -- Cond FullConfig
  dedicatedNAS-MessageList        SEQUENCE (SIZE(1..maxDRB)) OF DedicatedNAS-Message  OPTIONAL, -- Cond nonHO
  dedicatedSIB1-Delivery          OCTET STRING (CONTAINING SIB1)                      OPTIONAL, -- Need N
  dedicatedSystemInformationDelivery  OCTET STRING (CONTAINING SystemInformation)     OPTIONAL, -- Need N
 }
RRCReconfiguration-v1610-IEs ::=      SEQUENCE {
  iab-IP-AddressConfigurationList-r16   IAB-IP-AddressConfigurationList-r16           OPTIONAL, -- Need M
  daps-SourceRelease-r16          ENUMERATED{true}                                    OPTIONAL, -- Need N
  dedicatedPosSysInfoDelivery-r16     OCTET STRING (CONTAINING PosSystemInformation-r16-IEs)  OPTIONAL, -- Need N
  sl-ConfigDedicatedNR-r16        SetupRelease {SL-ConfigDedicatedNR-r16}             OPTIONAL, -- Need M
  sl-ConfigDedicatedEUTRA-Info-r16    SetupRelease {SL-ConfigDedicatedEUTRA-Info-r16} OPTIONAL, -- Need M
  targetCellSMTC-SCG-r16          SSB-MTC                                             OPTIONAL, -- Need S
 }
RRCReconfiguration-v1700-IEs ::=      SEQUENCE {
  sl-L2RelayUE-Config-r17         SetupRelease { SL-L2RelayUE-Config-r17 }            OPTIONAL, -- Need M
  sl-L2RemoteUE-Config-r17        SetupRelease { SL-L2RemoteUE-Config-r17 }           OPTIONAL, -- Need M
  dedicatedPagingDelivery-r17     OCTET STRING (CONTAINING Paging)                    OPTIONAL, -- Cond PagingRelay
  needForGapNCSG-ConfigNR-r17     SetupRelease {NeedForGapNCSG-ConfigNR-r17}          OPTIONAL, -- Need M
  needForGapNCSG-ConfigEUTRA-r17  SetupRelease {NeedForGapNCSG-ConfigEUTRA-r17}       OPTIONAL, -- Need M
RRCReconfiguration-v1610-IEs ::=      SEQUENCE {
sl-ReliableULDataRelayIndication  ENUMERATED {true}                                   OPTIONAL
}
-- TAG-RRCRECONFIGURATION-STOP
-- ASN1STOP
```

FIG. 33

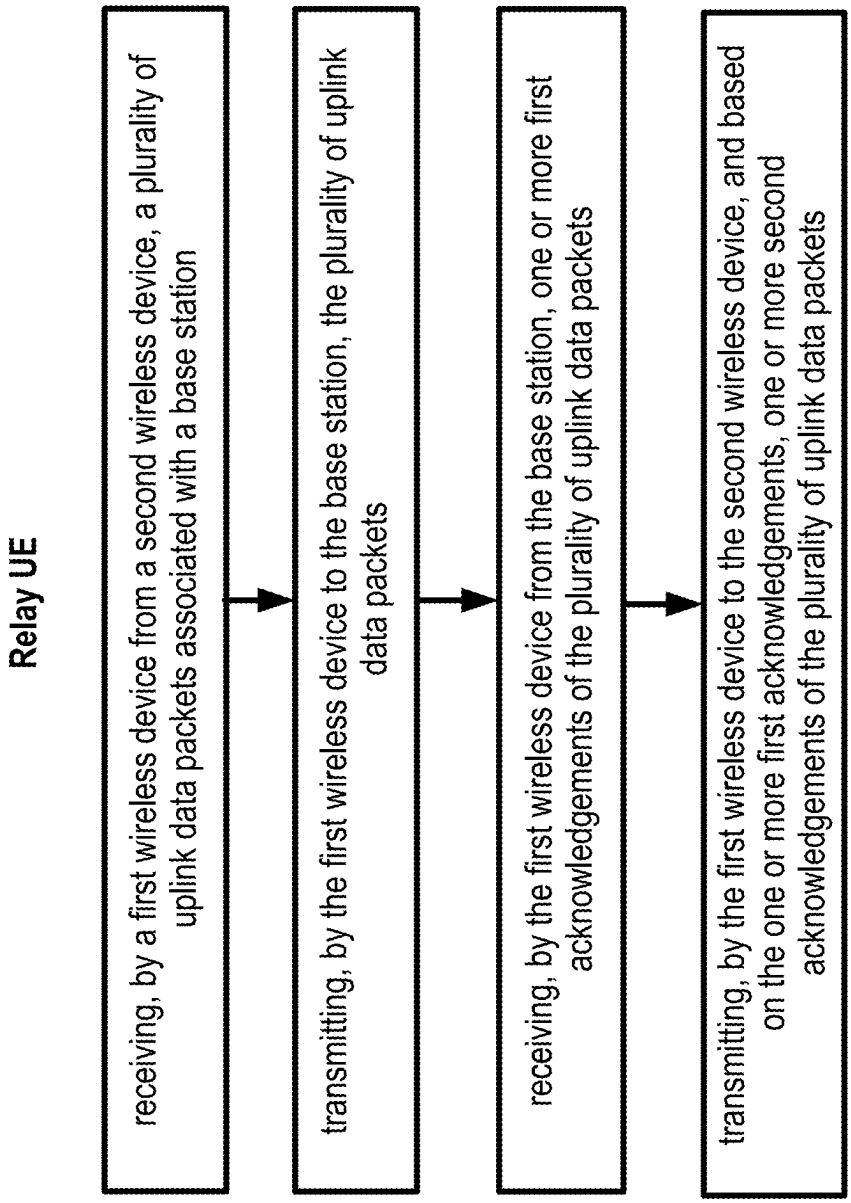
Relay UE
receiving, by a first wireless device from a second wireless device, a plurality of uplink data packets associated with a base station
transmitting, by the first wireless device to the base station, the plurality of uplink data packets
receiving, by the first wireless device from the base station, one or more first acknowledgements of the plurality of uplink data packets
transmitting, by the first wireless device to the second wireless device, and based on the one or more first acknowledgements, one or more second acknowledgements of the plurality of uplink data packets

FIG. 34

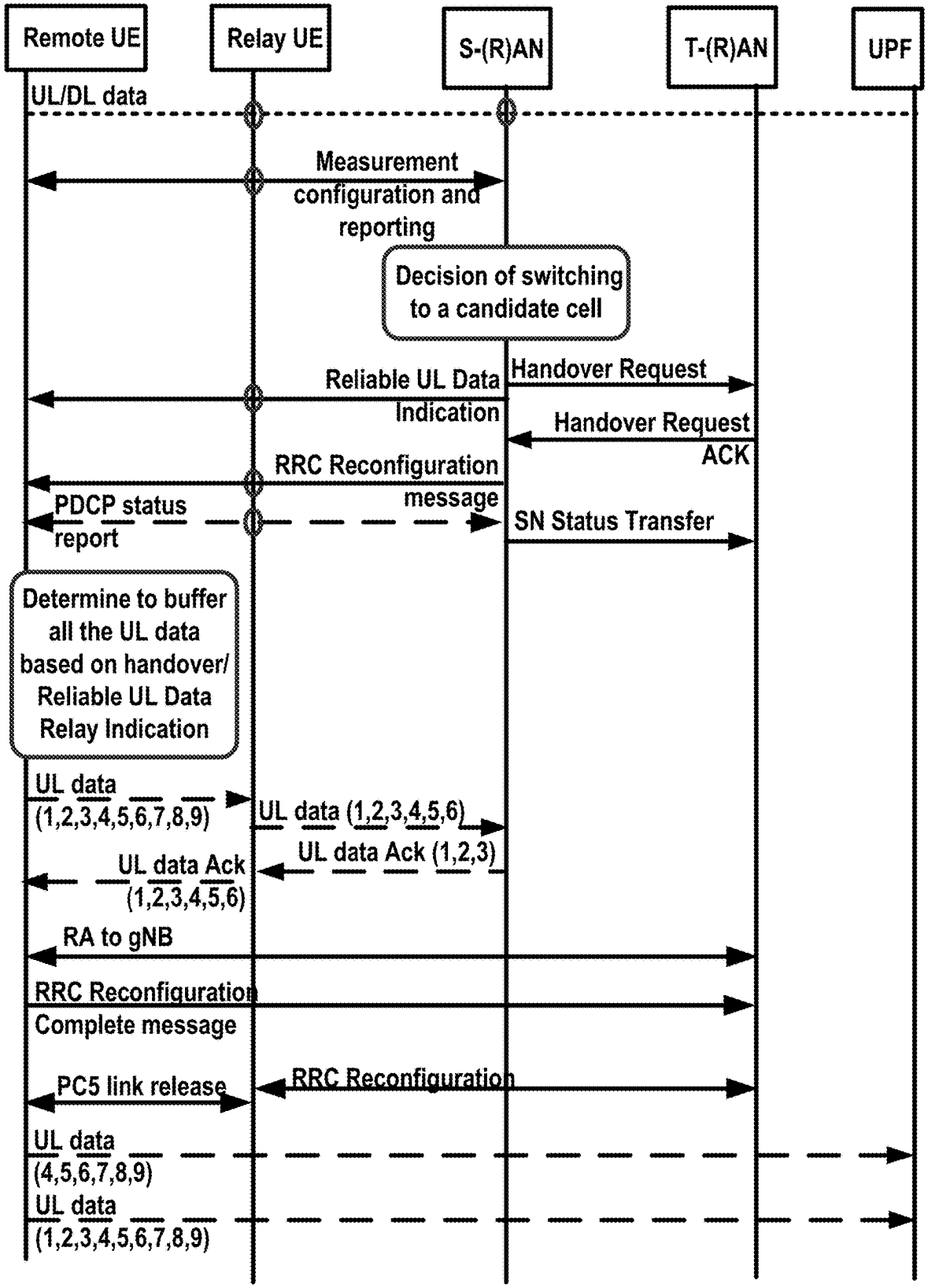
Remote UE
Relay UE
S-(R)AN
T-(R)AN
UPF
UL/DL data
Measurement configuration and reporting
Decision of switching to a candidate cell
Handover Request
Reliable UL Data Indication
Handover Request ACK
RRC Reconfiguration message
PDCP status report
SN Status Transfer
Determine to buffer all the UL data based on handover/ Reliable UL Data Relay Indication
UL data (1,2,3,4,5,6,7,8,9)
UL data (1,2,3,4,5,6)
UL data Ack (1,2,3)
UL data Ack (1,2,3,4,5,6)
RA to gNB
RRC Reconfiguration Complete message
PC5 link release
RRC Reconfiguration
UL data (4,5,6,7,8,9)
UL data (1,2,3,4,5,6,7,8,9)

FIG. 35

LOSSLESS PATH SWITCHING

CROSS-REFERENCE TO RELATED APPLICATIONS

[0001] This application is a continuation of International Application No. PCT/US2023/036615, filed Nov. 1, 2023, which claims the benefit of U.S. Provisional Application No. 63/421,286, filed Nov. 1, 2022, all of which are hereby incorporated by reference in their entireties.

BRIEF DESCRIPTION OF THE DRAWINGS

[0002] Examples of several of the various embodiments of the present disclosure are described herein with reference to the drawings.

[0003] FIGS. **1**A and **1**B illustrate example communication networks including an access network and a core network.

[0004] FIGS. **2**A, **2**B, **2**C, and **2**D illustrate various examples of a framework for a service-based architecture within a core network.

[0005] FIG. **3** illustrates an example communication network including core network functions.

[0006] FIGS. **4**A and **4**B illustrate example of core network architecture with multiple user plane functions and untrusted access.

[0007] FIG. **5** illustrates an example of a core network architecture for a roaming scenario.

[0008] FIG. **6** illustrates an example of network slicing.

[0009] FIGS. **7**A, **7**B, and **7**C illustrate a user plane protocol stack, a control plane protocol stack, and services provided between protocol layers of the user plane protocol stack.

[0010] FIG. **8** illustrates an example of a quality of service model for data exchange.

[0011] FIGS. **9**A, **9**B, **9**C, and **9**D illustrate example states and state transitions of a wireless device.

[0012] FIG. **10** illustrates an example of a registration procedure for a wireless device.

[0013] FIG. **11** illustrates an example of a service request procedure for a wireless device.

[0014] FIG. **12** illustrates an example of a protocol data unit (PDU) session establishment procedure for a wireless device.

[0015] FIG. **13** illustrates examples of components of the elements in a communications network.

[0016] FIGS. **14**A, **14**B, **14**C, and **14**D illustrate various examples of physical core network deployments, each having one or more network functions or portions thereof.

[0017] FIG. **15** illustrates an example of RRC connection establishment procedure for a wireless device.

[0018] FIG. **16** is a diagram illustrating an example NG-RAN Architecture supporting a PC5 interface.

[0019] FIG. **17** is an example diagram illustrating a Remote UE connects to a base station via a direct path and/or an indirect path.

[0020] FIG. **18** is an example diagram illustrating a user plane protocol stack for L2 UE-to-Network Relay.

[0021] FIG. **19** is an example diagram illustrating a control plane protocol stack for L2 UE-to-Network Relay.

[0022] FIG. **20** is an example diagram illustrating a Layer 2 data flow.

[0023] FIG. **21** is an example call flow illustrating a Remote UE establishes indirect paths with a (R)AN via Relay UE.

[0024] FIG. **22** is an example call flow illustrating a Remote UE establishes multiple paths with a base station.

[0025] FIG. **23** is an example diagram illustrating problems of existing technologies.

[0026] FIG. **24** is an example diagram illustrating problems of existing technologies.

[0027] FIG. **25** is an example call flow as per an aspect of an embodiment of the present disclosure.

[0028] FIG. **26** is an example diagram depicting a RRCReconfiguration message as per an aspect of an embodiment of the present disclosure.

[0029] FIG. **27** is an example diagram depicting the procedures of a wireless device as per an aspect of an embodiment of the present disclosure.

[0030] FIG. **28** is an example call flow as per an aspect of an embodiment of the present disclosure.

[0031] FIG. **29** is an example call flow as per an aspect of an embodiment of the present disclosure.

[0032] FIG. **30** is an example diagram illustrating problems of existing technologies.

[0033] FIG. **31** is an example diagram illustrating problems of existing technologies.

[0034] FIG. **32** is an example call flow as per an aspect of an embodiment of the present disclosure.

[0035] FIG. **33** is an example diagram depicting a RRCReconfiguration message as per an aspect of an embodiment of the present disclosure.

[0036] FIG. **34** is an example diagram depicting the procedures of a wireless device as per an aspect of an embodiment of the present disclosure.

[0037] FIG. **35** is an example call flow as per an aspect of an embodiment of the present disclosure.

DETAILED DESCRIPTION

[0038] In the present disclosure, various embodiments are presented as examples of how the disclosed techniques may be implemented and/or how the disclosed techniques may be practiced in environments and scenarios. It will be apparent to persons skilled in the relevant art that various changes in form and detail can be made therein without departing from the scope. In fact, after reading the description, it will be apparent to one skilled in the relevant art how to implement alternative embodiments. The present embodiments should not be limited by any of the described exemplary embodiments. The embodiments of the present disclosure will be described with reference to the accompanying drawings. Limitations, features, and/or elements from the disclosed example embodiments may be combined to create further embodiments within the scope of the disclosure. Any figures which highlight the functionality and advantages, are presented for example purposes only. The disclosed architecture is sufficiently flexible and configurable, such that it may be utilized in ways other than that shown. For example, the actions listed in any flowchart may be re-ordered or only optionally used in some embodiments.

[0039] Embodiments may be configured to operate as needed. The disclosed mechanism may be performed when certain criteria are met, for example, in a wireless device, a base station, a radio environment, a network, a combination of the above, and/or the like. Example criteria may be based, at least in part, on for example, wireless device or network

node configurations, traffic load, initial system set up, packet sizes, traffic characteristics, a combination of the above, and/or the like. When the one or more criteria are met, various example embodiments may be applied. Therefore, it may be possible to implement example embodiments that selectively implement disclosed protocols.

[0040] A base station may communicate with a mix of wireless devices. Wireless devices and/or base stations may support multiple technologies, and/or multiple releases of the same technology. Wireless devices may have one or more specific capabilities. When this disclosure refers to a base station communicating with a plurality of wireless devices, this disclosure may refer to a subset of the total wireless devices in a coverage area. This disclosure may refer to, for example, a plurality of wireless devices of a given LTE or 5G release with a given capability and in a given sector of the base station. The plurality of wireless devices in this disclosure may refer to a selected plurality of wireless devices, and/or a subset of total wireless devices in a coverage area which perform according to disclosed methods, and/or the like. There may be a plurality of base stations or a plurality of wireless devices in a coverage area that may not comply with the disclosed methods, for example, those wireless devices or base stations may perform based on older releases of LTE or 5G technology.

[0041] In this disclosure, "a" and "an" and similar phrases refer to a single instance of a particular element, but should not be interpreted to exclude other instances of that element. For example, a bicycle with two wheels may be described as having "a wheel". Any term that ends with the suffix "(s)" is to be interpreted as "at least one" and/or "one or more." In this disclosure, the term "may" is to be interpreted as "may, for example." In other words, the term "may" is indicative that the phrase following the term "may" is an example of one of a multitude of suitable possibilities that may, or may not, be employed by one or more of the various embodiments. The terms "comprises" and "consists of", as used herein, enumerate one or more components of the element being described. The term "comprises" is interchangeable with "includes" and does not exclude unenumerated components from being included in the element being described. By contrast, "consists of" provides a complete enumeration of the one or more components of the element being described.

[0042] The phrases "based on", "in response to", "depending on", "employing", "using", and similar phrases indicate the presence and/or influence of a particular factor and/or condition on an event and/or action, but do not exclude unenumerated factors and/or conditions from also being present and/or influencing the event and/or action. For example, if action X is performed "based on" condition Y, this is to be interpreted as the action being performed "based at least on" condition Y. For example, if the performance of action X is performed when conditions Y and Z are both satisfied, then the performing of action X may be described as being "based on Y".

[0043] The term "configured" may relate to the capacity of a device whether the device is in an operational or non-operational state. Configured may refer to specific settings in a device that effect the operational characteristics of the device whether the device is in an operational or non-operational state. In other words, the hardware, software, firmware, registers, memory values, and/or the like may be "configured" within a device, whether the device is in an operational or nonoperational state, to provide the device with specific characteristics. Terms such as "a control message to cause in a device" may mean that a control message has parameters that may be used to configure specific characteristics or may be used to implement certain actions in the device, whether the device is in an operational or non-operational state.

[0044] In this disclosure, a parameter may comprise one or more information objects, and an information object may comprise one or more other objects. For example, if parameter J comprises parameter K, and parameter K comprises parameter L, and parameter L comprises parameter M, then J comprises L, and J comprises M. A parameter may be referred to as a field or information element. In an example embodiment, when one or more messages comprise a plurality of parameters, it implies that a parameter in the plurality of parameters is in at least one of the one or more messages, but does not have to be in each of the one or more messages.

[0045] This disclosure may refer to possible combinations of enumerated elements. For the sake of brevity and legibility, the present disclosure does not explicitly recite each and every permutation that may be obtained by choosing from a set of optional features. The present disclosure is to be interpreted as explicitly disclosing all such permutations. For example, the seven possible combinations of enumerated elements A, B, C consist of: (1) "A"; (2) "B"; (3) "C"; (4) "A and B"; (5) "A and C"; (6) "B and C"; and (7) "A, B, and C". For the sake of brevity and legibility, these seven possible combinations may be described using any of the following interchangeable formulations: "at least one of A, B, and C"; "at least one of A, B, or C"; "one or more of A, B, and C"; "one or more of A, B, or C"; "A, B, and/or C". It will be understood that impossible combinations are excluded. For example, "X and/or not-X" should be interpreted as "X or not-X". It will be further understood that these formulations may describe alternative phrasings of overlapping and/or synonymous concepts, for example, "identifier, identification, and/or ID number".

[0046] This disclosure may refer to sets and/or subsets. As an example, set X may be a set of elements comprising one or more elements. If every element of X is also an element of Y, then X may be referred to as a subset of Y. In this disclosure, only non-empty sets and subsets are considered. For example, if Y consists of the elements Y1, Y2, and Y3, then the possible subsets of Y are {Y1, Y2, Y3}, {Y1, Y2}, {Y1, Y3}, {Y2, Y3}, {Y1}, {Y2}, and {Y3}.

[0047] FIG. **1**A illustrates an example of a communication network **100** in which embodiments of the present disclosure may be implemented. The communication network **100** may comprise, for example, a public land mobile network (PLMN) run by a network operator. As illustrated in FIG. **1**A, the communication network **100** includes a wireless device **101**, an access network (AN) **102**, a core network (CN) **105**, and one or more data network (DNs) **108**.

[0048] The wireless device **101** may communicate with DNs **108** via AN **102** and CN **105**. In the present disclosure, the term wireless device may refer to and encompass any mobile device or fixed (non-mobile) device for which wireless communication is needed or usable. For example, a wireless device may be a telephone, smart phone, tablet, computer, laptop, sensor, meter, wearable device, Internet of Things (IoT) device, vehicle road side unit (RSU), relay node, automobile, unmanned aerial vehicle, urban air mobil-

ity, and/or any combination thereof. The term wireless device encompasses other terms, including user equipment (UE), user terminal (UT), access terminal (AT), mobile station, handset, wireless transmit and receive unit (WTRU), and/or wireless communication device.

[0049] The AN **102** may connect wireless device **101** to CN **105** in any suitable manner. The communication direction from the AN **102** to the wireless device **101** is known as the downlink and the communication direction from the wireless device **101** to AN **102** is known as the uplink. Downlink transmissions may be separated from uplink transmissions using frequency division duplexing (FDD), time-division duplexing (TDD), and/or some combination of the two duplexing techniques. The AN **102** may connect to wireless device **101** through radio communications over an air interface. An access network that at least partially operates over the air interface may be referred to as a radio access network (RAN). The CN **105** may set up one or more end-to-end connection between wireless device **101** and the one or more DNs **108**. The CN **105** may authenticate wireless device **101** and provide charging functionality.

[0050] In the present disclosure, the term base station may refer to and encompass any element of AN **102** that facilitates communication between wireless device **101** and AN **102**. Access networks and base stations have many different names and implementations. The base station may be a terrestrial base station fixed to the earth. The base station may be a mobile base station with a moving coverage area. The base station may be in space, for example, on board a satellite. For example, WiFi and other standards may use the term access point. As another example, the Third-Generation Partnership Project (3GPP) has produced specifications for three generations of mobile networks, each of which uses different terminology. Third Generation (3G) and/or Universal Mobile Telecommunications System (UMTS) standards may use the term Node B. 4G, Long Term Evolution (LTE), and/or Evolved Universal Terrestrial Radio Access (E-UTRA) standards may use the term Evolved Node B (eNB). 5G and/or New Radio (NR) standards may describe AN **102** as a next-generation radio access network (NG-RAN) and may refer to base stations as Next Generation eNB (ng-eNB) and/or Generation Node B (gNB). Future standards (for example, 6G, 7G, 8G) may use new terminology to refer to the elements which implement the methods described in the present disclosure (e.g., wireless devices, base stations, ANs, CNs, and/or components thereof). A base station may be implemented as a repeater or relay node used to extend the coverage area of a donor node. A repeater node may amplify and rebroadcast a radio signal received from a donor node. A relay node may perform the same/similar functions as a repeater node but may decode the radio signal received from the donor node to remove noise before amplifying and rebroadcasting the radio signal.

[0051] The AN **102** may include one or more base stations, each having one or more coverage areas. The geographical size and/or extent of a coverage area may be defined in terms of a range at which a receiver of AN **102** can successfully receive transmissions from a transmitter (e.g., wireless device **101**) operating within the coverage area (and/or vice-versa). The coverage areas may be referred to as sectors or cells (although in some contexts, the term cell refers to the carrier frequency used in a particular coverage area, rather than the coverage area itself). Base stations with large coverage areas may be referred to as macrocell base stations. Other base stations cover smaller areas, for example, to provide coverage in areas with weak macrocell coverage, or to provide additional coverage in areas with high traffic (sometimes referred to as hotspots). Examples of small cell base stations include, in order of decreasing coverage area, microcell base stations, picocell base stations, and femtocell base stations or home base stations. Together, the coverage areas of the base stations may provide radio coverage to wireless device **101** over a wide geographic area to support wireless device mobility.

[0052] A base station may include one or more sets of antennas for communicating with the wireless device **101** over the air interface. Each set of antennas may be separately controlled by the base station. Each set of antennas may have a corresponding coverage area. As an example, a base station may include three sets of antennas to respectively control three coverage areas on three different sides of the base station. The entirety of the base station (and its corresponding antennas) may be deployed at a single location. Alternatively, a controller at a central location may control one or more sets of antennas at one or more distributed locations. The controller may be, for example, a baseband processing unit that is part of a centralized or cloud RAN architecture. The baseband processing unit may be either centralized in a pool of baseband processing units or virtualized. A set of antennas at a distributed location may be referred to as a remote radio head (RRH).

[0053] FIG. **1**B illustrates another example communication network **150** in which embodiments of the present disclosure may be implemented. The communication network **150** may comprise, for example, a PLMN run by a network operator. As illustrated in FIG. **1**B, communication network **150** includes UEs **151**, a next generation radio access network (NG-RAN) **152**, a 5G core network (5G-CN) **155**, and one or more DNs **158**. The NG-RAN **152** includes one or more base stations, illustrated as generation node Bs (gNBs) **152**A and next generation evolved Node Bs (ng eNBs) **152**B. The 5G-CN **155** includes one or more network functions (NFs), including control plane functions **155**A and user plane functions **155**B. The one or more DNs **158** may comprise public DNs (e.g., the Internet), private DNs, and/or intra-operator DNs. Relative to corresponding components illustrated in FIG. **1**A, these components may represent specific implementations and/or terminology.

[0054] The base stations of the NG-RAN **152** may be connected to the UEs **151** via Uu interfaces. The base stations of the NG-RAN **152** may be connected to each other via Xn interfaces. The base stations of the NG-RAN **152** may be connected to 5G CN **155** via NG interfaces. The Uu interface may include an air interface. The NG and Xn interfaces may include an air interface, or may consist of direct physical connections and/or indirect connections over an underlying transport network (e.g., an internet protocol (IP) transport network).

[0055] Each of the Uu, Xn, and NG interfaces may be associated with a protocol stack. The protocol stacks may include a user plane (UP) and a control plane (CP). Generally, user plane data may include data pertaining to users of the UEs **151**, for example, internet content downloaded via a web browser application, sensor data uploaded via a tracking application, or email data communicated to or from an email server. Control plane data, by contrast, may comprise signaling and messages that facilitate packaging and routing of user plane data so that it can be exchanged with

the DN(s). The NG interface, for example, may be divided into an NG user plane interface (NG-U) and an NG control plane interface (NG-C). The NG-U interface may provide delivery of user plane data between the base stations and the one or more user plane network functions **155**B. The NG-C interface may be used for control signaling between the base stations and the one or more control plane network functions **155**A. The NG-C interface may provide, for example, NG interface management, UE context management, UE mobility management, transport of NAS messages, paging, PDU session management, and configuration transfer and/or warning message transmission. In some cases, the NG-C interface may support transmission of user data (for example, a small data transmission for an IoT device).

[0056] One or more of the base stations of the NG-RAN **152** may be split into a central unit (CU) and one or more distributed units (DUs). A CU may be coupled to one or more DUs via an F1 interface. The CU may handle one or more upper layers in the protocol stack and the DU may handle one or more lower layers in the protocol stack. For example, the CU may handle RRC, PDCP, and SDAP, and the DU may handle RLC, MAC, and PHY. The one or more DUs may be in geographically diverse locations relative to the CU and/or each other. Accordingly, the CU/DU split architecture may permit increased coverage and/or better coordination.

[0057] The gNBs **152**A and ng-eNBs **152**B may provide different user plane and control plane protocol termination towards the UEs **151**. For example, the gNB **154**A may provide new radio (NR) protocol terminations over a Uu interface associated with a first protocol stack. The ng-eNBs **152**B may provide Evolved UMTS Terrestrial Radio Access (E-UTRA) protocol terminations over a Uu interface associated with a second protocol stack.

[0058] The 5G-CN **155** may authenticate UEs **151**, set up end-to-end connections between UEs **151** and the one or more DNs **158**, and provide charging functionality. The 5G-CN **155** may be based on a service-based architecture, in which the NFs making up the 5G-CN **155** offer services to each other and to other elements of the communication network **150** via interfaces. The 5G-CN **155** may include any number of other NFs and any number of instances of each NF.

[0059] FIGS. **2**A, **2**B, **2**C, and **2**D illustrate various examples of a framework for a service-based architecture within a core network. In a service-based architecture, a service may be sought by a service consumer and provided by a service producer. Prior to obtaining a particular service, an NF may determine where such as service can be obtained. To discover a service, the NF may communicate with a network repository function (NRF). As an example, an NF that provides one or more services may register with a network repository function (NRF). The NRF may store data relating to the one or more services that the NF is prepared to provide to other NFs in the service-based architecture. A consumer NF may query the NRF to discover a producer NF (for example, by obtaining from the NRF a list of NF instances that provide a particular service).

[0060] In the example of FIG. **2**A, an NF **211** (a consumer NF in this example) may send a request **221** to an NF **212** (a producer NF). The request **221** may be a request for a particular service and may be sent based on a discovery that NF **212** is a producer of that service. The request **221** may comprise data relating to NF **211** and/or the requested service. The NF **212** may receive request **221**, perform one or more actions associated with the requested service (e.g., retrieving data), and provide a response **221**. The one or more actions performed by the NF **212** may be based on request data included in the request **221**, data stored by NF **212**, and/or data retrieved by NF **212**. The response **222** may notify NF **211** that the one or more actions have been completed. The response **222** may comprise response data relating to NF **212**, the one or more actions, and/or the requested service.

[0061] In the example of FIG. **2**B, an NF **231** sends a request **241** to an NF **232**. In this example, part of the service produced by NF **232** is to send a request **242** to an NF **233**. The NF **233** may perform one or more actions and provide a response **243** to NF **232**. Based on response **243**, NF **232** may send a response **244** to NF **231**. It will be understood from FIG. **2**B that a single NF may perform the role of producer of services, consumer of services, or both. A particular NF service may include any number of nested NF services produced by one or more other NFs.

[0062] FIG. **2**C illustrates examples of subscribe-notify interactions between a consumer NF and a producer NF. In FIG. **2**C, an NF **251** sends a subscription **261** to an NF **252**. An NF **253** sends a subscription **262** to the NF **252**. Two NFs are shown in FIG. **2**C for illustrative purposes (to demonstrate that the NF **252** may provide multiple subscription services to different NFs), but it will be understood that a subscribe-notify interaction only requires one subscriber. The NFs **251**, **253** may be independent from one another. For example, the NFs **251**, **253** may independently discover NF **252** and/or independently determine to subscribe to the service offered by NF **252**. In response to receipt of a subscription, the NF **252** may provide a notification to the subscribing NF. For example, NF **252** may send a notification **263** to NF **251** based on subscription **261** and may send a notification **264** to NF **253** based on subscription **262**.

[0063] As shown in the example illustration of FIG. **2**C, the sending of the notifications **263**, **264** may be based on a determination that a condition has occurred. For example, the notifications **263**, **264** may be based on a determination that a particular event has occurred, a determination that a particular condition is outstanding, and/or a determination that a duration of time associated with the subscription has elapsed (for example, a period associated with a subscription for periodic notifications). As shown in the example illustration of FIG. **2**C, NF **252** may send notifications **263**, **264** to NFs **251**, **253** simultaneously and/or in response to the same condition. However, it will be understood that the NF **252** may provide notifications at different times and/or in response to different notification conditions. In an example, the NF **251** may request a notification when a certain parameter, as measured by the NF **252**, exceeds a first threshold, and the NF **252** may request a notification when the parameter exceeds a second threshold different from the first threshold. In an example, a parameter of interest and/or a corresponding threshold may be indicated in the subscriptions **261**, **262**.

[0064] FIG. **2**D illustrates another example of a subscribe-notify interaction. In FIG. **2**D, an NF **271** sends a subscription **281** to an NF **272**. In response to receipt of subscription **281** and/or a determination that a notification condition has occurred, NF **272** may send a notification **284**. The notification **284** may be sent to an NF **273**. Unlike the example in FIG. **2**C (in which a notification is sent to the subscribing

NF), FIG. **2**D demonstrates that a subscription and its corresponding notification may be associated with different NFs. For example, NF **271** may subscribe to the service provided by NF **272** on behalf of NF **273**.

[0065] FIG. **3** illustrates another example communication network **300** in which embodiments of the present disclosure may be implemented. Communication network **300** includes a user equipment (UE) **301**, an access network (AN) **302**, and a data network (DN) **308**. The remaining elements depicted in FIG. **3** may be included in and/or associated with a core network. Each element of the core network may be referred to as a network function (NF).

[0066] The NFs depicted in FIG. **3** include a user plane function (UPF) **305**, an access and mobility management function (AMF) **312**, a session management function (SMF) **314**, a policy control function (PCF) **320**, a network repository function (NRF) **330**, a network exposure function (NEF) **340**, a unified data management (UDM) **350**, an authentication server function (AUSF) **360**, a network slice selection function (NSSF) **370**, a charging function (CHF) **380**, a network data analytics function (NWDAF) **390**, and an application function (AF) **399**. The UPF **305** may be a user-plane core network function, whereas the NFs **312**, **314**, and **320**-**390** may be control-plane core network functions. Although not shown in the example of FIG. **3**, the core network may include additional instances of any of the NFs depicted and/or one or more different NF types that provide different services. Other examples of NF type include a gateway mobile location center (GMLC), a location management function (LMF), an operations, administration, and maintenance function (OAM), a public warning system (PWS), a short message service function (SMSF), a unified data repository (UDR), and an unstructured data storage function (UDSF).

[0067] Each element depicted in FIG. **3** has an interface with at least one other element. The interface may be a logical connection rather than, for example, a direct physical connection. Any interface may be identified using a reference point representation and/or a service-based representation. In a reference point representation, the letter 'N' is followed by a numeral, indicating an interface between two specific elements. For example, as shown in FIG. **3**, AN **302** and UPF **305** interface via 'N3', whereas UPF **305** and DN **308** interface via 'N6'. By contrast, in a service-based representation, the letter 'N' is followed by letters. The letters identify an NF that provides services to the core network. For example, PCF **320** may provide services via interface 'Npcf'. The PCF **320** may provide services to any NF in the core network via 'Npcf'. Accordingly, a service-based representation may correspond to a bundle of reference point representations. For example, the Npcf interface between PCF **320** and the core network generally may correspond to an N7 interface between PCF **320** and SMF **314**, an N30 interface between PCF **320** and NEF **340**, etc.

[0068] The UPF **305** may serve as a gateway for user plane traffic between AN **302** and DN **308**. The UE **301** may connect to UPF **305** via a Uu interface and an N3 interface (also described as NG-U interface). The UPF **305** may connect to DN **308** via an N6 interface. The UPF **305** may connect to one or more other UPFs (not shown) via an N9 interface. The UE **301** may be configured to receive services through a protocol data unit (PDU) session, which is a logical connection between UE **301** and DN **308**. The UPF **305** (or a plurality of UPFs if desired) may be selected by SMF **314** to handle a particular PDU session between UE **301** and DN **308**. The SMF **314** may control the functions of UPF **305** with respect to the PDU session. The SMF **314** may connect to UPF **305** via an N4 interface. The UPF **305** may handle any number of PDU sessions associated with any number of UEs (via any number of ANs). For purposes of handling the one or more PDU sessions, UPF **305** may be controlled by any number of SMFs via any number of corresponding N4 interfaces.

[0069] The AMF **312** depicted in FIG. **3** may control UE access to the core network. The UE **301** may register with the network via AMF **312**. It may be necessary for UE **301** to register prior to establishing a PDU session. The AMF **312** may manage a registration area of UE **301**, enabling the network to track the physical location of UE **301** within the network. For a UE in connected mode, AMF **312** may manage UE mobility, for example, handovers from one AN or portion thereof to another. For a UE in idle mode, AMF **312** may perform registration updates and/or page the UE to transition the UE to connected mode.

[0070] The AMF **312** may receive, from UE **301**, non-access stratum (NAS) messages transmitted in accordance with NAS protocol. NAS messages relate to communications between UE **301** and the core network. Although NAS messages may be relayed to AMF **312** via AN **302**, they may be described as communications via the N1 interface. NAS messages may facilitate UE registration and mobility management, for example, by authenticating, identifying, configuring, and/or managing a connection of UE **301**. NAS messages may support session management procedures for maintaining user plane connectivity and quality of service (QoS) of a session between UE **301** and DN **309**. If the NAS message involves session management, AMF **312** may send the NAS message to SMF **314**. NAS messages may be used to transport messages between UE **301** and other components of the core network (e.g., core network components other than AMF **312** and SMF **314**). The AMF **312** may act on a particular NAS message itself, or alternatively, forward the NAS message to an appropriate core network function (e.g., SMF **314**, etc.)

[0071] The SMF **314** depicted in FIG. **3** may establish, modify, and/or release a PDU session based on messaging received UE **301**. The SMF **314** may allocate, manage, and/or assign an IP address to UE **301**, for example, upon establishment of a PDU session. There may be multiple SMFs in the network, each of which may be associated with a respective group of wireless devices, base stations, and/or UPFs. A UE with multiple PDU sessions may be associated with a different SMF for each PDU session. As noted above, SMF **314** may select one or more UPFs to handle a PDU session and may control the handling of the PDU session by the selected UPF by providing rules for packet handling (PDR, FAR, QER, etc.). Rules relating to QoS and/or charging for a particular PDU session may be obtained from PCF **320** and provided to UPF **305**.

[0072] The PCF **320** may provide, to other NFs, services relating to policy rules. The PCF **320** may use subscription data and information about network conditions to determine policy rules and then provide the policy rules to a particular NF which may be responsible for enforcement of those rules. Policy rules may relate to policy control for access and mobility, and may be enforced by the AMF. Policy rules may relate to session management, and may be enforced by the

SMF **314**. Policy rules may be, for example, network-specific, wireless device-specific, session-specific, or data flow-specific.

[0073] The NRF **330** may provide service discovery. The NRF **330** may belong to a particular PLMN. The NRF **330** may maintain NF profiles relating to other NFs in the communication network **300**. The NF profile may include, for example, an address, PLMN, and/or type of the NF, a slice identifier, a list of the one or more services provided by the NF, and the authorization required to access the services.

[0074] The NEF **340** depicted in FIG. **3** may provide an interface to external domains, permitting external domains to selectively access the control plane of the communication network **300**. The external domain may comprise, for example, third-party network functions, application functions, etc. The NEF **340** may act as a proxy between external elements and network functions such as AMF **312**, SMF **314**, PCF **320**, UDM **350**, etc. As an example, NEF **340** may determine a location or reachability status of UE **301** based on reports from AMF **312**, and provide status information to an external element. As an example, an external element may provide, via NEF **340**, information that facilitates the setting of parameters for establishment of a PDU session. The NEF **340** may determine which data and capabilities of the control plane are exposed to the external domain. The NEF **340** may provide secure exposure that authenticates and/or authorizes an external entity to which data or capabilities of the communication network **300** are exposed. The NEF **340** may selectively control the exposure such that the internal architecture of the core network is hidden from the external domain.

[0075] The UDM **350** may provide data storage for other NFs. The UDM **350** may permit a consolidated view of network information that may be used to ensure that the most relevant information can be made available to different NFs from a single resource. The UDM **350** may store and/or retrieve information from a unified data repository (UDR). For example, UDM **350** may obtain user subscription data relating to UE **301** from the UDR.

[0076] The AUSF **360** may support mutual authentication of UE **301** by the core network and authentication of the core network by UE **301**. The AUSF **360** may perform key agreement procedures and provide keying material that can be used to improve security.

[0077] The NSSF **370** may select one or more network slices to be used by the UE **301**. The NSSF **370** may select a slice based on slice selection information. For example, the NSSF **370** may receive Single Network Slice Selection Assistance Information (S-NSSAI) and map the S-NSSAI to a network slice instance identifier (NSI).

[0078] The CHF **380** may control billing-related tasks associated with UE **301**. For example, UPF **305** may report traffic usage associated with UE **301** to SMF **314**. The SMF **314** may collect usage data from UPF **305** and one or more other UPFs. The usage data may indicate how much data is exchanged, what DN the data is exchanged with, a network slice associated with the data, or any other information that may influence billing. The SMF **314** may share the collected usage data with the CHF. The CHF may use the collected usage data to perform billing-related tasks associated with UE **301**. The CHF may, depending on the billing status of UE **301**, instruct SMF **314** to limit or influence access of UE **301** and/or to provide billing-related notifications to UE **301**.

[0079] The NWDAF **390** may collect and analyze data from other network functions and offer data analysis services to other network functions. As an example, NWDAF **390** may collect data relating to a load level for a particular network slice instance from UPF **305**, AMF **312**, and/or SMF **314**. Based on the collected data, NWDAF **390** may provide load level data to the PCF **320** and/or NSSF **370**, and/or notify the PC **220** and/or NSSF **370** if load level for a slice reaches and/or exceeds a load level threshold.

[0080] The AF **399** may be outside the core network, but may interact with the core network to provide information relating to the QoS requirements or traffic routing preferences associated with a particular application. The AF **399** may access the core network based on the exposure constraints imposed by the NEF **340**. However, an operator of the core network may consider the AF **399** to be a trusted domain that can access the network directly.

[0081] FIGS. **4**A, **4**B, and **5** illustrate other examples of core network architectures that are analogous in some respects to the core network architecture **300** depicted in FIG. **3**. For conciseness, some of the core network elements depicted in FIG. **3** are omitted. Many of the elements depicted in FIGS. **4**A, **4**B, and **5** are analogous in some respects to elements depicted in FIG. **3**. For conciseness, some of the details relating to their functions or operation are omitted.

[0082] FIG. **4**A illustrates an example of a core network architecture **400**A comprising an arrangement of multiple UPFs. Core network architecture **400**A includes a UE **401**, an AN **402**, an AMF **412**, and an SMF **414**. Unlike previous examples of core network architectures described above, FIG. **4**A depicts multiple UPFs, including a UPF **405**, a UPF **406**, and a UPF **407**, and multiple DNs, including a DN **408** and a DN **409**. Each of the multiple UPFs **405**, **406**, **407** may communicate with the SMF **414** via an N4 interface. The DNs **408**, **409** communicate with the UPFs **405**, **406**, respectively, via N6 interfaces. As shown in FIG. **4**A, the multiple UPFs **405**, **406**, **407** may communicate with one another via N9 interfaces.

[0083] The UPFs **405**, **406**, **407** may perform traffic detection, in which the UPFs identify and/or classify packets. Packet identification may be performed based on packet detection rules (PDR) provided by the SMF **414**. A PDR may include packet detection information comprising one or more of: a source interface, a UE IP address, core network (CN) tunnel information (e.g., a CN address of an N3/N9 tunnel corresponding to a PDU session), a network instance identifier, a quality of service flow identifier (QFI), a filter set (for example, an IP packet filter set or an ethernet packet filter set), and/or an application identifier.

[0084] In addition to indicating how a particular packet is to be detected, a PDR may further indicate rules for handling the packet upon detection thereof. The rules may include, for example, forwarding action rules (FARs), multi-access rules (MARs), usage reporting rules (URRs), QoS enforcement rules (QERs), etc. For example, the PDR may comprise one or more FAR identifiers, MAR identifiers, URR identifiers, and/or QER identifiers. These identifiers may indicate the rules that are prescribed for the handling of a particular detected packet.

[0085] The UPF **405** may perform traffic forwarding in accordance with a FAR. For example, the FAR may indicate that a packet associated with a particular PDR is to be forwarded, duplicated, dropped, and/or buffered. The FAR

may indicate a destination interface, for example, "access" for downlink or "core" for uplink. If a packet is to be buffered, the FAR may indicate a buffering action rule (BAR). As an example, UPF **405** may perform data buffering of a certain number downlink packets if a PDU session is deactivated.

[0086] The UPF **405** may perform QoS enforcement in accordance with a QER. For example, the QER may indicate a guaranteed bitrate that is authorized and/or a maximum bitrate to be enforced for a packet associated with a particular PDR. The QER may indicate that a particular guaranteed and/or maximum bitrate may be for uplink packets and/or downlink packets. The UPF **405** may mark packets belonging to a particular QoS flow with a corresponding QFI. The marking may enable a recipient of the packet to determine a QoS of the packet.

[0087] The UPF **405** may provide usage reports to the SMF **414** in accordance with a URR. The URR may indicate one or more triggering conditions for generation and reporting of the usage report, for example, immediate reporting, periodic reporting, a threshold for incoming uplink traffic, or any other suitable triggering condition. The URR may indicate a method for measuring usage of network resources, for example, data volume, duration, and/or event.

[0088] As noted above, the DNs **408**, **409** may comprise public DNs (e.g., the Internet), private DNs (e.g., private, internal corporate-owned DNs), and/or intra-operator DNs. Each DN may provide an operator service and/or a third-party service. The service provided by a DN may be the Internet, an IP multimedia subsystem (IMS), an augmented or virtual reality network, an edge computing or mobile edge computing (MEC) network, etc. Each DN may be identified using a data network name (DNN). The UE **401** may be configured to establish a first logical connection with DN **408** (a first PDU session), a second logical connection with DN **409** (a second PDU session), or both simultaneously (first and second PDU sessions).

[0089] Each PDU session may be associated with at least one UPF configured to operate as a PDU session anchor (PSA, or "anchor"). The anchor may be a UPF that provides an N6 interface with a DN.

[0090] In the example of FIG. **4**A, UPF **405** may be the anchor for the first PDU session between UE **401** and DN **408**, whereas the UPF **406** may be the anchor for the second PDU session between UE **401** and DN **409**. The core network may use the anchor to provide service continuity of a particular PDU session (for example, IP address continuity) as UE **401** moves from one access network to another. For example, suppose that UE **401** establishes a PDU session using a data path to the DN **408** using an access network other than AN **402**. The data path may include UPF **405** acting as anchor. Suppose further that the UE **401** later moves into the coverage area of the AN **402**. In such a scenario, SMF **414** may select a new UPF (UPF **407**) to bridge the gap between the newly-entered access network (AN **402**) and the anchor UPF (UPF **405**). The continuity of the PDU session may be preserved as any number of UPFs are added or removed from the data path. When a UPF is added to a data path, as shown in FIG. **4**A, it may be described as an intermediate UPF and/or a cascaded UPF.

[0091] As noted above, UPF **406** may be the anchor for the second PDU session between UE **401** and DN **409**.

[0092] Although the anchor for the first and second PDU sessions are associated with different UPFs in FIG. **4**A, it will be understood that this is merely an example. It will also be understood that multiple PDU sessions with a single DN may correspond to any number of anchors. When there are multiple UPFs, a UPF at the branching point (UPF **407** in FIG. **4**) may operate as an uplink classifier (UL-CL). The UL-CL may divert uplink user plane traffic to different UPFs.

[0093] The SMF **414** may allocate, manage, and/or assign an IP address to UE **401**, for example, upon establishment of a PDU session. The SMF **414** may maintain an internal pool of IP addresses to be assigned. The SMF **414** may, if necessary, assign an IP address provided by a dynamic host configuration protocol (DHCP) server or an authentication, authorization, and accounting (AAA) server. IP address management may be performed in accordance with a session and service continuity (SSC) mode. In SSC mode **1**, an IP address of UE **401** may be maintained (and the same anchor UPF may be used) as the wireless device moves within the network. In SSC mode **2**, the IP address of UE **401** changes as UE **401** moves within the network (e.g., the old IP address and UPF may be abandoned and a new IP address and anchor UPF may be established). In SSC mode **3**, it may be possible to maintain an old IP address (similar to SSC mode **1**) temporarily while establishing a new IP address (similar to SSC mode **2**), thus combining features of SSC modes **1** and **2**. Applications that are sensitive to IP address changes may operate in accordance with SSC mode **1**.

[0094] UPF selection may be controlled by SMF **414**. For example, upon establishment and/or modification of a PDU session between UE **401** and DN **408**, SMF **414** may select UPF **405** as the anchor for the PDU session and/or UPF **407** as an intermediate UPF. Criteria for UPF selection include path efficiency and/or speed between AN **402** and DN **408**. The reliability, load status, location, slice support and/or other capabilities of candidate UPFs may also be considered.

[0095] FIG. **4**B illustrates an example of a core network architecture **400**B that accommodates untrusted access. Similar to FIG. **4**A, UE **401** as depicted in FIG. **4**B connects to DN **408** via AN **402** and UPF **405**. The AN **402** and UPF **405** constitute trusted (e.g., 3GPP) access to the DN **408**. By contrast, UE **401** may also access DN **408** using an untrusted access network, AN **403**, and a non-3GPP interworking function (N3IWF) **404**.

[0096] The AN **403** may be, for example, a wireless land area network (WLAN) operating in accordance with the IEEE 802.11 standard. The UE **401** may connect to AN **403**, via an interface Y1, in whatever manner is prescribed for AN **403**. The connection to AN **403** may or may not involve authentication. The UE **401** may obtain an IP address from AN **403**. The UE **401** may determine to connect to core network **400**B and select untrusted access for that purpose. The AN **403** may communicate with N3IWF **404** via a Y2 interface. After selecting untrusted access, the UE **401** may provide N3IWF **404** with sufficient information to select an AMF. The selected AMF may be, for example, the same AMF that is used by UE **401** for 3GPP access (AMF **412** in the present example). The N3IWF **404** may communicate with AMF **412** via an N2 interface. The UPF **405** may be selected and N3IWF **404** may communicate with UPF **405** via an N3 interface. The UPF **405** may be a PDU session anchor (PSA) and may remain the anchor for the PDU session even as UE **401** shifts between trusted access and untrusted access.

[0097] FIG. **5** illustrates an example of a core network architecture **500** in which a UE **501** is in a roaming scenario. In a roaming scenario, UE **501** is a subscriber of a first PLMN (a home PLMN, or HPLMN) but attaches to a second PLMN (a visited PLMN, or VPLMN). Core network architecture **500** includes UE **501**, an AN **502**, a UPF **505**, and a DN **508**. The AN **502** and UPF **505** may be associated with a VPLMN. The VPLMN may manage the AN **502** and UPF **505** using core network elements associated with the VPLMN, including an AMF **512**, an SMF **514**, a PCF **520**, an NRF **530**, an NEF **540**, and an NSSF **570**. An AF **599** may be adjacent the core network of the VPLMN.

[0098] The UE **501** may not be a subscriber of the VPLMN. The AMF **512** may authorize UE **501** to access the network based on, for example, roaming restrictions that apply to UE **501**. In order to obtain network services provided by the VPLMN, it may be necessary for the core network of the VPLMN to interact with core network elements of a HPLMN of UE **501**, in particular, a PCF **521**, an NRF **531**, an NEF **541**, a UDM **551**, and/or an AUSF **561**. The VPLMN and HPLMN may communicate using an N32 interface connecting respective security edge protection proxies (SEPPs). In FIG. **5**, the respective SEPPs are depicted as a VSEPP **590** and an HSEPP **591**.

[0099] The VSEPP **590** and the HSEPP **591** communicate via an N32 interface for defined purposes while concealing information about each PLMN from the other. The SEPPs may apply roaming policies based on communications via the N32 interface. The PCF **520** and PCF **521** may communicate via the SEPPs to exchange policy-related signaling. The NRF **530** and NRF **531** may communicate via the SEPPs to enable service discovery of NFs in the respective PLMNs. The VPLMN and HPLMN may independently maintain NEF **540** and NEF **541**. The NSSF **570** and NSSF **571** may communicate via the SEPPs to coordinate slice selection for UE **501**. The HPLMN may handle all authentication and subscription related signaling. For example, when the UE **501** registers or requests service via the VPLMN, the VPLMN may authenticate UE **501** and/or obtain subscription data of UE **501** by accessing, via the SEPPs, the UDM **551** and AUSF **561** of the HPLMN.

[0100] The core network architecture **500** depicted in FIG. **5** may be referred to as a local breakout configuration, in which UE **501** accesses DN **508** using one or more UPFs of the VPLMN (i.e., UPF **505**). However, other configurations are possible. For example, in a home-routed configuration (not shown in FIG. **5**), UE **501** may access a DN using one or more UPFs of the HPLMN. In the home-routed configuration, an N9 interface may run parallel to the N32 interface, crossing the frontier between the VPLMN and the HPLMN to carry user plane data. One or more SMFs of the respective PLMNs may communicate via the N32 interface to coordinate session management for UE **501**. The SMFs may control their respective UPFs on either side of the frontier.

[0101] FIG. **6** illustrates an example of network slicing. Network slicing may refer to division of shared infrastructure (e.g., physical infrastructure) into distinct logical networks. These distinct logical networks may be independently controlled, isolated from one another, and/or associated with dedicated resources.

[0102] Network architecture **600**A illustrates an un-sliced physical network corresponding to a single logical network. The network architecture **600**A comprises a user plane wherein UEs **601**A, **601**B, **601**C (collectively, UEs **601**) have a physical and logical connection to a DN **608** via an AN **602** and a UPF **605**. The network architecture **600**A comprises a control plane wherein an AMF **612** and a SMF **614** control various aspects of the user plane.

[0103] The network architecture **600**A may have a specific set of characteristics (e.g., relating to maximum bit rate, reliability, latency, bandwidth usage, power consumption, etc.). This set of characteristics may be affected by the nature of the network elements themselves (e.g., processing power, availability of free memory, proximity to other network elements, etc.) or the management thereof (e.g., optimized to maximize bit rate or reliability, reduce latency or power bandwidth usage, etc.). The characteristics of network architecture **600**A may change over time, for example, by upgrading equipment or by modifying procedures to target a particular characteristic. However, at any given time, network architecture **600**A will have a single set of characteristics that may or may not be optimized for a particular use case. For example, UEs **601**A, **601**B, **601**C may have different requirements, but network architecture **600**A can only be optimized for one of the three.

[0104] Network architecture **600**B is an example of a sliced physical network divided into multiple logical networks. In FIG. **6**, the physical network is divided into three logical networks, referred to as slice A, slice B, and slice C. For example, UE **601**A may be served by AN **602**A, UPF **605**A, AMF **612**, and SMF **614**A. UE **601**B may be served by AN **602**B, UPF **605**B, AMF **612**, and SMF **614**B. UE **601**C may be served by AN **602**C, UPF **605**C, AMF **612**, and SMF **614**C. Although the respective UEs **601** communicate with different network elements from a logical perspective, these network elements may be deployed by a network operator using the same physical network elements.

[0105] Each network slice may be tailored to network services having different sets of characteristics. For example, slice A may correspond to enhanced mobile broadband (eMBB) service. Mobile broadband may refer to internet access by mobile users, commonly associated with smartphones. Slice B may correspond to ultra-reliable low-latency communication (URLLC), which focuses on reliability and speed. Relative to eMBB, URLLC may improve the feasibility of use cases such as autonomous driving and telesurgery. Slice C may correspond to massive machine type communication (mMTC), which focuses on low-power services delivered to a large number of users. For example, slice C may be optimized for a dense network of battery-powered sensors that provide small amounts of data at regular intervals. Many mMTC use cases would be prohibitively expensive if they operated using an eMBB or URLLC network.

[0106] If the service requirements for one of the UEs **601** changes, then the network slice serving that UE can be updated to provide better service. Moreover, the set of network characteristics corresponding to eMBB, URLLC, and mMTC may be varied, such that differentiated species of eMBB, URLLC, and mMTC are provided. Alternatively, network operators may provide entirely new services in response to, for example, customer demand.

[0107] In FIG. **6**, each of the UEs **601** has its own network slice. However, it will be understood that a single slice may serve any number of UEs and a single UE may operate using any number of slices. Moreover, in the example network architecture **600**B, the AN **602**, UPF **605** and SMF **614** are separated into three separate slices, whereas the AMF **612** is

unsliced. However, it will be understood that a network operator may deploy any architecture that selectively utilizes any mix of sliced and unsliced network elements, with different network elements divided into different numbers of slices. Although FIG. **6** only depicts three core network functions, it will be understood that other core network functions may be sliced as well. A PLMN that supports multiple network slices may maintain a separate network repository function (NFR) for each slice, enabling other NFs to discover network services associated with that slice.

[0108] Network slice selection may be controlled by an AMF, or alternatively, by a separate network slice selection function (NSSF). For example, a network operator may define and implement distinct network slice instances (NSIs). Each NSI may be associated with single network slice selection assistance information (S-NSSAI). The S-NSSAI may include a particular slice/service type (SST) indicator (indicating eMBB, URLLC, mMTC, etc.). as an example, a particular tracking area may be associated with one or more configured S-NSSAIs. UEs may identify one or more requested and/or subscribed S-NSSAIs (e.g., during registration). The network may indicate to the UE one or more allowed and/or rejected S-NSSAIs.

[0109] The S-NSSAI may further include a slice differentiator (SD) to distinguish between different tenants of a particular slice and/or service type. For example, a tenant may be a customer (e.g., vehicle manufacture, service provider, etc.) of a network operator that obtains (for example, purchases) guaranteed network resources and/or specific policies for handling its subscribers. The network operator may configure different slices and/or slice types, and use the SD to determine which tenant is associated with a particular slice.

[0110] FIGS. **7**A, **7**B, and **7**C illustrate a user plane (UP) protocol stack, a control plane (CP) protocol stack, and services provided between protocol layers of the UP protocol stack.

[0111] The layers may be associated with an open system interconnection (OSI) model of computer networking functionality. In the OSI model, layer 1 may correspond to the bottom layer, with higher layers on top of the bottom layer. Layer 1 may correspond to a physical layer, which is concerned with the physical infrastructure used for transfer of signals (for example, cables, fiber optics, and/or radio frequency transceivers). In New Radio (NR), layer 1 may comprise a physical layer (PHY). Layer 2 may correspond to a data link layer. Layer 2 may be concerned with packaging of data (into, e.g., data frames) for transfer, between nodes of the network, using the physical infrastructure of layer 1. In NR, layer 2 may comprise a media access control layer (MAC), a radio link control layer (RLC), a packet data convergence layer (PDCP), and a service data application protocol layer (SDAP).

[0112] Layer 3 may correspond to a network layer. Layer 3 may be concerned with routing of the data which has been packaged in layer 2. Layer 3 may handle prioritization of data and traffic avoidance. In NR, layer 3 may comprise a radio resources control layer (RRC) and a non-access stratum layer (NAS). Layers 4 through 7 may correspond to a transport layer, a session layer, a presentation layer, and an application layer. The application layer interacts with an end user to provide data associated with an application. In an example, an end user implementing the application may generate data associated with the application and initiate sending of that information to a targeted data network (e.g., the Internet, an application server, etc.). Starting at the application layer, each layer in the OSI model may manipulate and/or repackage the information and deliver it to a lower layer. At the lowest layer, the manipulated and/or repackaged information may be exchanged via physical infrastructure (for example, electrically, optically, and/or electromagnetically). As it approaches the targeted data network, the information will be unpackaged and provided to higher and higher layers, until it once again reaches the application layer in a form that is usable by the targeted data network (e.g., the same form in which it was provided by the end user). To respond to the end user, the data network may perform this procedure in reverse.

[0113] FIG. **7**A illustrates a user plane protocol stack. The user plane protocol stack may be a new radio (NR) protocol stack for a Uu interface between a UE **701** and a gNB **702**. In layer 1 of the UP protocol stack, the UE **701** may implement PHY **731** and the gNB **702** may implement PHY **732**. In layer 2 of the UP protocol stack, the UE **701** may implement MAC **741**, RLC **751**, PDCP **761**, and SDAP **771**. The gNB **702** may implement MAC **742**, RLC **752**, PDCP **762**, and SDAP **772**.

[0114] FIG. **7**B illustrates a control plane protocol stack. The control plane protocol stack may be an NR protocol stack for the Uu interface between the UE **701** and the gNB **702** and/or an N1 interface between the UE **701** and an AMF **712**. In layer 1 of the CP protocol stack, the UE **701** may implement PHY **731** and the gNB **702** may implement PHY **732**. In layer 2 of the CP protocol stack, the UE **701** may implement MAC **741**, RLC **751**, PDCP **761**, RRC **781**, and NAS **791**. The gNB **702** may implement MAC **742**, RLC **752**, PDCP **762**, and RRC **782**. The AMF **712** may implement NAS **792**.

[0115] The NAS may be concerned with the non-access stratum, in particular, communication between the UE **701** and the core network (e.g., the AMF **712**). Lower layers may be concerned with the access stratum, for example, communication between the UE **701** and the gNB **702**. Messages sent between the UE **701** and the core network may be referred to as NAS messages. In an example, a NAS message may be relayed by the gNB **702**, but the content of the NAS message (e.g., information elements of the NAS message) may not be visible to the gNB **702**.

[0116] FIG. **7**C illustrates an example of services provided between protocol layers of the NR user plane protocol stack illustrated in FIG. **7**A. The UE **701** may receive services through a PDU session, which may be a logical connection between the UE **701** and a data network (DN). The UE **701** and the DN may exchange data packets associated with the PDU session. The PDU session may comprise one or more quality of service (QoS) flows. SDAP **771** and SDAP **772** may perform mapping and/or demapping between the one or more QoS flows of the PDU session and one or more radio bearers (e.g., data radio bearers). The mapping between the QoS flows and the data radio bearers may be determined in the SDAP **772** by the gNB **702**, and the UE **701** may be notified of the mapping (e.g., based on control signaling and/or reflective mapping). For reflective mapping, the SDAP **772** of the gNB **220** may mark downlink packets with a QoS flow indicator (QFI) and deliver the downlink packets to the UE **701**. The UE **701** may determine the mapping based on the QFI of the downlink packets.

[0117] PDCP **761** and PDCP **762** may perform header compression and/or decompression. Header compression may reduce the amount of data transmitted over the physical layer. The PDCP **761** and PDCP **762** may perform ciphering and/or deciphering. Ciphering may reduce unauthorized decoding of data transmitted over the physical layer (e.g., intercepted on an air interface), and protect data integrity (e.g., to ensure control messages originate from intended sources). The PDCP **761** and PDCP **762** may perform retransmissions of undelivered packets, in-sequence delivery and reordering of packets, duplication of packets, and/or identification and removal of duplicate packets. In a dual connectivity scenario, PDCP **761** and PDCP **762** may perform mapping between a split radio bearer and RLC channels.

[0118] RLC **751** and RLC **752** may perform segmentation, retransmission through Automatic Repeat Request (ARQ). The RLC **751** and RLC **752** may perform removal of duplicate data units received from MAC **741** and MAC **742**, respectively. The RLCs **213** and **223** may provide RLC channels as a service to PDCPs **214** and **224**, respectively.

[0119] MAC **741** and MAC **742** may perform multiplexing and/or demultiplexing of logical channels. MAC **741** and MAC **742** may map logical channels to transport channels. In an example, UE **701** may, in MAC **741**, multiplex data units of one or more logical channels into a transport block. The UE **701** may transmit the transport block to the gNB **702** using PHY **731**. The gNB **702** may receive the transport block using PHY **732** and demultiplex data units of the transport blocks back into logical channels. MAC **741** and MAC **742** may perform error correction through Hybrid Automatic Repeat Request (HARQ), logical channel prioritization, and/or padding.

[0120] PHY **731** and PHY **732** may perform mapping of transport channels to physical channels. PHY **731** and PHY **732** may perform digital and analog signal processing functions (e.g., coding/decoding and modulation/demodulation) for sending and receiving information (e.g., transmission via an air interface). PHY **731** and PHY **732** may perform multi-antenna mapping.

[0121] FIG. **8** illustrates an example of a quality of service (QoS) model for differentiated data exchange. In the QoS model of FIG. **8**, there are a UE **801**, a AN **802**, and a UPF **805**. The QoS model facilitates prioritization of certain packet or protocol data units (PDUs), also referred to as packets. For example, higher-priority packets may be exchanged faster and/or more reliably than lower-priority packets. The network may devote more resources to exchange of high-QoS packets.

[0122] In the example of FIG. **8**, a PDU session **810** is established between UE **801** and UPF **805**. The PDU session **810** may be a logical connection enabling the UE **801** to exchange data with a particular data network (for example, the Internet). The UE **801** may request establishment of the PDU session **810**. At the time that the PDU session **810** is established, the UE **801** may, for example, identify the targeted data network based on its data network name (DNN). The PDU session **810** may be managed, for example, by a session management function (SMF, not shown). In order to facilitate exchange of data associated with the PDU session **810**, between the UE **801** and the data network, the SMF may select the UPF **805** (and optionally, one or more other UPFs, not shown).

[0123] One or more applications associated with UE **801** may generate uplink packets **812**A-**812**E associated with the PDU session **810**. In order to work within the QoS model, UE **801** may apply QoS rules **814** to uplink packets **812**A-**812**E. The QoS rules **814** may be associated with PDU session **810** and may be determined and/or provided to the UE **801** when PDU session **810** is established and/or modified. Based on QoS rules **814**, UE **801** may classify uplink packets **812**A-**812**E, map each of the uplink packets **812**A-**812**E to a QoS flow, and/or mark uplink packets **812**A-**812**E with a QoS flow indicator (QFI). As a packet travels through the network, and potentially mixes with other packets from other UEs having potentially different priorities, the QFI indicates how the packet should be handled in accordance with the QoS model. In the present illustration, uplink packets **812**A, **812**B are mapped to QoS flow **816**A, uplink packet **812**C is mapped to QoS flow **816**B, and the remaining packets are mapped to QoS flow **816**C.

[0124] The QoS flows may be the finest granularity of QoS differentiation in a PDU session. In the figure, three QoS flows **816**A-**816**C are illustrated. However, it will be understood that there may be any number of QoS flows. Some QoS flows may be associated with a guaranteed bit rate (GBR QoS flows) and others may have bit rates that are not guaranteed (non-GBR QoS flows). QoS flows may also be subject to per-UE and per-session aggregate bit rates. One of the QoS flows may be a default QoS flow. The QoS flows may have different priorities. For example, QoS flow **816**A may have a higher priority than QoS flow **816**B, which may have a higher priority than QoS flow **816**C. Different priorities may be reflected by different QoS flow characteristics. For example, QoS flows may be associated with flow bit rates. A particular QoS flow may be associated with a guaranteed flow bit rate (GFBR) and/or a maximum flow bit rate (MFBR). QoS flows may be associated with specific packet delay budgets (PDBs), packet error rates (PERs), and/or maximum packet loss rates. QoS flows may also be subject to per-UE and per-session aggregate bit rates.

[0125] In order to work within the QoS model, UE **801** may apply resource mapping rules **818** to the QoS flows **816**A-**816**C. The air interface between UE **801** and AN **802** may be associated with resources **820**. In the present illustration, QoS flow **816**A is mapped to resource **820**A, whereas QoS flows **816**B, **816**C are mapped to resource **820**B. The resource mapping rules **818** may be provided by the AN **802**. In order to meet QoS requirements, the resource mapping rules **818** may designate more resources for relatively high-priority QoS flows. With more resources, a high-priority QoS flow such as QoS flow **816**A may be more likely to obtain the high flow bit rate, low packet delay budget, or other characteristic associated with QoS rules **814**. The resources **820** may comprise, for example, radio bearers. The radio bearers (e.g., data radio bearers) may be established between the UE **801** and the AN **802**. The radio bearers in 5G, between the UE **801** and the AN **802**, may be distinct from bearers in LTE, for example, Evolved Packet System (EPS) bearers between a UE and a packet data network gateway (PGW), **51** bearers between an eNB and a serving gateway (SGW), and/or an S5/S8 bearer between an SGW and a PGW.

[0126] Once a packet associated with a particular QoS flow is received at AN **802** via resource **820**A or resource **820**B, AN **802** may separate packets into respective QoS flows **856**A-**856**C based on QoS profiles **828**. The QoS

profiles **828** may be received from an SMF. Each QoS profile may correspond to a QFI, for example, the QFI marked on the uplink packets **812**A-**812**E. Each QoS profile may include QoS parameters such as 5G QoS identifier (5Q1) and an allocation and retention priority (ARP). The QoS profile for non-GBR QoS flows may further include additional QoS parameters such as a reflective QoS attribute (RQA). The QoS profile for GBR QoS flows may further include additional QoS parameters such as a guaranteed flow bit rate (GFBR), a maximum flow bit rate (MFBR), and/or a maximum packet loss rate. The 5Q1 may be a standardized 5Q1 which have one-to-one mapping to a standardized combination of 5G QoS characteristics per well-known services. The 5Q1 may be a dynamically assigned 5Q1 which the standardized 5Q1 values are not defined. The 5Q1 may represent 5G QoS characteristics. The 5Q1 may comprise a resource type, a default priority level, a packet delay budget (PDB), a packet error rate (PER), a maximum data burst volume, and/or an averaging window. The resource type may indicate a non-GBR QoS flow, a GBR QoS flow or a delay-critical GBR QoS flow. The averaging window may represent a duration over which the GFBR and/or MFBR is calculated. ARP may be a priority level comprising pre-emption capability and a pre-emption vulnerability. Based on the ARP, the AN **802** may apply admission control for the QoS flows in a case of resource limitations.

[0127] The AN **802** may select one or more N3 tunnels **850** for transmission of the QoS flows **856**A-**856**C. After the packets are divided into QoS flows **856**A-**856**C, the packet may be sent to UPF **805** (e.g., towards a DN) via the selected one or more N3 tunnels **850**. The UPF **805** may verify that the QFIs of the uplink packets **812**A-**812**E are aligned with the QoS rules **814** provided to the UE **801**. The UPF **805** may measure and/or count packets and/or provide packet metrics to, for example, a PCF.

[0128] The figure also illustrates a process for downlink. In particular, one or more applications may generate downlink packets **852**A-**852**E. The UPF **805** may receive downlink packets **852**A-**852**E from one or more DNs and/or one or more other UPFs. As per the QoS model, UPF **805** may apply packet detection rules (PDRs) **854** to downlink packets **852**A-**852**E. Based on PDRs **854**, UPF **805** may map packets **852**A-**852**E into QoS flows. In the present illustration, downlink packets **852**A, **852**B are mapped to QoS flow **856**A, downlink packet **852**C is mapped to QoS flow **856**B, and the remaining packets are mapped to QoS flow **856**C.

[0129] The QoS flows **856**A-**856**C may be sent to AN **802**. The AN **802** may apply resource mapping rules to the QoS flows **856**A-**856**C. In the present illustration, QoS flow **856**A is mapped to resource **820**A, whereas QoS flows **856**B, **856**C are mapped to resource **820**B. In order to meet QoS requirements, the resource mapping rules may designate more resources to high-priority QoS flows.

[0130] FIGS. **9**A-**9**D illustrate example states and state transitions of a wireless device (e.g., a UE). At any given time, the wireless device may have a radio resources control (RRC) state, a registration management (RM) state, and a connection management (CM) state.

[0131] FIG. **9**A is an example diagram showing RRC state transitions of a wireless device (e.g., a UE). The UE may be in one of three RRC states: RRC idle **910**, (e.g., RRC_IDLE), RRC inactive **920** (e.g., RRC_INACTIVE), or RRC connected **930** (e.g., RRC_CONNECTED). The UE may implement different RAN-related control-plane procedures depending on its RRC state. Other elements of the network, for example, a base station, may track the RRC state of one or more UEs and implement RAN-related control-plane procedures appropriate to the RRC state of each.

[0132] In RRC connected **930**, it may be possible for the UE to exchange data with the network (for example, the base station). The parameters necessary for exchange of data may be established and known to both the UE and the network. The parameters may be referred to and/or included in an RRC context of the UE (sometimes referred to as a UE context). These parameters may include, for example: one or more AS contexts; one or more radio link configuration parameters; bearer configuration information (e.g., relating to a data radio bearer, signaling radio bearer, logical channel, QoS flow, and/or PDU session); security information; and/or PHY, MAC, RLC, PDCP, and/or SDAP layer configuration information. The base station with which the UE is connected may store the RRC context of the UE.

[0133] While in RRC connected **930**, mobility of the UE may be managed by the access network, whereas the UE itself may manage mobility while in RRC idle **910** and/or RRC inactive **920**. While in RRC connected **930**, the UE may manage mobility by measuring signal levels (e.g., reference signal levels) from a serving cell and neighboring cells and reporting these measurements to the base station currently serving the UE. The network may initiate handover based on the reported measurements. The RRC state may transition from RRC connected **930** to RRC idle **910** through a connection release procedure **930** or to RRC inactive **920** through a connection inactivation procedure **932**.

[0134] In RRC idle **910**, an RRC context may not be established for the UE. In RRC idle **910**, the UE may not have an RRC connection with a base station. While in RRC idle **910**, the UE may be in a sleep state for a majority of the time (e.g., to conserve battery power). The UE may wake up periodically (e.g., once in every discontinuous reception cycle) to monitor for paging messages from the access network. Mobility of the UE may be managed by the UE through a procedure known as cell reselection. The RRC state may transition from RRC idle **910** to RRC connected **930** through a connection establishment procedure **913**, which may involve a random access procedure, as discussed in greater detail below.

[0135] In RRC inactive **920**, the RRC context previously established is maintained in the UE and the base station. This may allow for a fast transition to RRC connected **930** with reduced signaling overhead as compared to the transition from RRC idle **910** to RRC connected **930**. The RRC state may transition to RRC connected **930** through a connection resume procedure **923**. The RRC state may transition to RRC idle **910** though a connection release procedure **921** that may be the same as or similar to connection release procedure **931**.

[0136] An RRC state may be associated with a mobility management mechanism. In RRC idle **910** and RRC inactive **920**, mobility may be managed by the UE through cell reselection. The purpose of mobility management in RRC idle **910** and/or RRC inactive **920** is to allow the network to be able to notify the UE of an event via a paging message without having to broadcast the paging message over the entire mobile communications network. The mobility management mechanism used in RRC idle **910** and/or RRC inactive **920** may allow the network to track the UE on a cell-group level so that the paging message may be broad-

cast over the cells of the cell group that the UE currently resides within instead of the entire communication network. Tracking may be based on different granularities of grouping. For example, there may be three levels of cell-grouping granularity: individual cells; cells within a RAN area identified by a RAN area identifier (RAI); and cells within a group of RAN areas, referred to as a tracking area and identified by a tracking area identifier (TAI).

[0137] Tracking areas may be used to track the UE at the CN level. The CN may provide the UE with a list of TAIs associated with a UE registration area. If the UE moves, through cell reselection, to a cell associated with a TAI not included in the list of TAIs associated with the UE registration area, the UE may perform a registration update with the CN to allow the CN to update the UE's location and provide the UE with a new the UE registration area.

[0138] RAN areas may be used to track the UE at the RAN level. For a UE in RRC inactive **920** state, the UE may be assigned a RAN notification area. A RAN notification area may comprise one or more cell identities, a list of RAIs, and/or a list of TAIs. In an example, a base station may belong to one or more RAN notification areas. In an example, a cell may belong to one or more RAN notification areas. If the UE moves, through cell reselection, to a cell not included in the RAN notification area assigned to the UE, the UE may perform a notification area update with the RAN to update the UE's RAN notification area.

[0139] A base station storing an RRC context for a UE or a last serving base station of the UE may be referred to as an anchor base station. An anchor base station may maintain an RRC context for the UE at least during a period of time that the UE stays in a RAN notification area of the anchor base station and/or during a period of time that the UE stays in RRC inactive **920**.

[0140] FIG. **9**B is an example diagram showing registration management (RM) state transitions of a wireless device (e.g., a UE). The states are RM deregistered **940**, (e.g., RM-DEREGISTERED) and RM registered **950** (e.g., RM-REGISTERED).

[0141] In RM deregistered **940**, the UE is not registered with the network, and the UE is not reachable by the network. In order to be reachable by the network, the UE must perform an initial registration. As an example, the UE may register with an AMF of the network. If registration is rejected (registration reject **944**), then the UE remains in RM deregistered **940**. If registration is accepted (registration accept **945**), then the UE transitions to RM registered **950**. While the UE is RM registered **950**, the network may store, keep, and/or maintain a UE context for the UE. The UE context may be referred to as wireless device context. The UE context corresponding to network registration (maintained by the core network) may be different from the RRC context corresponding to RRC state (maintained by an access network, e.g., a base station). The UE context may comprise a UE identifier and a record of various information relating to the UE, for example, UE capability information, policy information for access and mobility management of the UE, lists of allowed or established slices or PDU sessions, and/or a registration area of the UE (i.e., a list of tracking areas covering the geographical area where the wireless device is likely to be found).

[0142] While the UE is RM registered **950**, the network may store the UE context of the UE, and if necessary use the UE context to reach the UE. Moreover, some services may not be provided by the network unless the UE is registered. The UE may update its UE context while remaining in RM registered **950** (registration update accept **955**). For example, if the UE leaves one tracking area and enters another tracking area, the UE may provide a tracking area identifier to the network. The network may deregister the UE, or the UE may deregister itself (deregistration **954**). For example, the network may automatically deregister the wireless device if the wireless device is inactive for a certain amount of time. Upon deregistration, the UE may transition to RM deregistered **940**.

[0143] FIG. **9**C is an example diagram showing connection management (CM) state transitions of a wireless device (e.g., a UE), shown from a perspective of the wireless device. The UE may be in CM idle **960** (e.g., CM-IDLE) or CM connected **970** (e.g., CM-CONNECTED).

[0144] In CM idle **960**, the UE does not have a non access stratum (NAS) signaling connection with the network. As a result, the UE can not communicate with core network functions. The UE may transition to CM connected **970** by establishing an AN signaling connection (AN signaling connection establishment **967**). This transition may be initiated by sending an initial NAS message. The initial NAS message may be a registration request (e.g., if the UE is RM deregistered **940**) or a service request (e.g., if the UE is RM registered **950**). If the UE is RM registered **950**, then the UE may initiate the AN signaling connection establishment by sending a service request, or the network may send a page, thereby triggering the UE to send the service request.

[0145] In CM connected **970**, the UE can communicate with core network functions using NAS signaling. As an example, the UE may exchange NAS signaling with an AMF for registration management purposes, service request procedures, and/or authentication procedures. As another example, the UE may exchange NAS signaling, with an SMF, to establish and/or modify a PDU session. The network may disconnect the UE, or the UE may disconnect itself (AN signaling connection release **976**). For example, if the UE transitions to RM deregistered **940**, then the UE may also transition to CM idle **960**. When the UE transitions to CM idle **960**, the network may deactivate a user plane connection of a PDU session of the UE.

[0146] FIG. **9**D is an example diagram showing CM state transitions of the wireless device (e.g., a UE), shown from a network perspective (e.g., an AMF). The CM state of the UE, as tracked by the AMF, may be in CM idle **980** (e.g., CM-IDLE) or CM connected **990** (e.g., CM-CONNECTED). When the UE transitions from CM idle **980** to CM connected **990**, the AMF many establish an N2 context of the UE (N2 context establishment **989**). When the UE transitions from CM connected **990** to CM idle **980**, the AMF many release the N2 context of the UE (N2 context release **998**).

[0147] FIGS. **10-12** illustrate example procedures for registering, service request, and PDU session establishment of a UE.

[0148] FIG. **10** illustrates an example of a registration procedure for a wireless device (e.g., a UE). Based on the registration procedure, the UE may transition from, for example, RM deregistered **940** to RM registered **950**.

[0149] Registration may be initiated by a UE for the purposes of obtaining authorization to receive services, enabling mobility tracking, enabling reachability, or other purposes. The UE may perform an initial registration as a

first step toward connection to the network (for example, if the UE is powered on, airplane mode is turned off, etc.). Registration may also be performed periodically to keep the network informed of the UE's presence (for example, while in CM-IDLE state), or in response to a change in UE capability or registration area. Deregistration (not shown in FIG. **10**) may be performed to stop network access.

[0150] At **1010**, the UE transmits a registration request to an AN. As an example, the UE may have moved from a coverage area of a previous AMF (illustrated as AMF #1) into a coverage area of a new AMF (illustrated as AMF #2). The registration request may be a NAS message. The registration request may include a UE identifier. The AN may select an AMF for registration of the UE. For example, the AN may select a default AMF. For example, the AN may select an AMF that is already mapped to the UE (e.g., a previous AMF). The NAS registration request may include a network slice identifier and the AN may select an AMF based on the requested slice. After the AMF is selected, the AN may send the registration request to the selected AMF.

[0151] At **1020**, the AMF that receives the registration request (AMF #2) performs a context transfer. The context may be a UE context, for example, an RRC context for the UE. As an example, AMF #2 may send AMF #1 a message requesting a context of the UE. The message may include the UE identifier. The message may be a Namf_Communication_UEContextTransfer message. AMF #1 may send to AMF #2 a message that includes the requested UE context. This message may be a Namf_Communication_UEContextTransfer message. After the UE context is received, the AMF #2 may coordinate authentication of the UE. After authentication is complete, AMF #2 may send to AMF #1 a message indicating that the UE context transfer is complete. This message may be a Namf_Communication_UEContextTransfer Response message.

[0152] Authentication may require participation of the UE, an AUSF, a UDM and/or a UDR (not shown). For example, the AMF may request that the AUSF authenticate the UE. For example, the AUSF may execute authentication of the UE. For example, the AUSF may get authentication data from UDM. For example, the AUSF may send a subscription permanent identifier (SUPI) to the AMF based on the authentication being successful. For example, the AUSF may provide an intermediate key to the AMF. The intermediate key may be used to derive an access-specific security key for the UE, enabling the AMF to perform security context management (SCM). The AUSF may obtain subscription data from the UDM. The subscription data may be based on information obtained from the UDM (and/or the UDR). The subscription data may include subscription identifiers, security credentials, access and mobility related subscription data and/or session related data.

[0153] At **1030**, the new AMF, AMF #2, registers and/or subscribes with the UDM. AMF #2 may perform registration using a UE context management service of the UDM (Nudm_UECM). AMF #2 may obtain subscription information of the UE using a subscriber data management service of the UDM (Nudm_SDM). AMF #2 may further request that the UDM notify AMF #2 if the subscription information of the UE changes. As the new AMF registers and subscribes, the old AMF, AMF #1, may deregister and unsubscribe. After deregistration, AMF #1 is free of responsibility for mobility management of the UE.

[0154] At **1040**, AMF #2 retrieves access and mobility (AM) policies from the PCF. As an example, the AMF #2 may provide subscription data of the UE to the PCF. The PCF may determine access and mobility policies for the UE based on the subscription data, network operator data, current network conditions, and/or other suitable information. For example, the owner of a first UE may purchase a higher level of service than the owner of a second UE. The PCF may provide the rules associated with the different levels of service. Based on the subscription data of the respective UEs, the network may apply different policies which facilitate different levels of service.

[0155] For example, access and mobility policies may relate to service area restrictions, RAT/frequency selection priority (RFSP, where RAT stands for radio access technology), authorization and prioritization of access type (e.g., LTE versus NR), and/or selection of non-3GPP access (e.g., Access Network Discovery and Selection Policy (ANDSP)). The service area restrictions may comprise a list of tracking areas where the UE is allowed to be served (or forbidden from being served). The access and mobility policies may include a UE route selection policy (URSP)) that influences routing to an established PDU session or a new PDU session. As noted above, different policies may be obtained and/or enforced based on subscription data of the UE, location of the UE (i.e., location of the AN and/or AMF), or other suitable factors.

[0156] At **1050**, AMF #2 may update a context of a PDU session. For example, if the UE has an existing PDU session, the AMF #2 may coordinate with an SMF to activate a user plane connection associated with the existing PDU session. The SMF may update and/or release a session management context of the PDU session (Nsmf_PDUSession_UpdateSMContext, Nsmf_PDUSession_ReleaseSMContext).

[0157] At **1060**, AMF #2 sends a registration accept message to the AN, which forwards the registration accept message to the UE. The registration accept message may include a new UE identifier and/or a new configured slice identifier. The UE may transmit a registration complete message to the AN, which forwards the registration complete message to the AMF #2. The registration complete message may acknowledge receipt of the new UE identifier and/or new configured slice identifier.

[0158] At **1070**, AMF #2 may obtain UE policy control information from the PCF. The PCF may provide an access network discovery and selection policy (ANDSP) to facilitate non-3GPP access. The PCF may provide a UE route selection policy (URSP) to facilitate mapping of particular data traffic to particular PDU session connectivity parameters. As an example, the URSP may indicate that data traffic associated with a particular application should be mapped to a particular SSC mode, network slice, PDU session type, or preferred access type (3GPP or non-3GPP).

[0159] FIG. **11** illustrates an example of a service request procedure for a wireless device (e.g., a UE). The service request procedure depicted in FIG. **11** is a network-triggered service request procedure for a UE in a CM-IDLE state. However, other service request procedures (e.g., a UE-triggered service request procedure) may also be understood by reference to FIG. **11**, as will be discussed in greater detail below.

[0160] At **1110**, a UPF receives data. The data may be downlink data for transmission to a UE. The data may be associated with an existing PDU session between the UE

and a DN. The data may be received, for example, from a DN and/or another UPF. The UPF may buffer the received data. In response to the receiving of the data, the UPF may notify an SMF of the received data. The identity of the SMF to be notified may be determined based on the received data. The notification may be, for example, an N4 session report. The notification may indicate that the UPF has received data associated with the UE and/or a particular PDU session associated with the UE. In response to receiving the notification, the SMF may send PDU session information to an AMF. The PDU session information may be sent in an N1N2 message transfer for forwarding to an AN. The PDU session information may include, for example, UPF tunnel endpoint information and/or QoS information.

[0161] At **1120**, the AMF determines that the UE is in a CM-IDLE state. The determining at **1120** may be in response to the receiving of the PDU session information. Based on the determination that the UE is CM-IDLE, the service request procedure may proceed to **1130** and **1140**, as depicted in FIG. **11**. However, if the UE is not CM-IDLE (e.g., the UE is CM-CONNECTED), then **1130** and **1140** may be skipped, and the service request procedure may proceed directly to **1150**.

[0162] At **1130**, the AMF pages the UE. The paging at **1130** may be performed based on the UE being CM-IDLE. To perform the paging, the AMF may send a page to the AN. The page may be referred to as a paging or a paging message. The page may be an N2 request message. The AN may be one of a plurality of ANs in a RAN notification area of the UE. The AN may send a page to the UE. The UE may be in a coverage area of the AN and may receive the page.

[0163] At **1140**, the UE may request service. The UE may transmit a service request to the AMF via the AN. As depicted in FIG. **11**, the UE may request service at **1140** in response to receiving the paging at **1130**. However, as noted above, this is for the specific case of a network-triggered service request procedure. In some scenarios (for example, if uplink data becomes available at the UE), then the UE may commence a UE-triggered service request procedure. The UE-triggered service request procedure may commence starting at **1140**.

[0164] At **1150**, the network may authenticate the UE. Authentication may require participation of the UE, an AUSF, and/or a UDM, for example, similar to authentication described elsewhere in the present disclosure. In some cases (for example, if the UE has recently been authenticated), the authentication at **1150** may be skipped.

[0165] At **1160**, the AMF and SMF may perform a PDU session update. As part of the PDU session update, the SMF may provide the AMF with one or more UPF tunnel endpoint identifiers. In some cases (not shown in FIG. **11**), it may be necessary for the SMF to coordinate with one or more other SMFs and/or one or more other UPFs to set up a user plane.

[0166] At **1170**, the AMF may send PDU session information to the AN. The PDU session information may be included in an N2 request message. Based on the PDU session information, the AN may configure a user plane resource for the UE. To configure the user plane resource, the AN may, for example, perform an RRC reconfiguration of the UE. The AN may acknowledge to the AMF that the PDU session information has been received. The AN may notify the AMF that the user plane resource has been configured, and/or provide information relating to the user plane resource configuration.

[0167] In the case of a UE-triggered service request procedure, the UE may receive, at **1170**, a NAS service accept message from the AMF via the AN. After the user plane resource is configured, the UE may transmit uplink data (for example, the uplink data that caused the UE to trigger the service request procedure).

[0168] At **1180**, the AMF may update a session management (SM) context of the PDU session. For example, the AMF may notify the SMF (and/or one or more other associated SMFs) that the user plane resource has been configured, and/or provide information relating to the user plane resource configuration. The AMF may provide the SMF (and/or one or more other associated SMFs) with one or more AN tunnel endpoint identifiers of the AN. After the SM context update is complete, the SMF may send an update SM context response message to the AMF.

[0169] Based on the update of the session management context, the SMF may update a PCF for purposes of policy control. For example, if a location of the UE has changed, the SMF may notify the PCF of the UE's a new location.

[0170] Based on the update of the session management context, the SMF and UPF may perform a session modification. The session modification may be performed using N4 session modification messages. After the session modification is complete, the UPF may transmit downlink data (for example, the downlink data that caused the UPF to trigger the network-triggered service request procedure) to the UE. The transmitting of the downlink data may be based on the one or more AN tunnel endpoint identifiers of the AN.

[0171] FIG. **12** illustrates an example of a protocol data unit (PDU) session establishment procedure for a wireless device (e.g., a UE). The UE may determine to transmit the PDU session establishment request to create a new PDU session, to hand over an existing PDU session to a 3GPP network, or for any other suitable reason.

[0172] At **1210**, the UE initiates PDU session establishment. The UE may transmit a PDU session establishment request to an AMF via an AN. The PDU session establishment request may be a NAS message. The PDU session establishment request may indicate: a PDU session ID; a requested PDU session type (new or existing); a requested DN (DNN); a requested network slice (S-NSSAI); a requested SSC mode; and/or any other suitable information. The PDU session ID may be generated by the UE. The PDU session type may be, for example, an Internet Protocol (IP)-based type (e.g., IPv4, IPv6, or dual stack IPv4/IPv6), an Ethernet type, or an unstructured type.

[0173] The AMF may select an SMF based on the PDU session establishment request. In some scenarios, the requested PDU session may already be associated with a particular SMF. For example, the AMF may store a UE context of the UE, and the UE context may indicate that the PDU session ID of the requested PDU session is already associated with the particular SMF. In some scenarios, the AMF may select the SMF based on a determination that the SMF is prepared to handle the requested PDU session. For example, the requested PDU session may be associated with a particular DNN and/or S-NSSAI, and the SMF may be selected based on a determination that the SMF can manage a PDU session associated with the particular DNN and/or S-NSSAI.

[0174] At **1220**, the network manages a context of the PDU session. After selecting the SMF at **1210**, the AMF sends a PDU session context request to the SMF. The PDU session context request may include the PDU session establishment request received from the UE at **1210**. The PDU session context request may be a Nsmf_PDUSession_CreateSMContext Request and/or a Nsmf_PDUSession_UpdateSMContext Request. The PDU session context request may indicate identifiers of the UE; the requested DN; and/or the requested network slice. Based on the PDU session context request, the SMF may retrieve subscription data from a UDM. The subscription data may be session management subscription data of the UE. The SMF may subscribe for updates to the subscription data, so that the PCF will send new information if the subscription data of the UE changes. After the subscription data of the UE is obtained, the SMF may transmit a PDU session context response to the AMG. The PDU session context response may be a Nsmf_PDUSession_CreateSMContext Response and/or a Nsmf_PDUSession_UpdateSMContext Response. The PDU session context response may include a session management context ID.

[0175] At **1230**, secondary authorization/authentication may be performed, if necessary. The secondary authorization/authentication may involve the UE, the AMF, the SMF, and the DN. The SMF may access the DN via a Data Network Authentication, Authorization and Accounting (DN AAA) server.

[0176] At **1240**, the network sets up a data path for uplink data associated with the PDU session. The SMF may select a PCF and establish a session management policy association. Based on the association, the PCF may provide an initial set of policy control and charging rules (PCC rules) for the PDU session. When targeting a particular PDU session, the PCF may indicate, to the SMF, a method for allocating an IP address to the PDU Session, a default charging method for the PDU session, an address of the corresponding charging entity, triggers for requesting new policies, etc. The PCF may also target a service data flow (SDF) comprising one or more PDU sessions. When targeting an SDF, the PCF may indicate, to the SMF, policies for applying QoS requirements, monitoring traffic (e.g., for charging purposes), and/or steering traffic (e.g., by using one or more particular N6 interfaces).

[0177] The SMF may determine and/or allocate an IP address for the PDU session. The SMF may select one or more UPFs (a single UPF in the example of FIG. **12**) to handle the PDU session. The SMF may send an N4 session message to the selected UPF. The N4 session message may be an N4 Session Establishment Request and/or an N4 Session Modification Request. The N4 session message may include packet detection, enforcement, and reporting rules associated with the PDU session. In response, the UPF may acknowledge by sending an N4 session establishment response and/or an N4 session modification response.

[0178] The SMF may send PDU session management information to the AMF. The PDU session management information may be a Namf_Communication_N1N2MessageTransfer message. The PDU session management information may include the PDU session ID. The PDU session management information may be a NAS message. The PDU session management information may include N1 session management information and/or N2 session management information. The N1 session management information may include a PDU session establishment accept message. The PDU session establishment accept message may include tunneling endpoint information of the UPF and quality of service (QoS) information associated with the PDU session.

[0179] The AMF may send an N2 request to the AN. The N2 request may include the PDU session establishment accept message. Based on the N2 request, the AN may determine AN resources for the UE. The AN resources may be used by the UE to establish the PDU session, via the AN, with the DN. The AN may determine resources to be used for the PDU session and indicate the determined resources to the UE. The AN may send the PDU session establishment accept message to the UE. For example, the AN may perform an RRC reconfiguration of the UE. After the AN resources are set up, the AN may send an N2 request acknowledge to the AMF. The N2 request acknowledge may include N2 session management information, for example, the PDU session ID and tunneling endpoint information of the AN.

[0180] After the data path for uplink data is set up at **1240**, the UE may optionally send uplink data associated with the PDU session. As shown in FIG. **12**, the uplink data may be sent to a DN associated with the PDU session via the AN and the UPF.

[0181] At **1250**, the network may update the PDU session context. The AMF may transmit a PDU session context update request to the SMF. The PDU session context update request may be a Nsmf_PDUSession_UpdateSMContext Request. The PDU session context update request may include the N2 session management information received from the AN. The SMF may acknowledge the PDU session context update. The acknowledgement may be a Nsmf_PDUSession_UpdateSMContext Response. The acknowledgement may include a subscription requesting that the SMF be notified of any UE mobility event. Based on the PDU session context update request, the SMF may send an N4 session message to the UPF. The N4 session message may be an N4 Session Modification Request. The N4 session message may include tunneling endpoint information of the AN. The N4 session message may include forwarding rules associated with the PDU session. In response, the UPF may acknowledge by sending an N4 session modification response.

[0182] After the UPF receives the tunneling endpoint information of the AN, the UPF may relay downlink data associated with the PDU session. As shown in FIG. **12**, the downlink data may be received from a DN associated with the PDU session via the AN and the UPF.

[0183] FIG. **13** illustrates examples of components of the elements in a communications network. FIG. **13** includes a wireless device **1310**, a base station **1320**, and a physical deployment of one or more network functions **1330** (henceforth "deployment **1330**"). Any wireless device described in the present disclosure may have similar components and may be implemented in a similar manner as the wireless device **1310**. Any other base station described in the present disclosure (or any portion thereof, depending on the architecture of the base station) may have similar components and may be implemented in a similar manner as the base station **1320**. Any physical core network deployment in the present disclosure (or any portion thereof, depending on the

architecture of the base station) may have similar components and may be implemented in a similar manner as the deployment **1330**.

[0184] The wireless device **1310** may communicate with base station **1320** over an air interface **1370**. The communication direction from wireless device **1310** to base station **1320** over air interface **1370** is known as uplink, and the communication direction from base station **1320** to wireless device **1310** over air interface **1370** is known as downlink. Downlink transmissions may be separated from uplink transmissions using FDD, TDD, and/or some combination of duplexing techniques. FIG. **13** shows a single wireless device **1310** and a single base station **1320**, but it will be understood that wireless device **1310** may communicate with any number of base stations or other access network components over air interface **1370**, and that base station **1320** may communicate with any number of wireless devices over air interface **1370**.

[0185] The wireless device **1310** may comprise a processing system **1311** and a memory **1312**. The memory **1312** may comprise one or more computer-readable media, for example, one or more non-transitory computer readable media. The memory **1312** may include instructions **1313**. The processing system **1311** may process and/or execute instructions **1313**. Processing and/or execution of instructions **1313** may cause wireless device **1310** and/or processing system **1311** to perform one or more functions or activities. The memory **1312** may include data (not shown). One of the functions or activities performed by processing system **1311** may be to store data in memory **1312** and/or retrieve previously-stored data from memory **1312**. In an example, downlink data received from base station **1320** may be stored in memory **1312**, and uplink data for transmission to base station **1320** may be retrieved from memory **1312**. As illustrated in FIG. **13**, the wireless device **1310** may communicate with base station **1320** using a transmission processing system **1314** and/or a reception processing system **1315**. Alternatively, transmission processing system **1314** and reception processing system **1315** may be implemented as a single processing system, or both may be omitted and all processing in the wireless device **1310** may be performed by the processing system **1311**. Although not shown in FIG. **13**, transmission processing system **1314** and/or reception processing system **1315** may be coupled to a dedicated memory that is analogous to but separate from memory **1312**, and comprises instructions that may be processed and/or executed to carry out one or more of their respective functionalities. The wireless device **1310** may comprise one or more antennas **1316** to access air interface **1370**.

[0186] The wireless device **1310** may comprise one or more other elements **1319**. The one or more other elements **1319** may comprise software and/or hardware that provide features and/or functionalities, for example, a speaker, a microphone, a keypad, a display, a touchpad, a satellite transceiver, a universal serial bus (USB) port, a hands-free headset, a frequency modulated (FM) radio unit, a media player, an Internet browser, an electronic control unit (e.g., for a motor vehicle), and/or one or more sensors (e.g., an accelerometer, a gyroscope, a temperature sensor, a radar sensor, a lidar sensor, an ultrasonic sensor, a light sensor, a camera, a global positioning sensor (GPS) and/or the like). The wireless device **1310** may receive user input data from and/or provide user output data to the one or more one or more other elements **1319**. The one or more other elements **1319** may comprise a power source. The wireless device **1310** may receive power from the power source and may be configured to distribute the power to the other components in wireless device **1310**. The power source may comprise one or more sources of power, for example, a battery, a solar cell, a fuel cell, or any combination thereof.

[0187] The wireless device **1310** may transmit uplink data to and/or receive downlink data from base station **1320** via air interface **1370**. To perform the transmission and/or reception, one or more of the processing system **1311**, transmission processing system **1314**, and/or reception system **1315** may implement open systems interconnection (OSI) functionality. As an example, transmission processing system **1314** and/or reception system **1315** may perform layer 1 OSI functionality, and processing system **1311** may perform higher layer functionality. The wireless device **1310** may transmit and/or receive data over air interface **1370** using one or more antennas **1316**. For scenarios where the one or more antennas **1316** include multiple antennas, the multiple antennas may be used to perform one or more multi-antenna techniques, such as spatial multiplexing (e.g., single-user multiple-input multiple output (MIMO) or multi-user MIMO), transmit/receive diversity, and/or beamforming.

[0188] The base station **1320** may comprise a processing system **1321** and a memory **1322**. The memory **1322** may comprise one or more computer-readable media, for example, one or more non-transitory computer readable media. The memory **1322** may include instructions **1323**. The processing system **1321** may process and/or execute instructions **1323**. Processing and/or execution of instructions **1323** may cause base station **1320** and/or processing system **1321** to perform one or more functions or activities. The memory **1322** may include data (not shown). One of the functions or activities performed by processing system **1321** may be to store data in memory **1322** and/or retrieve previously-stored data from memory **1322**. The base station **1320** may communicate with wireless device **1310** using a transmission processing system **1324** and a reception processing system **1325**. Although not shown in FIG. **13**, transmission processing system **1324** and/or reception processing system **1325** may be coupled to a dedicated memory that is analogous to but separate from memory **1322**, and comprises instructions that may be processed and/or executed to carry out one or more of their respective functionalities. The wireless device **1320** may comprise one or more antennas **1326** to access air interface **1370**.

[0189] The base station **1320** may transmit downlink data to and/or receive uplink data from wireless device **1310** via air interface **1370**. To perform the transmission and/or reception, one or more of the processing system **1321**, transmission processing system **1324**, and/or reception system **1325** may implement OSI functionality. As an example, transmission processing system **1324** and/or reception system **1325** may perform layer 1 OSI functionality, and processing system **1321** may perform higher layer functionality. The base station **1320** may transmit and/or receive data over air interface **1370** using one or more antennas **1326**. For scenarios where the one or more antennas **1326** include multiple antennas, the multiple antennas may be used to perform one or more multi-antenna techniques, such as spatial multiplexing (e.g., single-user multiple-input mul-

tiple output (MIMO) or multi-user MIMO), transmit/receive diversity, and/or beamforming.

[0190] The base station **1320** may comprise an interface system **1327**. The interface system **1327** may communicate with one or more base stations and/or one or more elements of the core network via an interface **1380**. The interface **1380** may be wired and/or wireless and interface system **1327** may include one or more components suitable for communicating via interface **1380**. In FIG. **13**, interface **1380** connects base station **1320** to a single deployment **1330**, but it will be understood that wireless device **1310** may communicate with any number of base stations and/or CN deployments over interface **1380**, and that deployment **1330** may communicate with any number of base stations and/or other CN deployments over interface **1380**. The base station **1320** may comprise one or more other elements **1329** analogous to one or more of the one or more other elements **1319**.

[0191] The deployment **1330** may comprise any number of portions of any number of instances of one or more network functions (NFs). The deployment **1330** may comprise a processing system **1331** and a memory **1332**. The memory **1332** may comprise one or more computer-readable media, for example, one or more non-transitory computer readable media. The memory **1332** may include instructions **1333**. The processing system **1331** may process and/or execute instructions **1333**. Processing and/or execution of instructions **1333** may cause the deployment **1330** and/or processing system **1331** to perform one or more functions or activities. The memory **1332** may include data (not shown). One of the functions or activities performed by processing system **1331** may be to store data in memory **1332** and/or retrieve previously-stored data from memory **1332**. The deployment **1330** may access the interface **1380** using an interface system **1337**. The deployment **1330** may comprise one or more other elements **1339** analogous to one or more of the one or more other elements **1319**.

[0192] One or more of the systems **1311**, **1314**, **1315**, **1321**, **1324**, **1325**, and/or **1331** may comprise one or more controllers and/or one or more processors. The one or more controllers and/or one or more processors may comprise, for example, a general-purpose processor, a digital signal processor (DSP), a microcontroller, an application specific integrated circuit (ASIC), a field programmable gate array (FPGA) and/or other programmable logic device, discrete gate and/or transistor logic, discrete hardware components, an on-board unit, or any combination thereof. One or more of the systems **1311**, **1314**, **1315**, **1321**, **1324**, **1325**, and/or **1331** may perform signal coding/processing, data processing, power control, input/output processing, and/or any other functionality that may enable wireless device **1310**, base station **1320**, and/or deployment **1330** to operate in a mobile communications system.

[0193] Many of the elements described in the disclosed embodiments may be implemented as modules. A module is defined here as an element that performs a defined function and has a defined interface to other elements. The modules described in this disclosure may be implemented in hardware, software in combination with hardware, firmware, wetware (e.g. hardware with a biological element) or a combination thereof, which may be behaviorally equivalent. For example, modules may be implemented as a software routine written in a computer language configured to be executed by a hardware machine (such as C, C++, Fortran, Java, Basic, Matlab or the like) or a modeling/simulation program such as Simulink, Stateflow, GNU Octave, or LabVIEWMathScript. It may be possible to implement modules using physical hardware that incorporates discrete or programmable analog, digital and/or quantum hardware. Examples of programmable hardware comprise computers, microcontrollers, microprocessors, DSPs, ASICs, FPGAs, and complex programmable logic devices (CPLDs). Computers, microcontrollers and microprocessors may be programmed using languages such as assembly, C, C++ or the like. FPGAs, ASICs and CPLDs are often programmed using hardware description languages (HDL) such as VHSIC hardware description language (VHDL) or Verilog that configure connections between internal hardware modules with lesser functionality on a programmable device. The mentioned technologies are often used in combination to achieve the result of a functional module.

[0194] The wireless device **1310**, base station **1320**, and/or deployment **1330** may implement timers and/or counters. A timer/counter may start at an initial value. As used herein, starting may comprise restarting. Once started, the timer/counter may run. Running of the timer/counter may be associated with an occurrence. When the occurrence occurs, the value of the timer/counter may change (for example, increment or decrement). The occurrence may be, for example, an exogenous event (for example, a reception of a signal, a measurement of a condition, etc.), an endogenous event (for example, a transmission of a signal, a calculation, a comparison, a performance of an action or a decision to so perform, etc.), or any combination thereof. In the case of a timer, the occurrence may be the passage of a particular amount of time. However, it will be understood that a timer may be described and/or implemented as a counter that counts the passage of a particular unit of time. A timer/counter may run in a direction of a final value until it reaches the final value. The reaching of the final value may be referred to as expiration of the timer/counter. The final value may be referred to as a threshold. A timer/counter may be paused, wherein the present value of the timer/counter is held, maintained, and/or carried over, even upon the occurrence of one or more occurrences that would otherwise cause the value of the timer/counter to change. The timer/counter may be un-paused or continued, wherein the value that was held, maintained, and/or carried over begins changing again when the one or more occurrence occur. A timer/counter may be set and/or reset. As used herein, setting may comprise resetting. When the timer/counter sets and/or resets, the value of the timer/counter may be set to the initial value. A timer/counter may be started and/or restarted. As used herein, starting may comprise restarting. In some embodiments, when the timer/counter restarts, the value of the timer/counter may be set to the initial value and the timer/counter may begin to run.

[0195] FIGS. **14**A, **14**B, **14**C, and **14**D illustrate various example arrangements of physical core network deployments, each having one or more network functions or portions thereof. The core network deployments comprise a deployment **1410**, a deployment **1420**, a deployment **1430**, a deployment **1440**, and/or a deployment **1450**. Each deployment may be analogous to, for example, the deployment **1330** depicted in FIG. **13**. In particular, each deployment may comprise a processing system for performing one or more functions or activities, memory for storing data and/or instructions, and an interface system for communi-

cating with other network elements (for example, other core network deployments). Each deployment may comprise one or more network functions (NFs). The term NF may refer to a particular set of functionalities and/or one or more physical elements configured to perform those functionalities (e.g., a processing system and memory comprising instructions that, when executed by the processing system, cause the processing system to perform the functionalities). For example, in the present disclosure, when a network function is described as performing X, Y, and Z, it will be understood that this refers to the one or more physical elements configured to perform X, Y, and Z, no matter how or where the one or more physical elements are deployed. The term NF may refer to a network node, network element, and/or network device.

[0196] As will be discussed in greater detail below, there are many different types of NF and each type of NF may be associated with a different set of functionalities. A plurality of different NFs may be flexibly deployed at different locations (for example, in different physical core network deployments) or in a same location (for example, co-located in a same deployment). A single NF may be flexibly deployed at different locations (implemented using different physical core network deployments) or in a same location. Moreover, physical core network deployments may also implement one or more base stations, application functions (AFs), data networks (DNs), or any portions thereof. NFs may be implemented in many ways, including as network elements on dedicated or shared hardware, as software instances running on dedicated or shared hardware, or as virtualized functions instantiated on a platform (e.g., a cloud-based platform).

[0197] FIG. **14**A illustrates an example arrangement of core network deployments in which each deployment comprises one network function. A deployment **1410** comprises an NF **1411**, a deployment **1420** comprises an NF **1421**, and a deployment **1430** comprises an NF **1431**. The deployments **1410**, **1420**, **1430** communicate via an interface **1490**. The deployments **1410**, **1420**, **1430** may have different physical locations with different signal propagation delays relative to other network elements. The diversity of physical locations of deployments **1410**, **1420**, **1430** may enable provision of services to a wide area with improved speed, coverage, security, and/or efficiency.

[0198] FIG. **14**B illustrates an example arrangement wherein a single deployment comprises more than one NF. Unlike FIG. **14**A, where each NF is deployed in a separate deployment, FIG. **14**B illustrates multiple NFs in deployments **1410**, **1420**. In an example, deployments **1410**, **1420** may implement a software-defined network (SDN) and/or a network function virtualization (NFV).

[0199] For example, deployment **1410** comprises an additional network function, NF **1411**A. The NFs **1411**, **1411**A may consist of multiple instances of the same NF type, co-located at a same physical location within the same deployment **1410**. The NFs **1411**, **1411**A may be implemented independently from one another (e.g., isolated and/or independently controlled). For example, the NFs **1411**, **1411**A may be associated with different network slices. A processing system and memory associated with the deployment **1410** may perform all of the functionalities associated with the NF **1411** in addition to all of the functionalities associated with the NF **1411**A. In an example, NFs **1411**, **1411**A may be associated with different PLMNs, but deployment **1410**, which implements NFs **1411**, **1411**A, may be owned and/or operated by a single entity.

[0200] Elsewhere in FIG. **14**B, deployment **1420** comprises NF **1421** and an additional network function, NF **1422**. The NFs **1421**, **1422** may be different NF types. Similar to NFs **1411**, **1411**A, the NFs **1421**, **1422** may be co-located within the same deployment **1420**, but separately implemented. As an example, a first PLMN may own and/or operate deployment **1420** having NFs **1421**, **1422**. As another example, the first PLMN may implement NF **1421** and a second PLMN may obtain from the first PLMN (e.g., rent, lease, procure, etc.) at least a portion of the capabilities of deployment **1420** (e.g., processing power, data storage, etc.) in order to implement NF **1422**. As yet another example, the deployment may be owned and/or operated by one or more third parties, and the first PLMN and/or second PLMN may procure respective portions of the capabilities of the deployment **1420**. When multiple NFs are provided at a single deployment, networks may operate with greater speed, coverage, security, and/or efficiency.

[0201] FIG. **14**C illustrates an example arrangement of core network deployments in which a single instance of an NF is implemented using a plurality of different deployments. In particular, a single instance of NF **1422** is implemented at deployments **1420**, **1440**. As an example, the functionality provided by NF **1422** may be implemented as a bundle or sequence of subservices. Each subservice may be implemented independently, for example, at a different deployment. Each subservices may be implemented in a different physical location. By distributing implementation of subservices of a single NF across different physical locations, the mobile communications network may operate with greater speed, coverage, security, and/or efficiency.

[0202] FIG. **14**D illustrates an example arrangement of core network deployments in which one or more network functions are implemented using a data processing service. In FIG. **14**D, NFs **1411**, **1411**A, **1421**, **1422** are included in a deployment **1450** that is implemented as a data processing service. The deployment **1450** may comprise, for example, a cloud network and/or data center. The deployment **1450** may be owned and/or operated by a PLMN or by a non-PLMN third party. The NFs **1411**, **1411**A, **1421**, **1422** that are implemented using the deployment **1450** may belong to the same PLMN or to different PLMNs. The PLMN(s) may obtain (e.g., rent, lease, procure, etc.) at least a portion of the capabilities of the deployment **1450** (e.g., processing power, data storage, etc.). By providing one or more NFs using a data processing service, the mobile communications network may operate with greater speed, coverage, security, and/or efficiency.

[0203] As shown in the figures, different network elements (e.g., NFs) may be located in different physical deployments, or co-located in a single physical deployment. It will be understood that in the present disclosure, the sending and receiving of messages among different network elements is not limited to inter-deployment transmission or intra-deployment transmission, unless explicitly indicated.

[0204] In an example, a deployment may be a 'black box' that is preconfigured with one or more NFs and preconfigured to communicate, in a prescribed manner, with other 'black box' deployments (e.g., via the interface **1490**). Additionally or alternatively, a deployment may be configured to operate in accordance with open-source instructions (e.g., software) designed to implement NFs and communi-

cate with other deployments in a transparent manner. The deployment may operate in accordance with open RAN (O-RAN) standards.

[0205] In an example, a time service my comprise a service that provides time information (e.g., absolute time information, relative time information) to a wireless device. The time service may be provided by and/or via a communication network. The time service may determine and/or obtain time information from one or more time sources. The time service may be, for example, a coordinated universal time (UTC) service.

[0206] In an example, traceability may comprise tracing, authentication, verification, confirmation, and/or proof. In an example, traceability of a time service (e.g., traceability to UTC) may comprise an indication that time information is accurate (e.g., accurate to a particular degree of accuracy), precise (e.g., to a particular degree of precision) provided by and/or determined based on one or more particular (e.g., identified) sources of time, authentic, and/or calibrated. In an example, traceability may be associated with particular time information and/or a particular time service. In an example, a wireless device may require and/or request that a network provide traceability associated with particular time information and/or a particular time service. In an example, a network that provides a time service may or may not provide traceability and/or specific aspects of traceability.

[0207] FIG. **15** is an example call flow illustrates an example of RRC connection establishment procedure. In an example, a UE may receive a master information block (MIB) information (e.g., information element, parameter, message) and/or a system information block (SIB) **1** information (e.g., information element, parameter, message) from a base station (e.g., (R)AN). The MIB information may comprise system information. For example, the MIB information may comprise at least one of parameter: systemFrameNumber, subCarrierSpacingCommon, ssb-SubcarrierOffset, dmrs-TypeA-Position, pdcch-ConfigSIB1, cellBarred, intraFreqReselection, and/or the like. In an example, the SIB 1 information may comprise information relevant when evaluating if a UE is allowed to access a cell and defines the scheduling of other system information. In an example, the SIB 1 may comprise radio resources configuration information that is common for all UEs and barring information applied to the unified access control. In an example, the UE may receive SIB x information (e.g., information element, parameter, message) from the (R)AN and/or a control plane function (CPF) (e.g., an AMF). For example, the SIB x information may comprise SIB 2, SIB 3, SIB 4, and/or the like, other than SIB 1. In an example, the SIB 2 information may comprise cell re-selection information common for intra-frequency, inter-frequency and/or inter-RAT cell re-selection (e.g., applicable for more than one type of cell re-selection but not necessarily all) as well as intra-frequency cell re-selection information other than neighbouring cell related. For example, the SIB 2 message may comprise at least one parameter: cellReselectionInfoCommon, cellReselectionServingFreqInfo, intraFreqCellReselectionInfo, and/or the like. In an example, the SIB 3 information may comprise neighbouring cell related information relevant only for intra-frequency cell re-selection. The IE includes cells with specific re-selection parameters as well as blacklisted cells. For example, the SIB 3 information may comprise at least one parameter: intraFreqNeighCellList, and/or intraFreqBlackCellList.

[0208] In response to the message received from the (R)AN and/or the CPF, the UE may transmit at least one random access preamble to the (R)AN. In an example, the UE may transmit at least one random access preamble to the CPF (e.g., via the (R)AN). For example, the UE may send the at least one random access preamble to the (R)AN via a message **1** (MSG **1**). In response to the at least one random access preamble received from the UE, the (R)AN may send a random access response message to the UE. In an example, the CPF may transmit a random access response message to the UE (e.g., via the (R)AN). For example, the CPF and/or the (R)AN may send the random access response message to the UE via a message **2** (MSG **2**).

[0209] In an example, in response to the random access response message, the UE may send a message (e.g., RRC setup request) to the (R)AN and/or the CPF. For example, the UE may send the RRC setup request message via a message **3** (MSG **3**). For example, the UE may send the RRC setup request message to the CPF via the (R)AN. For example, the RRCSetupRequest message may indicate establishing an RRC connection for the UE. The RRCSetupRequest message may comprise at least one of: a UE identity (e.g., TMSI), a parameter (e.g., establishmentCause) indicating a cause value of RRC establishment, and/or a dedicatedNAS-Message. For example, the establishmentCause may comprise at least one of value: emergency, highPriorityAccess, mt-Access, mo-Signalling, mo-Data, mo-VoiceCall, mo-VideoCall, mo-SMS, mps-PriorityAccess, mcs-PriorityAccess, and/or the like.

[0210] In response to the message received from the UE, the (R)AN and/or the CPF may send a RRC setup message to the UE via a message **4** (MSG **4**). For example, the CPF may send the RRC setup message to the UE via the (R)AN. For example, the RRC setup message may be used to establish SRB **1**. In an example, the RRCSetup message may comprise at least one information element: a masterCellGroup, a radioBearerConfig and/or dedicatedNAS-Message. The masterCellGroup may indicate that the network configures the RLC bearer for the SRB1. The radioBearerConfig may indicate that the SRB1 may be configured in RRC setup.

[0211] In an example, in response to the message received from the (R)AN and/or the CPF, the UE may send a RRCSetupComplete message to the (R)AN. For example, the UE may send a RRCSetupComplete message to the CPF via a message **5** (MSG **5**). For example, the UE may send the RRCSetupComplete message to the CPF via the (R)AN. RRCSetupComplete message may comprise at least one parameter: a selectedPLMN-Identity, a registeredCPF, a guami-Type (e.g., native, mapped), s-NSSAI-List (e.g. list of network slice identifiers), dedicatedNAS-Message, a TMSI, and/or the like. The registeredCPF may comprise a PLMN identity and/or a CPF identifier. In an example, the RRCSetupComplete message may comprise a NAS message. For example, the dedicatedNAS-Message of the RRCSetupComplete message may comprise the NAS message. For example, the dedicatedNAS-Message may comprise a registration request message.

[0212] FIG. **16** is a diagram illustrating an example NG-RAN Architecture supporting a PC5 interface. In an example, the PC5 interface may refer to a reference point between two UEs, where the two UEs may directly com-

municate over a direct channel. In an example, a sidelink may be a direct link between two UEs without a relay node. In an example, a sidelink communication may be a direct communication between two UEs without the participation of a base station in the transmission and reception of data traffic.

[0213] In an example, an NR sidelink communication may indicate Access Stratum (AS) functionality enabling at least Vehicle-to-Everything (V2X) Communication, between two or more nearby UEs, using NR technology but not traversing any network node. In an example, a V2X sidelink communication may indicate AS functionality enabling V2X Communication, between nearby UEs, using E-UTRA technology but not traversing any network node.

[0214] In an example, sidelink transmission and reception over the PC5 interface may be supported when the UE is inside NG-RAN coverage, irrespective of which RRC state the UE is in, and when the UE is outside NG-RAN coverage. In an example, support of V2X services via the PC5 interface may be provided by the NR sidelink communication and/or the V2X sidelink communication. The NR sidelink communication may be used to support other services than V2X services. In an example, the NR sidelink communication may support one of three types of sidelinks/transmission modes for a pair of a Source Layer-2 ID and a Destination Layer-2 ID in the AS: a unicast sidelink/unicast transmission, a groupcast sidelink/groupcast transmission, and/or a broadcast sidelink/broadcast transmission.

[0215] In an example, the unicast sidelink/unicast transmission may support one PC5-RRC connection between peer UEs for the pair. In an example, the unicast sidelink/unicast transmission may support transmission and reception of control information and user traffic between peer UEs in sidelink. In an example, the unicast sidelink/unicast transmission may support sidelink Hybrid Automatic Repeat Request (HARQ) feedback. In an example, the unicast sidelink/unicast transmission may support sidelink transmit power control. In an example, the unicast sidelink/unicast transmission may support Radio Link Control Acknowledged Mode (RLC AM). In an example, the unicast sidelink/unicast transmission may support detection of radio link failure for the PC5-RRC connection.

[0216] In an example, the groupcast sidelink/groupcast transmission may support transmission and reception of user traffic among UEs belonging to a group in sidelink. In an example, the groupcast sidelink/groupcast transmission may support sidelink HARQ feedback. In an example, the broadcast sidelink/broadcast transmission may support transmission and reception of user traffic among UEs in sidelink.

[0217] FIG. **17** is an example diagram illustrating a wireless device (e.g., UE, Remote UE) connects to a base station via a direct path and/or an indirect path. In an example, the Remote UE may connect to the base station directly via the direct path. The direct path may indicate a type of UE-to-Network (U2N) transmission path, where data is transmitted between the wireless device and a network (e.g., the base station) without sidelink relaying. In an example, the direct path may comprise at least one RRC connection and/or at least one radio bearer. In an example, the Remote UE may connect to the base station directly via a relay wireless device (e.g., Relay UE) over the indirect path. The indirect path may indicate a type of UE-to-Network transmission path, where data is forwarded via the relay wireless device between the wireless device and a network (e.g., the base station). In an example, a Relay UE (e.g., U2N Relay UE) may be a UE that provides functionality to support connectivity to the network for U2N Remote UE(s). In an example, the Remote UE (e.g., U2N Remote UE) may be a UE that communicates with the network via a U2N Relay UE. In an example, a wireless device may connect to a base station via multiple paths. The multiple paths may comprise at least one direct path and/or at least one indirect path. In this specification, the terms/terminologies "Relay UE", "U2N Relay UE", "L2 UE-to-Network Relay", and/or "L2 U2N Relay UE" may be used interchangeably. In this specification, the terms/terminologies "UE", "Remote UE", "U2N Remote UE", and/or "L2 U2N Remote UE" may be used interchangeably. In this specification, the terms/terminologies "base station", "gNB", and/or "(R)AN" may be used interchangeably.

[0218] FIG. **18** is an example diagram illustrating a user plane protocol stack for L2 UE-to-Network Relay. FIG. **19** is an example diagram illustrating a control plane protocol stack for L2 UE-to-Network Relay. In an example, a SRAP sublayer may be placed above RLC sublayer for both control plane (CP) and user plane (UP) at both PC5 interface and Uu interface. The Uu interface may be between a wireless device and a base station. The Uu SDAP, PDCP and RRC may be terminated between layer 2 (L2) U2N Remote UE and gNB, while SRAP, RLC, MAC and PHY are terminated in each hop (e.g., the link between L2 U2N Remote UE and the L2 U2N Relay UE, and the link between L2 U2N Relay UE and the gNB).

[0219] In an example, for L2 U2N Relay, the SRAP sublayer over PC5 hop may be for the purpose of bearer mapping. The SRAP sublayer may not be present over PC5 hop for relaying the L2 U2N Remote UE's message on BCCH and PCCH. For L2 U2N Remote UE's message on SRB0, the SRAP header may not be present over PC5 hop between the L2 U2N Remote UE and the L2 U2N Relay UE, but the SRAP header may be present over Uu hop between the L2 U2N Relay UE and the gNB for both DL and UL.

[0220] In an example, for L2 U2N Relay UE, for uplink, the Uu SRAP sublayer may perform UL bearer mapping between ingress PC5 Relay RLC channels for relaying and egress Uu Relay RLC channels over the L2 U2N Relay UE Uu interface. For uplink relaying traffic, the different end-to-end Uu Radio Bearers (Signalling Radio Bearer (SRB)s or Data Radio Bearer (DRB)s) of the same L2 U2N Remote UE and/or different L2 U2N Remote UEs may be multiplexed over the same egress Uu Relay RLC channel. In an example, the relaying traffic may indicate user data packages send/receive between the L2 U2N Remote UEs and the gNB, where the user data packages may be relayed by the L2 U2N Relay UE. In an example, the PC5 Relay RLC channel may be a communication channel/path between a first RLC entity (e.g., PC5-RLC as shown in FIG. **18**) of a first wireless device (e.g., a Relay UE) and a second RLC entity (e.g., PC5-RLC as shown in FIG. **18**) of a second wireless (e.g., a Remote UE). In an example, the PC5 Relay RLC channel may be used for relay traffic/service and an indirect path. In an example, the Uu Relay RLC channel may be a communication channel/path between a first RLC entity (e.g., Uu-RLC as shown in FIG. **18**) of a first wireless device (e.g., a Relay UE) and a second RLC entity (e.g., Uu-RLC as shown in FIG. **18**) of a base station (e.g., a (R)AN). In an example, the Uu Relay RLC channel may be used for relay traffic/service and an indirect path.

[0221] In an example, for L2 U2N Relay UE, for uplink, the Uu SRAP sublayer may support L2 U2N Remote UE identification for the UL traffic. The identity information of L2 U2N Remote UE end-to-end Uu Radio Bearer and a local Remote UE ID may be included in the Uu SRAP header at UL in order for gNB to correlate the received packets for the specific PDCP entity associated with the right end-to-end Uu Radio Bearer of the L2 U2N Remote UE. In an example, for L2 U2N Relay UE, for uplink, the PC5 SRAP sublayer at the L2 U2N Remote UE may support UL bearer mapping between L2 U2N Remote UE end-to-end Uu Radio Bearers and egress PC5 Relay RLC channels.

[0222] In an example, for L2 U2N Relay UE, for downlink, the Uu SRAP sublayer may perform DL bearer mapping at gNB to map end-to-end Uu Radio Bearer (SRB, DRB) of L2 U2N Remote UE into Uu Relay RLC channel. The Uu SRAP sublayer of the L2 U2N Relay UE may perform DL bearer mapping and data multiplexing between multiple end-to-end Radio Bearers (SRBs or DRBs) of a L2 U2N Remote UE and/or different L2 U2N Remote UEs and one Uu Relay RLC channel over the L2 U2N Relay UE Uu interface.

[0223] In an example, for L2 U2N Relay UE, for downlink, the Uu SRAP sublayer supports L2 U2N Remote UE identification for DL traffic. The identity information of L2 U2N Remote UE end-to-end Uu Radio Bearer and a local Remote UE ID may be included into the Uu SRAP header by the gNB at DL for the L2 U2N Relay UE to enable DL bearer mapping between ingress Uu Relay RLC channels and egress PC5 Relay RLC channel of the L2 U2N Relay UE.

[0224] In an example, for L2 U2N Relay UE, for downlink, the PC5 SRAP sublayer at the L2 U2N Relay UE may perform DL bearer mapping between ingress Uu Relay RLC channels and egress PC5 Relay RLC channels. In an example, for L2 U2N Relay UE, for downlink, the PC5 SRAP sublayer at the L2 U2N Remote UE may correlate the received packets with the right PDCP entity associated with the given end-to-end Radio Bearer of the L2 U2N Remote UE based on the identity information included in the PC5 SRAP header.

[0225] In an example, a local Remote UE ID may be included in both PC5 SRAP header and Uu SRAP header. The L2 U2N Relay UE may be configured by the gNB with the local Remote UE ID(s) to be used in SRAP header. The L2 U2N Remote UE may obtain the local Remote ID from the gNB via Uu RRC messages comprising RRCSetup, RRCReconfiguration, RRCResume and RRCReestablishment.

[0226] In an example, the end-to-end DRB(s) or end-to-end SRB(s), except SRB0, of L2 U2N Remote UE may be multiplexed to the PC5 Relay RLC channels and Uu Relay RLC channels in both PC5 hop and Uu hop, but an end-to-end DRB and an end-to-end SRB can neither be mapped into the same PC5 Relay RLC channel nor be mapped into the same Uu Relay RLC channel.

[0227] In an example, it may be the gNB responsibility to avoid collision on the usage of local Remote UE ID. The gNB may update the local Remote UE ID by sending the updated local Remote UE ID via RRCReconfiguration message. The serving gNB may perform local Remote UE ID update independent of the PC5 unicast link L2 ID update procedure.

[0228] FIG. **20** is an example diagram illustrating a Layer 2 data flow. In an example, a packet received by a layer may be called Service Data Unit (SDU) while the packet output of a layer may be referred to by Protocol Data Unit (PDU). In an example, a PDU may comprise a SDU and/or a header. In an example, a PDCP PDU may comprise a PDCP SDU and/or a PDCP header. In an example, a RLC PDU may comprise a RLC SDU and/or a RLC header. In an example, a RLC PDU/SDU may comprise a PDCP PDU. In an example, a PDCP PDU may be segmented into two or more RLC PDUs/SDUs. In an example, a MAC layer may generate a transport block by concatenating two RLC PDUs from RBx and one RLC PDU from RBy. In an example, the two RLC PDUs from RBx each corresponds to one IP packet (n and n+1) while the RLC PDU from RBy is a segment of an IP packet (m). In an example, as shown in FIG. **20**, H may depict headers and/or sub-headers.

[0229] FIG. **21** is an example call flow illustrating a second wireless device (e.g., a Remote UE shown in FIG. **21**) establishes an indirect path with a base station (e.g., a (R)AN shown in FIG. **21**) via a first wireless device (e.g., a Relay UE as shown in FIG. **21**). In an example, the Remote UE and the Relay UE may perform discovery procedure, and may establish a PC5 RRC connection using the NR sidelink PC5 unicast link establishment procedure. In an example, the Remote UE may send a first RRC message (i.e., RRCSetupRequest) for its connection establishment with (R)AN via the Relay UE, using a specified PC5 Relay RLC channel configuration. If the Relay UE is not in RRC_CONNECTED, it may need to do its own Uu RRC connection establishment with the (R)AN upon reception of a message on the specified PC5 Relay RLC channel. In an example, after Relay UE's RRC connection establishment procedure, the (R)AN may configures SRB0 relaying Uu Relay RLC channel to the Relay UE.

[0230] In an example, the (R)AN may respond with an RRCSetup message to Remote UE via the Relay UE. The RRCSetup message may be sent to the Remote UE using SRB0 relaying Uu Relay RLC channel over Uu between the (R)AN and the Relay UE and a specified PC5 Relay RLC channel over PC5 between the Relay UE and the Remote UE. In an example, the (R)AN and Relay UE may perform relaying channel setup procedure over Uu. According to the configuration from (R)AN, the Relay UE and the Remote UE may establish a PC5 Relay RLC channel for relaying of SRB1 between the Remote UE and the Relay UE over PC5. In an example, the Remote UE may send the RRCSetupComplete message to the (R)AN via the Relay UE using SRB1 relaying channel over PC5 and SRB1 relaying channel configured to the Relay UE over Uu. Then the Remote UE is as in RRC_CONNECTED with the (R)AN.

[0231] In example, the Remote UE and the (R)AN may establish security following the Uu security mode procedure and the security messages are forwarded through the Relay UE. In example, the (R)AN may send an RRCReconfiguration message to the Remote UE via the Relay UE, to setup the end-to-end SRB2/DRBs of the Remote UE. The Remote UE sends an RRCReconfigurationComplete message to the (R)AN via the Relay UE as a response. In addition, the (R)AN may configure additional Uu Relay RLC channels between the (R)AN and the Relay UE, and PC5 Relay RLC channels between the Relay UE and the Remote UE for the relaying traffic.

[0232] FIG. **22** is an example call flow illustrating a Remote UE establishes multiple paths with a base station. In an example, the Remote UE may have established a direct path with the (R)AN, and the Remote UE may send/receive uplink (UL)/downlink (DL) data to/from the (R)AN via the direct path. The uplink may be a direction from the Remote UE to the (R)AN. The downlink may be a direction from the (R)AN to the Remote UE.

[0233] In an example, the (R)AN may configure the Remote UE (e.g., L2 U2N Remote UE) to measure radio link signal of Uu interface between the L2 U2N Remote UE and the (R)AN for direct path. In an example, the (R)AN may configure the Remote UE (e.g., L2 U2N Remote UE) to measure sidelink signal of PC5 interface for one or more Relay UEs (e.g., L2 U2N Relay UEs). In an example, the L2 U2N Remote UE may send a measurement report to the (R)AN when configured measurement reporting criteria are met. In an example, The L2 U2N Remote UE may report Uu measurements results of Uu interface and/or one or multiple candidate L2 U2N Relay UE(s), after it measures/discovers the candidate L2 U2N Relay UE(s). In an example, the L2 U2N Remote UE may filter the appropriate L2 U2N Relay UE(s) according to relay selection criteria before reporting. The L2 U2N Remote UE may report the L2 U2N Relay UE candidate(s) that fulfil the higher layer criteria. In an example, the measurement reports may comprise at least a L2 U2N Relay UE ID, a L2 U2N Relay UE's serving cell ID, and/or a sidelink measurement quantity information. In an example, Sidelink Discovery Reference Signal Received Power (SD-RSRP) may be used as sidelink measurement quantity. In an example, the SD-RSRP may be defined as linear average over the power contributions of the resource elements that carry demodulation reference signals associated with PSDCH for which CRC has been validated. The reference point for the SD-RSRP may be the antenna connector of the UE. If receiver diversity is in use by the UE, the reported value may not be lower than the corresponding SD-RSRP of any of the individual diversity branches.

[0234] In an example, based on the measurement report, the (R)AN may determine to add an indirect path between the L2 U2N Remote UE and the (R)AN via a Relay UE (e.g., L2 U2N Relay UE). In an example, the (R)AN may send an RRCReconfiguration message to the L2 U2N Relay UE. The RRCReconfiguration message may comprise at least the L2 U2N Remote UE's local ID and L2 ID, Uu and PC5 Relay RLC channel configuration for relaying, and bearer mapping configuration.

[0235] In an example, the (R)AN may send a RRCReconfiguration message to the L2 U2N Remote UE. The RRCReconfiguration message may comprise at least the L2 U2N Relay UE ID, Remote UE's local ID, PC5 Relay RLC channel configuration for relay traffic and/or the associated end-to-end radio bearer(s). In an example, the RRCReconfiguration message may comprise an indication indicating the L2 U2N Remote UE to add the indirect path to the existing direct path.

[0236] In an example, the L2 U2N Remote UE may establish at least one PC5 RRC connection with the L2 U2N Relay UE. In an example, the L2 U2N Remote UE may send a RRCReconfigurationComplete message to the (R)AN via the L2 U2N Relay UE. The RRCReconfigurationComplete message may indicate that the indirect path has been added. In an example, the L2 U2N Remote UE may communicate (e.g., send/receive UL/DL data) with the (R)AN via the direct path, indirect path, and/or both paths.

[0237] FIG. **23** is an example diagram illustrating problems of existing technologies. In existing technologies, in a scenario of path switching (e.g., from indirect path to direct path), and for the downlink data forwarding, the Relay UE may send the DL data acknowledgement to the S-(R)AN based on whether it received the DL data from the S-(R)AN, and may not consider whether the DL data packages have been received by the Remote UE or not. Consequently, some DL data packets may be lost during the handover. In an example, a downlink (DL) may indicate a direction from a network (e.g., (R)AN) to a wireless device (e.g., Remote UE). In an example, an uplink (UL) may indicate a direction from a wireless device to a network.

[0238] As shown in FIG. **23**, the Remote UE may have established an indirect path between the Remote UE and the source base station (e.g., S-(R)AN) via a Relay UE, and the S-(R)AN may determine to switch the Remote UE to a direct path between the Remote UE and a target base station (e.g., T-(R)AN). During the handover, the S-(R)AN may receive 9 DL data packets (e.g., 1,2,3,4,5,6,7,8,9) from a UPF. The S-(R)AN may send the 9 DL data packets (e.g., 1,2,3,4,5, 6,7,8,9) to the Remote UE via the Relay UE by the indirect path. The Relay UE may receive 5 DL data packets (e.g., 1,2,3,5,6). The Relay UE may relay/forward the 5 DL data packets (e.g., 1,2,3,5,6) to the Remote UE. In an example, the Relay UE may send a first acknowledgement message to the S-(R)AN indicating successfully receiving of the 5 DL data packets (e.g., 1,2,3,5,6). The first acknowledgement message may comprise acknowledgements of the 5 DL data packets (e.g., 1,2,3,5,6). In an example, the Remote UE may receive 3 DL packets (e.g., 1,2,3) from the Relay UE. The Remote UE may send a second acknowledgement message to the Relay UE indicating successfully receiving of the 3 DL data packets (e.g., 1,2,3). The second acknowledgement message may comprise acknowledgements of the 3 DL data packets (e.g., 1,2,3). In an example, based on the first acknowledgement message, the S-(R)AN may think the 5 DL data packets (e.g., 1,2,3,5,6) have been received by the Remote UE successfully, it may discard the 5 DL data packets (e.g., 1,2,3,5,6) from the buffer. The S-(R)AN may forward un-acknowledged DL data packets (e.g., 4,7,8,9) to the T-(R)AN, the T-(R)AN may forward the un-acknowledged DL data packets (e.g., 4,7,8,9) to the Remote UE over the direct path after the handover. Consequently, the Remote UE received 7 DL data packets (e.g., 1,2,3,4,7,8,9), and 2 DL data packets (e.g., 5,6) were lost.

[0239] FIG. **24** is another example diagram illustrating problems of existing technologies. For example, during the handover from indirect path to the direct path. The PDCP entity/layer of S-(R)AN (Uu-PDCP as shown in FIG. **24**) may send 5 PDCP PDUs (e.g., 1,2,3,4,5) to the RLC entity/layer of S-(R)AN (Uu-RLC as shown in FIG. **24**) via the Uu-SRAP layer. The Uu-SRAP layer may transmit/relay the PDCP PDUs (e.g., 1,2,3,4,5). In an example, the RLC entity/layer of the S-(R)AN may segment each of the PDCP PDU to 2 RLC-PDUs. For example, the RLC entity/layer of the S-(R)AN may segment PDCP PDU 1 to RLC-PDU 1-1 and RLC-PDU 1-2. In an example, the RLC entity/layer of the S-(R)AN may send RLC PDUs (1-1,1-2,2-1,2-2,3-1,3-2,4-1,4-2,5-1,5-2) to the Relay UE. In an example, the RLC entity/layer of the Relay UE may send the RLC PDUs (1-1,1-2,2-1,2-2,3-1,3-2,4-1,4-2,5-1,5-2) to the Remote UE.

The RLC entity/layer of the Relay UE may send an acknowledgement message to the RLC entity/layer of the S-(R)AN indicating the RLC PDUs (1-1,1-2,2-1,2-2,3-1,3-2,4-1,4-2,5-1,5-2) have been received successfully. In an example, based on the acknowledgement message, the RLC entity/layer of the S-(R)AN may map the acknowledgements of RLC PDUs (1-1,1-2,2-1,2-2,3-1,3-2,4-1,4-2,5-1,5-2) to the 5 PDCP PDUs (e.g., 1,2,3,4,5). The RLC entity/layer of the S-(R)AN may indicate the PDCP entity/layer of the S-(R)AN that the 5 PDCP PDUs (e.g., 1,2,3,4,5) have been received by peer wireless device. The PDCP entity/layer of the S-(R)AN may think the 5 PDCP PDUs (e.g., 1,2,3,4,5) have been received by the Remote UE, and may discard the 5 PDCP PDUs (e.g., 1,2,3,4,5) from the buffer.

[0240] In an example, the RLC entity/layer of the Remote UE may receive RLC PDUs (1-1,1-2,2-1,2-2,3-1,3-2). The RLC entity/layer of the Remote UE may assembly the RLC PDUs (1-1,1-2,2-1,2-2,3-1,3-2) to PDCP PDUs (1,2,3) and send the PDCP PDUs (1,2,3) to the PDCP entity/layer of the Remote UE. The RLC entity/layer of the Remote UE may send an acknowledgement message to the RLC entity/layer of the Relay UE indicating the RLC PDUs (1-1,1-2,2-1,2-2,3-1,3-2) have been received successfully.

[0241] Consequently, Remote UE have not received 2 PDCP PDUs (4,5), but it is assumed from the S-(R)AN perspective that the Remote UE has received them successfully, and 2 PDCP PDUs (4,5) will be lost during the handover.

[0242] Example embodiments provide enhanced mechanisms to avoid losing of downlink data packet during a handover. Example embodiments provide enhanced mechanisms to enable a first wireless device to send a second acknowledgement to a base station which downlink data packets have been received by a second wireless device successfully, where the second acknowledgement is based on a first acknowledgements received from the second wireless device. Consequently, downlink data packets (e.g., PDCP PDUs) will be relayed/forwarded by the first wireless device reliably. No downlink data packets will be lost during the handover.

[0243] In an example embodiment, a first wireless device may receive from a base station, a first message indicating a reliable downlink data relaying. In an example, the first wireless device may receive from the base station, a plurality of downlink data packets associated with a second wireless device. In an example, the first wireless device may transmit the plurality of downlink data packets to the second wireless device. In an example, based on the first message, the first wireless device may determine waiting for at least one acknowledgements of the plurality of downlink data packets from the second wireless device. In an example, the first wireless device may receive one or more first acknowledgements of the plurality of downlink data packets from the second wireless device. In an example, based on the one or more first acknowledgements, the first wireless device may transmit one or more second acknowledgements of the plurality of downlink data packets to the base station.

[0244] In an example embodiment, a first wireless device may receive from a base station, a first message indicating a reliable data relaying. In an example, based on the first message, the first wireless device may determine waiting for one or more first acknowledgements of a plurality of downlink data packets from a second wireless device, wherein the plurality of downlink data packets is transmitted to the second wireless device. In an example, based on the one or more first acknowledgements, the first wireless device may transmit one or more second acknowledgements of the plurality of downlink data packets to the base station.

[0245] FIG. **25** is an example call flow which may comprise one or more actions. In an example, by using the procedure(s) specified in FIG. **21** and/or in FIG. **22**, a Remote UE may establish an indirect path with a base station (e.g., a source base station, S-(R)AN) via a Relay UE. The Remote UE may send/receive uplink (UL)/downlink (DL) data to/from the S-(R)AN via the indirect path.

[0246] In an example, the S-(R)AN may configure the Remote UE to measure radio link signal of Uu interface between the Remote UE and the S-(R)AN for direct path. In an example, the S-(R)AN may configure the Remote UE to measure sidelink signal of PC5 interface for one or more Relay UEs. In an example, the Remote UE may send a measurement report to the S-(R)AN when configured measurement reporting criteria are met. In an example, The Remote UE may report Uu measurements results of Uu interface and/or one or multiple candidate Relay UE(s). In an example, the Remote UE may filter the appropriate Relay UE(s) according to relay selection/reselection criteria before reporting. The Remote UE may report the Relay UE candidate(s) that fulfil the higher layer criteria. In an example, the measurement reports may comprise at least a Relay UE ID, a Relay UE's serving cell ID, and/or a sidelink measurement quantity information. In an example, Sidelink Discovery Reference Signal Received Power (SD-RSRP) may be used as sidelink measurement quantity. In an example, the SD-RSRP may be defined as linear average over the power contributions of the resource elements that carry demodulation reference signals associated with PSDCH for which CRC has been validated. The reference point for the SD-RSRP may be the antenna connector of the UE. If receiver diversity is in use by the UE, the reported value may not be lower than the corresponding SD-RSRP of any of the individual diversity branches.

[0247] In an example, based on the measurement report and/or Radio Resource Management (RRM) information, the S-(R)AN may determine handover the Remote UE to a target base station (e.g., T-(R)AN) to a direct path between the Remote UE and the T-(R)AN.

[0248] In an example, the RRM may comprise a wide range of techniques and procedures, including power control, scheduling, cell search, cell reselection, handover, radio link or connection monitoring, and/or connection establishment/re-establishment. In an example, the RRM information/RRM configuration may comprise both beam measurement information (for layer 3 mobility) associated to Synchronization Signal Block (SSB)(s) and Channel State Information Reference Signal (CSI-RS)(s) for the reported cell(s) if both types of measurements are available. In an example, if Carrier Aggregation (CA) CA is configured, the RRM information/RRM configuration may comprise the list of best cells on each frequency for which measurement information is available. In an example, the RRM (measurement) information may also include the beam measurement for the listed cells that belong to the target gNB.

[0249] In an example, a first base station (e.g., the S-(R)AN) may issue/transmit a Handover Request message to a second base station (e.g., the T-(R)AN). In an example, the Handover Request message may comprise a transparent RRC container with necessary information to prepare the

handover at the T-(R)AN. In an example, the Handover Request message may comprise at least one of: the target cell ID, KgNB*, the C-RNTI of the Remote UE in the S-(R)AN, RRM configuration including Remote UE inactive time, basic AS-configuration including antenna Info and DL Carrier Frequency, the current QoS flow to DRB mapping rules applied to the Remote UE, the SIB1 from S-(R)AN, the Remote UE capabilities for different RATs, PDU session related information, and/or measurement report information including beam-related information if available. The PDU session related information may comprise the slice information and QoS flow level QoS profile(s). In an example, the S-(R)AN may also request a Dual Active Protocol Stack (DAPS) handover for one or more DRBs. In an example, the DAPS handover may allow a wireless device to receive and transmit data simultaneously to source cell and target cell in a handover ensuring seamless data continuity. In an example, after transmitting a Handover Request message, the S-(R)AN may not reconfigure the Remote UE to perform Reflective QoS flow to DRB mapping.

[0250] In an example, the T-(R)AN may perform admission control. In an example, the admission control may comprise determining whether to accept the handover based on the one or more parameters in the Handover Request message. In an example, the admission control may comprise determining whether to accept the handover based on radio resource of the T-(R)AN to support the RRC connections/PDU sessions/network slices for the Remote UE. In an example, the radio resource may comprise at least one of: frequency resource, time resource, and/or radio bearer resource. In an example the time resource may comprise/indicate (NR) frame, subframes, slots, OFDM symbols, Bandwidth Part (BWP), RG (Resource Grid). In an example, the frequency resource may indicate resource of frequency (e.g., frequency band, carrier, subcarrier) allocated for sending and/or receiving signaling and/or user data for a wireless device. In an example, the frequency resource may comprise/indicate BWP, resource elements (REs) and resource blocks (RBs). In an example, radio bearer resource may indicate resource for a radio bearer. In an example, the radio bearer resource may indicate/comprise time resource and/or frequency resource for the radio bearer. In an example, the radio bearer may comprise signaling radio bearer and/or data radio bearer.

[0251] In an example, the T-(R)AN may perform network slice-aware admission control if the network slice information is received from the S-(R)AN. In an example, if the PDU sessions are associated with non-supported network slices, the T-(R)AN may reject such PDU Sessions. In an example, the T-(R)AN may prepare the handover with layer 1 (L1)/layer 2 (L2). In an example, the T-(R)AN may send a Handover Request Acknowledge message to the S-(R)AN. The Handover Request Acknowledge message may comprise a transparent container to be sent to the Remote UE as an RRC message to perform the handover. The T-(R)AN may indicate if a DAPS handover is accepted or not by the T-(R)AN.

[0252] In an example, as soon as the S-(R)AN receives the Handover Request Acknowledge message, or as soon as the transmission of the handover command is initiated in the downlink, the S-(R)AN may perform data forwarding by forwarding downlink data packets to the T-(R)AN. In an example, for DRBs configured with DAPS, downlink PDCP SDUs may be forwarded with SN assigned by the S-(R)AN, until SN assignment is handed over to the T-(R)AN.

[0253] In an example, a first wireless device (e.g., the Relay UE) may receive a first message (e.g., a RRCReconfiguration, SIB, MIB) from a base station (e.g., the S-(R)AN), the first message/RRCReconfiguration message may indicate a reliable downlink data relaying. In an example, the first message/RRCReconfiguration message may comprise a parameter (e.g., Reliable Data Relay Indication, Reliable DL Data Relay Indication, Lossless Path Switch Indication) indicating a reliable downlink data relaying for one or more second wireless devices (e.g., the Remote UE).

[0254] In an example, the first message/RRCReconfiguration message and/or the parameter (e.g., Reliable Data Relay Indication, Reliable DL Data Relay Indication, Lossless Path Switch Indication) may indicate reliable data relaying/forwarding between a first node (e.g., a wireless device) and a second node (e.g., a base station, a second wireless device). In an example, the first message/RRCReconfiguration message and/or the parameter (e.g., Reliable Data Relay Indication, Reliable DL Data Relay Indication, Lossless Path Switch Indication) may indicate reliable data relaying/forwarding between a first node (e.g., a wireless device) and a second node (e.g., a base station, a second wireless device) during a handover.

[0255] In an example, the reliable downlink data relaying (and/or reliable data relaying/forwarding) may indicate the first wireless device (e.g., the Relay UE) may relay/forward a plurality of downlink data packets from the base station (e.g., the S-(R)AN) to a second wireless device (e.g., the Remote UE) over an indirect path without losing at least one of the plurality of downlink data packets (e.g., during a handover).

[0256] In an example, the reliable downlink data relaying (and/or reliable data relaying/forwarding) may indicate the first wireless device (e.g., the Relay UE) may relay/forward a plurality of downlink data packets from the base station (e.g., the S-(R)AN) to a second wireless device (e.g., the Remote UE) over an indirect path with a configured number of downlink data packets lost during the relaying/forwarding because of handover. For example, the reliable downlink data relaying may indicate packet loss rate is lower than a configured number (e.g., 0.01%) (e.g., during a handover). In an example, the packet loss rate may indicate data packets that could not be received by a target (e.g., Remote UE) comprising packets dropped, packets lost in transmission and/or packets received in wrong format.

[0257] In an example, the reliable downlink data relaying (and/or reliable data relaying/forwarding) may indicate a lossless path switching (e.g., from indirect path to direct path) and/or a lossless handover.

[0258] In an example, the reliable downlink data relaying (and/or reliable data relaying/forwarding) may indicate the first wireless device (e.g., the Relay UE) waits for one or more first acknowledgements from the second wireless device (e.g., the Remote UE) before it sends one or more second acknowledgements to the base station (e.g., the S-(R)AN).

[0259] In an example, the reliable downlink data relaying (and/or reliable data relaying/forwarding) may indicate one or more second acknowledgements sent by the first wireless device (e.g., the Relay UE) to the base station (e.g., the

S-(R)AN) is based on one or more first acknowledgements received from the second wireless device (e.g., the Remote UE).

[0260] In an example, the one or more first acknowledgements of the plurality of downlink data packets may indicate whether the second wireless device has received the plurality of downlink data packets from the first wireless device. In an example, the one or more second acknowledgements of the plurality of downlink data packets may indicate whether the second wireless device and/or the first wireless device has/have received the plurality of downlink data packets from the base station.

[0261] In an example, the first wireless device (e.g., the Relay UE) may receive the first message (e.g., a RRCReconfiguration) from the base station (e.g., the S-(R)AN) during the establishment of the indirect path and/or before the handover. In an example, the first wireless device (e.g., the Relay UE) may receive the first message (e.g., a RRCReconfiguration) from the base station (e.g., the S-(R)AN) during the handover.

[0262] FIG. **26** is an example diagram depicting the first message/RRCReconfiguration message. The first message/RRCReconfiguration message may comprise a parameter sl-ReliableDataRelayIndication indicating reliable downlink data relaying (and/or reliable data relaying). The first message/RRCReconfiguration message may comprise one or more parameters as shown in FIG. **26**.

[0263] In an example, the first message/RRCReconfiguration message may comprise configuration parameters indicating RLC Acknowledged Mode (AM) to perform data transfer of RLC data packets. In an example, the first message/RRCReconfiguration message may comprise configuration parameters indicating RLC AM for the Uu Relay RLC Channel/Uu RLC between the Relay UE and the S-(R)AN as shown in FIG. **18** and/or FIG. **19**. In an example, the first message/RRCReconfiguration message may comprise configuration parameters indicating RLC AM for the PC5 Relay RLC Channel/PC5 RLC between the Relay UE and the Remote UE as shown in FIG. **18** and/or FIG. **19**.

[0264] In an example, the Acknowledged Mode (AM) may indicate a first RLC entity (e.g., RLC entity in a base station) may requires ACK/NACK from a second RLC entity (e.g., RLC entity in a wireless device). In an example, the Acknowledged Mode (AM) may indicate the first wireless device sends an acknowledgement to the base station when receiving a downlink data packet.

[0265] In an example, an RLC entity may be configured to perform data transfer in one of the following three modes: Transparent Mode (TM), Unacknowledged Mode (UM) or Acknowledged Mode (AM). Consequently, an RLC entity may be categorized as a TM RLC entity, an UM RLC entity or an AM RLC entity depending on the mode of data transfer that the RLC entity is configured to provide.

[0266] In an example, an AM RLC entity may comprise a transmitting side and a receiving side. The transmitting side of an AM RLC entity may receive RLC SDUs from upper layer and sends RLC PDUs to its peer AM RLC entity via lower layers. The receiving side of an AM RLC entity may deliver RLC SDUs to upper layer and may receive RLC PDUs from its peer AM RLC entity via lower layers. In an example, the receiving side of an AM RLC entity may send one or more acknowledgements (e.g., ACK/NACK) to the transmitting side of an AM RLC entity indicating whether it has received one or more data packets. In an example, after receiving acknowledgements from receiving side of an AM RLC entity, the transmitting side of an AM RLC entity may indicate to its upper layer that it has successfully delivered upper layers PDCP PDUs.

[0267] In an example, the first message/RRCReconfiguration message may comprise PC5 Relay RLC channel configuration for relay traffic and the associated end-to-end radio bearer(s) between the second wireless device and the base station.

[0268] In an example, the PC5 Relay RLC channel configuration for relay traffic and the associated end-to-end (Uu) radio bearer(s) may comprise mapping information between the PC5 Relay RLC channel and the associated end-to-end (Uu) radio bearer(s). For example, the PC5 Relay RLC channel configuration for relay traffic and the associated end-to-end (Uu) radio bearer(s) may comprise an identity of a PC5 Relay RLC channel, an identity information of associated Remote UE (e.g., Remote UE's local ID) and/or an identity of each of the associated end-to-end (Uu) radio bearer(s) of the Remote UE. In an example, the mapping information between the PC5 Relay RLC channel and the associated end-to-end (Uu) radio bearer(s) may comprise an identity of a PC5 Relay RLC channel, an identity information of associated Remote UE (e.g., Remote UE's local ID) and/or an identity of each of the associated end-to-end (Uu) radio bearer(s) of the Remote UE.

[0269] In an example, based on the PC5 Relay RLC channel configuration for relay traffic and the associated end-to-end (Uu) radio bearer(s), and/or based on the mapping information between the PC5 Relay RLC channel and the associated end-to-end (Uu) radio bearer(s), the Relay UE may map/associate the PC5 Relay RLC channel to each of the associated end-to-end (Uu) radio bearer(s).

[0270] In an example, the end-to-end (Uu) radio bearer(s) may comprise radio bearers for the second wireless device (e.g., the Remote UE). In an example, the end-to-end (Uu) radio bearer(s) may be between the second wireless device (e.g., the Remote UE) and the base station (e.g., the S-(R)AN) via the first wireless device (e.g., the Relay UE). In an example, the end-to-end (Uu) radio bearer(s) may comprise end-to-end (Uu) data radio bearer(s) and/or end-to-end (Uu) signaling radio bearer(s).

[0271] In an example, the PC5 Relay RLC channel may be between the first wireless device (e.g., the Relay UE) and the second wireless device (e.g., the Remote UE). In an example, the PC5 Relay RLC channel may be associated with a PC5 RLC entity of the first wireless device (e.g., the Relay UE) and/or a PC5 RLC entity of the second wireless device (e.g., the Remote UE).

[0272] In an example, the first message/RRCReconfiguration message may comprise a L2 U2N Relay UE ID indicating identity of the first wireless device (e.g., the Relay UE). In an example, the first message/RRCReconfiguration message may comprise a Remote UE's local ID indicating identity of the second wireless device (e.g., the Remote UE).

[0273] In an example, the base station (e.g., the S-(R)AN) may receive a one or more downlink data packets from a UPF, wherein the one or more downlink data packets is associated with (and/or sent to) the second wireless device (e.g., the Remote UE). In an example, the one or more downlink data packets may comprise one or more IP packets (e.g., IP packets (1,2,3,4,5,6,7,8,9)), the S-(R)AN may encapsulate the IP packets into one or more SDAP SDUs/

PDUs (as shown in FIG. **20**) (e.g., SDAP PDUs (1,2,3,4,5,6,7,8,9)) and may send the one or more SDAP SDUs/PDUs to the PDCP entity/layer for further process. In an example, the PDCP entity/layer of the S-(R)AN may encapsulate the received one or more SDAP PDUs into one or more PDCP SDUs/PDUs (e.g., PDCP PDUs (1,2,3,4,5,6,7,8,9)) and send the one or more PDCP SDUs/PDUs to the SRAP entity/layer for further processing.

[0274] In an example, based on the first message/RRCReconfiguration message, based on the PC5 Relay RLC channel configuration for relay traffic and the associated end-to-end (Uu) radio bearer(s), and/or based on the mapping information between the PC5 Relay RLC channel and the associated end-to-end (Uu) radio bearer(s), the SRAP entity/layer of the S-(R)AN may map the one or more PDCP SDUs/PDUs to a PC5 Relay RLC channel and/or an associated end-to-end (Uu) radio bearer of the second wireless device. In an example, based on the mapping, the SRAP entity/layer may encapsulate the one or more PDCP SDUs/PDUs to one or more SRAP SDUs/PDUs (e.g., SRAP PDUs (1,2,3,4,5,6,7,8,9)). The one or more SRAP SDUs/PDUs may comprise at least one of: a SRAP header, the one or more PDCP SDUs/PDUs, the Remote UE's local ID, the identity of a PC5 Relay RLC channel, and/or the identity of the associated end-to-end (Uu) radio bearer(s) of the Remote UE. In an example, the SRAP entity/layer may send the one or more SRAP SDUs/PDUs to the RLC entity/layer. In an example, the RLC entity/layer of the S-(R)AN may encapsulate the one or more SRAP SDUs/PDUs (and/or PDCP SDUs/PDUs) into one or more RLC SDUs/PDUs (e.g., RLC PDUs (1,2,3,4,5,6,7,8,9)). In an example, the RLC entity/layer may segment the SRAP SDUs/PDUs (and/or PDCP SDUs/PDUs) when encapsulating/creating RLC SDUs/PDUs. For example, the RLC entity/layer may segment each of the SRAP SDUs/PDUs (and/or PDCP SDUs/PDUs) into 2 RLC SDUs/PDUs (e.g., RLC PDUs (1-1,1-2,2-1,2-2,3-1,3-2,4-1,4-2,5-1,5-2,6-1,6-2,7-1,7-2,8-1,8-2,9-1,9-2)). In an example, the RLC entity/layer may send the one or more RLC SDUs/PDUs (e.g., RLC PDUs (1,2,3,4,5,6,7,8,9)) to the MAC entity/layer for further processing. The MAC entity/layer of the S-(R)AN may encapsulate the one or more RLC SDUs/PDUs (e.g., RLC PDUs (1,2,3,4,5,6,7,8,9)) into one or more MAC PDUs and may send the one or more MAC PDUs to the PHY entity/layer. The PHY entity/layer of the S-(R)AN may send the one or more MAC PDUs to the first wireless device (e.g., the Relay UE) over the Uu Relay RLC Channel.

[0275] In an example, first wireless device (e.g., the Relay UE) may receive a plurality of downlink data packets from the base station (e.g., the S-(R)AN). In an example, the plurality of downlink data packets may comprise plurality of downlink RLC data packets (e.g., RLC PDUs 1,2,3,5,6) associate with the second wireless device (e.g., the Remote UE). In an example, the plurality of downlink RLC data packets (e.g., RLC PDUs (1,2,3,5,6)) comprises plurality of SRAP PDUs (1,2,3,5,6). In an example, an Uu RLC entity/layer of the Relay UE may send the received plurality of downlink RLC data packets (e.g., RLC PDUs (1,2,3,5,6)) to the SRAP entity/layer of the Relay UE for further processing.

[0276] In an example, based on the PC5 Relay RLC channel configuration for relay traffic and the associated end-to-end (Uu) radio bearer(s), based on the mapping information between the PC5 Relay RLC channel and the associated end-to-end (Uu) radio bearer(s), and/or based on the information of the plurality of SRAP PDUs (1,2,3,5,6) (e.g., header of SRAP, the Remote UE's local ID, the identity of a PC5 Relay RLC channel, and/or the identity of the associated end-to-end (Uu) radio bearer), the SRAP entity/layer of the Relay UE may map the plurality of SRAP PDUs (1,2,3,5,6) to a PC5 Relay RLC channel and/or an associated end-to-end (Uu) radio bearer of the Remote UE. In an example, the SRAP entity/layer of the Relay UE may send/relay/forward the plurality of SRAP PDUs (1,2,3,5,6) to an PC5 RLC entity/layer of the Relay UE, wherein the PC5 RLC entity/layer is associated with the PC5 Relay RLC channel and/or the associated end-to-end (Uu) radio bearer of the Remote UE. The PC5 RLC entity/layer of the Relay UE may encapsulate the one or more plurality of SRAP SDUs/PDUs into plurality of RLC SDUs/PDUs (e.g., RLC PDUs (1,2,3,5,6)). The PC5 RLC entity/layer of the Relay UE may send the plurality of RLC SDUs/PDUs to the MAC entity/layer and/or PHY entity/layer of the Relay UE for further processing. The MAC entity/layer and/or PHY entity/layer of the Relay UE may take the similar actions as described above.

[0277] In an example, the first wireless device (e.g., the Relay UE) may send the plurality of downlink data packets (e.g., the plurality of RLC SDUs/PDUs (e.g., RLC PDUs (1,2,3,5,6)) to the second wireless device (e.g., the Remote UE). For example, the PHY entity/layer of the Relay UE may send the plurality of RLC SDUs/PDUs (e.g., RLC PDUs (1,2,3,5,6)) to the Remote UE via the PC5 Relay RLC channel.

[0278] In an example, based on the first message/RRCReconfiguration message, the first wireless device may determine to wait for at least one acknowledgements of the plurality of downlink data packets from the second wireless device.

[0279] For example, the first message and/or the parameter/Reliable DL Data Relay Indication may indicate a reliable downlink data relaying/forwarding, based on the first message and/or the parameter/Reliable DL Data Relay Indication, the Relay UE may determine to wait for at least one acknowledgement (e.g., RLC acknowledgements) of the plurality of downlink data packets (e.g., downlink RLC PDUs) from the Remote UE.

[0280] For example, the first message and/or the parameter/Reliable DL Data Relay Indication may indicate a reliable downlink data relaying/forwarding, based on the first message and/or the parameter/Reliable DL Data Relay Indication, the Relay UE may determine to wait for at least one first acknowledgements of the plurality of downlink data packets from the Remote UE, before sending one or more second acknowledgements to the S-(R)AN.

[0281] In an example, the second wireless device (e.g., the Remote UE) may receive one or more of the plurality of downlink data packets (e.g., the plurality of RLC SDUs/PDUs (e.g., RLC PDUs (1,2,3,5,6))) from the first wireless device (e.g., the Relay UE). For example, the RLC entity/layer of the Remote UE may receive RLC PDUs (1,2,3) from the Relay UE, where the RLC PDUs (1,2,3) may comprise PDCP PDUs (1,2,3). In an example, the RLC entity/layer of the Remote UE may send the PDCP PDUs (1,2,3) to the PDCP entity/layer of the Remote UE.

[0282] In an example, the second wireless device (e.g., the Remote UE) may have received a message (e.g., RRCReconfiguration) from the base station (e.g., the S-(R)

AN), the RRCReconfiguration message may configure RLC AM for the PC5 Relay RLC Channel and/or end-to-end (Uu) radio bearer(s) associated with the first wireless device (e.g., the Relay UE).

[0283] In an example, based on association between the PC5 Relay RLC channel and end-to-end (Uu) radio bearer (s), the first wireless device may receive one or more first acknowledgements of the plurality of downlink data packets from the second wireless device.

[0284] For example, based on the configuration of RLC AM, based on the mapping information between the PC5 Relay RLC channel and the associated end-to-end (Uu) radio bearer(s), the RLC entity/layer of the Remote UE may send an acknowledgement message (e.g., a first RLC STATUS PDU) to the RLC entity/layer of the Relay UE indicating the Remote UE has received the RLC PDUs (1,2,3) successfully. For example, the RLC entity/layer of the Remote UE may send a first RLC STATUS PDU to the (PC5) RLC entity/layer of the Relay UE over PC5 Relay RLC Channel, wherein the first RLC STATUS PDU may comprise an Acknowledgement Sequence Number (ACK_SN) field, and the ACK_SN field may be set to 4 indicating the Remote UE has received the RLC PDUs (1,2,3) successfully.

[0285] In an example, ACK_SN field may indicate the Sequence Number (SN) of the next not received RLC SDU which is not reported as missing in the STATUS PDU. When the transmitting side of an AM RLC entity receives a STATUS PDU, it interprets that all RLC SDUs up to but not including the RLC SDU with SN=ACK_SN have been received by its peer AM RLC entity, excluding those RLC SDUs indicated in the STATUS PDU with Negative Acknowledgement SN (NACK_SN), portions of RLC SDUs indicated in the STATUS PDU with NACK_SN, SOstart and SOend, RLC SDUs indicated in the STATUS PDU with NACK_SN and NACK_range, and portions of RLC SDUs indicated in the STATUS PDU with NACK_SN, NACK range, SOstart and SOend. In an example, the NACK_SN field may indicate the SN of the RLC SDU (or RLC SDU segment) that has been detected as lost at the receiving side of the AM RLC entity.

[0286] In an example, based on the one or more first acknowledgements, the first wireless device may send one or more second acknowledgements of the plurality of downlink data packets to the base station. For example, based on the first RLC STATUS PDU received from the Remote UE, the Relay UE may send a second RLC STATUS PDU to the S-(R)AN, wherein the second RLC STATUS PDU may comprise an ACK_SN field, and the ACK_SN field may be set to 4 indicating the Relay UE and/or the Remote UE has/have received the RLC PDUs (1,2,3) from the S-(R)AN successfully.

[0287] In an example, each of the one or more second acknowledgements of the plurality of downlink data packets may be associated with each of the plurality of downlink data packets. For example, the second RLC STATUS PDU may be associated with the RLC PDUs (1,2,3) received from the S-(R)AN. In an example, each of the one or more second acknowledgements may indicate each of the plurality of downlink data packets has been received successfully. For example, the second RLC STATUS PDU may indicate that RLC PDUs (1), RLC PDUs (2) and/or RLC PDUs (3) have been received by the Relay UE and/or the Remote UE successfully. In an example, each of the one or more second acknowledgements may indicate each of the plurality of downlink data packets has not been received. For example, the second RLC STATUS PDU may indicate that RLC PDUs (4) has not been received by the Remote UE.

[0288] In an example, in response to the one or more second acknowledgements received, the base station may take one or more actions. For example, the RLC entity/layer of the S-(R)AN may receive the one or more second acknowledgements (e.g., the second RLC STATUS PDU) from the RLC entity/layer of the Relay UE, and the second RLC STATUS PDU may indicate the Relay UE and/or the Remote UE has/have received the RLC PDUs (1,2,3) from the S-(R)AN successfully. In an example, the RLC entity/layer of the S-(R)AN may indicate to the PDCP entity/layer of the S-(R)AN that the PDCP PDUs (1,2,3) have been received by the peer PDCP entity (e.g., PDCP entity of the Remote UE). In an example, the PDCP entity/layer of the S-(R)AN may discard/remove the PDCP PDUs (1,2,3) from the buffer.

[0289] In an example, the S-(R)AN may trigger Uu handover by sending an RRCReconfiguration message to the Remote UE. The RRCReconfiguration message may comprise the information required to access the target cell (e.g., T-(R)AN), e.g., at least the target cell ID, the new Radio Network Temporary Identifier (C-RNTI), and/or the T-(R)AN security algorithm identifiers for the selected security algorithms. In an example, the RRCReconfiguration message may comprise a set of dedicated Random Access Channel (RACH) resources, the association between RACH resources and SSB(s), the association between RACH resources and UE-specific CSI-RS configuration(s), common RACH resources, and/or system information of the target cell, etc.

[0290] In an example, for DRBs configured with DAPS, the S-(R)AN may not stop transmitting downlink packets until it receives the HANDOVER SUCCESS message from the T-(R)AN. In an example, CHO may not be configured simultaneously with DAPS handover. In an example, for DRBs configured with DAPS, the S-(R)AN may send the EARLY STATUS TRANSFER message. The DL COUNT value conveyed in the EARLY STATUS TRANSFER message may indicate PDCP SN and Hyper Frame Number (HFN) of the first PDCP SDU that the S-(R)AN forwards to the T-(R)AN. The S-(R)AN may not stop assigning SNs to downlink PDCP SDUs until it sends the SN STATUS TRANSFER message to the T-(R)AN.

[0291] In an example, for DRBs not configured with DAPS, the S-(R)AN may send SN STATUS TRANSFER message to the T-(R)AN to convey the uplink PDCP SN receiver status and the downlink PDCP SN transmitter status of DRBs for which PDCP status preservation applies (e.g., for RLC AM). The uplink PDCP SN receiver status may comprise at least the PDCP SN of the first missing UL PDCP SDU and may comprise a bit map of the receive status of the out of sequence UL PDCP SDUs that the UE (e.g., Remote UE) needs to retransmit in the target cell, if any. The downlink PDCP SN transmitter status may indicate the next PDCP SN that the T-(R)AN may assign to new PDCP SDUs, not having a PDCP SN yet. In an example, in the SN STATUS TRANSFER message, the downlink PDCP SN transmitter status may indicate the next PDCP SN that the T-(R)AN may assign to new PDCP SDUs is 4, and the downlink PDCP SN transmitter status may indicate downlink PDCP PDUs (1,2,3) have been delivered to the Remote

UE successfully. In an example, in the SN STATUS TRANSFER message, the downlink PDCP SN transmitter status may indicate the next PDCP SN that the T-(R)AN may assign to new PDCP SDUs is 10, and the S-(R)AN may forward undelivered/unreceived PDCP PDUs (4,5,6,7,8,9) to the T-(R)AN.

[0292] In an example, in case of DAPS handover, the uplink PDCP SN receiver status and the downlink PDCP SN transmitter status for a DRB with RLC-AM and not configured with DAPS may be transferred by the SN STATUS TRANSFER message. In an example, for DRBs configured with DAPS, the S-(R)AN may additionally send the EARLY STATUS TRANSFER message(s), to inform discarding of already forwarded PDCP SDUs. The T-(R)AN may not transmit forwarded downlink PDCP SDUs to the Remote UE, whose COUNT is less than the conveyed DL COUNT value and discards them if transmission has not been attempted already.

[0293] In an example, the Remote UE may synchronise to the target cell (e.g., T-(R)AN). In an example, the Remote UE may perform Random Access (RA) procedure to access to the T-(R)AN.

[0294] In an example, the S-(R)AN may forward undelivered/unreceived PDCP PDUs (4,5,6,7,8,9) to the T-(R)AN.

[0295] In an example, the Remote UE may complete the RRC handover procedure by sending RRCReconfiguration-Complete message to the T-(R)AN. In case of DAPS handover, the Remote UE may not detach from the source cell (e.g., S-(R)AN) upon receiving the RRCReconfiguration message. The Remote UE may release the source resources and configurations and stops DL/UL reception/transmission with the source upon receiving an explicit release from the target node (e.g., T-(R)AN).

[0296] In an example, in case of DAPS handover, the T-(R)AN may send the HANDOVER SUCCESS message to the S-(R)AN to inform that the UE has successfully accessed the target cell. In return, the S-(R)AN may send the SN STATUS TRANSFER message for DRBs configured with DAPS. In an example, for DRBs configured with DAPS, the S-(R)AN may not stop delivering uplink QoS flows to the UPF until it sends the SN STATUS TRANSFER message to the T-(R)AN. The T-(R)AN may not forward QoS flows of the uplink PDCP SDUs successfully received in-sequence to the UPF until it receives the SN STATUS TRANSFER message, in which UL HFN and the first missing SN in the uplink PDCP SN receiver status indicates the start of uplink PDCP SDUs to be delivered to the UPF. The T-(R)AN may not deliver any uplink PDCP SDUs which has an UL COUNT lower than the provided.

[0297] In an example, the T-(R)AN may send a PATH SWITCH REQUEST message to an AMF to trigger 5GC to switch the DL data path towards the T-(R)AN and to establish an NG-C interface instance towards the T-(R)AN. In an example, the 5GC may switch the DL data path towards the T-(R)AN. The UPF may send one or more "end marker" packets on the old path to the S-(R)AN per PDU session/tunnel and then can release any U-plane/TNL resources towards the S-(R)AN. In an example, the AMF may confirm the PATH SWITCH REQUEST message with the PATH SWITCH REQUEST ACKNOWLEDGE message.

[0298] Upon reception of the PATH SWITCH REQUEST ACKNOWLEDGE message from the AMF, the T-(R)AN may send UE CONTEXT RELEASE to inform the S-(R)AN about the success of the handover. The S-(R)AN may release radio and C-plane related resources associated to the Remote UE context. Any ongoing data forwarding may continue.

[0299] In an example, the T-(R)AN may send a RRCReconfiguration message to the Relay UE to reconfigure the connection between the Relay UE and the S-(R)AN. The RRCReconfiguration message may indicate the Relay UE to release Uu and PC5 Relay RLC channel configuration for relaying, and bearer mapping configuration related to the Remote UE. In an example, either Relay UE or Remote UE's AS layer may release PC5-RRC connection and may indicate upper layers to release PC5 unicast link after receiving the RRCReconfiguration message from the T-(R)AN. The timing to execute link release is up to UE implementation.

[0300] In an example, after receiving the forwarded PDCP PDUs (4,5,6,7,8,9) from the S-(R)AN, the T-(R)AN may send the PDCP PDUs (4,5,6,7,8,9) to the Remote UE.

[0301] FIG. **27** is an example diagram depicting the procedures of a Relay UE as per an aspect of an embodiment of the present disclosure.

[0302] FIG. **28** is an example call flow which may comprise one or more actions. In an example, by using the procedure(s) specified in FIG. **21** and/or in FIG. **22**, a Remote UE may establish an indirect path with a base station (e.g., a source base station, S-(R)AN) via a Relay UE. The Remote UE may send/receive uplink (UL)/downlink (DL) data to/from the S-(R)AN via the indirect path.

[0303] In an example, the S-(R)AN may configure the Remote UE to measure radio link signal of Uu interface between the Remote UE and the S-(R)AN for direct path. In an example, the S-(R)AN may configure the Remote UE to measure sidelink signal of PC5 interface for one or more Relay UEs. In an example, the Remote UE may send a measurement report to the S-(R)AN when configured measurement reporting criteria are met. In an example, The Remote UE may report Uu measurements results of Uu interface and/or one or multiple candidate Relay UE(s). In an example, the Remote UE may filter the appropriate Relay UE(s) according to relay selection/reselection criteria before reporting. The Remote UE may report the Relay UE candidate(s) that fulfil the higher layer criteria. In an example, the measurement reports may comprise at least a Relay UE ID, a Relay UE's serving cell ID, and/or a sidelink measurement quantity information. In an example, Sidelink Discovery Reference Signal Received Power (SD-RSRP) may be used as sidelink measurement quantity. In an example, the SD-RSRP may be defined as linear average over the power contributions of the resource elements that carry demodulation reference signals associated with PSDCH for which CRC has been validated. The reference point for the SD-RSRP may be the antenna connector of the UE. If receiver diversity is in use by the UE, the reported value may not be lower than the corresponding SD-RSRP of any of the individual diversity branches.

[0304] In an example, based on the measurement report and/or RRM information, the S-(R)AN may determine handover the Remote UE to a target base station (e.g., T-(R)AN) via a direct path.

[0305] In an example, the S-(R)AN may issue/transmit a Handover Request message to the T-(R)AN. In an example, the Handover Request message may comprise a transparent RRC container with necessary information to prepare the handover at the T-(R)AN. In an example, the Handover

Request message may comprise at least one of: the target cell ID, KgNB*, the C-RNTI of the Remote UE in the S-(R)AN, RRM configuration including Remote UE inactive time, basic AS-configuration including antenna Info and DL Carrier Frequency, the current QoS flow to DRB mapping rules applied to the Remote UE, the SIB1 from S-(R)AN, the Remote UE capabilities for different RATs, PDU session related information, and/or measurement report information including beam-related information if available. The PDU session related information may comprise the slice information and QoS flow level QoS profile(s). In an example, the S-(R)AN may also request a Dual Active Protocol Stack (DAPS) handover for one or more DRBs. In an example, the DAPS handover may allow a wireless device to receive and transmit data simultaneously to source cell and target cell in a handover ensuring seamless data continuity. In an example, after transmitting a Handover Request message, the S-(R)AN may not reconfigure the Remote UE to perform Reflective QoS flow to DRB mapping.

[0306] In an example, the T-(R)AN may perform admission control. In an example, the T-(R)AN may perform network slice-aware admission control if the network slice information is received from the S-(R)AN. In an example, if the PDU sessions are associated with non-supported network slices, the T-(R)AN may reject such PDU Sessions. In an example, the T-(R)AN may prepare the handover with layer 1 (L1)/layer 2 (L2). In an example, the T-(R)AN may send a Handover Request Acknowledge message to the S-(R)AN. The Handover Request Acknowledge message may comprise a transparent container to be sent to the Remote UE as an RRC message to perform the handover. The T-(R)AN may indicate if a DAPS handover is accepted or not by the T-(R)AN.

[0307] In an example, as soon as the S-(R)AN receives the Handover Request Acknowledge message, or as soon as the transmission of the handover command is initiated in the downlink, the S-(R)AN may perform data forwarding by forwarding downlink data packets to the T-(R)AN. In an example, for DRBs configured with DAPS, downlink PDCP SDUs may be forwarded with SN assigned by the S-(R)AN, until SN assignment is handed over to the T-(R)AN.

[0308] In an example, a first wireless device (e.g., the Relay UE) may receive a first message (e.g., a RRCReconfiguration, MIB, SIB) from a base station (e.g., the S-(R)AN). In an example, the first wireless device (e.g., the Relay UE) may receive the first message (e.g., a RRCReconfiguration, MIB, SIB) from the base station (e.g., the S-(R)AN) during the establishment of the indirect path and/or before the handover. In an example, the first wireless device (e.g., the Relay UE) may receive the first message (e.g., a RRCReconfiguration, MIB, SIB) from the base station (e.g., the S-(R)AN) during the handover.

[0309] In an example, the first message/RRCReconfiguration message may comprise configuration parameters indicating RLC Acknowledged Mode (AM) to perform data transfer of RLC data packets. In an example, the first message/RRCReconfiguration message may comprise configuration parameters indicating RLC AM for the Uu Relay RLC Channel/Uu RLC between the Relay UE and the S-(R)AN as shown in FIG. **18** and/or FIG. **19**. In an example, the first message/RRCReconfiguration message may comprise configuration parameters indicating RLC AM for the PC5 Relay RLC Channel/PC5 RLC between the Relay UE and the Remote UE as shown in FIG. **18** and/or FIG. **19**.

[0310] In an example, the definition/content of the RLC AM may be similar to (and/or the same as) the definition/content of the RLC AM as described in FIG. **25**.

[0311] In an example, the first message/RRCReconfiguration message may comprise PC5 Relay RLC channel configuration for relay traffic and the associated end-to-end radio bearer(s) between the second wireless device and the base station as described in FIG. **25**.

[0312] In an example, the first message/RRCReconfiguration message may comprise a L2 U2N Relay UE ID indicating identity of the first wireless device (e.g., the Relay UE). In an example, the first message/RRCReconfiguration message may comprise a Remote UE's local ID indicating identity of the second wireless device (e.g., the Remote UE).

[0313] In an example, the base station (e.g., the S-(R)AN) may receive a one or more downlink data packets from a UPF, wherein the one or more downlink data packets is associated with (and/or sent to) the second wireless device (e.g., the Remote UE). In an example, the one or more downlink data packets may comprise one or more IP packets (e.g., IP packets (1,2,3,4,5,6,7,8,9)), the S-(R)AN may encapsulate the IP packets into one or more SDAP SDUs/PDUs (as shown in FIG. **20**) (e.g., SDAP PDUs (1,2,3,4,5,6,7,8,9)) and may send the one or more SDAP SDUs/PDUs to the PDCP entity/layer for further process. In an example, the PDCP entity/layer of the S-(R)AN may encapsulate the received one or more SDAP PDUs into one or more PDCP SDUs/PDUs (e.g., PDCP PDUs (1,2,3,4,5,6,7,8,9)) and send the one or more PDCP SDUs/PDUs to the SRAP entity/layer for further processing.

[0314] In an example, based on the first message/RRCReconfiguration message, based on the PC5 Relay RLC channel configuration for relay traffic and the associated end-to-end (Uu) radio bearer(s), and/or based on the mapping information between the PC5 Relay RLC channel and the associated end-to-end (Uu) radio bearer(s), the SRAP entity/layer of the S-(R)AN may map the one or more PDCP SDUs/PDUs to a PC5 Relay RLC channel and/or an associated end-to-end (Uu) radio bearer of the second wireless device. In an example, based on the mapping, the SRAP entity/layer may encapsulate the one or more PDCP SDUs/PDUs to one or more SRAP SDUs/PDUs (e.g., SRAP PDUs (1,2,3,4,5,6,7,8,9)). The one or more SRAP SDUs/PDUs may comprise at least one of: a header of SRAP, the one or more PDCP SDUs/PDUs, the Remote UE's local ID, the identity of a PC5 Relay RLC channel, and/or the identity of the associated end-to-end (Uu) radio bearer(s). In an example, the SRAP entity/layer may send the one or more SRAP SDUs/PDUs to the RLC entity/layer. In an example, the RLC entity/layer of the S-(R)AN may encapsulate the one or more SRAP SDUs/PDUs (and/or PDCP SDUs/PDUs) into one or more RLC SDUs/PDUs (e.g., RLC PDUs (1,2,3,4,5,6,7,8,9)). In an example, the RLC entity/layer may segment the SRAP SDUs/PDUs (and/or PDCP SDUs/PDUs) when encapsulating/creating RLC SDUs/PDUs. For example, the RLC entity/layer may segment each of the SRAP SDUs/PDUs (and/or PDCP SDUs/PDUs) into 2 RLC SDUs/PDUs (e.g., RLC PDUs (1-1,1-2,2-1,2-2,3-1,3-2,4-1,4-2,5-1,5-2,6-1,6-2,7-1,7-2,8-1,8-2,9-1,9-2)). In an example, the RLC entity/layer may send the one or more RLC SDUs/PDUs (e.g., RLC PDUs (1,2,3,4,5,6,7,8,9)) to

the MAC entity/layer for further processing. The MAC entity/layer of the S-(R)AN may encapsulate the one or more RLC SDUs/PDUs (e.g., RLC PDUs (1,2,3,4,5,6,7,8, 9)) into one or more MAC PDUs and may send the one or more MAC PDUs to the PHY entity/layer. The PHY entity/layer of the S-(R)AN may send the one or more MAC PDUs to the first wireless device (e.g., the Relay UE) over the Uu Relay RLC Channel.

[0315] In an example, first wireless device (e.g., the Relay UE) may receive a plurality of downlink data packets from the base station (e.g., the S-(R)AN). In an example, the plurality of downlink data packets may comprise plurality of downlink RLC data packets (e.g., RLC PDUs 1,2,3,5,6) associate with the second wireless device (e.g., the Remote UE). In an example, the plurality of downlink RLC data packets (e.g., RLC PDUs 1,2,3,5,6) comprises plurality of SRAP PDUs (1,2,3,5,6). In an example, an Uu RLC entity/layer of the Relay UE may send the received plurality of downlink RLC data packets (e.g., RLC PDUs 1,2,3,5,6) to the SRAP entity/layer of the Relay UE for further processing.

[0316] In an example, based on the PC5 Relay RLC channel configuration for relay traffic and the associated end-to-end (Uu) radio bearer(s), based on the mapping information between the PC5 Relay RLC channel and the associated end-to-end (Uu) radio bearer(s), and/or based on the information of the plurality of SRAP PDUs (1,2,3,5,6) (e.g., header of SRAP, the Remote UE's local ID, the identity of a PC5 Relay RLC channel, and/or the identity of the associated end-to-end (Uu) radio bearer), the SRAP entity/layer of the Relay UE may map the plurality of SRAP PDUs (1,2,3,5,6) to a PC5 Relay RLC channel and/or an associated end-to-end (Uu) radio bearer of the Remote UE. In an example, the SRAP entity/layer of the Relay UE may send/relay/forward the plurality of SRAP PDUs (1,2,3,5,6) to an PC5 RLC entity/layer of the Relay UE, wherein the PC5 RLC entity/layer is associated with the PC5 Relay RLC channel and/or the associated end-to-end (Uu) radio bearer of the Remote UE. The PC5 RLC entity/layer of the Relay UE may encapsulate the one or more plurality of SRAP SDUs/PDUs into plurality of RLC SDUs/PDUs (e.g., RLC PDUs (1,2,3,5,6)). The PC5 RLC entity/layer of the Relay UE may send the plurality of RLC SDUs/PDUs to the MAC entity/layer and/or PHY entity/layer of the Relay UE for further processing. The MAC entity/layer and/or PHY entity/layer of the Relay UE may take the similar actions as described above.

[0317] In an example, the first wireless device (e.g., the Relay UE) may send the plurality of downlink data packets (e.g., the plurality of RLC SDUs/PDUs (e.g., RLC PDUs (1,2,3,5,6))) to the second wireless device (e.g., the Remote UE). For example, the PHY entity/layer of the Relay UE may send the plurality of RLC SDUs/PDUs (e.g., RLC PDUs (1,2,3,5,6)) to the Remote UE via the PC5 Relay RLC channel.

[0318] In an example, the first wireless device may transmit acknowledgements of the plurality of downlink data packets to the base station. For example, the Relay UE may send an acknowledgement message (e.g., a RLC STATUS PDU) to the S-(R)AN, wherein the RLC STATUS PDU may comprise an ACK_SN field setting to 7, and/or a NACK_SN field setting to 4, indicating the Relay UE has received the RLC PDUs (1,2,3,5,6) from the S-(R)AN successfully.

[0319] In an example, the second wireless device (e.g., the Remote UE) may receive one or more of the plurality of downlink data packets (e.g., the plurality of RLC SDUs/PDUs (e.g., RLC PDUs (1,2,3,5,6))) from the first wireless device (e.g., the Relay UE). For example, the RLC entity/layer of the Remote UE may receive RLC PDUs (1,2,3) from the Relay UE, where the RLC PDUs (1,2,3) may comprise PDCP PDUs (1,2,3). In an example, the RLC entity/layer of the Remote UE may send the PDCP PDUs (1,2,3) to the PDCP entity/layer of the Remote UE.

[0320] In an example, the second wireless device (e.g., the Remote UE) may have received a message (e.g., RRCReconfiguration) from the base station (e.g., the S-(R)AN), the RRCReconfiguration message may configure RLC AM for the PC5 Relay RLC Channel and/or end-to-end (Uu) radio bearer(s) associated with the first wireless device (e.g., the Relay UE).

[0321] In an example, the first wireless device may receive one or more acknowledgements of the plurality of downlink data packets from the second wireless device. For example, based on the configuration of RLC AM, based on the mapping information between the PC5 Relay RLC channel and the associated end-to-end (Uu) radio bearer(s), the RLC entity/layer of the Remote UE may send an acknowledgement message (e.g., a RLC STATUS PDU) to the RLC entity/layer of the Relay UE indicating the Remote UE has received the RLC PDUs (1,2,3) successfully. For example, the RLC entity/layer of the Remote UE may send a RLC STATUS PDU to the (PC5) RLC entity/layer of the Relay UE over PC5 Relay RLC Channel, wherein the RLC STATUS PDU may comprise an ACK_SN field setting to 4 indicating the Remote UE has received the RLC PDUs (1,2,3) successfully.

[0322] In an example, the first wireless device may receive a message (e.g., RLC Unack Query) from the base station, the RLC Unack Query message may query the first wireless device that downlink data packets have not been acknowledged by the second wireless device. For example, the S-(R)AN may send the RLC Unack Query message to the Relay UE querying which downlink data packets have not been acknowledged/received by the Remote UE. In an example, the RLC Unack Query message may comprise a parameter (e.g., Query Unacked RLC) query the first wireless device that downlink data packets have not been acknowledged/received by the second wireless device.

[0323] In an example, in response to the message received from the base station, based on the RLC Unack Query message and/or the parameter/Query Unacked RLC, the first wireless device may send a message (e.g., Un-Acked DL data Report) to the base station, the Un-Acked DL data Report message may indicate at least one downlink data packets have not been acknowledged/received by the second wireless device. In an example, the Un-Acked DL data Report message may comprise the at least one downlink data packets. For example, the Relay UE may send the Un-Acked DL data Report message to the S-(R)AN indicating that RLC PDUs (5,6) have not been received/acknowledged by the Remote UE. In an example, the Un-Acked DL data Report message may comprise the undelivered/unacknowledged RLC PDUs (e.g., RLC PDUs (5,6)) which have not been received/acknowledged by the Remote UE, to enable the S-(R)AN to forward them to the T-(R)AN during the handover.

[0324] In an example, in response to the acknowledgements of the plurality of downlink data packets received from the Relay UE and/or in response to the Un-Acked DL data Report message, the base station may take one or more actions. For example, the RLC entity/layer of the S-(R)AN may receive the acknowledgements (e.g., the RLC STATUS PDU) from the RLC entity/layer of the Relay UE indicating RLC PDUs (1,2,3,5,6) have been received by the Relay UE, and/or the RLC entity/layer of the S-(R)AN may receive Un-Acked DL data Report message indicating RLC PDUs (5,6) have not been received/acknowledged by the Remote UE, based on above messages, the RLC entity/layer of the S-(R)AN may indicate to the PDCP entity/layer of the S-(R)AN that the PDCP PDUs (1,2,3) have been received by the peer PDCP entity (e.g., PDCP entity of the Remote UE). In an example, the PDCP entity/layer of the S-(R)AN may discard/remove the PDCP PDUs (1,2,3) from the buffer.

[0325] In an example, after receiving the undelivered/unacknowledged RLC PDUs (e.g., RLC PDUs (5,6)) which have not been received/acknowledged by the Remote UE, the RLC entity/layer of the S-(R)AN may decapsulate the undelivered/unacknowledged RLC PDUs (5,6) to undelivered/unacknowledged PDCP PDUs. For example, the RLC PDUs (5,6) may comprise undelivered/unacknowledged PDCP PDUs (5,6). In an example, the RLC entity/layer of the S-(R)AN may send the undelivered/unacknowledged PDCP PDUs (5,6) to the PDCP entity/layer of the S-(R)AN.

[0326] In an example, the S-(R)AN may trigger Uu handover by sending an RRCReconfiguration message to the UE, containing the information required to access the target cell (e.g., T-(R)AN): at least the target cell ID, the new Radio Network Temporary Identifier (C-RNTI), the T-(R)AN security algorithm identifiers for the selected security algorithms. In an example, the RRCReconfiguration message may comprise a set of dedicated Random Access Channel (RACH) resources, the association between RACH resources and SSB(s), the association between RACH resources and UE-specific CSI-RS configuration(s), common RACH resources, and/or system information of the target cell, etc.

[0327] In an example, for DRBs configured with DAPS, the S-(R)AN may not stop transmitting downlink packets until it receives the HANDOVER SUCCESS message from the T-(R)AN. In an example, CHO may not be configured simultaneously with DAPS handover. In an example, for DRBs configured with DAPS, the S-(R)AN may send the EARLY STATUS TRANSFER message. The DL COUNT value conveyed in the EARLY STATUS TRANSFER message may indicate PDCP SN and Hyper Frame Number (HFN) of the first PDCP SDU that the S-(R)AN forwards to the T-(R)AN. The S-(R)AN may not stop assigning SNs to downlink PDCP SDUs until it sends the SN STATUS TRANSFER message to the T-(R)AN.

[0328] In an example, for DRBs not configured with DAPS, the S-(R)AN may send SN STATUS TRANSFER message to the T-(R)AN to convey the uplink PDCP SN receiver status and the downlink PDCP SN transmitter status of DRBs for which PDCP status preservation applies (e.g., for RLC AM). The uplink PDCP SN receiver status may comprise at least the PDCP SN of the first missing UL PDCP SDU and may comprise a bit map of the receive status of the out of sequence UL PDCP SDUs that the UE (e.g., Remote UE) needs to retransmit in the target cell, if any. The downlink PDCP SN transmitter status may indicate the next PDCP SN that the T-(R)AN may assign to new PDCP SDUs, not having a PDCP SN yet. In an example, in the SN STATUS TRANSFER message, the downlink PDCP SN transmitter status may indicate the next PDCP SN that the T-(R)AN may assign to new PDCP SDUs is 4, which may indicate downlink PDCP PDUs (1,2,3) have been delivered to the Remote UE successfully. In an example, in the SN STATUS TRANSFER message, the downlink PDCP SN transmitter status may indicate the next PDCP SN that the T-(R)AN may assign to new PDCP SDUs is 10, and the S-(R)AN may forward undelivered/unreceived/unacknowledged PDCP PDUs (4,5,6,7,8,9) to the T-(R)AN.

[0329] In an example, in case of DAPS handover, the uplink PDCP SN receiver status and the downlink PDCP SN transmitter status for a DRB with RLC-AM and not configured with DAPS may be transferred by the SN STATUS TRANSFER message. In an example, for DRBs configured with DAPS, the S-(R)AN may additionally send the EARLY STATUS TRANSFER message(s), to inform discarding of already forwarded PDCP SDUs. The T-(R)AN may not transmit forwarded downlink PDCP SDUs to the Remote UE, whose COUNT is less than the conveyed DL COUNT value and discards them if transmission has not been attempted already.

[0330] In an example, the Remote UE may synchronise to the target cell (e.g., T-(R)AN). In an example, the Remote UE may perform Random Access (RA) procedure to access to the T-(R)AN.

[0331] In an example, the S-(R)AN may forward undelivered/unreceived/unacknowledged PDCP PDUs (4,5,6,7,8,9) to the T-(R)AN.

[0332] In an example, the Remote UE may complete the RRC handover procedure by sending RRCReconfigurationComplete message to the T-(R)AN. In case of DAPS handover, the Remote UE may not detach from the source cell (e.g., S-(R)AN) upon receiving the RRCReconfiguration message. The Remote UE may release the source resources and configurations and stops DL/UL reception/transmission with the source upon receiving an explicit release from the target node (e.g., T-(R)AN).

[0333] In an example, in case of DAPS handover, the T-(R)AN may send the HANDOVER SUCCESS message to the S-(R)AN to inform that the UE has successfully accessed the target cell. In return, the S-(R)AN may send the SN STATUS TRANSFER message for DRBs configured with DAPS. In an example, for DRBs configured with DAPS, the S-(R)AN may not stop delivering uplink QoS flows to the UPF until it sends the SN STATUS TRANSFER message to the T-(R)AN. The T-(R)AN may not forward QoS flows of the uplink PDCP SDUs successfully received in-sequence to the UPF until it receives the SN STATUS TRANSFER message, in which UL HFN and the first missing SN in the uplink PDCP SN receiver status indicates the start of uplink PDCP SDUs to be delivered to the UPF. The T-(R)AN may not deliver any uplink PDCP SDUs which has an UL COUNT lower than the provided.

[0334] In an example, the T-(R)AN may send a PATH SWITCH REQUEST message to an AMF to trigger 5GC to switch the DL data path towards the T-(R)AN and to establish an NG-C interface instance towards the T-(R)AN. In an example, the 5GC may switch the DL data path towards the T-(R)AN. The UPF may send one or more "end marker" packets on the old path to the S-(R)AN per PDU session/tunnel and then can release any U-plane/TNL resources towards the S-(R)AN. In an example, the AMF

may confirm the PATH SWITCH REQUEST message with the PATH SWITCH REQUEST ACKNOWLEDGE message.

[0335] Upon reception of the PATH SWITCH REQUEST ACKNOWLEDGE message from the AMF, the T-(R)AN may send UE CONTEXT RELEASE to inform the S-(R)AN about the success of the handover. The S-(R)AN may release radio and C-plane related resources associated to the Remote UE context. Any ongoing data forwarding may continue.

[0336] In an example, the T-(R)AN may send a RRCReconfiguration message to the Relay UE to reconfigure the connection between the Relay UE and the S-(R)AN. The RRCReconfiguration message may indicate the Relay UE to release Uu and PC5 Relay RLC channel configuration for relaying, and bearer mapping configuration related to the Remote UE. In an example, either Relay UE or Remote UE's AS layer may release PC5-RRC connection and may indicate upper layers to release PC5 unicast link after receiving the RRCReconfiguration message from the T-(R)AN. The timing to execute link release is up to UE implementation.

[0337] In an example, after receiving the undelivered/unreceived/unacknowledged PDCP PDUs PDCP PDUs (4,5,6,7,8,9) from the S-(R)AN, the T-(R)AN may send them to the Remote UE.

[0338] In existing technologies, after receiving Handover Request Acknowledge message, the S-(R)AN may perform data forwarding by forwarding downlink data packets (1,2,3,4,5,6,7,8,9) to the T-(R)AN. The S-(R)AN may send the downlink PDCP SN transmitter status to the T-(R)AN in a SN STATUS TRANSFER message, where the downlink PDCP SN transmitter status may indicate a next PDCP SN (e.g., 7) that the T-(R)AN may assign to new PDCP SDUs. For example, the PDCP SN (e.g., 7) may indicate the Remote UE has received PDCP PDU (1,2,3,4,5,6) successfully. The T-(R)AN may forward the downlink data packets to the Remote UE based on the downlink PDCP SN transmitter status, e.g., even the T-(R)AN received the downlink data packets (1,2,3,4,5,6,7,8,9), it may forward the downlink data packets (7,8,9) to the Remote UE.

[0339] However, as shown in FIG. **23** and FIG. **24**, the downlink PDCP SN transmitter status is based on the acknowledgements of Relay UE and may not consider whether the downlink data packets have been received by the Remote UE successfully, consequently, some downlink data packets (e.g., PDCP PDU (5,6)) may be lost.

[0340] Example embodiments provide enhanced mechanisms to avoid losing of downlink data packet during a handover. Example embodiments provide enhanced mechanisms to enable a first base station buffering all downlink data packets and forward all downlink data packets to a second base station during a handover. Example embodiments provide enhanced mechanisms to enable a first base station sending downlink PDCP SN transmitter status to a second base station, wherein the downlink PDCP SN transmitter status is based on first downlink data packets of the all the downlink data packets. Consequently, all the downlink data packets (e.g., PDCP PDUs) will be transmitted by the second base station and/or the first base station successfully. No downlink data packets will be lost during the handover.

[0341] FIG. **29** is an example call flow which may comprise one or more actions. In an example, by using the procedure(s) specified in FIG. **21** and/or in FIG. **22**, a Remote UE may establish an indirect path with a base station (e.g., a source base station, S-(R)AN) via a Relay UE. The Remote UE may send/receive uplink (UL)/downlink (DL) data to/from the S-(R)AN via the indirect path.

[0342] In an example, the S-(R)AN may receive a message (e.g., Initial Context Setup, NG Setup Response) from a network function (e.g., AMF, OAM, NWDAF) indicating a reliable downlink data relaying. In an example, the message/Initial Context Setup message may comprise a parameter (e.g., Reliable DL Data Relay Indication, Lossless Path Switch Indication) indicating a reliable downlink data relaying/transmitting for one or more second wireless devices (e.g., the Remote UE). In an example, the message/Initial Context Setup message and/or the parameter (e.g., Reliable DL Data Relay Indication, Lossless Path Switch Indication) may indicate reliable data relaying/forwarding/transmitting.

[0343] In an example, the reliable downlink data relaying (and/or reliable data relaying/forwarding/transmitting) may indicate that the base station (e.g., the S-(R)AN) may send a plurality of downlink data packets to a second wireless device (e.g., the Remote UE) via a first wireless device (e.g., the Relay UE) over an indirect path without losing at least one of the plurality of downlink data packets.

[0344] In an example, the reliable downlink data relaying (and/or reliable data relaying/forwarding/transmitting) may indicate that the base station (e.g., the S-(R)AN) may send a plurality of downlink data packets to a second wireless device (e.g., the Remote UE) via a first wireless device (e.g., the Relay UE) over an indirect path with a configured number of downlink data packets lost during the relaying/forwarding because of handover. For example, reliable downlink data relaying (and/or reliable data relaying/forwarding/transmitting) may indicate packet loss rate is lower than a configured number (e.g., 0.01%) (e.g., during a handover). In an example, the packet loss rate may indicate data packets that could not be received by a target (e.g., Remote UE) comprising packets dropped, packets lost in transmission and/or packets received in wrong format.

[0345] In an example, the reliable downlink data relaying (and/or reliable data relaying/forwarding/transmitting) may indicate a lossless path switching (e.g., from indirect path to direct path) and/or a lossless handover.

[0346] In an example, the S-(R)AN may configure the Remote UE to measure radio link signal of Uu interface between the Remote UE and the S-(R)AN for direct path. In an example, the S-(R)AN may configure the Remote UE to measure sidelink signal of PC5 interface for one or more Relay UEs. In an example, the Remote UE may send a measurement report to the S-(R)AN when configured measurement reporting criteria are met. In an example, The Remote UE may report Uu measurements results of Uu interface and/or one or multiple candidate Relay UE(s). In an example, the Remote UE may filter the appropriate Relay UE(s) according to relay selection/reselection criteria before reporting. The Remote UE may report the Relay UE candidate(s) that fulfil the higher layer criteria. In an example, the measurement reports may comprise at least a Relay UE ID, a Relay UE's serving cell ID, and/or a sidelink measurement quantity information. In an example, Sidelink Discovery Reference Signal Received Power (SD-RSRP) may be used as sidelink measurement quantity. In an example, the SD-RSRP may be defined as linear average over the power contributions of the resource elements that carry demodulation reference signals associated with PSDCH for which CRC has been validated. The reference

point for the SD-RSRP may be the antenna connector of the UE. If receiver diversity is in use by the UE, the reported value may not be lower than the corresponding SD-RSRP of any of the individual diversity branches.

[0347] In an example, based on the measurement report and/or RRM information, the S-(R)AN may determine handover the Remote UE to a target base station (e.g., T-(R)AN) via a direct path.

[0348] In an example, the S-(R)AN may issue/transmit a Handover Request message to the T-(R)AN. In an example, the Handover Request message may comprise a transparent RRC container with necessary information to prepare the handover at the T-(R)AN. In an example, the Handover Request message may comprise at least one of: the target cell ID, KgNB*, the C-RNTI of the Remote UE in the S-(R)AN, RRM configuration including Remote UE inactive time, basic AS-configuration including antenna Info and DL Carrier Frequency, the current QoS flow to DRB mapping rules applied to the Remote UE, the SIB1 from S-(R)AN, the Remote UE capabilities for different RATs, PDU session related information, and/or measurement report information including beam-related information if available. The PDU session related information may comprise the slice information and QoS flow level QoS profile(s). In an example, the S-(R)AN may also request a Dual Active Protocol Stack (DAPS) handover for one or more DRBs. In an example, the DAPS handover may allow a wireless device to receive and transmit data simultaneously to source cell and target cell in a handover ensuring seamless data continuity. In an example, after transmitting a Handover Request message, the S-(R)AN may not reconfigure the Remote UE to perform Reflective QoS flow to DRB mapping.

[0349] In an example, the T-(R)AN may perform admission control. In an example, the T-(R)AN may perform network slice-aware admission control if the network slice information is received from the S-(R)AN. In an example, if the PDU sessions are associated with non-supported network slices, the T-(R)AN may reject such PDU Sessions. In an example, the T-(R)AN may prepare the handover with layer 1 (L1)/layer 2 (L2). In an example, the T-(R)AN may send a Handover Request Acknowledge message to the S-(R)AN. The Handover Request Acknowledge message may comprise a transparent container to be sent to the Remote UE as an RRC message to perform the handover. The T-(R)AN may indicate if a DAPS handover is accepted or not by the T-(R)AN.

[0350] In an example, as soon as the S-(R)AN receives the Handover Request Acknowledge message, or as soon as the transmission of the handover command is initiated in the downlink, the S-(R)AN may perform data forwarding by forwarding downlink data packets to the T-(R)AN. In an example, for DRBs configured with DAPS, downlink PDCP SDUs may be forwarded with SN assigned by the S-(R)AN, until SN assignment is handed over to the T-(R)AN.

[0351] In an example, a first wireless device (e.g., the Relay UE) may receive a first message (e.g., a RRCReconfiguration, MIB, SIB) from a base station (e.g., the S-(R)AN). In an example, the first wireless device (e.g., the Relay UE) may receive the first message (e.g., a RRCReconfiguration, MIB, SIB) from the base station (e.g., the S-(R)AN) during the establishment of the indirect path and/or before the handover. In an example, the first wireless device (e.g., the Relay UE) may receive the first message (e.g., a RRCReconfiguration, MIB, SIB) from the base station (e.g., the S-(R)AN) during the handover.

[0352] In an example, the first message/RRCReconfiguration message may comprise configuration parameters indicating RLC Acknowledged Mode (AM) to perform data transfer of RLC data packets. In an example, the first message/RRCReconfiguration message may comprise configuration parameters indicating RLC AM for the Uu Relay RLC Channel/Uu RLC between the Relay UE and the S-(R)AN as shown in FIG. **18** and/or FIG. **19**. In an example, the first message/RRCReconfiguration message may comprise configuration parameters indicating RLC AM for the PC5 Relay RLC Channel/PC5 RLC between the Relay UE and the Remote UE as shown in FIG. **18** and/or FIG. **19**.

[0353] In an example, the definition/content of the RLC AM may be similar to (and/or the same as) the definition/content of the RLC AM as described in FIG. **25**.

[0354] In an example, the first message/RRCReconfiguration message may comprise PC5 Relay RLC channel configuration for relay traffic and the associated end-to-end radio bearer(s) between the second wireless device and the base station as described in FIG. **25**.

[0355] In an example, the first message/RRCReconfiguration message may comprise a L2 U2N Relay UE ID indicating identity of the first wireless device (e.g., the Relay UE). In an example, the first message/RRCReconfiguration message may comprise a Remote UE's local ID indicating identity of the second wireless device (e.g., the Remote UE).

[0356] In an example, the base station (e.g., the S-(R)AN) may receive a one or more downlink data packets from a UPF, wherein the one or more downlink data packets is associated with (and/or sent to) the second wireless device (e.g., the Remote UE).

[0357] In an example, based on the message received from the network function, the first base station may determine to buffer all downlink data packets associated with the second wireless device during the handover. For example, based on the message/Initial Context Setup message and/or the parameter (e.g., Reliable DL Data Relay Indication, Lossless Path Switch Indication), the S-(R)AN may determine to buffer all downlink data packets associated with the second wireless device during the handover.

[0358] In an example, the one or more downlink data packets may comprise one or more IP packets (e.g., IP packets 1,2,3,4,5,6,7,8,9), the S-(R)AN may encapsulate the IP packets into one or more SDAP SDUs/PDUs (as shown in FIG. **20**) (e.g., SDAP PDUs 1,2,3,4,5,6,7,8,9) and may send the one or more SDAP SDUs/PDUs to the PDCP entity/layer for further process. In an example, the PDCP entity/layer of the S-(R)AN may encapsulate the received one or more SDAP PDUs into one or more PDCP SDUs/PDUs (e.g., PDCP PDUs 1,2,3,4,5,6,7,8,9) and send the one or more PDCP SDUs/PDUs to the SRAP entity/layer for further processing.

[0359] In an example, based on the first message/RRCReconfiguration message, based on the PC5 Relay RLC channel configuration for relay traffic and the associated end-to-end (Uu) radio bearer(s), and/or based on the mapping information between the PC5 Relay RLC channel and the associated end-to-end (Uu) radio bearer(s), the SRAP entity/layer of the S-(R)AN may map the one or more PDCP SDUs/PDUs to a PC5 Relay RLC channel and/or an associated end-to-end (Uu) radio bearer of the second wireless

device. In an example, based on the mapping, the SRAP entity/layer may encapsulate the one or more PDCP SDUs/PDUs to one or more SRAP SDUs/PDUs (e.g., SRAP PDUs 1,2,3,4,5,6,7,8,9). The one or more SRAP SDUs/PDUs may comprise at least one of: a header of SRAP, the one or more PDCP SDUs/PDUs, the Remote UE's local ID, the identity of a PC5 Relay RLC channel, and/or the identity of the associated end-to-end (Uu) radio bearer(s). In an example, the SRAP entity/layer may send the one or more SRAP SDUs/PDUs to the RLC entity/layer. In an example, the RLC entity/layer of the S-(R)AN may encapsulate the one or more SRAP SDUs/PDUs (and/or PDCP SDUs/PDUs) into one or more RLC SDUs/PDUs (e.g., RLC PDUs 1,2,3,4,5,6,7,8,9). In an example, the RLC entity/layer may segment the SRAP SDUs/PDUs (and/or PDCP SDUs/PDUs) when encapsulating/creating RLC SDUs/PDUs. For example, the RLC entity/layer may segment each of the SRAP SDUs/PDUs (and/or PDCP SDUs/PDUs) into 2 RLC SDUs/PDUs (e.g., RLC PDUs 1-1,1-2,2-1,2-2,3-1,3-2,4-1,4-2,5-1,5-2,6-1,6-2,7-1,7-2,8-1,8-2,9-1,9-2). In an example, the RLC entity/layer may send the one or more RLC SDUs/PDUs (e.g., RLC PDUs 1,2,3,4,5,6,7,8,9) to the MAC entity/layer for further processing. The MAC entity/layer of the S-(R)AN may encapsulate the one or more RLC SDUs/PDUs (e.g., RLC PDUs 1,2,3,4,5,6,7,8,9) into one or more MAC PDUs and may send the one or more MAC PDUs to the PHY entity/layer. The PHY entity/layer may send the one or more MAC PDUs to the first wireless device (e.g., the Relay UE) over the Uu Relay RLC Channel.

[0360] In an example, first wireless device (e.g., the Relay UE) may receive a plurality of downlink data packets from the base station (e.g., the S-(R)AN). In an example, the plurality of downlink data packets may comprise plurality of downlink RLC data packets (e.g., RLC PDUs 1,2,3,5,6) associate with the second wireless device (e.g., the Remote UE). In an example, the plurality of downlink RLC data packets (e.g., RLC PDUs 1,2,3,5,6) comprises plurality of SRAP PDUs (1,2,3,5,6). In an example, an Uu RLC entity/layer of the Relay UE may send the received plurality of downlink RLC data packets (e.g., RLC PDUs 1,2,3,5,6) to the SRAP entity/layer of the Relay UE for further processing.

[0361] In an example, based on the PC5 Relay RLC channel configuration for relay traffic and the associated end-to-end (Uu) radio bearer(s), based on the mapping information between the PC5 Relay RLC channel and the associated end-to-end (Uu) radio bearer(s), and/or based on the information of the plurality of SRAP PDUs (1,2,3,5,6) (e.g., header of SRAP, the Remote UE's local ID, the identity of a PC5 Relay RLC channel, and/or the identity of the associated end-to-end (Uu) radio bearer), the SRAP entity/layer of the Relay UE may map the plurality of SRAP PDUs (1,2,3,5,6) to a PC5 Relay RLC channel and/or an associated end-to-end (Uu) radio bearer of the Remote UE. In an example, the SRAP entity/layer of the Relay UE may send/relay/forward the plurality of SRAP PDUs (1,2,3,5,6) to an PC5 RLC entity/layer of the Relay UE, wherein the PC5 RLC entity/layer is associated with the PC5 Relay RLC channel and/or the associated end-to-end (Uu) radio bearer of the Remote UE. The PC5 RLC entity/layer of the Relay UE may encapsulate the one or more plurality of SRAP SDUs/PDUs into plurality of RLC SDUs/PDUs (e.g., RLC PDUs 1,2,3,5,6). The PC5 RLC entity/layer of the Relay UE may send the plurality of RLC SDUs/PDUs to the MAC entity/layer and/or PHY entity/layer of the Relay UE for further processing. The MAC entity/layer and/or PHY entity/layer of the Relay UE may take the similar actions as described above.

[0362] In an example, the first wireless device (e.g., the Relay UE) may send the plurality of downlink data packets (e.g., the plurality of RLC SDUs/PDUs (e.g., RLC PDUs 1,2,3,5,6)) to the second wireless device (e.g., the Remote UE). For example, the PHY entity/layer of the Relay UE may send the plurality of RLC SDUs/PDUs (e.g., RLC PDUs 1,2,3,5,6) to the Remote UE via the PC5 Relay RLC channel.

[0363] In an example, the first wireless device may transmit acknowledgements of the plurality of downlink data packets to the base station. For example, the Relay UE may send an acknowledgement message (e.g., a RLC STATUS PDU) to the S-(R)AN, wherein the RLC STATUS PDU may comprise an ACK_SN field setting to 7, and/or a NACK_SN field setting to 4, indicating the Relay UE has received the RLC PDUs (1,2,3,5,6) from the S-(R)AN successfully. In an example, the RLC entity/layer of the S-(R)AN may indicate to the PDCP entity/layer of the S-(R)AN that the PDCP PDUs/SDUs (1,2,3,5,6) have been successfully delivered to the peer entity (e.g., the Relay UE and/or the Remote UE).

[0364] In an example, the second wireless device (e.g., the Remote UE) may receive one or more of the plurality of downlink data packets (e.g., the plurality of RLC SDUs/PDUs (e.g., RLC PDUs 1,2,3,5,6)) from the first wireless device (e.g., the Relay UE). For example, the RLC entity/layer of the Remote UE may receive RLC PDUs (1,2,3) from the Relay UE, where the RLC PDUs (1,2,3) may comprise PDCP PDUs (1,2,3). In an example, the RLC entity/layer of the Remote UE may send the PDCP PDUs (1,2,3) to the PDCP entity/layer of the Remote UE.

[0365] In an example, the second wireless device (e.g., the Remote UE) may have received a message (e.g., RRCReconfiguration) from the base station (e.g., the S-(R)AN), the RRCReconfiguration message may configure RLC AM for the PC5 Relay RLC Channel and/or end-to-end (Uu) radio bearer(s) associated with the first wireless device (e.g., the Relay UE).

[0366] In an example, the first wireless device may receive one or more acknowledgements of the plurality of downlink data packets from the second wireless device. For example, based on the configuration of RLC AM, based on the mapping information between the PC5 Relay RLC channel and the associated end-to-end (Uu) radio bearer(s), the RLC entity/layer of the Remote UE may send an acknowledgement message (e.g., a RLC STATUS PDU) to the RLC entity/layer of the Relay UE indicating the Remote UE has received the RLC PDUs (1,2,3) successfully. For example, the RLC entity/layer of the Remote UE may send a RLC STATUS PDU to the (PC5) RLC entity/layer of the Relay UE over PC5 Relay RLC Channel, wherein the RLC STATUS PDU may comprise an ACK_SN field setting to 4 indicating the Remote UE has received the RLC PDUs (1,2,3) successfully.

[0367] In an example, in response to transmitting the Handover Request message to the second base station (e.g., T-(R)AN), in response to receiving the Handover Request Acknowledge from the second base station, and/or in response to receiving the acknowledgements of the plurality of downlink data packets from the first wireless device (e.g., the Relay UE), the first base station (e.g., S-(R)AN) may

take one or more actions. In an example action, the first base station may send a message to the second wireless device querying the PDCP SN number. For example, the S-(R)AN may send a RRCReconfiguration message to the Remote UE via the Relay UE. The RRCReconfiguration message may comprise a parameter (e.g., statusReportRequired) requesting the Remote UE to provide a PDCP Status report.

[0368] In response to the message received, the Remote UE may send a PDCP Status report to the S-(R)AN. The PDCP Status report may indicate PDCP PDUs/SDUs that have not been received by the Remote UE. For example, the PDCP Status report may indicate that PDCP PDUs/SDUs (1,2,3) have been received successfully. For example, the PDCP Status report may indicate that PDCP PDUs/SDUs (4) have not been received by the Remote UE, and/or the SN of next expected receiving PDCP PDUs/SDUs is 4.

[0369] In an example, the S-(R)AN may trigger Uu handover by sending an RRCReconfiguration message to the UE, containing the information required to access the target cell (e.g., T-(R)AN): at least the target cell ID, the new Radio Network Temporary Identifier (C-RNTI), the T-(R)AN security algorithm identifiers for the selected security algorithms. In an example, the RRCReconfiguration message may comprise a set of dedicated Random Access Channel (RACH) resources, the association between RACH resources and SSB(s), the association between RACH resources and UE-specific CSI-RS configuration(s), common RACH resources, and/or system information of the target cell, etc.

[0370] In an example, for DRBs configured with DAPS, the S-(R)AN may not stop transmitting downlink packets until it receives the HANDOVER SUCCESS message from the T-(R)AN. In an example, CHO may not be configured simultaneously with DAPS handover. In an example, for DRBs configured with DAPS, the S-(R)AN may send the EARLY STATUS TRANSFER message. The DL COUNT value conveyed in the EARLY STATUS TRANSFER message may indicate PDCP SN and Hyper Frame Number (HFN) of the first PDCP SDU that the S-(R)AN forwards to the T-(R)AN. The S-(R)AN may not stop assigning SNs to downlink PDCP SDUs until it sends the SN STATUS TRANSFER message to the T-(R)AN.

[0371] In an example, for DRBs not configured with DAPS, the S-(R)AN may send SN STATUS TRANSFER message to the T-(R)AN to convey the uplink PDCP SN receiver status and the downlink PDCP SN transmitter status of DRBs for which PDCP status preservation applies (e.g., for RLC AM). The uplink PDCP SN receiver status may comprise at least the PDCP SN of the first missing UL PDCP SDU and may comprise a bit map of the receive status of the out of sequence UL PDCP SDUs that the UE (e.g., Remote UE) needs to retransmit in the target cell, if any. The downlink PDCP SN transmitter status may indicate the next PDCP SN that the T-(R)AN may assign to new PDCP SDUs, not having a PDCP SN yet.

[0372] In an example, based on the message/Initial Context Setup message, based on the parameter (e.g., Reliable DL Data Relay Indication, Lossless Path Switch Indication), and/or based on the determining to buffer all downlink data packets associated with the second wireless device during the handover, the first base station may set downlink PDCP SN transmitter status based on PDCP SN of the first downlink data packet of the all downlink data packets.

[0373] For example, based on the message/Initial Context Setup message, based on the parameter (e.g., Reliable DL Data Relay Indication, Lossless Path Switch Indication), based on the determining to buffer all downlink data packets associated with the second wireless device during the handover, and/or the PDCP SN of the first downlink data packet of the all downlink data packets is 1 (e.g., all buffered downlink data packets comprise PDCP PDUs (1,2,3,4,5,6,7,8,9)), the S-(R)AN may set downlink PDCP SN transmitter status to 1, indicating the next PDCP SN that the T-(R)AN may assign to new PDCP SDUs is PDCP SN 1. In an example, the S-(R)AN may send the PDCP SN transmitter status comprised in the SN STATUS TRANSFER message to the T-(R)AN. In an example, the S-(R)AN may forward all buffered downlink data packets (e.g., PDCP PDUs 1,2,3,4,5,6,7,8,9) to the T-(R)AN.

[0374] For example, based on the message/Initial Context Setup message, based on the parameter (e.g., Reliable DL Data Relay Indication, Lossless Path Switch Indication), and/or based on PDCP Status report indicating PDCP PDUs/SDUs (4) have not been received by the Remote UE, the S-(R)AN may set downlink PDCP SN transmitter status to 4, indicating the next PDCP SN that the T-(R)AN may assign to new PDCP SDUs is PDCP SN 4. In an example, the S-(R)AN may send the PDCP SN transmitter status comprised in the SN STATUS TRANSFER message to the T-(R)AN. In an example, the S-(R)AN may forward downlink data packets (e.g., PDCP PDUs 4,5,6,7,8,9) which have not been received by the Remote UE to the T-(R)AN.

[0375] In an example, in case of DAPS handover, the uplink PDCP SN receiver status and the downlink PDCP SN transmitter status for a DRB with RLC-AM and not configured with DAPS may be transferred by the SN STATUS TRANSFER message. In an example, for DRBs configured with DAPS, the S-(R)AN may additionally send the EARLY STATUS TRANSFER message(s), to inform discarding of already forwarded PDCP SDUs. The T-(R)AN may not transmit forwarded downlink PDCP SDUs to the Remote UE, whose COUNT is less than the conveyed DL COUNT value and discards them if transmission has not been attempted already.

[0376] In an example, the Remote UE may synchronise to the target cell (e.g., T-(R)AN). In an example, the Remote UE may perform Random Access (RA) procedure to access to the T-(R)AN.

[0377] In an example, the Remote UE may complete the RRC handover procedure by sending RRCReconfiguration-Complete message to the T-(R)AN. In case of DAPS handover, the Remote UE may not detach from the source cell (e.g., S-(R)AN) upon receiving the RRCReconfiguration message. The Remote UE may release the source resources and configurations and stops DL/UL reception/transmission with the source upon receiving an explicit release from the target node (e.g., T-(R)AN).

[0378] In an example, in case of DAPS handover, the T-(R)AN may send the HANDOVER SUCCESS message to the S-(R)AN to inform that the UE has successfully accessed the target cell. In return, the S-(R)AN may send the SN STATUS TRANSFER message for DRBs configured with DAPS. In an example, for DRBs configured with DAPS, the S-(R)AN may not stop delivering uplink QoS flows to the UPF until it sends the SN STATUS TRANSFER message to the T-(R)AN. The T-(R)AN may not forward QoS flows of the uplink PDCP SDUs successfully received in-sequence to the UPF until it receives the SN STATUS TRANSFER message, in which UL HFN and the first missing SN in the

uplink PDCP SN receiver status indicates the start of uplink PDCP SDUs to be delivered to the UPF. The T-(R)AN may not deliver any uplink PDCP SDUs which has an UL COUNT lower than the provided.

[0379] In an example, the T-(R)AN may send a PATH SWITCH REQUEST message to an AMF to trigger 5GC to switch the DL data path towards the T-(R)AN and to establish an NG-C interface instance towards the T-(R)AN. In an example, the 5GC may switch the DL data path towards the T-(R)AN. The UPF may send one or more "end marker" packets on the old path to the S-(R)AN per PDU session/tunnel and then can release any U-plane/TNL resources towards the S-(R)AN. In an example, the AMF may confirm the PATH SWITCH REQUEST message with the PATH SWITCH REQUEST ACKNOWLEDGE message.

[0380] Upon reception of the PATH SWITCH REQUEST ACKNOWLEDGE message from the AMF, the T-(R)AN may send UE CONTEXT RELEASE to inform the S-(R)AN about the success of the handover. The S-(R)AN may release radio and C-plane related resources associated to the Remote UE context. Any ongoing data forwarding may continue.

[0381] In an example, the T-(R)AN may send a RRCReconfiguration message to the Relay UE to reconfigure the connection between the Relay UE and the S-(R)AN. The RRCReconfiguration message may indicate the Relay UE to release Uu and PC5 Relay RLC channel configuration for relaying, and bearer mapping configuration related to the Remote UE. In an example, either Relay UE or Remote UE's AS layer may release PC5-RRC connection and may indicate upper layers to release PC5 unicast link after receiving the RRCReconfiguration message from the T-(R)AN. The timing to execute link release is up to UE implementation.

[0382] In an example, after receiving the forwarded PDCP PDUs (1,2,3,4,5,6,7,8,9) from the S-(R)AN, the T-(R)AN may transmit/forward them to the Remote UE.

[0383] In an example, after receiving the forwarded PDCP PDUs (4,5,6,7,8,9) from the S-(R)AN, the T-(R)AN may transmit/forward them to the Remote UE.

[0384] FIG. **30** is an example diagram illustrating problems of existing technologies. In existing technologies, in a scenario of path switching (e.g., from indirect path to direct path), and for the uplink data forwarding, the Relay UE may send UL data acknowledgement to the Remote UE based on whether it received the UL data from the Remote UE, and may not consider whether the UL data packages have been received by a base station (e.g., S-(R)AN) or not. Consequently, some UL data packets may be lost during the handover. In an example, a downlink (DL) may indicate a direction from a network (e.g., (R)AN) to a wireless device (e.g., Remote UE). In an example, an uplink (UL) may indicate a direction from a wireless device to a network.

[0385] As shown in FIG. **30**, the Remote UE may have established an indirect path between the Remote UE and the source base station (e.g., S-(R)AN) via a Relay UE, and the S-(R)AN may determine to switch the Remote UE to a direct path between the Remote UE and a target base station (e.g., T-(R)AN). During the handover, the remote UE may send 9 UL data packets (e.g., 1,2,3,4,5,6,7,8,9) to a UPF via the Relay UE and/or the S-(R)AN. In an example, the Relay UE may receive 6 UL data packets (e.g., 1,2,3,4,5,6). The Relay UE may relay/forward the 6 UL data packets (e.g., 1,2,3,4,5,6) to the S-(R)AN. In an example, the Relay UE may send a first acknowledgement message to the Remote UE indicating successfully receiving of the 6 UL data packets (e.g., 1,2,3,4,5,6). The first acknowledgement message may comprise acknowledgements of the 6 UL data packets (e.g., 1,2,3,4,5,6). In an example, the S-(R)AN may receive 3 UL packets (e.g., 1,2,3) from the Relay UE. The S-(R)AN may forward the 3 UL packets (e.g., 1,2,3) to the UPF. In an example, the S-(R)AN may send a second acknowledgement message to the Relay UE indicating successfully receiving of the 3 UL data packets (e.g., 1,2,3). The second acknowledgement message may comprise acknowledgements of the 3 UL data packets (e.g., 1,2,3). In an example, based on the first acknowledgement message, the Remote UE may think the 6 UL data packets (e.g., 1,2,3,4,5,6) have been received by the S-(R)AN successfully, it may discard the 6 UL data packets (e.g., 1,2,3,4,5,6) from the buffer. The Remote UE may transmit un-acknowledged UL data packets (e.g., 7,8,9) to the T-(R)AN over the direct path after the handover. The T-(R)AN may forward the UL data packets (e.g., 7,8,9) to the UPF. Consequently, the UPF received 6 UL data packets (e.g., 1,2,3,7,8,9) totally, and 3 UL data packets (e.g., 4,5,6) were lost during the handover and/or indirect path to direct path switching.

[0386] FIG. **31** is another example diagram illustrating problems of existing technologies for uplink data relaying/forwarding. For example, during the handover from indirect path to the direct path. The PDCP entity/layer of Remote UE (Uu-PDCP as shown in FIG. **31**) may send 5 PDCP PDUs (e.g., 1,2,3,4,5) to the RLC entity/layer of Remote UE (Uu-RLC as shown in FIG. **31**) via the Uu-SRAP layer. The Uu-SRAP layer may transmit/relay the PDCP PDUs (e.g., 1,2,3,4,5). In an example, the RLC entity/layer of the Remote UE may segment each of the PDCP PDU to 2 RLC-PDUs. For example, the RLC entity/layer of the Remote UE may segment PDCP PDU 1 to RLC-PDU 1-1 and RLC-PDU 1-2. In an example, the RLC entity/layer of the Remote UE may send RLC PDUs (1-1,1-2,2-1,2-2,3-1, 3-2,4-1,4-2,5-1,5-2) to the Relay UE. In an example, the RLC entity/layer of the Relay UE may transmit/relay the RLC PDUs (1-1,1-2,2-1,2-2,3-1,3-2,4-1,4-2,5-1,5-2) to the (R)AN. The RLC entity/layer of the Relay UE may send an acknowledgement message to the RLC entity/layer of the Remote UE indicating the RLC PDUs (1-1,1-2,2-1,2-2,3-1, 3-2,4-1,4-2,5-1,5-2) have been received successfully. In an example, based on the acknowledgement message, the RLC entity/layer of the Remote UE may map the acknowledgements of RLC PDUs (1-1,1-2,2-1,2-2,3-1,3-2,4-1,4-2,5-1,5-2) to the 5 PDCP PDUs (e.g., 1,2,3,4,5). The RLC entity/layer of the Remote UE may indicate the PDCP entity/layer of the Remote UE that the 5 PDCP PDUs (e.g., 1,2,3,4,5) have been received by peer wireless device. The PDCP entity/layer of the Remote UE may think the 5 PDCP PDUs (e.g., 1,2,3,4,5) have been received by the (R)AN, and may discard the 5 PDCP PDUs (e.g., 1,2,3,4,5) from the buffer.

[0387] In an example, the RLC entity/layer of the (R)AN may receive RLC PDUs (1-1,1-2,2-1,2-2,3-1,3-2). The RLC entity/layer of the (R)AN may assembly the RLC PDUs (1-1,1-2,2-1,2-2,3-1,3-2) to PDCP PDUs (1,2,3) and send the PDCP PDUs (1,2,3) to the PDCP entity/layer of the (R)AN. The RLC entity/layer of the (R)AN may send an acknowledgement message to the RLC entity/layer of the Relay UE indicating the RLC PDUs (1-1,1-2,2-1,2-2,3-1,3-2) have been received successfully.

[0388] Consequently, (R)AN have not received 2 PDCP PDUs (4,5), but it is assumed from the Remote UE perspective that the (R)AN has received them successfully, and 2 PDCP PDUs (4,5) will be lost during the handover.

[0389] Example embodiments provide enhanced mechanisms to avoid losing of uplink data packet during a handover. Example embodiments provide enhanced mechanisms to enable a first wireless device to send a second acknowledgement to a second wireless device indicating which uplink data packets have been received by a base station successfully, where the second acknowledgement is based on a first acknowledgements received from the base station. Consequently, uplink data packets (e.g., PDCP PDUs) will be relayed/forwarded by the first wireless device reliably. No uplink data packets will be lost during the handover.

[0390] In an example embodiment, a first wireless device may receive from a base station, a first message indicating a reliable uplink data relaying. In an example, the first wireless device may receive a plurality of uplink data packets associated with the base station from a second wireless device. In an example, the first wireless device may transmit the plurality of uplink data packets to the base station. In an example, based on the first message, the first wireless device may determine to waiting for at least one acknowledgements of the plurality of uplink data packets from the base station. In an example, the first wireless device may receive one or more first acknowledgements of the plurality of uplink data packets from the base station. In an example, based on the one or more first acknowledgements, the first wireless device may transmit one or more second acknowledgements of the plurality of uplink data packets to the second wireless device.

[0391] In an example embodiment, a first wireless device may receive from a base station, a first message indicating a reliable data relaying. In an example, based on the first message, the first wireless device may wait for one or more first acknowledgements of a plurality of uplink data packets from the base station, wherein the plurality of uplink data packets is transmitted to the base station. In an example, based on the one or more first acknowledgements, the first wireless device may transmit one or more second acknowledgements of the plurality of uplink data packets to the second wireless device.

[0392] FIG. **32** is an example call flow which may comprise one or more actions. In an example, by using the procedure(s) specified in FIG. **21** and/or in FIG. **22**, a Remote UE may establish an indirect path with a base station (e.g., a source base station, S-(R)AN) via a Relay UE. The Remote UE may send/receive uplink (UL)/downlink (DL) data to/from the S-(R)AN via the indirect path.

[0393] In an example, the S-(R)AN may configure the Remote UE to measure radio link signal of Uu interface between the Remote UE and the S-(R)AN for direct path. In an example, the S-(R)AN may configure the Remote UE to measure sidelink signal of PC5 interface for one or more Relay UEs. In an example, the Remote UE may send a measurement report to the S-(R)AN when configured measurement reporting criteria are met. In an example, The Remote UE may report Uu measurements results of Uu interface and/or one or multiple candidate Relay UE(s). In an example, the Remote UE may filter the appropriate Relay UE(s) according to relay selection/reselection criteria before reporting. The Remote UE may report the Relay UE candidate(s) that fulfil the higher layer criteria. In an example, the measurement reports may comprise at least a Relay UE ID, a Relay UE's serving cell ID, and/or a sidelink measurement quantity information. In an example, Sidelink Discovery Reference Signal Received Power (SD-RSRP) may be used as sidelink measurement quantity. In an example, the SD-RSRP may be defined as linear average over the power contributions of the resource elements that carry demodulation reference signals associated with PSDCH for which CRC has been validated. The reference point for the SD-RSRP may be the antenna connector of the UE. If receiver diversity is in use by the UE, the reported value may not be lower than the corresponding SD-RSRP of any of the individual diversity branches.

[0394] In an example, based on the measurement report and/or Radio Resource Management (RRM) information, the S-(R)AN may determine handover the Remote UE to a target base station (e.g., T-(R)AN) to a direct path between the Remote UE and the T-(R)AN.

[0395] In an example, the RRM may comprise a wide range of techniques and procedures, including power control, scheduling, cell search, cell reselection, handover, radio link or connection monitoring, and/or connection establishment/re-establishment. In an example, the RRM information/RRM configuration may comprise both beam measurement information (for layer 3 mobility) associated to Synchronization Signal Block (SSB)(s) and Channel State Information Reference Signal (CSI-RS)(s) for the reported cell(s) if both types of measurements are available. In an example, if Carrier Aggregation (CA) CA is configured, the RRM information/RRM configuration may comprise the list of best cells on each frequency for which measurement information is available. In an example, the RRM (measurement) information may also include the beam measurement for the listed cells that belong to the target gNB.

[0396] In an example, a first base station (e.g., the S-(R)AN) may issue/transmit a Handover Request message to a second base station (e.g., the T-(R)AN). In an example, the Handover Request message may comprise a transparent RRC container with necessary information to prepare the handover at the T-(R)AN. In an example, the Handover Request message may comprise at least one of: the target cell ID, KgNB*, the C-RNTI of the Remote UE in the S-(R)AN, RRM configuration including Remote UE inactive time, basic AS-configuration including antenna Info and DL Carrier Frequency, the current QoS flow to DRB mapping rules applied to the Remote UE, the SIB1 from S-(R)AN, the Remote UE capabilities for different RATs, PDU session related information, and/or measurement report information including beam-related information if available. The PDU session related information may comprise the slice information and QoS flow level QoS profile(s). In an example, the S-(R)AN may also request a Dual Active Protocol Stack (DAPS) handover for one or more DRBs. In an example, the DAPS handover may allow a wireless device to receive and transmit data simultaneously to source cell and target cell in a handover ensuring seamless data continuity. In an example, after transmitting a Handover Request message, the S-(R)AN may not reconfigure the Remote UE to perform Reflective QoS flow to DRB mapping.

[0397] In an example, the T-(R)AN may perform admission control. In an example, the admission control may comprise determining whether to accept the handover based

on the one or more parameters in the Handover Request message. In an example, the admission control may comprise determining whether to accept the handover based on radio resource of the T-(R)AN to support the RRC connections/PDU sessions/network slices for the Remote UE. In an example, the radio resource may comprise at least one of: frequency resource, time resource, and/or radio bearer resource. In an example the time resource may comprise/indicate (NR) frame, subframes, slots, OFDM symbols, Bandwidth Part (BWP), RG (Resource Grid). In an example, the frequency resource may indicate resource of frequency (e.g., frequency band, carrier, subcarrier) allocated for sending and/or receiving signaling and/or user data for a wireless device. In an example, the frequency resource may comprise/indicate BWP, resource elements (REs) and resource blocks (RBs). In an example, radio bearer resource may indicate resource for a radio bearer. In an example, the radio bearer resource may indicate/comprise time resource and/or frequency resource for the radio bearer. In an example, the radio bearer may comprise signaling radio bearer and/or data radio bearer.

[0398] In an example, the T-(R)AN may perform network slice-aware admission control if the network slice information is received from the S-(R)AN. In an example, if the PDU sessions are associated with non-supported network slices, the T-(R)AN may reject such PDU Sessions. In an example, the T-(R)AN may prepare the handover with layer 1 (L1)/layer 2 (L2). In an example, the T-(R)AN may send a Handover Request Acknowledge message to the S-(R)AN. The Handover Request Acknowledge message may comprise a transparent container to be sent to the Remote UE as an RRC message to perform the handover. The T-(R)AN may indicate if a DAPS handover is accepted or not by the T-(R)AN.

[0399] In an example, as soon as the S-(R)AN receives the Handover Request Acknowledge message, or as soon as the transmission of the handover command is initiated in the downlink, the S-(R)AN may perform data forwarding by forwarding downlink data packets to the T-(R)AN. In an example, for DRBs configured with DAPS, downlink PDCP SDUs may be forwarded with SN assigned by the S-(R)AN, until SN assignment is handed over to the T-(R)AN.

[0400] In an example, a first wireless device (e.g., the Relay UE) may receive a first message (e.g., a RRCReconfiguration, SIB, MIB) from a base station (e.g., the S-(R)AN), the first message/RRCReconfiguration message may indicate a reliable uplink data relaying. In an example, the first message/RRCReconfiguration message may comprise a parameter (e.g., Reliable Data Relay Indication, Reliable UL Data Relay Indication, Lossless Path Switch Indication) indicating a reliable uplink data relaying for one or more second wireless devices (e.g., the Remote UE).

[0401] In an example, the first message/RRCReconfiguration message and/or the parameter (e.g., Reliable Data Relay Indication, Reliable UL Data Relay Indication, Lossless Path Switch Indication) may indicate reliable data relaying/forwarding between a first node (e.g., a wireless device) and a second node (e.g., a base station, a second wireless device).

[0402] In an example, the reliable uplink data relaying (and/or reliable data relaying/forwarding) may indicate the first wireless device (e.g., the Relay UE) may relay/forward a plurality of uplink data packets from a second wireless device (e.g., the Remote UE) to a base station (e.g., the S-(R)AN) over an indirect path without losing at least one of the plurality of uplink data packets.

[0403] In an example, the reliable uplink data relaying (and/or reliable data relaying/forwarding) may indicate the first wireless device (e.g., the Relay UE) may relay/forward a plurality of uplink data packets from the second wireless device (e.g., the Remote UE) to the base station (e.g., the S-(R)AN) over an indirect path with a configured number of uplink data packets lost during the relaying/forwarding (e.g., because of handover). For example, the reliable uplink data relaying may indicate packet loss rate is lower than a configured number (e.g., 0.01%) (e.g., during a handover). In an example, the packet loss rate may indicate data packets that could not be received by a target (e.g., the base station) comprising packets dropped, packets lost in transmission and/or packets received in wrong format.

[0404] In an example, the reliable uplink data relaying (and/or reliable data relaying/forwarding) may indicate a lossless path switching (e.g., from indirect path to direct path) and/or a lossless handover.

[0405] In an example, the reliable uplink data relaying (and/or reliable data relaying/forwarding) may indicate the first wireless device (e.g., the Relay UE) waits for one or more first acknowledgements from the base station (e.g., the S-(R)AN) before it sends one or more second acknowledgements to the second wireless device (e.g., the Remote UE).

[0406] In an example, the reliable uplink data relaying (and/or reliable data relaying/forwarding) may indicate one or more second acknowledgements sent by the first wireless device (e.g., the Relay UE) to the second wireless device (e.g., the Remote UE) is based on one or more first acknowledgements received from the base station (e.g., the S-(R)AN).

[0407] In an example, the one or more first acknowledgements of the plurality of uplink data packets may indicate whether the base station has received the plurality of uplink data packets from the first wireless device. In an example, the one or more second acknowledgements of the plurality of uplink data packets may indicate whether the base station and/or the first wireless device has/have received the plurality of uplink data packets from the second wireless device.

[0408] In an example, the first wireless device (e.g., the Relay UE) may receive the first message (e.g., a RRCReconfiguration) from the base station (e.g., the S-(R)AN) during the establishment of the indirect path and/or before the handover. In an example, the first wireless device (e.g., the Relay UE) may receive the first message (e.g., a RRCReconfiguration) from the base station (e.g., the S-(R)AN) during the handover.

[0409] FIG. **33** is an example diagram depicting the first message/RRCReconfiguration. The first message/RRCReconfiguration message may comprise a parameter sl-ReliableULDataRelayIndication indicating reliable uplink data relaying (and/or reliable data relaying). The first message/RRCReconfiguration may comprise one or more parameters as shown in FIG. **33**.

[0410] In an example, the first message/RRCReconfiguration message may comprise configuration parameters indicating RLC Acknowledged Mode (AM) to perform data transfer/receive of RLC data packets. In an example, the first message/RRCReconfiguration message may comprise configuration parameters indicating RLC AM for the Uu Relay RLC Channel/Uu RLC between the Relay UE and the

S-(R)AN as shown in FIG. **18** and/or FIG. **19**. In an example, the first message/RRCReconfiguration message may comprise configuration parameters indicating RLC AM for the PC5 Relay RLC Channel/PC5 RLC between the Relay UE and the Remote UE as shown in FIG. **18** and/or FIG. **19**.

[0411] In an example, the Acknowledged Mode (AM) may indicate a first RLC entity (e.g., RLC entity in a second wireless device) may requires ACK/NACK from a second RLC entity (e.g., RLC entity in a first wireless device). In an example, the configuration parameters of RLC AM may indicate the first wireless device (e.g., the Relay UE) sends an acknowledgement to the second wireless device (e.g., the Remote UE) when receiving an uplink data packet from the second wireless device (e.g., the Remote UE).

[0412] In an example, the base station (e.g., the S-(R)AN) may be configured to RLC AM for the Uu Relay RLC Channel/Uu RLC between the first wireless device (e.g., the Relay UE) and the base station (e.g., the S-(R)AN). For example, the configured RLC AM for the S-(R)AN may indicate the S-(R)AN to send an acknowledgement to the Relay UE when receiving an uplink data packet from the Relay UE.

[0413] In an example, an RLC entity may be configured to perform data transfer in one of the following three modes: Transparent Mode (TM), Unacknowledged Mode (UM) or Acknowledged Mode (AM). Consequently, an RLC entity may be categorized as a TM RLC entity, an UM RLC entity or an AM RLC entity depending on the mode of data transfer that the RLC entity is configured to provide.

[0414] In an example, an AM RLC entity may comprise a transmitting side and a receiving side. The transmitting side of an AM RLC entity may receive RLC SDUs from upper layer and sends RLC PDUs to its peer AM RLC entity via lower layers. The receiving side of an AM RLC entity may deliver RLC SDUs to upper layer and may receive RLC PDUs from its peer AM RLC entity via lower layers. In an example, the receiving side of an AM RLC entity may send one or more acknowledgements (e.g., ACK/NACK) to the transmitting side of an AM RLC entity indicating whether it has received one or more data packets. In an example, after receiving acknowledgements from receiving side of an AM RLC entity, the transmitting side of an AM RLC entity may indicate to its upper layer that it has successfully delivered upper layers PDCP PDUs.

[0415] In an example, the first message/RRCReconfiguration message may comprise PC5 Relay RLC channel configuration for relay traffic and the associated end-to-end radio bearer(s) between the second wireless device (e.g., the Remote UE) and the base station (e.g., the S-(R)AN).

[0416] In an example, the PC5 Relay RLC channel configuration for relay traffic and the associated end-to-end (Uu) radio bearer(s) may comprise mapping information between the PC5 Relay RLC channel and the associated end-to-end (Uu) radio bearer(s). For example, the PC5 Relay RLC channel configuration for relay traffic and the associated end-to-end (Uu) radio bearer(s) may comprise an identity of a PC5 Relay RLC channel, an identity information of associated Remote UE (e.g., Remote UE's local ID) and/or an identity of each of the associated end-to-end (Uu) radio bearer(s) of the Remote UE. In an example, the mapping information between the PC5 Relay RLC channel and the associated end-to-end (Uu) radio bearer(s) may comprise an identity of a PC5 Relay RLC channel, an identity information of associated Remote UE (e.g., Remote UE's local ID) and/or an identity of each of the associated end-to-end (Uu) radio bearer(s) of the Remote UE.

[0417] In an example, based on the PC5 Relay RLC channel configuration for relay traffic and the associated end-to-end (Uu) radio bearer(s), and/or based on the mapping information between the PC5 Relay RLC channel and the associated end-to-end (Uu) radio bearer(s), the Relay UE may map/associate the PC5 Relay RLC channel to each of the associated end-to-end (Uu) radio bearer(s) of the Remote UE.

[0418] In an example, the end-to-end (Uu) radio bearer(s) may comprise radio bearers for the second wireless device (e.g., the Remote UE). In an example, the end-to-end (Uu) radio bearer(s) may be between the second wireless device (e.g., the Remote UE) and the base station (e.g., the S-(R)AN) via the first wireless device (e.g., the Relay UE). In an example, the end-to-end (Uu) radio bearer(s) may comprise end-to-end (Uu) data radio bearer(s) and/or end-to-end (Uu) signaling radio bearer(s).

[0419] In an example, the PC5 Relay RLC channel may be between the first wireless device (e.g., the Relay UE) and the second wireless device (e.g., the Remote UE). In an example, the PC5 Relay RLC channel may be associated with a PC5 RLC entity of the first wireless device (e.g., the Relay UE) and/or a PC5 RLC entity of the second wireless device (e.g., the Remote UE).

[0420] In an example, the first message/RRCReconfiguration message may comprise a L2 U2N Relay UE ID indicating identity of the first wireless device (e.g., the Relay UE). In an example, the first message/RRCReconfiguration message may comprise a Remote UE's local ID indicating identity of the second wireless device (e.g., the Remote UE).

[0421] In an example, the second wireless device (e.g., the Remote UE) may receive a first message (e.g., a RRCReconfiguration, SIB, MIB) from a base station (e.g., the S-(R)AN), the first message/RRCReconfiguration message may comprise PC5 Relay RLC channel configuration for relay traffic and the associated end-to-end radio bearer(s) between the second wireless device (e.g., the Remote UE) and the base station (e.g., the S-(R)AN). The definition/content of the PC5 Relay RLC channel configuration for relay traffic and the associated end-to-end radio bearer(s) may be similar to (and/or the same as) the definition/content of the PC5 Relay RLC channel configuration for relay traffic and the associated end-to-end radio bearer(s) as described above. In an example, the first message/RRCReconfiguration message may comprise a L2 U2N Relay UE ID indicating identity of the first wireless device (e.g., the Relay UE). In an example, the first message/RRCReconfiguration message may comprise a Remote UE's local ID indicating identity of the second wireless device (e.g., the Remote UE).

[0422] In an example, a second wireless device (e.g., the Remote UE) may transmit a plurality of uplink data packets to a UPF via a first wireless device (e.g., the Relay UE) and/or a base station (e.g., the S-(R)AN). In an example, the plurality of uplink data packets is associated with the base station (e.g., the S-(R)AN), e.g., the plurality of uplink data packets is sent to the base station (e.g., the S-(R)AN) over an end-to-end (Uu) data radio bearer(s). In an example, the plurality of uplink data packets may comprise one or more IP packets (e.g., IP packets (1,2,3,4,5,6,7,8,9)), the Remote UE may encapsulate the IP packets into one or more SDAP SDUs/PDUs (as shown in FIG. **20**) (e.g., SDAP PDUs

(1,2,3,4,5,6,7,8,9)) and may send the one or more SDAP SDUs/PDUs to the PDCP entity/layer for further process. In an example, the PDCP entity/layer of the Remote UE may encapsulate the received one or more SDAP PDUs into one or more PDCP SDUs/PDUs (e.g., PDCP PDUs (1,2,3,4,5,6,7,8,9)) and send the one or more PDCP SDUs/PDUs to the SRAP entity/layer for further processing.

[0423] In an example, based on the first message/RRCReconfiguration message, based on the PC5 Relay RLC channel configuration for relay traffic and the associated end-to-end (Uu) radio bearer(s), and/or based on the mapping information between the PC5 Relay RLC channel and the associated end-to-end (Uu) radio bearer(s), the SRAP entity/layer of the Remote UE may map the one or more PDCP SDUs/PDUs to a PC5 Relay RLC channel and/or an associated end-to-end (Uu) radio bearer of the Remote UE. In an example, based on the mapping, the SRAP entity/layer may encapsulate the one or more PDCP SDUs/PDUs to one or more SRAP SDUs/PDUs (e.g., SRAP PDUs (1,2,3,4,5,6,7,8,9)). The one or more SRAP SDUs/PDUs may comprise at least one of: a SRAP header, the one or more PDCP SDUs/PDUs, the Remote UE's local ID, the identity of a PC5 Relay RLC channel, and/or the identity of the associated end-to-end (Uu) radio bearer(s) of the Remote UE. In an example, the SRAP entity/layer may send the one or more SRAP SDUs/PDUs to the RLC entity/layer. In an example, the RLC entity/layer of the Remote UE may encapsulate the one or more SRAP SDUs/PDUs (and/or PDCP SDUs/PDUs) into one or more RLC SDUs/PDUs (e.g., RLC PDUs (1,2,3,4,5,6,7,8,9)). In an example, the RLC entity/layer may segment the SRAP SDUs/PDUs (and/or PDCP SDUs/PDUs) when encapsulating/creating RLC SDUs/PDUs. For example, the RLC entity/layer may segment each of the SRAP SDUs/PDUs (and/or PDCP SDUs/PDUs) into 2 RLC SDUs/PDUs (e.g., RLC PDUs (1-1,1-2,2-1,2-2,3-1,3-2,4-1,4-2,5-1,5-2,6-1,6-2,7-1,7-2,8-1,8-2,9-1,9-2)). In an example, the RLC entity/layer of the Remote UE may send the one or more RLC SDUs/PDUs (e.g., RLC PDUs (1,2,3,4,5,6,7,8,9)) to the MAC entity/layer for further processing. The MAC entity/layer of the Remote UE may encapsulate the one or more RLC SDUs/PDUs (e.g., RLC PDUs (1,2,3,4,5,6,7,8,9)) into one or more MAC PDUs and may send the one or more MAC PDUs to the PHY entity/layer. The PHY entity/layer of the Remote UE may send the one or more MAC PDUs to the first wireless device (e.g., the Relay UE) over the PC5 Relay RLC Channel.

[0424] In an example, first wireless device (e.g., the Relay UE) may receive a plurality of uplink data packets from a second wireless device (e.g., the Remote UE), where the plurality of uplink data packets is associated with (and/or sent to) the base station (e.g., the S-(R)AN).

[0425] In an example, the plurality of uplink data packets may comprise plurality of uplink RLC data packets (e.g., RLC PDUs (1,2,3,4,5,6)). In an example, the plurality of uplink RLC data packets (e.g., RLC PDUs (1,2,3,4,5,6)) comprises plurality of SRAP PDUs (1,2,3,4,5,6). In an example, an PC5 RLC entity/layer of the Relay UE may send the received plurality of uplink RLC data packets (e.g., RLC PDUs (1,2,3,4,5,6)) to the SRAP entity/layer of the Relay UE for further processing.

[0426] In an example, based on the first message, based on the PC5 Relay RLC channel configuration for relay traffic and the associated end-to-end (Uu) radio bearer(s), based on the mapping information between the PC5 Relay RLC channel and the associated end-to-end (Uu) radio bearer(s), and/or based on the information of the plurality of SRAP PDUs (1,2,3,4,5,6) (e.g., header of SRAP, the Remote UE's local ID, the identity of a PC5 Relay RLC channel, and/or the identity of the associated end-to-end (Uu) radio bearer of the Remote UE), the SRAP entity/layer of the Relay UE may map the plurality of SRAP PDUs (1,2,3,4,5,6) to a Uu Relay RLC channel and/or an associated base station (e.g., the S-(R)AN). In an example, the SRAP entity/layer of the Relay UE may transmit/relay/forward the plurality of RLC PDUs (1,2,3,4,5,6) to an Uu RLC entity/layer of the Relay UE, wherein the Uu RLC entity/layer is associated with the PC5 Relay RLC channel and/or the associated end-to-end (Uu) radio bearer of the Remote UE. In an example, the Uu RLC entity/layer of the Relay UE may encapsulate the one or more plurality of SRAP SDUs/PDUs into plurality of RLC SDUs/PDUs (e.g., RLC PDUs (1,2,3,4,5,6)). The Uu RLC entity/layer of the Relay UE may send the plurality of RLC SDUs/PDUs to the MAC entity/layer and/or PHY entity/layer of the Relay UE, and the PHY entity/layer of the Relay UE may transmit the RLC PDUs (1,2,3,4,5,6) to the S-(R)AN.

[0427] In an example, the first wireless device (e.g., the Relay UE) may send the plurality of uplink data packets (e.g., the plurality of RLC SDUs/PDUs (e.g., RLC PDUs (1,2,3,4,5,6)) to the base station (e.g., the S-(R)AN) via the Uu Relay RLC channel.

[0428] In an example, based on the first message/RRCReconfiguration message, the first wireless device may determine to wait for at least one acknowledgements of the plurality of uplink data packets from the base station.

[0429] For example, the first message and/or the parameter/Reliable UL Data Relay Indication may indicate a reliable uplink data relaying/forwarding, based on the first message and/or the parameter/Reliable UL Data Relay Indication, the Relay UE may determine to wait for at least one acknowledgement (e.g., RLC acknowledgements) of the plurality of uplink data packets (e.g., uplink RLC PDUs) from the base station (e.g., the S-(R)AN).

[0430] For example, the first message and/or the parameter/Reliable UL Data Relay Indication may indicate a reliable uplink data relaying/forwarding, based on the first message and/or the parameter/Reliable UL Data Relay Indication, the Relay UE may determine to wait for at least one first acknowledgements of the plurality of uplink data packets from the S-(R)AN, before sending one or more second acknowledgements to the Remote UE.

[0431] In an example, the base station (e.g., S-(R)AN) may receive one or more of the plurality of uplink data packets (e.g., the plurality of RLC SDUs/PDUs) from the first wireless device (e.g., the Relay UE). For example, the RLC entity/layer of the S-(R)AN may receive RLC PDUs (1,2,3) from the Relay UE, where the RLC PDUs (1,2,3) may comprise SRAP PDUs (1,2,3). The RLC entity/layer of the S-(R)AN may transmit the SRAP PDUs (1,2,3) to the SRAP entity/layer. In an example, based on the information in the SRAP PDUs (e.g., the Remote UE's local ID, the identity of a PC5 Relay RLC channel, and/or the identity of the associated end-to-end (Uu) radio bearer(s) of the Remote UE), the SRAP entity/layer of the S-(R)AN may map the SRAP PDUs (1,2,3) to a PDCP entity/layer of the S-(R)AN, where the PDCP entity/layer of the S-(R)AN is associated with the Remote UE and/or an end-to-end (Uu) radio bearer(s) of the Remote UE. The SRAP entity may decap-

sulate the SRAP PDUs (1,2,3) to PDCP PDUs (1,2,3). In an example, the SRAP entity/layer of the S-(R)AN may send the PDCP PDUs (1,2,3) to the PDCP entity/layer of the S-(R)AN.

[0432] In an example, the first wireless device (e.g., Relay UE) may receive one or more first acknowledgements of the plurality of uplink data packets from the base station (e.g., S-(R)AN). For example, based on the configuration of RLC AM, after transmitting the SRAP PDUs (1,2,3) and/or PDCP PDUs (1,2,3) to the SRAP entity/layer and/or PDCP entity/layer of the S-(R)AN, the RLC entity/layer of the S-(R)AN may send a first acknowledgement message (e.g., a first RLC STATUS PDU) to the RLC entity/layer of the Relay UE indicating the S-(R)AN has received the RLC PDUs (1,2,3) successfully. For example, the RLC entity/layer of the S-(R)AN may send a first RLC STATUS PDU to the (Uu) RLC entity/layer of the Relay UE over Uu Relay RLC Channel, wherein the first RLC STATUS PDU may comprise an Acknowledgement Sequence Number (ACK_SN) field, and the ACK_SN field may be set to 4 indicating the S-(R)AN has received the RLC PDUs (1,2,3) successfully.

[0433] In an example, ACK_SN field may indicate the Sequence Number (SN) of the next not received RLC SDU which is not reported as missing in the STATUS PDU. When the transmitting side of an AM RLC entity receives a STATUS PDU, it interprets that all RLC SDUs up to but not including the RLC SDU with SN=ACK_SN have been received by its peer AM RLC entity, excluding those RLC SDUs indicated in the STATUS PDU with Negative Acknowledgement SN (NACK_SN), portions of RLC SDUs indicated in the STATUS PDU with NACK_SN, SOstart and SOend, RLC SDUs indicated in the STATUS PDU with NACK_SN and NACK_range, and portions of RLC SDUs indicated in the STATUS PDU with NACK_SN, NACK range, SOstart and SOend. In an example, the NACK_SN field may indicate the SN of the RLC SDU (or RLC SDU segment) that has been detected as lost at the receiving side of the AM RLC entity.

[0434] In an example, based on the one or more first acknowledgements, the first wireless device may send one or more second acknowledgements of the plurality of uplink data packets to the Remote UE. For example, based on the first RLC STATUS PDU received from the S-(R)AN, the Relay UE may send a second RLC STATUS PDU to the Remote UE, wherein the second RLC STATUS PDU may comprise an ACK_SN field, and the ACK_SN field may be set to 4 indicating the S-(R)AN and/or the Relay UE has/have received the RLC PDUs (1,2,3) from the Remote UE successfully.

[0435] In an example, each of the one or more second acknowledgements of the plurality of uplink data packets may be associated with each of the plurality of uplink data packets. For example, the second RLC STATUS PDU may be associated with the RLC PDUs (1,2,3) received from the Remote UE. In an example, each of the one or more second acknowledgements may indicate each of the plurality of uplink data packets has been received successfully by the base station and/or the first wireless device. For example, the second RLC STATUS PDU may indicate that RLC PDUs (1), RLC PDUs (2) and/or RLC PDUs (3) have been received by the S-(R)AN and/or the Relay UE successfully. In an example, each of the one or more second acknowledgements may indicate each of the plurality of uplink data packets has not been received. For example, the second RLC STATUS PDU may indicate that RLC PDUs (4) has not been received by the S-(R)AN.

[0436] In an example, in response to the one or more second acknowledgements received, the second wireless device may take one or more actions. For example, the RLC entity/layer of the Remote UE may receive the one or more second acknowledgements (e.g., the second RLC STATUS PDU) from the RLC entity/layer of the Relay UE, and the second RLC STATUS PDU may indicate the S-(R)AN and/or the Relay UE has/have received the RLC PDUs (1,2,3) from the Remote UE successfully. In an example, the RLC entity/layer of the Remote UE may indicate to the PDCP entity/layer of the Remote UE that the PDCP PDUs (1,2,3) have been received by the peer PDCP entity (e.g., PDCP entity of the S-(R)AN) successfully. In an example, the PDCP entity/layer of the Remote UE may discard/remove the PDCP PDUs (1,2,3) from the buffer.

[0437] In an example, the S-(R)AN may trigger Uu handover by sending an RRCReconfiguration message to the Remote UE. The RRCReconfiguration message may comprise the information required to access the target cell (e.g., T-(R)AN), e.g., at least the target cell ID, the new Radio Network Temporary Identifier (C-RNTI), and/or the T-(R)AN security algorithm identifiers for the selected security algorithms. In an example, the RRCReconfiguration message may comprise a set of dedicated Random Access Channel (RACH) resources, the association between RACH resources and SSB(s), the association between RACH resources and UE-specific CSI-RS configuration(s), common RACH resources, and/or system information of the target cell, etc.

[0438] In an example, for DRBs configured with DAPS, the S-(R)AN may not stop transmitting downlink packets until it receives the HANDOVER SUCCESS message from the T-(R)AN. In an example, CHO may not be configured simultaneously with DAPS handover. In an example, for DRBs configured with DAPS, the S-(R)AN may send the EARLY STATUS TRANSFER message. The DL COUNT value conveyed in the EARLY STATUS TRANSFER message may indicate PDCP SN and Hyper Frame Number (HFN) of the first PDCP SDU that the S-(R)AN forwards to the T-(R)AN. The S-(R)AN may not stop assigning SNs to downlink PDCP SDUs until it sends the SN STATUS TRANSFER message to the T-(R)AN.

[0439] In an example, for DRBs not configured with DAPS, the S-(R)AN may send SN STATUS TRANSFER message to the T-(R)AN to convey the uplink PDCP SN receiver status and the downlink PDCP SN transmitter status of DRBs for which PDCP status preservation applies (e.g., for RLC AM). The uplink PDCP SN receiver status may comprise at least the PDCP SN of the first missing UL PDCP SDU and may comprise a bit map of the receive status of the out of sequence UL PDCP SDUs that the UE (e.g., Remote UE) needs to retransmit in the target cell, if any. The downlink PDCP SN transmitter status may indicate the next PDCP SN that the T-(R)AN may assign to new PDCP SDUs, not having a PDCP SN yet.

[0440] In an example, in case of DAPS handover, the uplink PDCP SN receiver status and the downlink PDCP SN transmitter status for a DRB with RLC-AM and not configured with DAPS may be transferred by the SN STATUS TRANSFER message. In an example, for DRBs configured with DAPS, the S-(R)AN may additionally send the EARLY

STATUS TRANSFER message(s), to inform discarding of already forwarded PDCP SDUs. The T-(R)AN may not transmit forwarded downlink PDCP SDUs to the Remote UE, whose COUNT is less than the conveyed DL COUNT value and discards them if transmission has not been attempted already.

[0441] In an example, the Remote UE may synchronise to the target cell (e.g., T-(R)AN). In an example, the Remote UE may perform Random Access (RA) procedure to access to the T-(R)AN. In an example, the S-(R)AN may forward undelivered/unreceived PDCP PDUs to the T-(R)AN.

[0442] In an example, the Remote UE may complete the RRC handover procedure by sending RRCReconfiguration-Complete message to the T-(R)AN. In case of DAPS handover, the Remote UE may not detach from the source cell (e.g., S-(R)AN) upon receiving the RRCReconfiguration message. The Remote UE may release the source resources and configurations and stops DL/UL reception/transmission with the source upon receiving an explicit release from the target node (e.g., T-(R)AN).

[0443] In an example, in case of DAPS handover, the T-(R)AN may send the HANDOVER SUCCESS message to the S-(R)AN to inform that the UE has successfully accessed the target cell. In return, the S-(R)AN may send the SN STATUS TRANSFER message for DRBs configured with DAPS. In an example, for DRBs configured with DAPS, the S-(R)AN may not stop delivering uplink QoS flows to the UPF until it sends the SN STATUS TRANSFER message to the T-(R)AN. The T-(R)AN may not forward QoS flows of the uplink PDCP SDUs successfully received in-sequence to the UPF until it receives the SN STATUS TRANSFER message, in which UL HFN and the first missing SN in the uplink PDCP SN receiver status indicates the start of uplink PDCP SDUs to be delivered to the UPF. The T-(R)AN may not deliver any uplink PDCP SDUs which has an UL COUNT lower than the provided.

[0444] In an example, the T-(R)AN may send a PATH SWITCH REQUEST message to an AMF to trigger 5GC to switch the DL data path towards the T-(R)AN and to establish an NG-C interface instance towards the T-(R)AN. In an example, the 5GC may switch the DL data path towards the T-(R)AN. The UPF may send one or more "end marker" packets on the old path to the S-(R)AN per PDU session/tunnel and then can release any U-plane/TNL resources towards the S-(R)AN. In an example, the AMF may confirm the PATH SWITCH REQUEST message with the PATH SWITCH REQUEST ACKNOWLEDGE message.

[0445] Upon reception of the PATH SWITCH REQUEST ACKNOWLEDGE message from the AMF, the T-(R)AN may send UE CONTEXT RELEASE to inform the S-(R)AN about the success of the handover. The S-(R)AN may release radio and C-plane related resources associated to the Remote UE context. Any ongoing data forwarding may continue.

[0446] In an example, the T-(R)AN may send a RRCReconfiguration message to the Relay UE to reconfigure the connection between the Relay UE and the S-(R)AN. The RRCReconfiguration message may indicate the Relay UE to release Uu and PC5 Relay RLC channel configuration for relaying, and bearer mapping configuration related to the Remote UE. In an example, either Relay UE or Remote UE's AS layer may release PC5-RRC connection and may indicate upper layers to release PC5 unicast link after receiving the RRCReconfiguration message from the T-(R)AN. The timing to execute link release is up to UE implementation.

[0447] In an example, based on the one or more second acknowledgements received from the first wireless device, the second wireless device may transmit one or more of the plurality of uplink data packets to a second base station, wherein the one or more of the plurality of uplink data packets have not been received/acknowledged by the first base station. For example, the Remote UE may transmit the uplink data packets (e.g. PDCP PDUs (4,5,6,7,8,9)) to the T-(R)AN during the handover and/or after the handover, where the uplink data packets (e.g. PDCP PDUs (4,5,6,7,8,9)) have not been received/acknowledged by the S-(R)AN.

[0448] FIG. **34** is an example diagram depicting the procedures of a Relay UE as per an aspect of an embodiment of the present disclosure.

[0449] FIG. **35** is an example call flow which may comprise one or more actions. In an example, by using the procedure(s) specified in FIG. **21** and/or in FIG. **22**, a Remote UE may establish an indirect path with a base station (e.g., a source base station, S-(R)AN) via a Relay UE. The Remote UE may send/receive uplink (UL)/downlink (DL) data to/from the S-(R)AN via the indirect path.

[0450] In an example, the S-(R)AN may configure the Remote UE to measure radio link signal of Uu interface between the Remote UE and the S-(R)AN for direct path. In an example, the S-(R)AN may configure the Remote UE to measure sidelink signal of PC5 interface for one or more Relay UEs. In an example, the Remote UE may send a measurement report to the S-(R)AN when configured measurement reporting criteria are met. In an example, The Remote UE may report Uu measurements results of Uu interface and/or one or multiple candidate Relay UE(s). In an example, the Remote UE may filter the appropriate Relay UE(s) according to relay selection/reselection criteria before reporting. The Remote UE may report the Relay UE candidate(s) that fulfil the higher layer criteria. In an example, the measurement reports may comprise at least a Relay UE ID, a Relay UE's serving cell ID, and/or a sidelink measurement quantity information. In an example, Sidelink Discovery Reference Signal Received Power (SD-RSRP) may be used as sidelink measurement quantity. In an example, the SD-RSRP may be defined as linear average over the power contributions of the resource elements that carry demodulation reference signals associated with PSDCH for which CRC has been validated. The reference point for the SD-RSRP may be the antenna connector of the UE. If receiver diversity is in use by the UE, the reported value may not be lower than the corresponding SD-RSRP of any of the individual diversity branches.

[0451] In an example, based on the measurement report and/or RRM information, the S-(R)AN may determine handover the Remote UE to a target base station (e.g., T-(R)AN) via a direct path.

[0452] In an example, the S-(R)AN may issue/transmit a Handover Request message to the T-(R)AN. In an example, the Handover Request message may comprise a transparent RRC container with necessary information to prepare the handover at the T-(R)AN. In an example, the Handover Request message may comprise at least one of: the target cell ID, KgNB*, the C-RNTI of the Remote UE in the S-(R)AN, RRM configuration including Remote UE inactive time, basic AS-configuration including antenna Info and

DL Carrier Frequency, the current QoS flow to DRB mapping rules applied to the Remote UE, the SIB1 from S-(R)AN, the Remote UE capabilities for different RATs, PDU session related information, and/or measurement report information including beam-related information if available. The PDU session related information may comprise the slice information and QoS flow level QoS profile(s). In an example, the S-(R)AN may also request a Dual Active Protocol Stack (DAPS) handover for one or more DRBs. In an example, the DAPS handover may allow a wireless device to receive and transmit data simultaneously to source cell and target cell in a handover ensuring seamless data continuity. In an example, after transmitting a Handover Request message, the S-(R)AN may not reconfigure the Remote UE to perform Reflective QoS flow to DRB mapping.

[0453] In an example, the T-(R)AN may perform admission control. In an example, the admission control may comprise determining whether to accept the handover based on the one or more parameters in the Handover Request message. In an example, the admission control may comprise determining whether to accept the handover based on radio resource of the T-(R)AN to support the RRC connections/PDU sessions/network slices for the Remote UE. In an example, the radio resource may comprise at least one of: frequency resource, time resource, and/or radio bearer resource. In an example the time resource may comprise/indicate (NR) frame, subframes, slots, OFDM symbols, Bandwidth Part (BWP), RG (Resource Grid). In an example, the frequency resource may indicate resource of frequency (e.g., frequency band, carrier, subcarrier) allocated for sending and/or receiving signaling and/or user data for a wireless device. In an example, the frequency resource may comprise/indicate BWP, resource elements (REs) and resource blocks (RBs). In an example, radio bearer resource may indicate resource for a radio bearer. In an example, the radio bearer resource may indicate/comprise time resource and/or frequency resource for the radio bearer. In an example, the radio bearer may comprise signaling radio bearer and/or data radio bearer.

[0454] In an example, the T-(R)AN may perform network slice-aware admission control if the network slice information is received from the S-(R)AN. In an example, if the PDU sessions are associated with non-supported network slices, the T-(R)AN may reject such PDU Sessions. In an example, the T-(R)AN may prepare the handover with layer 1 (L1)/layer 2 (L2). In an example, the T-(R)AN may send a Handover Request Acknowledge message to the S-(R)AN. The Handover Request Acknowledge message may comprise a transparent container to be sent to the Remote UE as an RRC message to perform the handover. The T-(R)AN may indicate if a DAPS handover is accepted or not by the T-(R)AN.

[0455] In an example, as soon as the S-(R)AN receives the Handover Request Acknowledge message, or as soon as the transmission of the handover command is initiated in the downlink, the S-(R)AN may perform data forwarding by forwarding downlink data packets to the T-(R)AN. In an example, for DRBs configured with DAPS, downlink PDCP SDUs may be forwarded with SN assigned by the S-(R)AN, until SN assignment is handed over to the T-(R)AN.

[0456] In an example, a second wireless device (e.g., the Remote UE) may receive a first message (e.g., a RRCReconfiguration, SIB, MIB) from a base station (e.g., the S-(R)AN), the first message/RRCReconfiguration message may indicate a reliable uplink data transmitting/forwarding/relaying. In an example, the first message/RRCReconfiguration message may comprise a parameter (e.g., Reliable UL Data Indication, Reliable Data Forward Indication, Lossless Path Switch Indication) indicating a reliable uplink data transmitting/forwarding/relaying for one or more second wireless devices (e.g., the Remote UE).

[0457] In an example, the first message/RRCReconfiguration message and/or the parameter (e.g., Reliable UL Data Indication, Reliable Data Forward Indication, Lossless Path Switch Indication) may indicate reliable data transmitting/forwarding/relaying between a first node (e.g., a wireless device) and a second node (e.g., a base station, a second wireless device).

[0458] In an example, the reliable uplink data transmitting/forwarding/relaying (and/or reliable data transmitting/forwarding/relaying) may indicate the second wireless device (e.g., the Remote UE) may transmit/forward a plurality of uplink data packets from the second wireless device (e.g., the Remote UE) to a network node (e.g., UPF) via one or more base stations (e.g., the S-(R)AN and/or the T-(R)AN) over an indirect path and/or a direct path without losing at least one of the plurality of (uplink) data packets.

[0459] In an example, the reliable uplink data transmitting/forwarding/relaying (and/or reliable data transmitting/forwarding/relaying) may indicate the second wireless device (e.g., the Remote UE) may transmit/forward a plurality of uplink data packets from the second wireless device (e.g., the Remote UE) to a network node (e.g., UPF) via one or more base stations (e.g., the S-(R)AN and/or the T-(R)AN) over an indirect path and/or a direct path with a configured number of (uplink) data packets lost during the transmitting/forwarding/relaying (e.g., because of handover). For example, the reliable uplink data transmitting/forwarding/relaying (and/or reliable data transmitting/forwarding/relaying) may indicate packet loss rate is lower than a configured number (e.g., 0.01%) (e.g., during a handover). In an example, the packet loss rate may indicate data packets that could not be received by a target (e.g., the base station) comprising packets dropped, packets lost in transmission and/or packets received in wrong format.

[0460] In an example, the reliable uplink data transmitting/forwarding/relaying (and/or reliable data transmitting/forwarding/relaying) may indicate a lossless path switching (e.g., from indirect path to direct path) and/or a lossless handover.

[0461] In an example, the second wireless device (e.g., the Remote UE) may receive the first message (e.g., a RRCReconfiguration) from the base station (e.g., the S-(R)AN) during the establishment of the indirect path and/or before the handover. In an example, the second wireless device (e.g., the Remote UE) may receive the first message (e.g., a RRCReconfiguration) from the base station (e.g., the S-(R)AN) during the handover.

[0462] In an example, the first message/RRCReconfiguration message may comprise configuration parameters indicating RLC Acknowledged Mode (AM) to perform data transfer/receive of RLC data packets. In an example, the first message/RRCReconfiguration message may comprise configuration parameters indicating RLC AM for the PC5 Relay RLC Channel/PC5 RLC between the Relay UE and the Remote UE as shown in FIG. **18** and/or FIG. **19**.

[0463] In an example, the Acknowledged Mode (AM) may indicate a first RLC entity (e.g., RLC entity in a second wireless device) may requires ACK/NACK from a second RLC entity (e.g., RLC entity in a first wireless device). In an example, the configuration parameters of RLC AM may indicate the first wireless device (e.g., the Relay UE) sends an acknowledgement to the second wireless device (e.g., the Remote UE) when receiving an uplink data packet from the second wireless device (e.g., the Remote UE).

[0464] In an example, the base station (e.g., the S-(R)AN) may be configured to RLC AM for the Uu Relay RLC Channel/Uu RLC between the first wireless device (e.g., the Relay UE) and the base station (e.g., the S-(R)AN). For example, the configured RLC AM for the S-(R)AN may indicate the S-(R)AN to send an acknowledgement to the Relay UE when receiving an uplink data packet from the Relay UE.

[0465] In an example, the first message/RRCReconfiguration message may comprise PC5 Relay RLC channel configuration for relay traffic and the associated end-to-end radio bearer(s) between the second wireless device (e.g., the Remote UE) and the base station (e.g., the S-(R)AN).

[0466] In an example, the PC5 Relay RLC channel configuration for relay traffic and the associated end-to-end (Uu) radio bearer(s) may comprise mapping information between the PC5 Relay RLC channel and the associated end-to-end (Uu) radio bearer(s). For example, the PC5 Relay RLC channel configuration for relay traffic and the associated end-to-end (Uu) radio bearer(s) may comprise an identity of a PC5 Relay RLC channel, an identity information of associated Remote UE (e.g., Remote UE's local ID) and/or an identity of each of the associated end-to-end (Uu) radio bearer(s) of the Remote UE. In an example, the mapping information between the PC5 Relay RLC channel and the associated end-to-end (Uu) radio bearer(s) may comprise an identity of a PC5 Relay RLC channel, an identity information of associated Remote UE (e.g., Remote UE's local ID) and/or an identity of each of the associated end-to-end (Uu) radio bearer(s) of the Remote UE.

[0467] In an example, based on the PC5 Relay RLC channel configuration for relay traffic and the associated end-to-end (Uu) radio bearer(s), and/or based on the mapping information between the PC5 Relay RLC channel and the associated end-to-end (Uu) radio bearer(s), the Relay UE may map/associate the PC5 Relay RLC channel to each of the associated end-to-end (Uu) radio bearer(s) of the Remote UE.

[0468] In an example, the end-to-end (Uu) radio bearer(s) may comprise radio bearers for the second wireless device (e.g., the Remote UE). In an example, the end-to-end (Uu) radio bearer(s) may be between the second wireless device (e.g., the Remote UE) and the base station (e.g., the S-(R)AN) via the first wireless device (e.g., the Relay UE). In an example, the end-to-end (Uu) radio bearer(s) may comprise end-to-end (Uu) data radio bearer(s) and/or end-to-end (Uu) signaling radio bearer(s).

[0469] In an example, the PC5 Relay RLC channel may be between the first wireless device (e.g., the Relay UE) and the second wireless device (e.g., the Remote UE). In an example, the PC5 Relay RLC channel may be associated with a PC5 RLC entity of the first wireless device (e.g., the Relay UE) and/or a PC5 RLC entity of the second wireless device (e.g., the Remote UE).

[0470] In an example, the first message/RRCReconfiguration message may comprise a L2 U2N Relay UE ID indicating identity of the first wireless device (e.g., the Relay UE). In an example, the first message/RRCReconfiguration message may comprise a Remote UE's local ID indicating identity of the second wireless device (e.g., the Remote UE).

[0471] In an example, the first wireless device (e.g., the Relay UE) may receive a first message (e.g., a RRCReconfiguration, SIB, MIB) from a base station (e.g., the S-(R)AN), the first message/RRCReconfiguration message may comprise PC5 Relay RLC channel configuration for relay traffic and the associated end-to-end radio bearer(s) between the second wireless device (e.g., the Remote UE) and the base station (e.g., the S-(R)AN). The definition/content of the PC5 Relay RLC channel configuration for relay traffic and the associated end-to-end radio bearer(s) may be similar to (and/or the same as) the definition/content of the PC5 Relay RLC channel configuration for relay traffic and the associated end-to-end radio bearer(s) as described above. In an example, the first message/RRCReconfiguration message may comprise a L2 U2N Relay UE ID indicating identity of the first wireless device (e.g., the Relay UE). In an example, the first message/RRCReconfiguration message may comprise a Remote UE's local ID indicating identity of the second wireless device (e.g., the Remote UE).

[0472] In an example, first message/RRCReconfiguration message may comprise RLC AM for the PC5 Relay RLC Channel/PC5 RLC between the first wireless device (e.g., the Relay UE) and the second wireless device (e.g., the Remote UE). For example, the RLC AM in the first message/RRCReconfiguration message may indicate the Relay UE to send an acknowledgement to the Remote UE when receiving an uplink data packet from the Remote UE.

[0473] In an example, a second wireless device (e.g., the Remote UE) may transmit a plurality of uplink data packets to a UPF via a first wireless device (e.g., the Relay UE) and/or a base station (e.g., the S-(R)AN). In an example, the plurality of uplink data packets is associated with the base station (e.g., the S-(R)AN), e.g., the plurality of uplink data packets is sent to the base station (e.g., the S-(R)AN) over an end-to-end (Uu) data radio bearer(s). In an example, the plurality of uplink data packets may comprise one or more IP packets (e.g., IP packets (1,2,3,4,5,6,7,8,9)), the Remote UE may encapsulate the IP packets into one or more SDAP SDUs/PDUs (as shown in FIG. **20**) (e.g., SDAP PDUs (1,2,3,4,5,6,7,8,9)) and may send the one or more SDAP SDUs/PDUs to the PDCP entity/layer for further process. In an example, the PDCP entity/layer of the Remote UE may encapsulate the received one or more SDAP PDUs into one or more PDCP SDUs/PDUs (e.g., PDCP PDUs (1,2,3,4,5,6,7,8,9)) and send the one or more PDCP SDUs/PDUs to the SRAP entity/layer for further processing.

[0474] In an example, based on the first message/RRCReconfiguration message, based on the PC5 Relay RLC channel configuration for relay traffic and the associated end-to-end (Uu) radio bearer(s), and/or based on the mapping information between the PC5 Relay RLC channel and the associated end-to-end (Uu) radio bearer(s), the SRAP entity/layer of the Remote UE may map the one or more PDCP SDUs/PDUs to a PC5 Relay RLC channel and/or an associated end-to-end (Uu) radio bearer of the Remote UE. In an example, based on the mapping, the SRAP entity/layer may encapsulate the one or more PDCP SDUs/PDUs to one or more SRAP SDUs/PDUs (e.g., SRAP PDUs (1,2,3,4,5,

6,7,8,9)). The one or more SRAP SDUs/PDUs may comprise at least one of: a SRAP header, the one or more PDCP SDUs/PDUs, the Remote UE's local ID, the identity of a PC5 Relay RLC channel, and/or the identity of the associated end-to-end (Uu) radio bearer(s) of the Remote UE. In an example, the SRAP entity/layer may send the one or more SRAP SDUs/PDUs to the RLC entity/layer. In an example, the RLC entity/layer of the Remote UE may encapsulate the one or more SRAP SDUs/PDUs (and/or PDCP SDUs/PDUs) into one or more RLC SDUs/PDUs (e.g., RLC PDUs (1,2,3,4,5,6,7,8,9)). In an example, the RLC entity/layer may segment the SRAP SDUs/PDUs (and/or PDCP SDUs/PDUs) when encapsulating/creating RLC SDUs/PDUs. For example, the RLC entity/layer may segment each of the SRAP SDUs/PDUs (and/or PDCP SDUs/PDUs) into 2 RLC SDUs/PDUs (e.g., RLC PDUs (1-1,1-2,2-1,2-2,3-1,3-2,4-1,4-2,5-1,5-2,6-1,6-2,7-1,7-2,8-1,8-2,9-1,9-2)). In an example, the RLC entity/layer of the Remote UE may send the one or more RLC SDUs/PDUs (e.g., RLC PDUs (1,2,3,4,5,6,7,8,9)) to the MAC entity/layer for further processing. The MAC entity/layer of the Remote UE may encapsulate the one or more RLC SDUs/PDUs (e.g., RLC PDUs (1,2,3,4,5,6,7,8,9)) into one or more MAC PDUs and may send the one or more MAC PDUs to the PHY entity/layer. The PHY entity/layer of the Remote UE may send the one or more MAC PDUs to the first wireless device (e.g., the Relay UE) over the PC5 Relay RLC Channel.

[0475] In an example, first wireless device (e.g., the Relay UE) may receive a plurality of uplink data packets from a second wireless device (e.g., the Remote UE), where the plurality of uplink data packets is associated with (and/or sent to) the base station (e.g., the S-(R)AN).

[0476] In an example, the plurality of uplink data packets may comprise plurality of uplink RLC data packets (e.g., RLC PDUs (1,2,3,4,5,6)). In an example, the plurality of uplink RLC data packets (e.g., RLC PDUs (1,2,3,4,5,6)) comprises plurality of SRAP PDUs (1,2,3,4,5,6). In an example, an PC5 RLC entity/layer of the Relay UE may send the received plurality of uplink RLC data packets (e.g., RLC PDUs (1,2,3,4,5,6)) to the SRAP entity/layer of the Relay UE for further processing.

[0477] In an example, based on the first message, based on the PC5 Relay RLC channel configuration for relay traffic and the associated end-to-end (Uu) radio bearer(s), based on the mapping information between the PC5 Relay RLC channel and the associated end-to-end (Uu) radio bearer(s), and/or based on the information of the plurality of SRAP PDUs (1,2,3,4,5,6) (e.g., header of SRAP, the Remote UE's local ID, the identity of a PC5 Relay RLC channel, and/or the identity of the associated end-to-end (Uu) radio bearer of the Remote UE), the SRAP entity/layer of the Relay UE may map the plurality of SRAP PDUs (1,2,3,4,5,6) to a Uu Relay RLC channel and/or an associated base station (e.g., the S-(R)AN). In an example, the SRAP entity/layer of the Relay UE may transmit/relay/forward the plurality of RLC PDUs (1,2,3,4,5,6) to an Uu RLC entity/layer of the Relay UE, wherein the Uu RLC entity/layer is associated with the PC5 Relay RLC channel and/or the associated end-to-end (Uu) radio bearer of the Remote UE. In an example, the Uu RLC entity/layer of the Relay UE may encapsulate the one or more plurality of SRAP SDUs/PDUs into plurality of RLC SDUs/PDUs (e.g., RLC PDUs (1,2,3,4,5,6)). The Uu RLC entity/layer of the Relay UE may send the plurality of RLC SDUs/PDUs to the MAC entity/layer and/or PHY entity/layer of the Relay UE, and the PHY entity/layer of the Relay UE may transmit the RLC PDUs (1,2,3,4,5,6) to the S-(R)AN.

[0478] In an example, the first wireless device (e.g., the Relay UE) may send the plurality of uplink data packets (e.g., the plurality of RLC SDUs/PDUs (e.g., RLC PDUs (1,2,3,4,5,6)) to the base station (e.g., the S-(R)AN) via the Uu Relay RLC channel.

[0479] In an example, in response to receiving the plurality of uplink data packets, the first wireless device may send one or more first acknowledgements of the plurality of uplink data packets to the Remote UE, the one or more first acknowledgements of the plurality of uplink data packets may indicate whether the first wireless device has received the plurality of uplink data packets from the second wireless device or not. For example, the Relay UE may send a first RLC STATUS PDU to the Remote UE, wherein the first RLC STATUS PDU may comprise an ACK_SN field, and the ACK_SN field may be set to 7 indicating the Relay UE has received the RLC PDUs (1,2,3,4,5,6) from the Remote UE successfully. In an example, the first RLC STATUS PDU may comprise a NACK_SN field indicating the Relay UE has not received the RLC PDUs (7,8,9).

[0480] In an example, each of the one or more first acknowledgements of the plurality of uplink data packets may be associated with each of the plurality of uplink data packets. For example, the first RLC STATUS PDU may be associated with the RLC PDUs (1,2,3,4,5,6) received from the Remote UE. In an example, each of the one or more first acknowledgements may indicate each of the plurality of uplink data packets has been received successfully from the Remote UE. For example, the first RLC STATUS PDU may indicate that RLC PDUs (1), RLC PDUs (2), RLC PDUs (3), RLC PDUs (4), RLC PDUs (5) and/or RLC PDUs (6) have been received by the Relay UE successfully. In an example, each of the one or more first acknowledgements may indicate each of the plurality of uplink data packets has not been received by the Relay UE. For example, the first RLC STATUS PDU may indicate that RLC PDUs (7,8,9) has not been received by the Relay UE.

[0481] In an example, in response to the one or more first acknowledgements received, the second wireless device may take one or more actions. For example, the RLC entity/layer of the Remote UE may receive the one or more first acknowledgements (e.g., the first RLC STATUS PDU) from the RLC entity/layer of the Relay UE, and the first RLC STATUS PDU may indicate the Relay UE has received the RLC PDUs (1,2,3) from the Remote UE successfully. In an example, the RLC entity/layer of the Remote UE may indicate to the PDCP entity/layer of the Remote UE that the PDCP PDUs (1,2,3,4,5,6) have been received by the peer PDCP entity (e.g., PDCP entity of the S-(R)AN).

[0482] In an example, based on the first message/RRCReconfiguration message and/or the parameter (e.g., Reliable UL Data Indication, Reliable Data Forward Indication, Lossless Path Switch Indication), the first wireless device may determine to buffer all uplink data packets. For example, the first message/RRCReconfiguration message and/or the parameter (e.g., Reliable UL Data Indication, Reliable Data Forward Indication, Lossless Path Switch Indication) may indicate reliable data transmitting/forwarding/relaying between the Remote UE and the S-(R)AN, based on the first message/RRCReconfiguration message and/or the parameter (e.g., Reliable UL Data Indication,

Reliable Data Forward Indication, Lossless Path Switch Indication), the first wireless device may determine to buffer all uplink data packets (e.g., during the handover). In an example, based on the determine, the PDCP entity/layer of the Remote UE may keep buffering the uplink data packets. The PDCP entity/layer of the Remote UE may keep the PDCP PDUs (1,2,3,4,5,6) in the buffer and may not remove/discard the PDCP PDUs (1,2,3,4,5,6) from the buffer even it has received the one or more first acknowledgements indicating the PDCP PDUs (1,2,3,4,5,6) have been received by the Relay UE.

[0483] In an example, the base station (e.g., S-(R)AN) may receive one or more of the plurality of uplink data packets (e.g., the plurality of RLC SDUs/PDUs) from the first wireless device (e.g., the Relay UE). For example, the RLC entity/layer of the S-(R)AN may receive RLC PDUs (1,2,3) from the Relay UE, where the RLC PDUs (1,2,3) may comprise SRAP PDUs (1,2,3). In an example, based on the information in the SRAP PDUs (e.g., the Remote UE's local ID, the identity of a PC5 Relay RLC channel, and/or the identity of the associated end-to-end (Uu) radio bearer(s) of the Remote UE), the SRAP entity/layer of the S-(R)AN may map the SRAP PDUs (1,2,3) to a PDCP entity/layer of the S-(R)AN, where the PDCP entity/layer of the S-(R)AN is associated with the Remote UE and/or an end-to-end (Uu) radio bearer(s) of the Remote UE. The SRAP entity may decapsulate the SRAP PDUs (1,2,3) to PDCP PDUs (1,2,3). In an example, the SRAP entity/layer of the S-(R)AN may send the PDCP PDUs (1,2,3) to the PDCP entity/layer of the S-(R)AN.

[0484] In an example, the first wireless device (e.g., Relay UE) may receive one or more second acknowledgements of the plurality of uplink data packets from the base station (e.g., S-(R)AN). For example, based on the configuration of RLC AM, the RLC entity/layer of the S-(R)AN may send a second acknowledgement message (e.g., a second RLC STATUS PDU) to the RLC entity/layer of the Relay UE indicating the S-(R)AN has received the RLC PDUs (1,2,3) successfully. For example, the RLC entity/layer of the S-(R)AN may send a second RLC STATUS PDU to the (Uu) RLC entity/layer of the Relay UE over Uu Relay RLC Channel, wherein the second RLC STATUS PDU may comprise an ACK_SN setting to 4 indicating the S-(R)AN has received the RLC PDUs (1,2,3) successfully. In an example, the second RLC STATUS PDU may comprise one or more NACK_SNs indicating RLC PDUs (4,5,6) have not been received by the S-(R)AN.

[0485] In an example, each of the one or more second acknowledgements of the plurality of uplink data packets may be associated with each of the plurality of uplink data packets. For example, the second RLC STATUS PDU may be associated with the RLC PDUs (1,2,3) received from the Relay UE. In an example, each of the one or more second acknowledgements may indicate each of the plurality of uplink data packets has been received successfully from the Relay UE. For example, the second RLC STATUS PDU may indicate that RLC PDUs (1), RLC PDUs (2) and/or RLC PDUs (3), have been received by the S-(R)AN successfully. In an example, each of the one or more second acknowledgements may indicate each of the plurality of uplink data packets has not been received by the S-(R)AN. For example, the second RLC STATUS PDU may indicate that RLC PDUs (4,5,6) has not been received by the S-(R)AN.

[0486] In an example, the S-(R)AN may trigger Uu handover by sending an RRCReconfiguration message to the Remote UE. The RRCReconfiguration message may comprise the information required to access the target cell (e.g., T-(R)AN), e.g., at least the target cell ID, the new Radio Network Temporary Identifier (C-RNTI), and/or the T-(R)AN security algorithm identifiers for the selected security algorithms. In an example, the RRCReconfiguration message may comprise a set of dedicated Random Access Channel (RACH) resources, the association between RACH resources and SSB(s), the association between RACH resources and UE-specific CSI-RS configuration(s), common RACH resources, and/or system information of the target cell, etc.

[0487] In an example, for DRBs configured with DAPS, the S-(R)AN may not stop transmitting downlink packets until it receives the HANDOVER SUCCESS message from the T-(R)AN. In an example, CHO may not be configured simultaneously with DAPS handover. In an example, for DRBs configured with DAPS, the S-(R)AN may send the EARLY STATUS TRANSFER message. The DL COUNT value conveyed in the EARLY STATUS TRANSFER message may indicate PDCP SN and Hyper Frame Number (HFN) of the first PDCP SDU that the S-(R)AN forwards to the T-(R)AN. The S-(R)AN may not stop assigning SNs to downlink PDCP SDUs until it sends the SN STATUS TRANSFER message to the T-(R)AN.

[0488] In an example, for DRBs not configured with DAPS, the S-(R)AN may send SN STATUS TRANSFER message to the T-(R)AN to convey the uplink PDCP SN receiver status and the downlink PDCP SN transmitter status of DRBs for which PDCP status preservation applies (e.g., for RLC AM). The uplink PDCP SN receiver status may comprise at least the PDCP SN of the first missing UL PDCP SDU and may comprise a bit map of the receive status of the out of sequence UL PDCP SDUs that the UE (e.g., Remote UE) needs to retransmit in the target cell, if any. The downlink PDCP SN transmitter status may indicate the next PDCP SN that the T-(R)AN may assign to new PDCP SDUs, not having a PDCP SN yet.

[0489] In an example, in case of DAPS handover, the uplink PDCP SN receiver status and the downlink PDCP SN transmitter status for a DRB with RLC-AM and not configured with DAPS may be transferred by the SN STATUS TRANSFER message. In an example, for DRBs configured with DAPS, the S-(R)AN may additionally send the EARLY STATUS TRANSFER message(s), to inform discarding of already forwarded PDCP SDUs. The T-(R)AN may not transmit forwarded downlink PDCP SDUs to the Remote UE, whose COUNT is less than the conveyed DL COUNT value and discards them if transmission has not been attempted already.

[0490] In an example, the Remote UE may synchronise to the target cell (e.g., T-(R)AN). In an example, the Remote UE may perform Random Access (RA) procedure to access to the T-(R)AN. In an example, the S-(R)AN may forward undelivered/unreceived PDCP PDUs to the T-(R)AN.

[0491] In an example, the Remote UE may complete the RRC handover procedure by sending RRCReconfigurationComplete message to the T-(R)AN. In case of DAPS handover, the Remote UE may not detach from the source cell (e.g., S-(R)AN) upon receiving the RRCReconfiguration message. The Remote UE may release the source resources

and configurations and stops DL/UL reception/transmission with the source upon receiving an explicit release from the target node (e.g., T-(R)AN).

[0492] In an example, in case of DAPS handover, the T-(R)AN may send the HANDOVER SUCCESS message to the S-(R)AN to inform that the UE has successfully accessed the target cell. In return, the S-(R)AN may send the SN STATUS TRANSFER message for DRBs configured with DAPS. In an example, for DRBs configured with DAPS, the S-(R)AN may not stop delivering uplink QoS flows to the UPF until it sends the SN STATUS TRANSFER message to the T-(R)AN. The T-(R)AN may not forward QoS flows of the uplink PDCP SDUs successfully received in-sequence to the UPF until it receives the SN STATUS TRANSFER message, in which UL HFN and the first missing SN in the uplink PDCP SN receiver status indicates the start of uplink PDCP SDUs to be delivered to the UPF. The T-(R)AN may not deliver any uplink PDCP SDUs which has an UL COUNT lower than the provided.

[0493] In an example, the T-(R)AN may send a PATH SWITCH REQUEST message to an AMF to trigger 5GC to switch the DL data path towards the T-(R)AN and to establish an NG-C interface instance towards the T-(R)AN. In an example, the 5GC may switch the DL data path towards the T-(R)AN. The UPF may send one or more "end marker" packets on the old path to the S-(R)AN per PDU session/tunnel and then can release any U-plane/TNL resources towards the S-(R)AN. In an example, the AMF may confirm the PATH SWITCH REQUEST message with the PATH SWITCH REQUEST ACKNOWLEDGE message.

[0494] Upon reception of the PATH SWITCH REQUEST ACKNOWLEDGE message from the AMF, the T-(R)AN may send UE CONTEXT RELEASE to inform the S-(R)AN about the success of the handover. The S-(R)AN may release radio and C-plane related resources associated to the Remote UE context. Any ongoing data forwarding may continue.

[0495] In an example, the T-(R)AN may send a RRCReconfiguration message to the Relay UE to reconfigure the connection between the Relay UE and the S-(R)AN. The RRCReconfiguration message may indicate the Relay UE to release Uu and PC5 Relay RLC channel configuration for relaying, and bearer mapping configuration related to the Remote UE. In an example, either Relay UE or Remote UE's AS layer may release PC5-RRC connection and may indicate upper layers to release PC5 unicast link after receiving the RRCReconfiguration message from the T-(R)AN. The timing to execute link release is up to UE implementation.

[0496] In an example, during the handover, the second wireless device may send a message to the first base station may querying PDCP SN number. For example, the Remote UE may send a RRCReconfiguration message to the S-(R)AN via the Relay UE. The RRCReconfiguration message may comprise a parameter (e.g., statusReportRequired) requesting the S-(R)AN to provide a PDCP Status report.

[0497] In response to the message received, the S-(R)AN may send a PDCP Status report to the Remote UE. The PDCP Status report may indicate PDCP PDUs/SDUs that have not been received by the S-(R)AN. For example, the PDCP Status report may indicate that PDCP PDUs/SDUs (1,2,3) have been received by the S-(R)AN successfully. For example, the PDCP Status report may indicate that PDCP PDUs/SDUs (4,5,6) have not been received by the S-(R)AN, and/or the SN of next expected receiving PDCP PDUs/SDUs is 4.

[0498] In an example, based on the PDCP Status report, the second wireless device may transmit one or more of the plurality of uplink data packets to a second base station and/or a first base station, wherein the one or more of the plurality of uplink data packets have not been received/acknowledged by the first base station. For example, the Remote UE may transmit the uplink data packets (4,5,6,7,8,9) to the T-(R)AN and/or the S-(R)AN during the handover, where the uplink data packets (4,5,6,7,8,9) have not been received/acknowledged by the S-(R)AN. In an example, the T-(R)AN and/or the S-(R)AN may forward/relay/transmit the uplink data packets (4,5,6,7,8,9) to the UPF.

[0499] In an example, the second wireless device may transmit all buffered one or more of the plurality of uplink data packets to a second base station. For example, the Remote UE may transmit all buffered uplink data packets (1,2,3,4,5,6,7,8,9) to the T-(R)AN during the handover and/or after the handover. In an example, the T-(R)AN may forward/relay/transmit the uplink data packets (1,2,3,4,5,6,7,8,9) to the UPF.

1. A first wireless device comprising one or more processors and memory storing instructions that, when executed by the one or more processors, cause the first wireless device to:

receive, from a base station, a first message indicating to relay one or more downlink data packets associated with a second wireless device; and

transmit, to the base station, one or more first acknowledgements of the one or more downlink data packets.

2. The first wireless device of claim **1**, wherein the instructions further cause the first wireless device to receive, from the second wireless device, one or more second acknowledgements of the one or more downlink data packets.

3. The first wireless device of claim **2**, wherein transmitting the one or more first acknowledgements is based on:

the first message; and

the one or more second acknowledgements.

4. The first wireless device of claim **2**, wherein the one or more second acknowledgements of the one or more downlink data packets indicates whether one or more of the second wireless device and the first wireless device received the one or more downlink data packets from the base station.

5. The first wireless device of claim **2**, wherein each of the one or more second acknowledgements of the one or more downlink data packets is associated with each of the one or more downlink data packets.

6. The first wireless device of claim **5**, wherein each of the one or more second acknowledgements indicate each of the one or more downlink data packets has been received successfully.

7. The first wireless device of claim **5**, wherein each of the one or more second acknowledgements indicate each of the one or more downlink data packets has not been received successfully.

8. A base station comprising one or more processors and memory storing instructions that, when executed by the one or more processors, cause the base station to:

transmit, to a first wireless device, a first message indicating to relay one or more downlink data packets of a second wireless device; and

receive, from the first wireless device, one or more first acknowledgements of the one or more downlink data packets.

9. The base station of claim **8**, wherein the first wireless device receives from the second wireless device one or more second acknowledgements of the one or more downlink data packets.

10. The base station of claim **9**, wherein each of the one or more second acknowledgements of the one or more downlink data packets is associated with each of the one or more downlink data packets.

11. The base station of claim **9**, wherein the first wireless device receives the one or more first acknowledgements based on:

the first message; and

the one or more second acknowledgements.

12. The base station of claim **9**, wherein each of the one or more second acknowledgements indicate each of the one or more downlink data packets has been received successfully.

13. The base station of claim **9**, wherein each of the one or more second acknowledgements indicate each of the one or more downlink data packets has not been received successfully.

14. The base station of claim **8**, wherein the instructions further cause the base station to transmit, to the first wireless device, one or more downlink data packets associated with the second wireless device, wherein the first wireless device receives from the second wireless device the one or more downlink data packets and transmits the one or more downlink data packets based on the first message.

15. A non-transitory computer readable medium comprising instructions that, when executed by one or more processors of a first wireless device, cause the first wireless device to:

receive, from a base station, a first message indicating to relay one or more downlink data packets associated with a second wireless device; and

transmit, to the base station, one or more first acknowledgements of the one or more downlink data packets.

16. The non-transitory computer readable medium of claim **15**, wherein the instructions further cause the first wireless device to receive, from the second wireless device, one or more second acknowledgements of the one or more downlink data packets.

17. The non-transitory computer readable medium of claim **16**, wherein transmitting the one or more first acknowledgements is based on:

the first message; and

the one or more second acknowledgements.

18. The non-transitory computer readable medium of claim **16**, wherein the one or more second acknowledgements of the one or more downlink data packets indicates whether one or more of the second wireless device and the first wireless device received the one or more downlink data packets from the base station.

19. The non-transitory computer readable medium of claim **16**, wherein each of the one or more second acknowledgements of the one or more downlink data packets is associated with each of the one or more downlink data packets.

20. The non-transitory computer readable medium of claim **19**, wherein each of the one or more second acknowledgements indicate each of the one or more downlink data packets has been received successfully.

* * * * *