US 20250257977A1

(19) United States

(12) Patent Application Publication

Pestrue et al.

(10) Pub. No.: US 2025/0257977 A1

(43) Pub. Date: Aug. 14, 2025

(54) **CROSSBOW CRANK AND RELATED METHOD OF USE**

(71) Applicant: **Killer Instinct, Inc.**, Milwaukee, WI (US)

(72) Inventors: **Jeffrey A. Pestrue**, St. Louis, MI (US); **David McNeil**, Grant, MI (US)

(21) Appl. No.: **18/767,264**

(22) Filed: **Jul. 9, 2024**

**Related U.S. Application Data**

(63) Continuation-in-part of application No. 18/441,530, filed on Feb. 14, 2024.

**Publication Classification**

(51) **Int. Cl.**
*F41B 5/12* (2006.01)

(52) **U.S. Cl.**
CPC ..... ***F41B 5/1469*** (2013.01); ***F41B 5/123*** (2013.01)

(57) **ABSTRACT**

A crossbow crank can comprise a drive shaft selectively coupled to a one-way bearing that allows rotation of the drive shaft and an associated spool in a first direction and impairs rotation of the drive shaft and the spool in a second direction. The drive shaft can be automatically locked and unlocked relative to the one-way bearing, allowing the bearing to control operation of the drive shaft, via an axially compressible brake. The crossbow crank can be in the form of a removeable and replaceable module that can be positioned on right or left sides of a crossbow for right or left sided operation. A related method of use is provided.

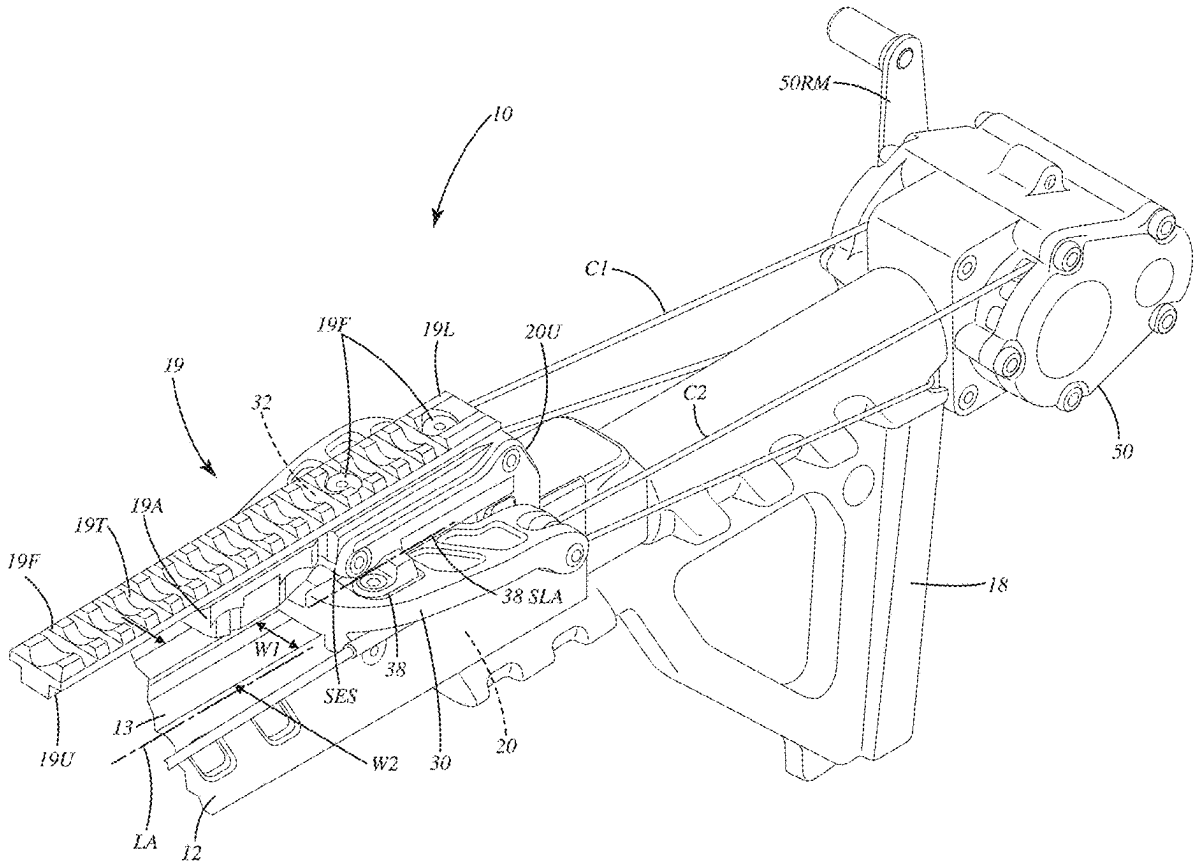

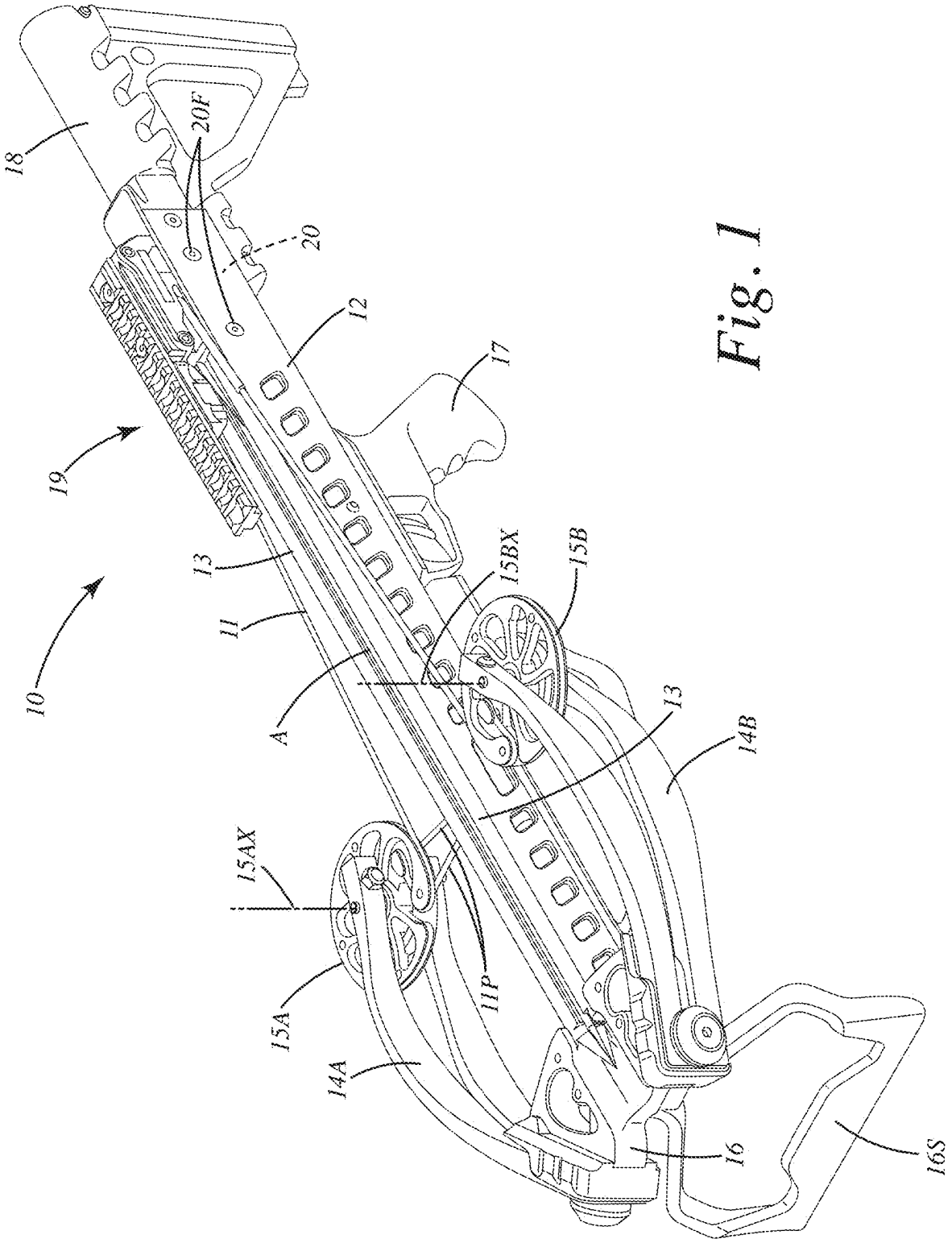
18
20F
20
12
17
19
13
11
10
A
15BX
15B
13
14B
15AX
11P
15A
14A
16
16S

Fig. 1

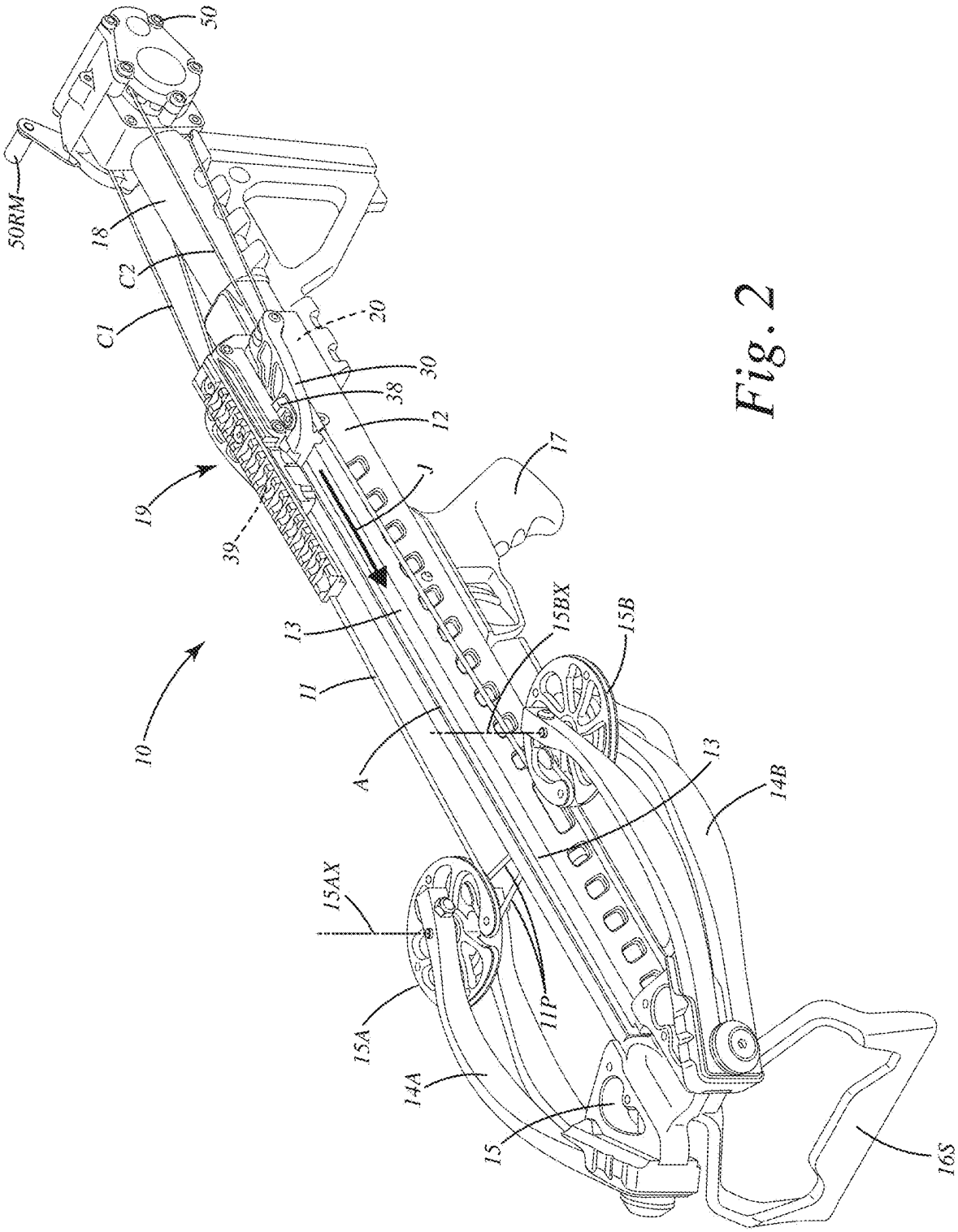
50
50RM
18
C2
C1
20
30
38
12
17
J
19
39
13
11
10
A
15BX
15B
13
14B
15AX
11P
15A
14A
15
16S

Fig. 2

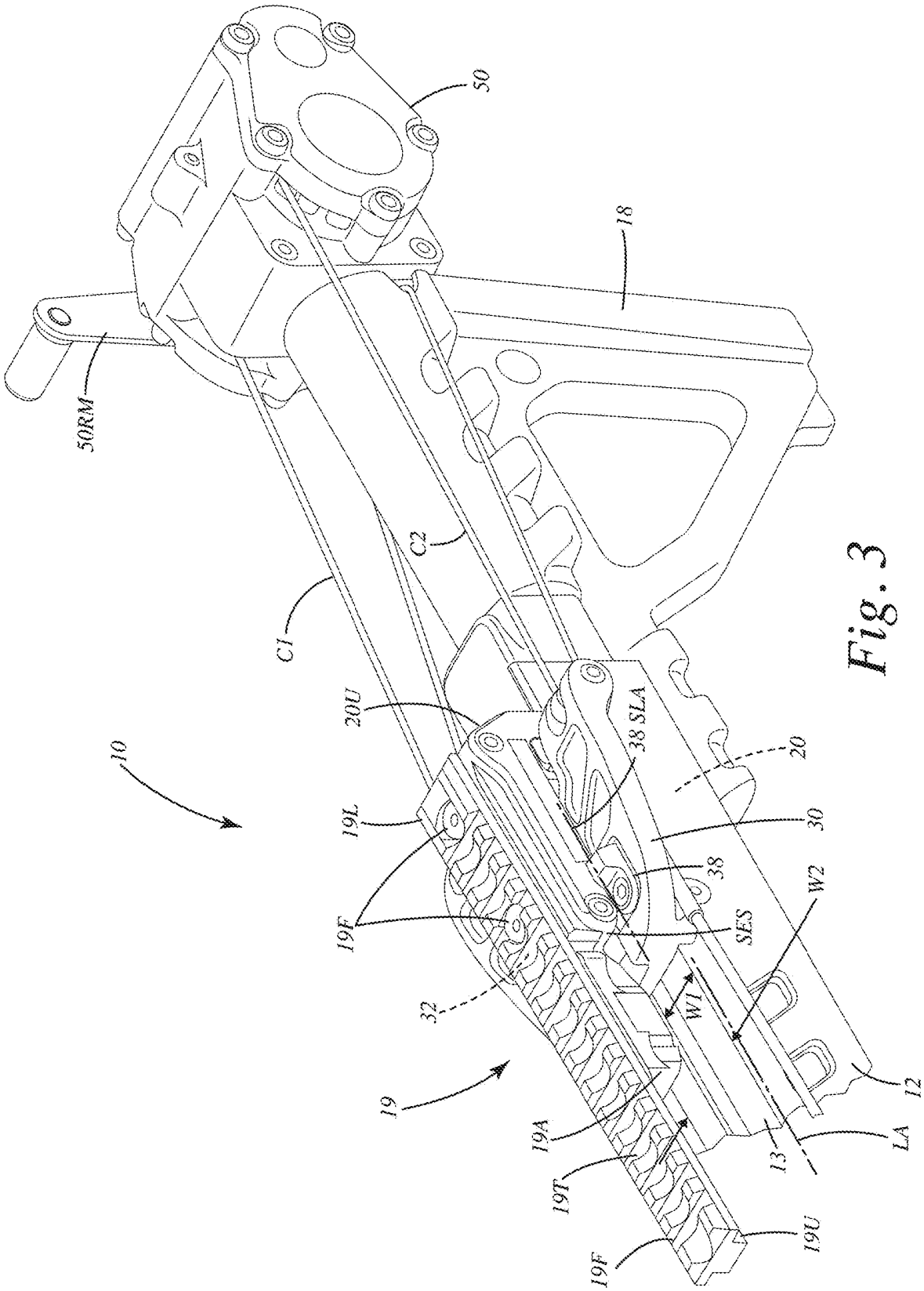
50
18
50RM
C2
C1
20U
38 SLA
10
20
19L
30
38
19F
W2
SES
32
W1
19
12
19A
LA
13
19T
19U
19F

Fig. 3

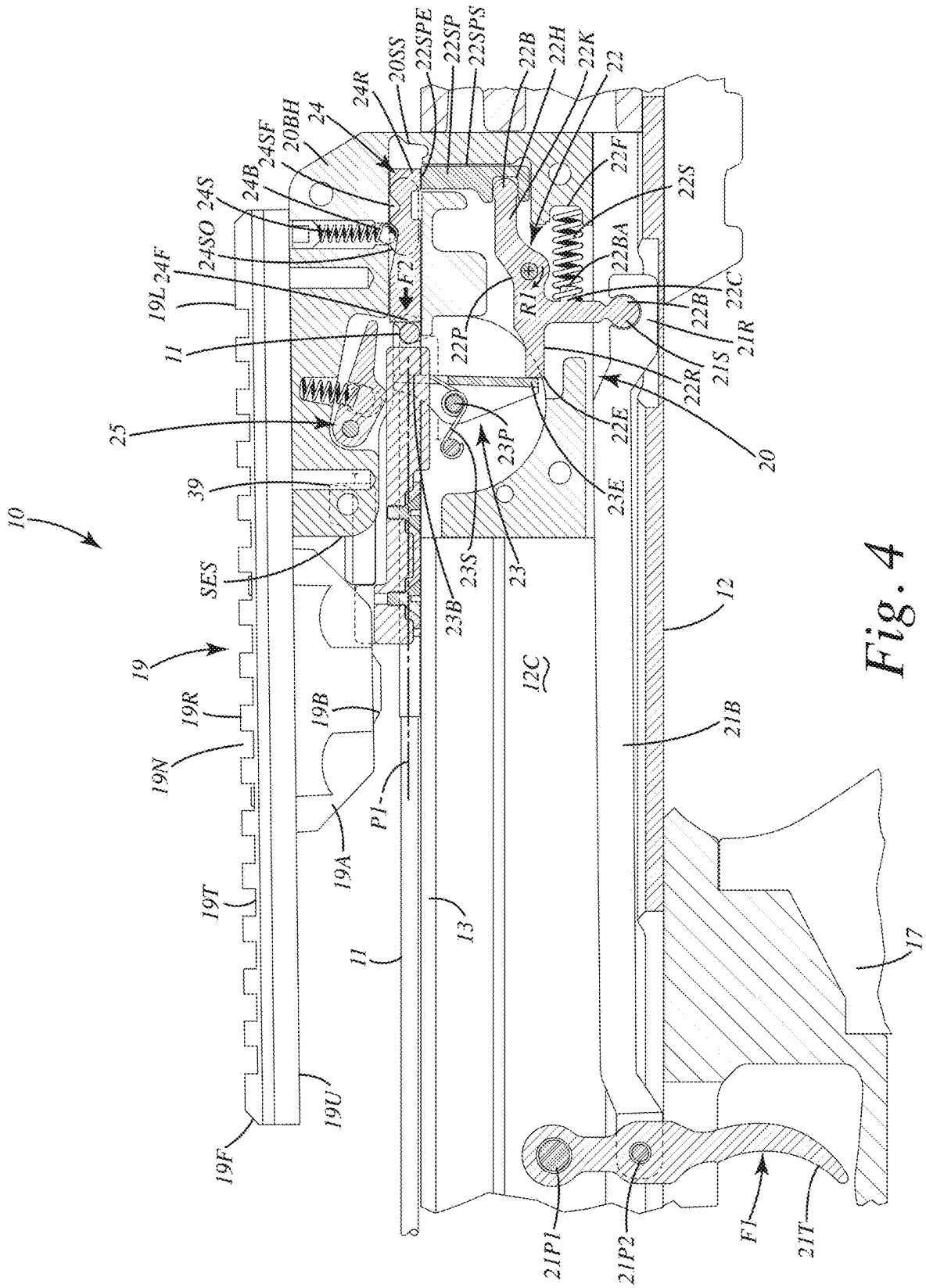
10
19L
24F
24SO
24S
24B
24SF
20BH
24
24R
20SS
22SPE
22SP
22SPS
22B
22H
22K
22
22F
22S
22BA
R1
F2
22P
11
25
39
SES
19
19R
19N
19T
19F
19U
19A
19B
P1
11
13
12C
23B
23S
23
23P
23E
22E
22R
20
21S
21R
22C
22B
12
21B
17
21P1
21P2
F1
21T

Fig. 4

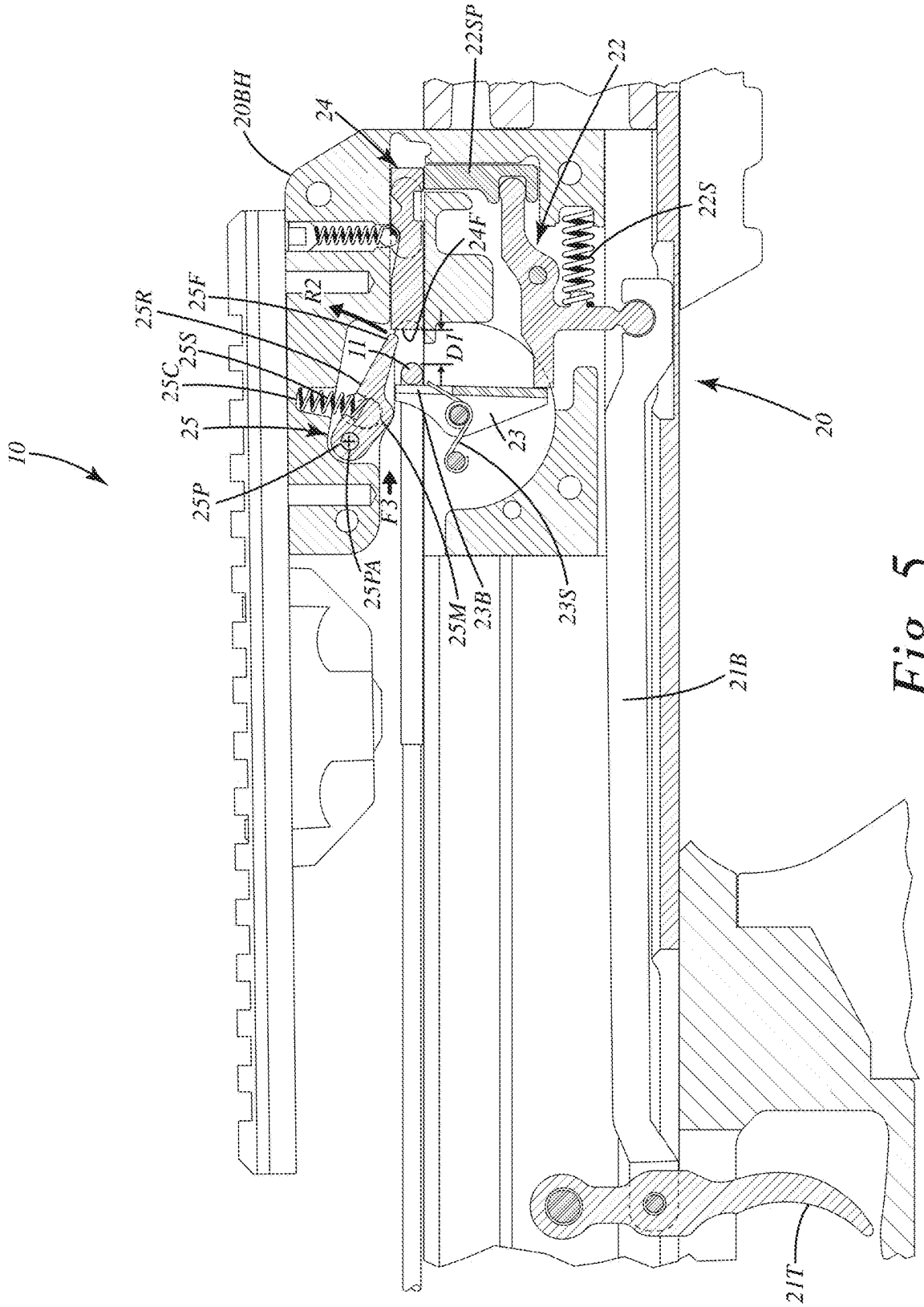
10
20BH
24
22SP
22
22S
24F
25R
25F
R2
11
D1
25S
25C
25
25P
F3
25PA
25M
23B
23
23S
20
21B
21T

Fig. 5

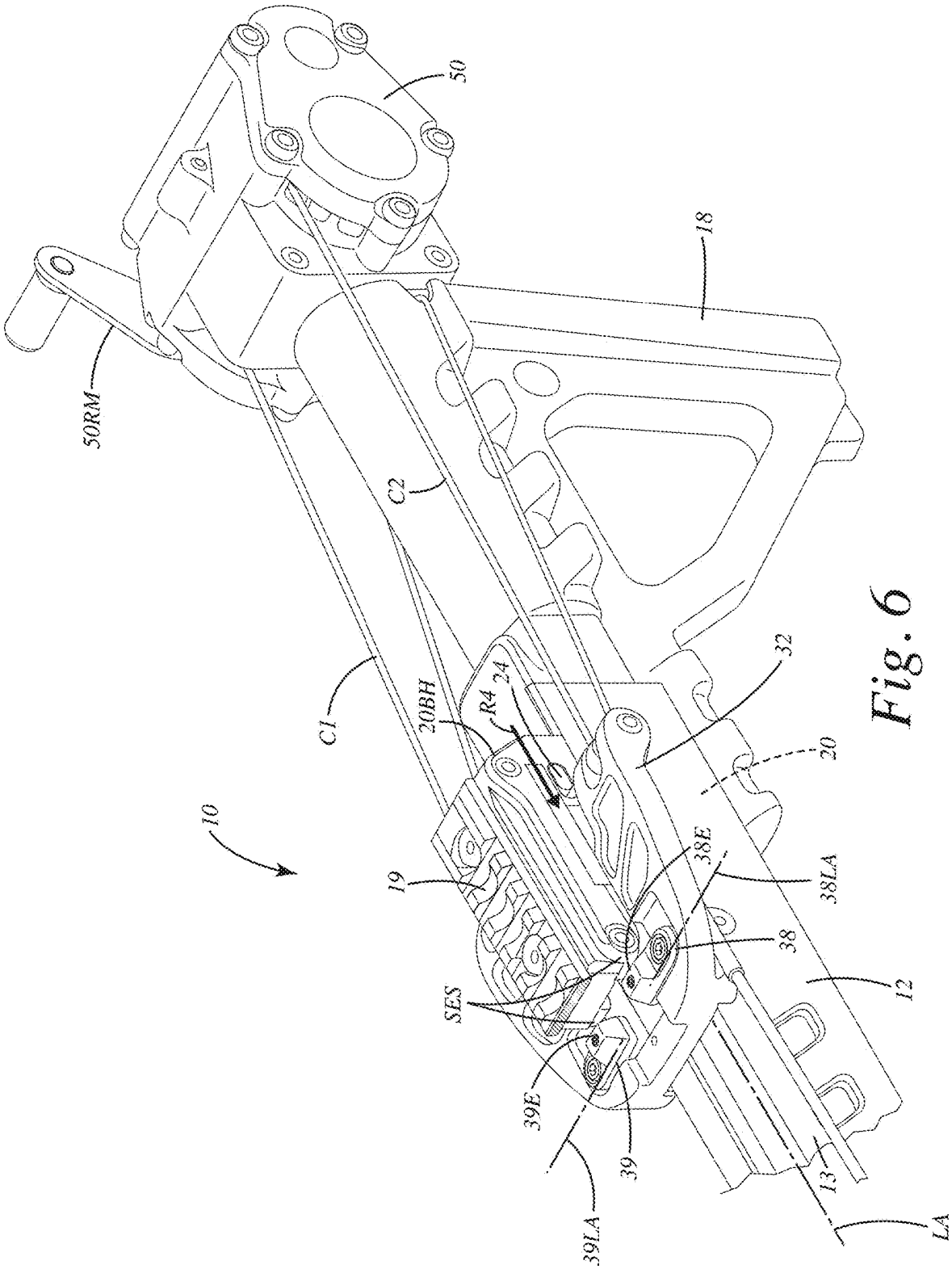
50
18
50RM
C2
C1
20BH
R4
24
32
20
10
19
38E
38LA
38
12
SES
39E
39
39LA
13
LA

Fig. 6

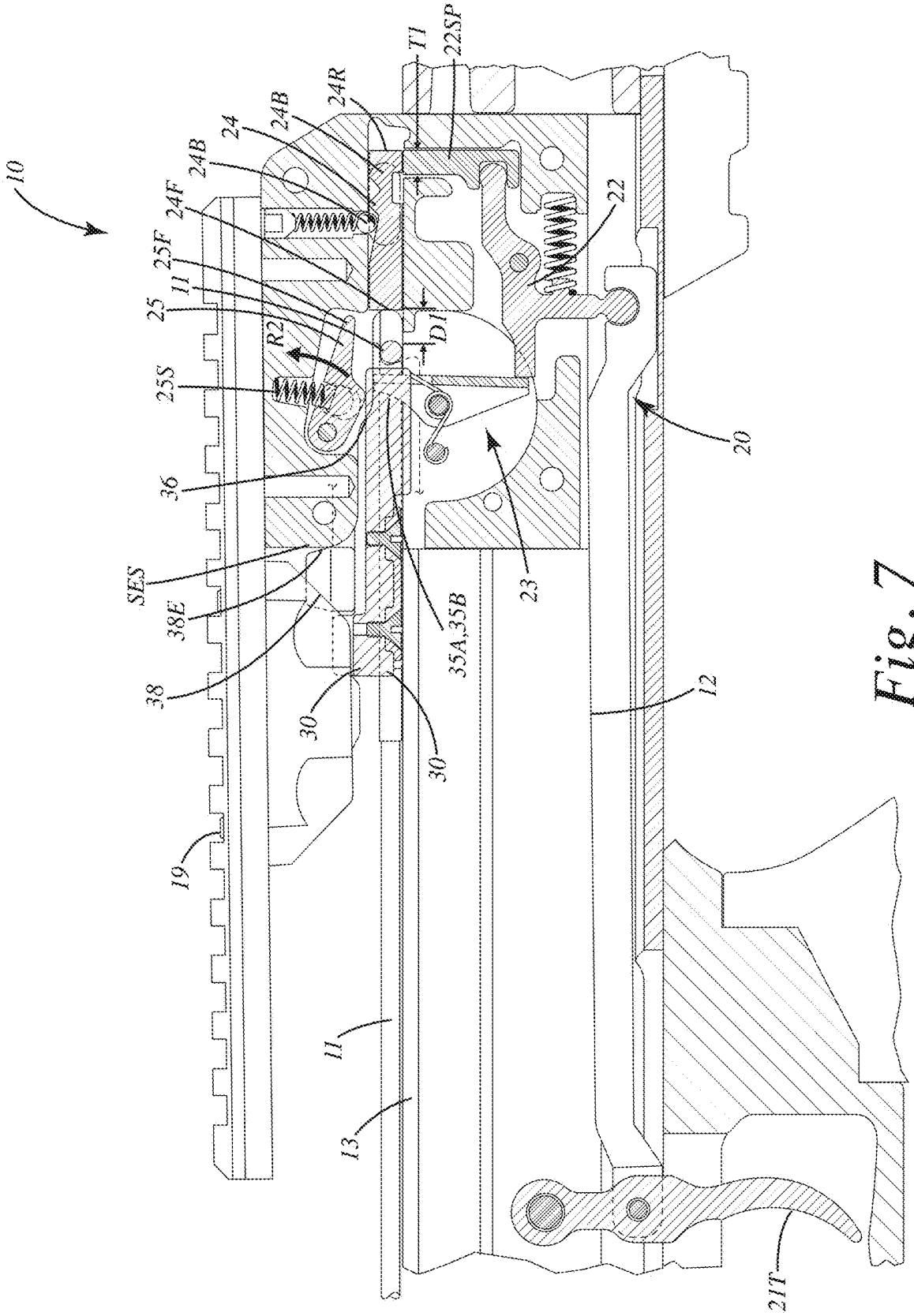
10
24R
24B
24
24B
24F
25F
11
25
R2
25S
36
SES
38E
38
19
11
13
T1
22SP
22
D1
20
23
35A,35B
30
30
12
21T

Fig. 7

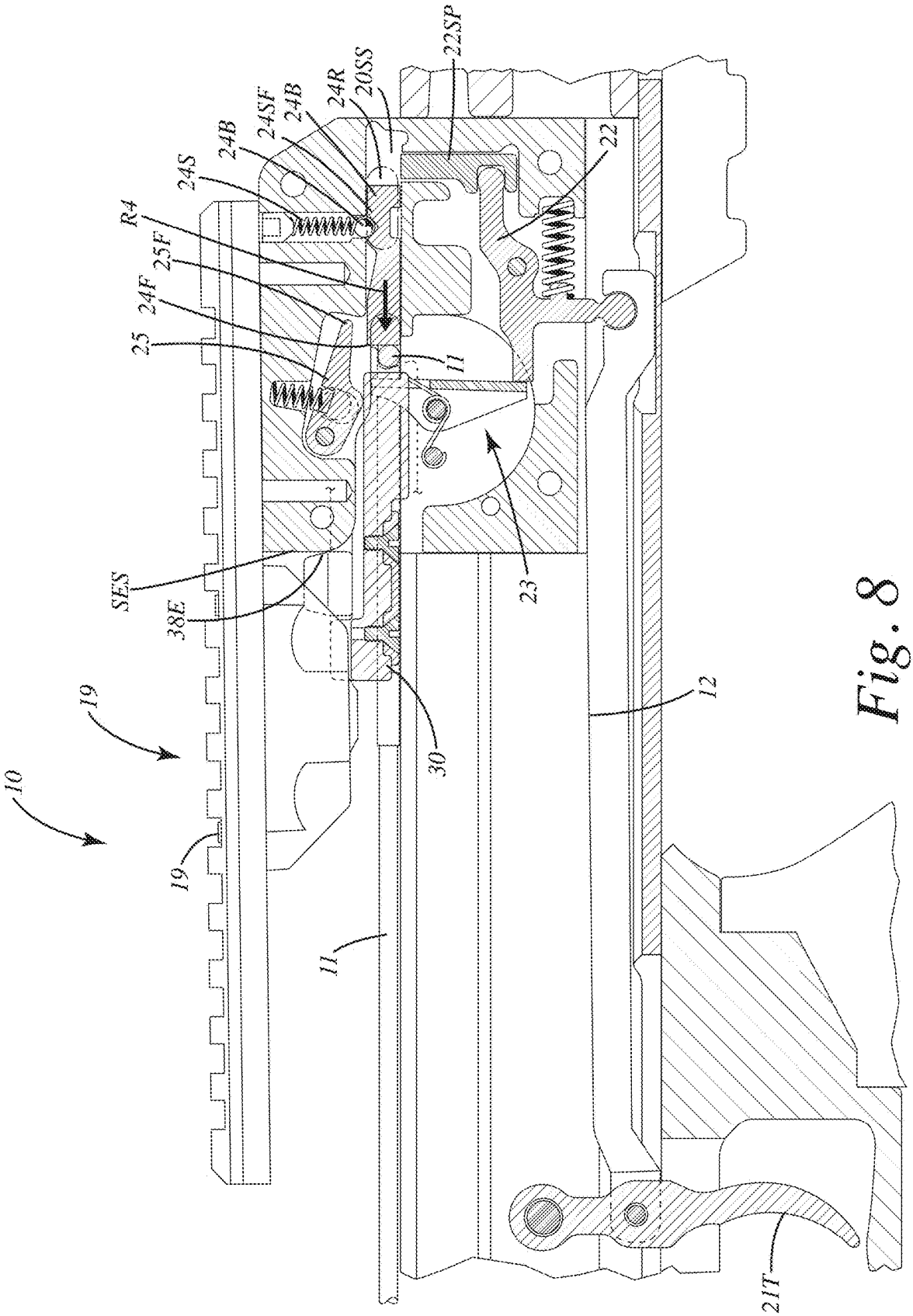
10
19
19
SES
38E
R4
25F
24F
25
24S
24B
24SF
24B
24R
20SS
22SP
22
11
23
30
11
12
21T

Fig. 8

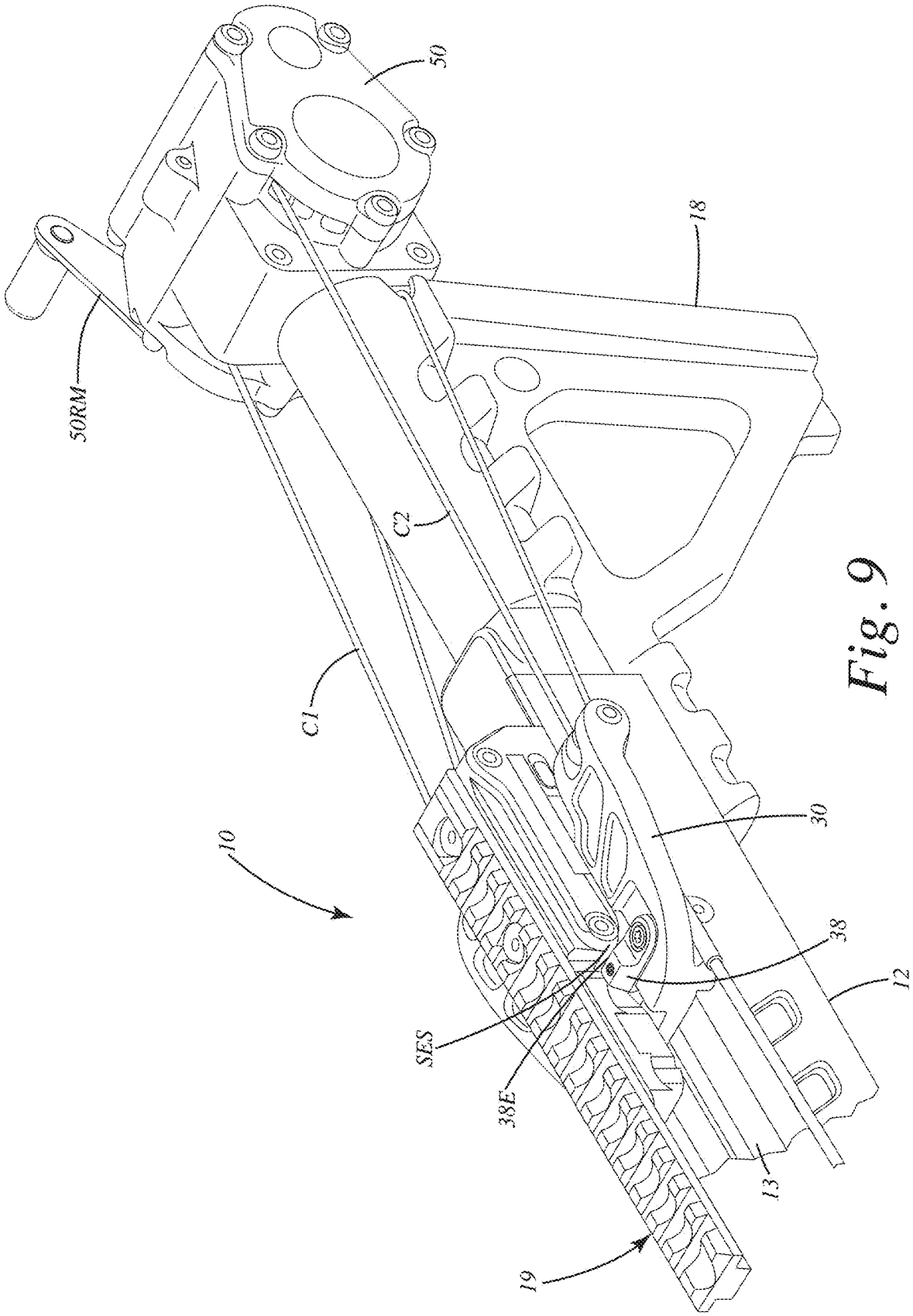


Fig. 9

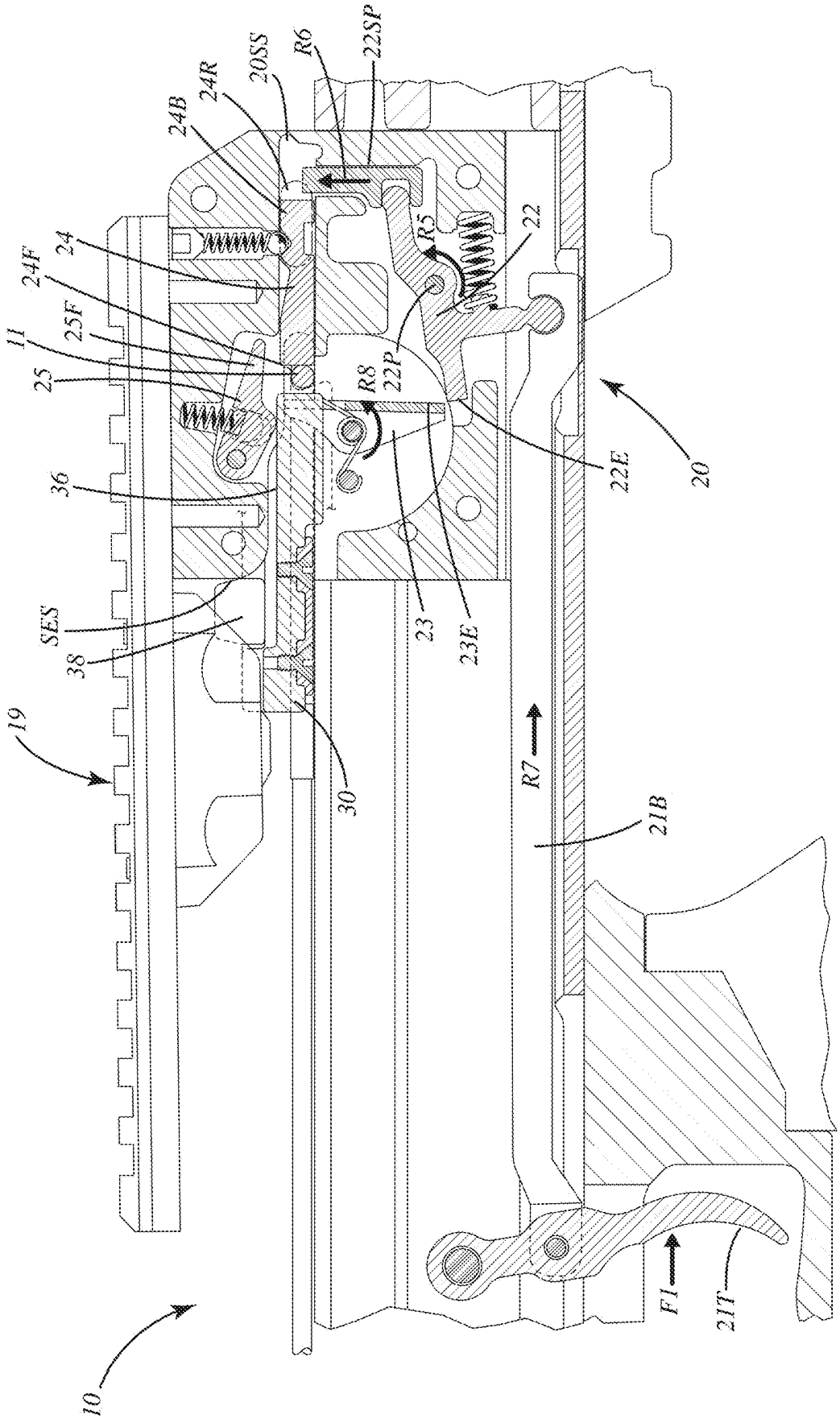
10
19
SES
38
36
11
25
25F
24F
24
24B
24R
20SS
R6
22SP
R5
22
22P
R8
23
23E
22E
20
30
R7
21B
F1
21T

Fig. 10

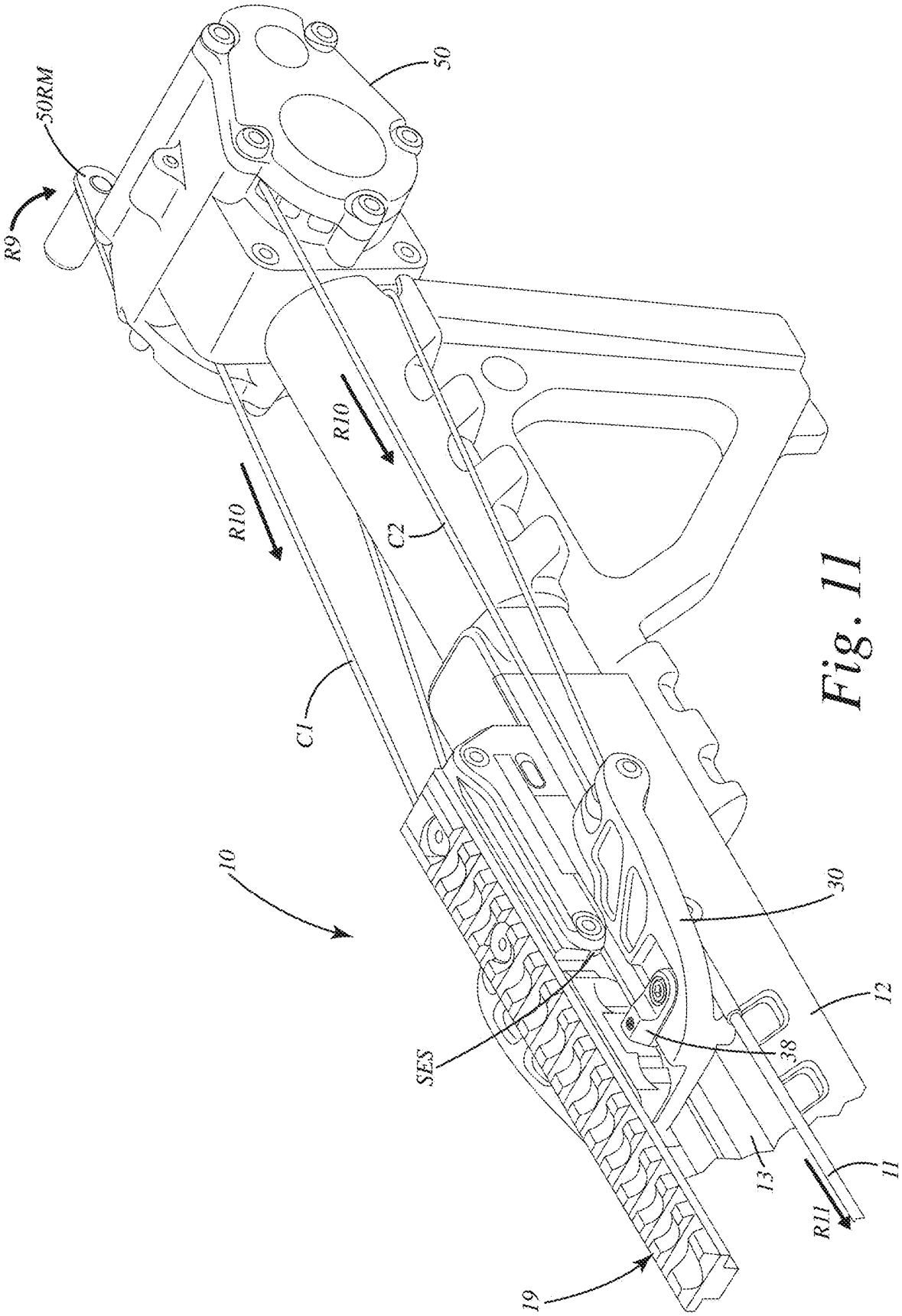


Fig. 11

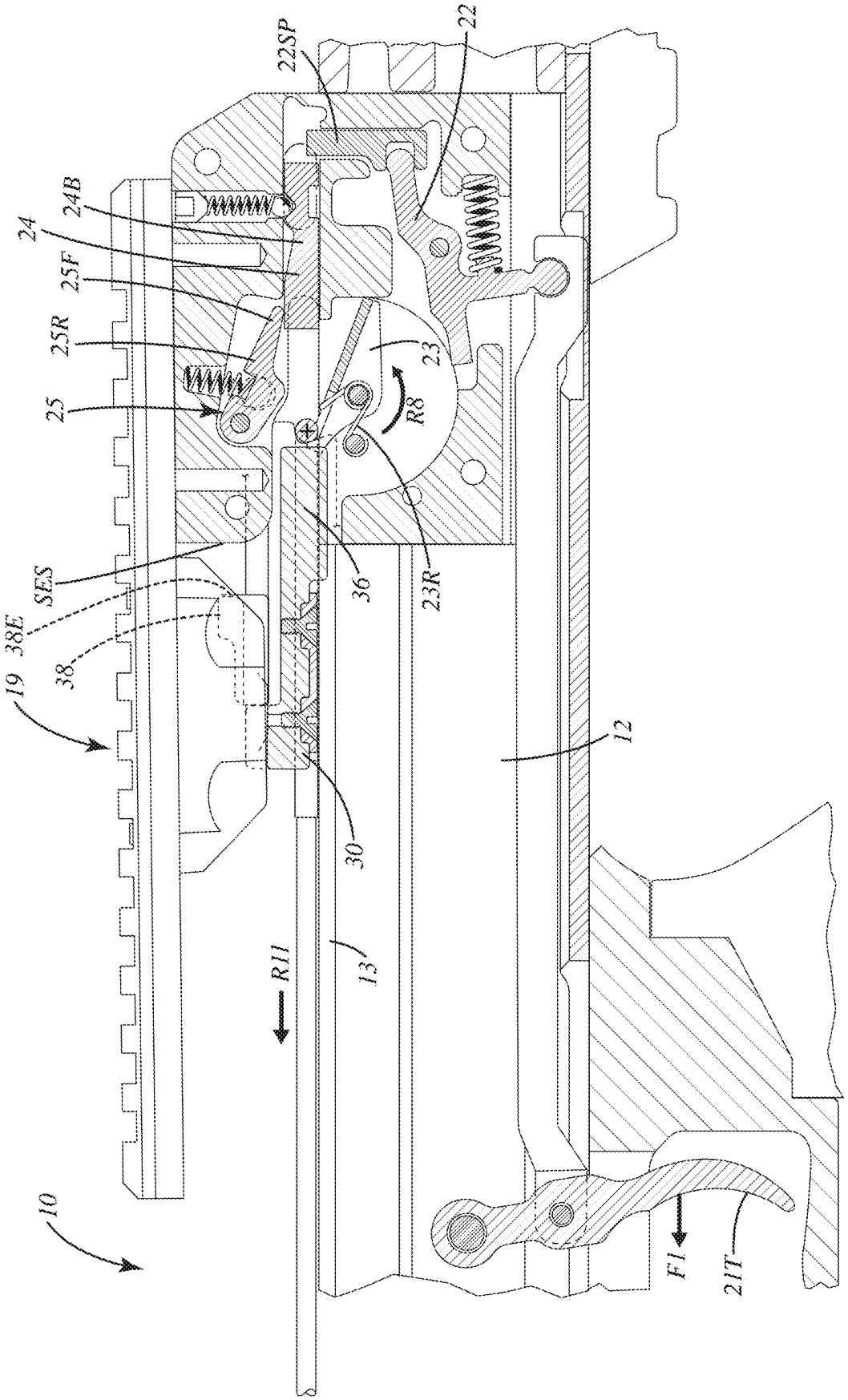
22SP
22
24B
24
25F
25R
25
23
R8
SES
38E
38
19
36
23R
12
30
R11
13
10
F1
21T

Fig. 12

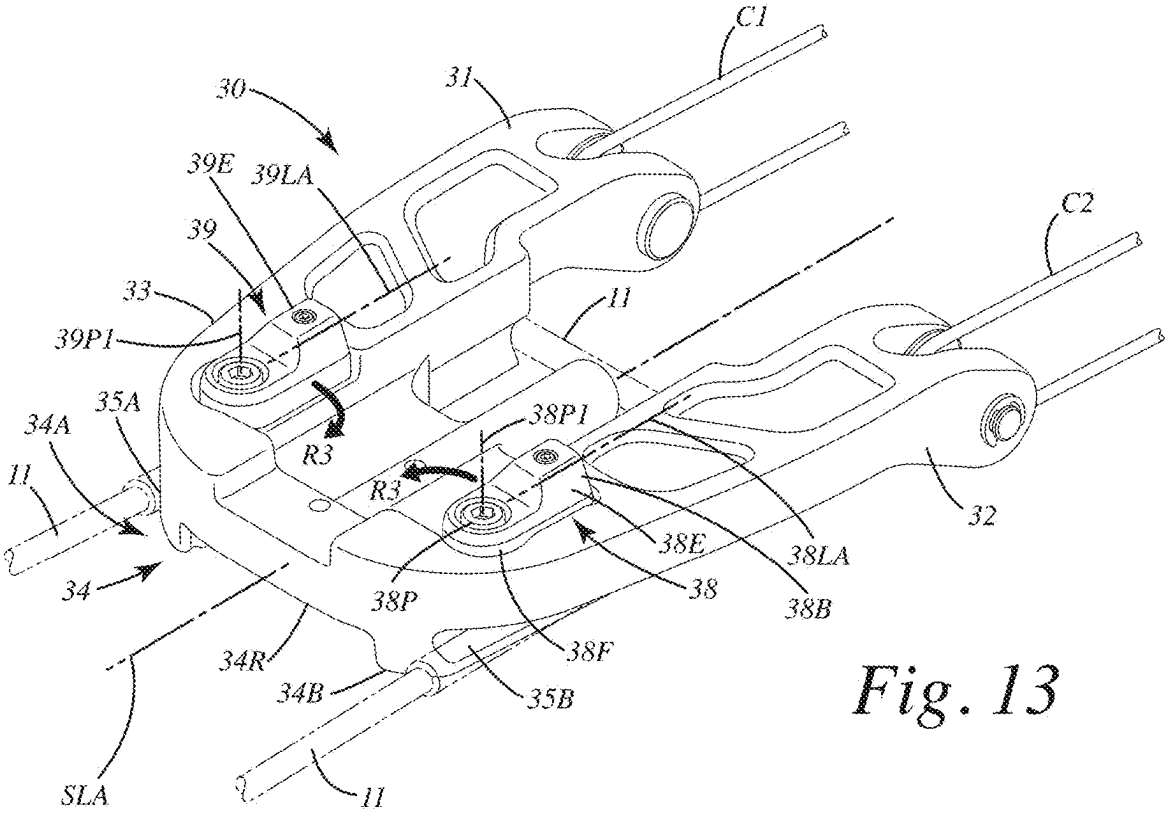
C1
30
31
39E
39LA
39
C2
33
11
39P1
35A
38P1
34A
R3
11
R3
32
38E
38LA
34
38P
38
38B
34R
38F
34B
35B
SLA
11

Fig. 13

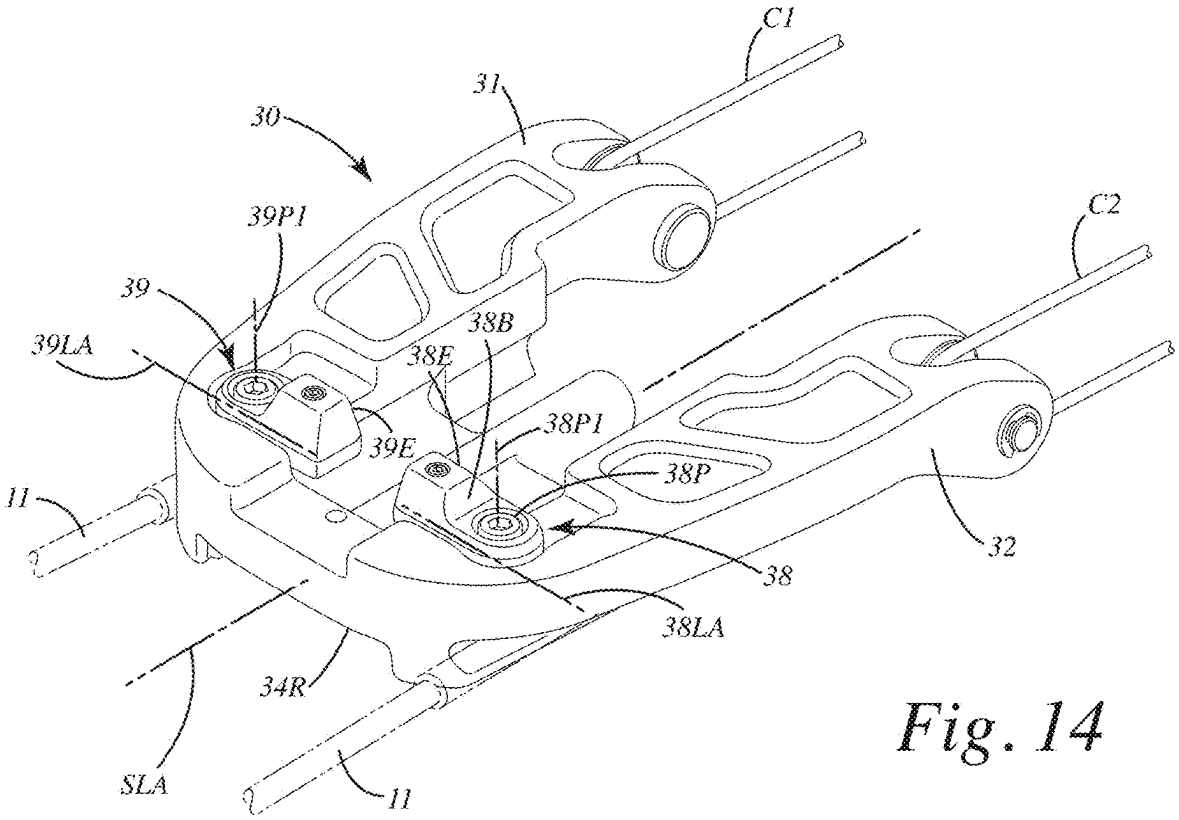
C1
31
30
39P1
C2
39
38B
39LA
38E
38P1
39E
38P
11
32
38
38LA
34R
SLA
11

Fig. 14

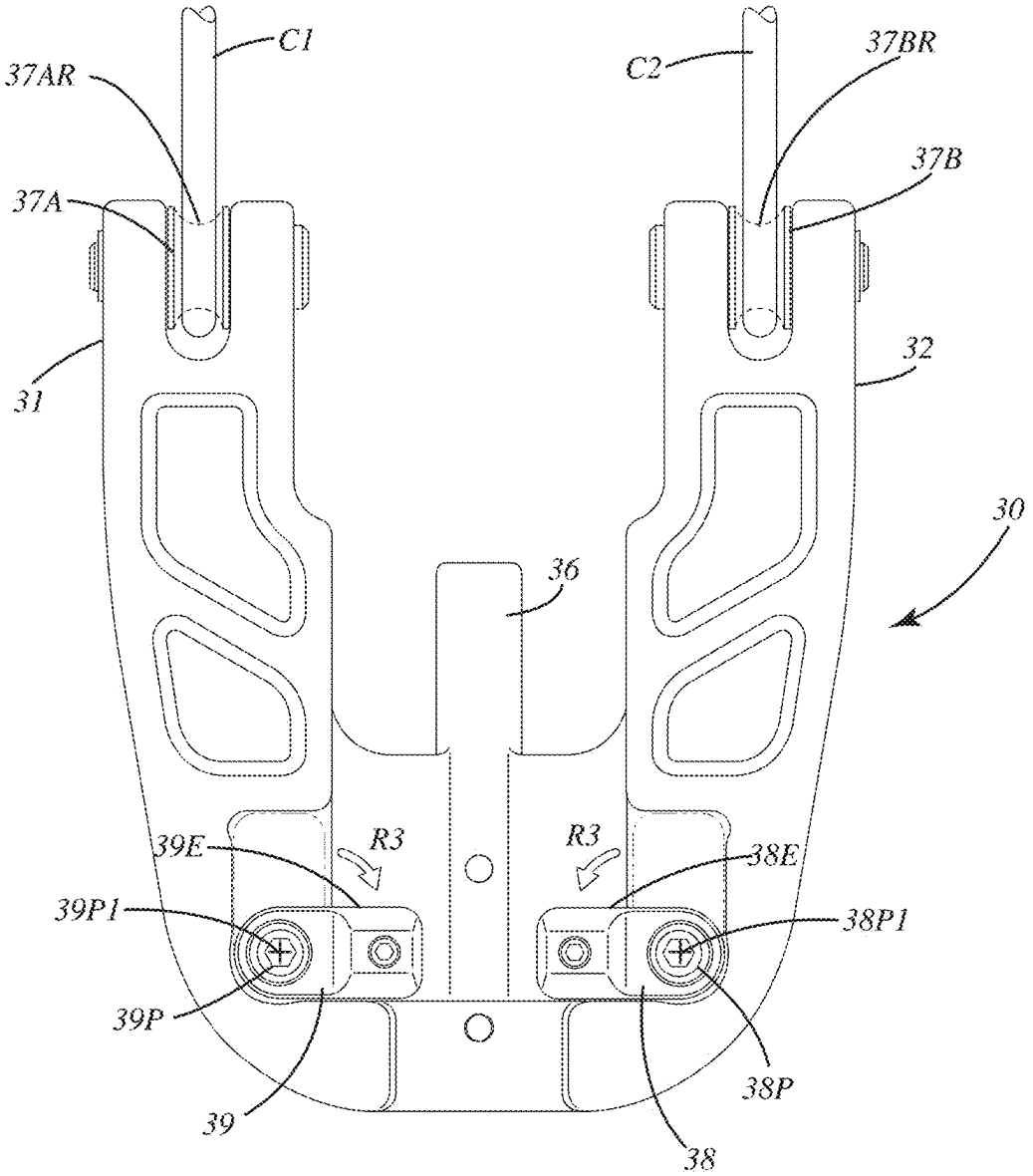
C1
C2
37AR
37BR
37A
37B
31
32
30
36
39E
R3
R3
38E
39P1
38P1
39P
38P
39
38

*Fig. 15*

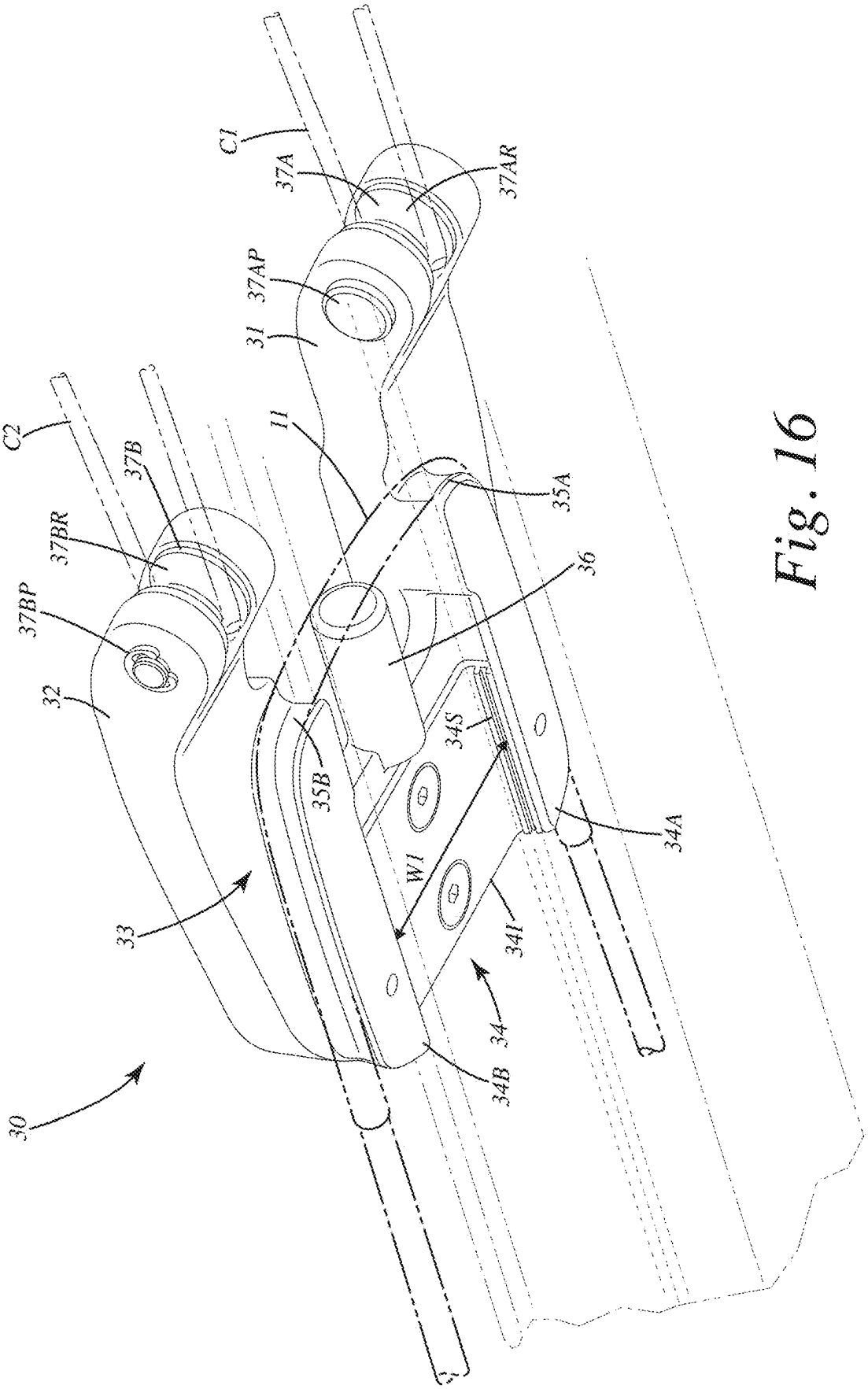
C1
37A
37AR
37AP
31
C2
37B
11
35A
37BR
36
37BP
32
34S
35B
34A
W1
33
34I
34
34B
30

Fig. 16

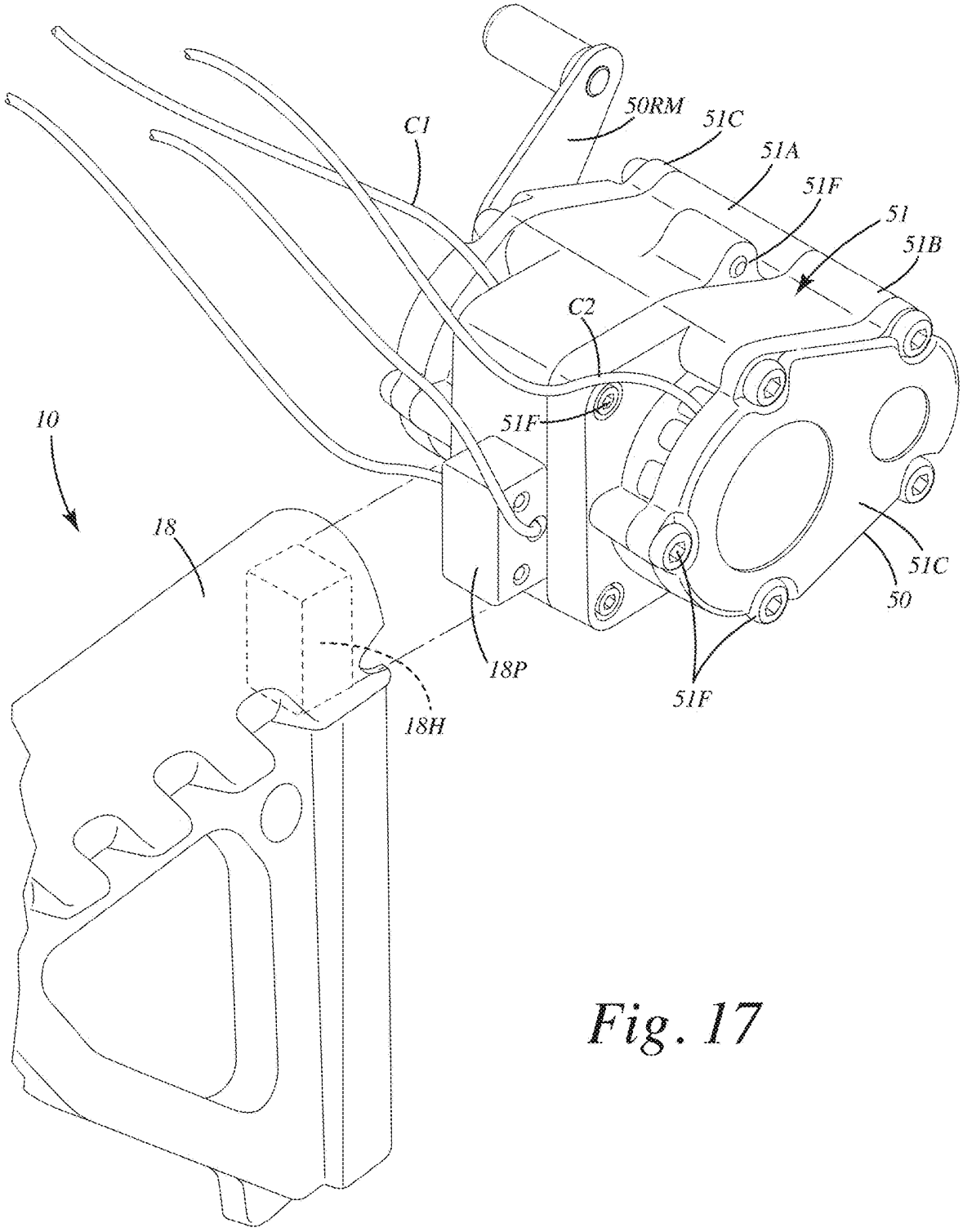


Fig. 17

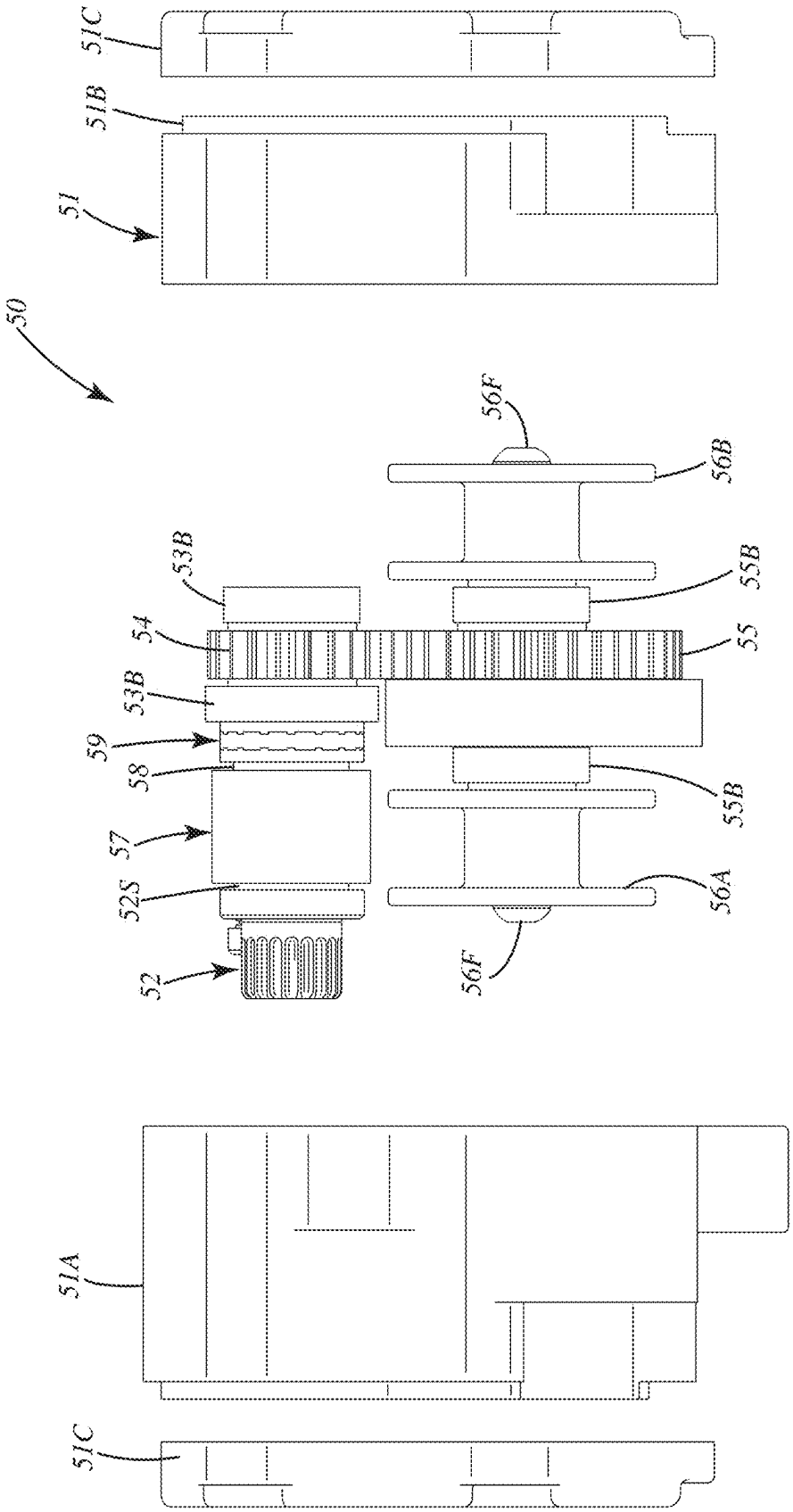
50
51C
51B
51
51A
51C
52
52S
57
58
59
53B
54
53B
56F
56B
55B
55
55B
56A
56F

Fig. 18

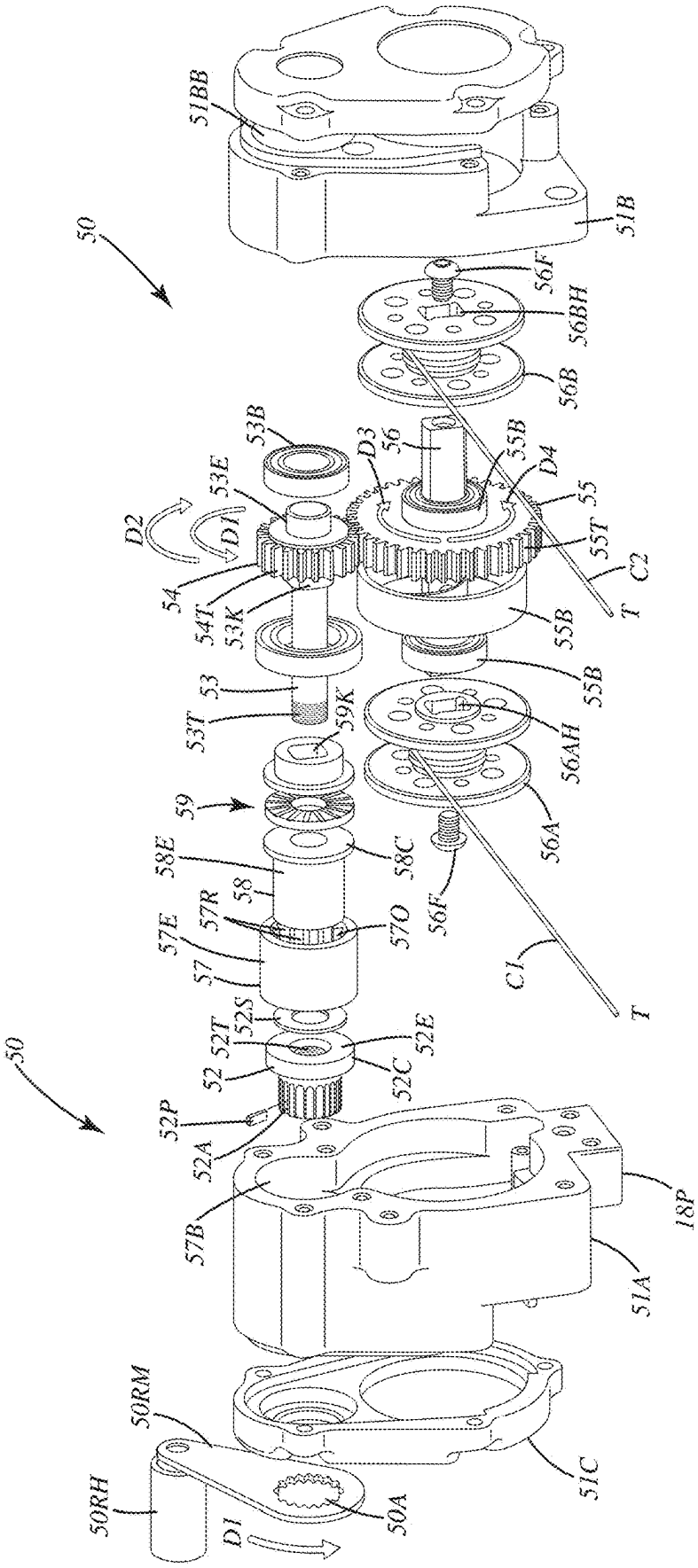
50
51BB
51B
56F
56BH
56B
53B
53E
D3
56
35B
D4
55
55T
C2
T
D2
D1
54
54T
53K
55B
55B
53
53T
59K
56AH
56A
59
58E
58C
58
57R
57O
56F
57E
57
C1
T
52S
52T
52
52E
52C
50
52P
52A
57B
18P
51A
50RM
50RH
D1
50A
51C

Fig. 19

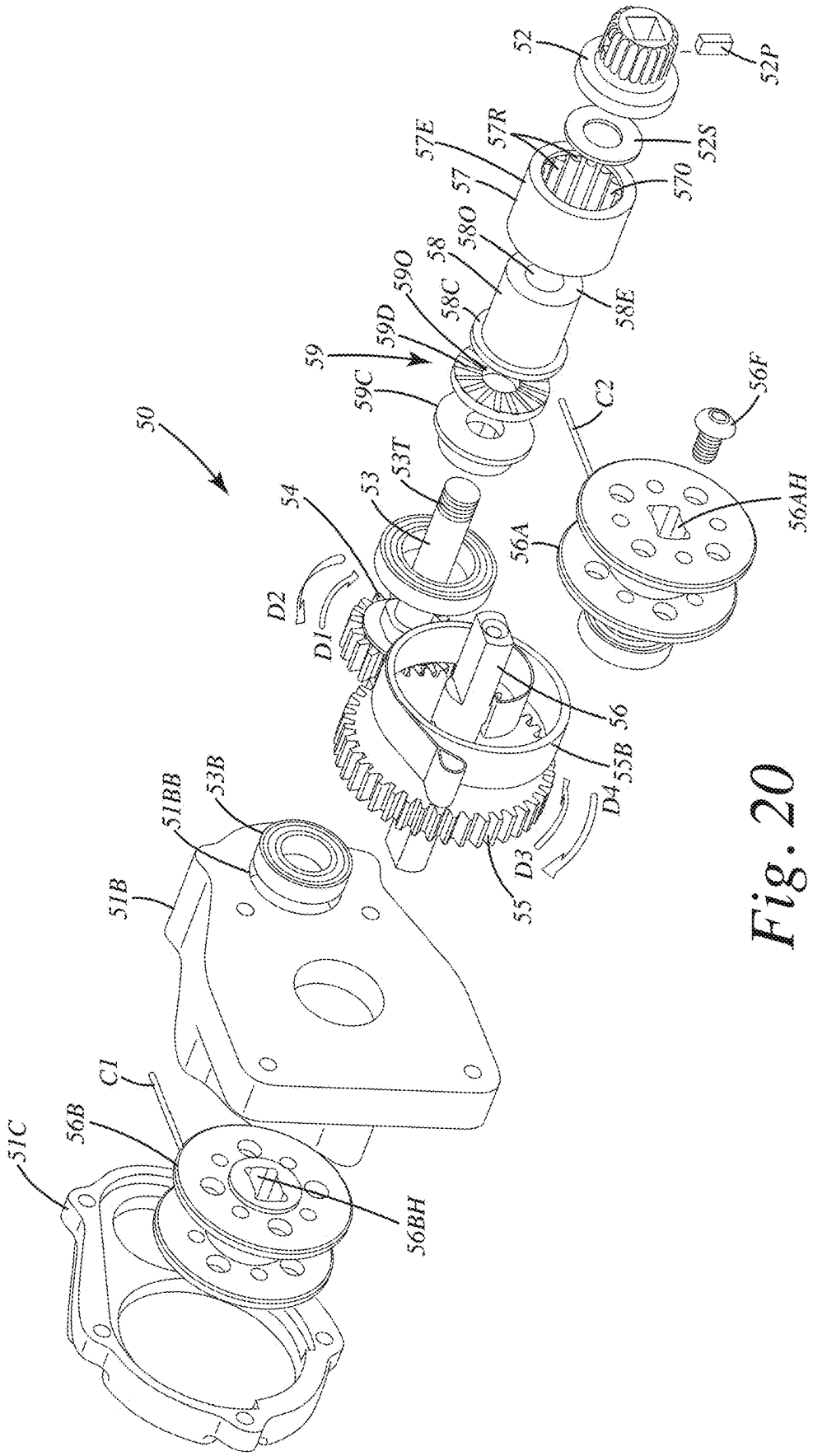
50
51C
56B
C1
51B
51BB
53B
56BH
55
D3
D4
55B
56
D1
D2
54
53
53T
59C
59
59D
59O
58C
58
58O
58E
57
57E
57R
57O
52S
52
52P
C2
56A
56AH
56F

Fig. 20

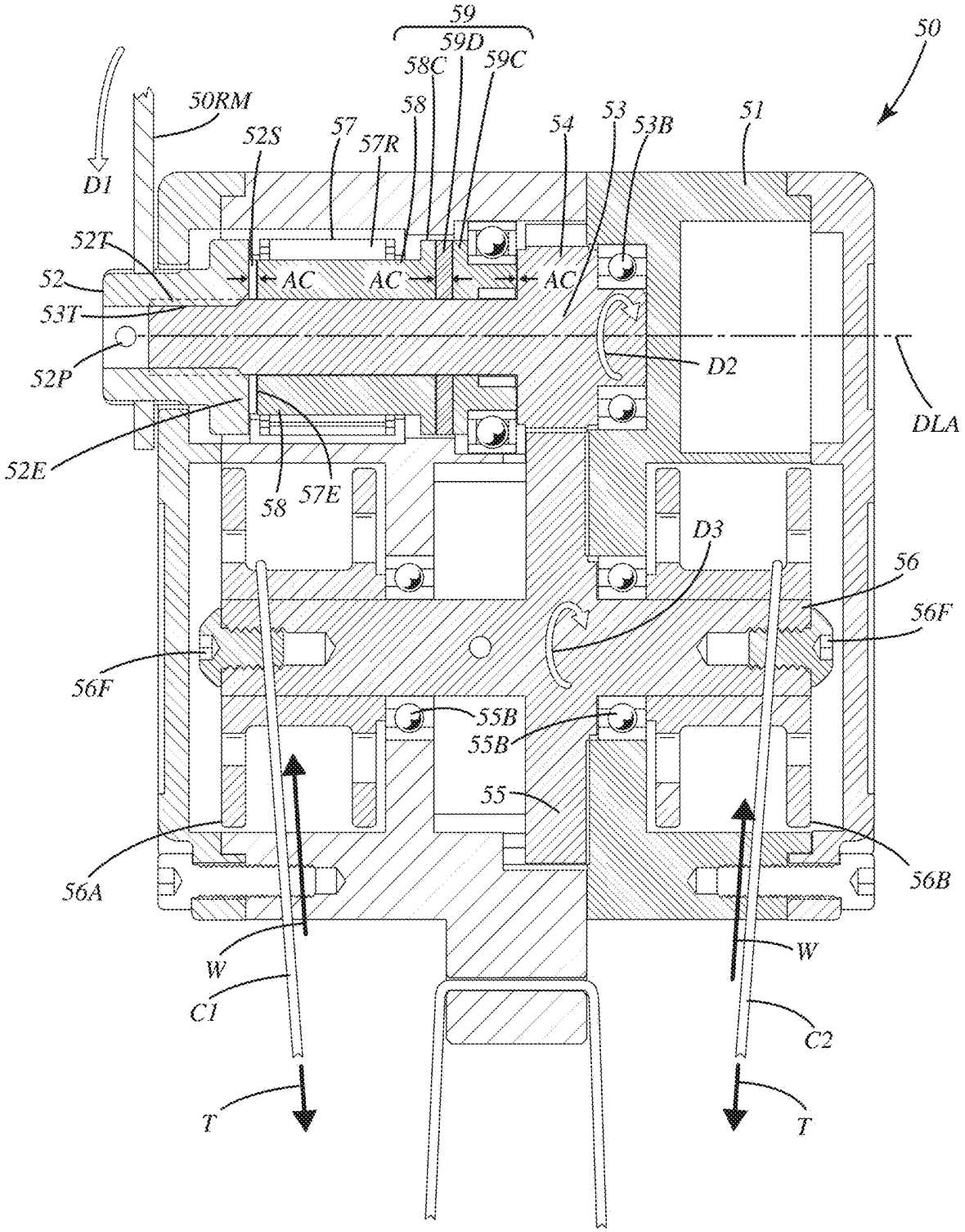
59
59D
58C
59C
50
50RM
58
57
57R
54
53
53B
51
52S
D1
52T
52
AC
AC
AC
53T
52P
D2
DLA
52E
58
57E
D3
56
56F
56F
55B
55B
55
56A
56B
W
W
C1
C2
T
T

*Fig. 21*

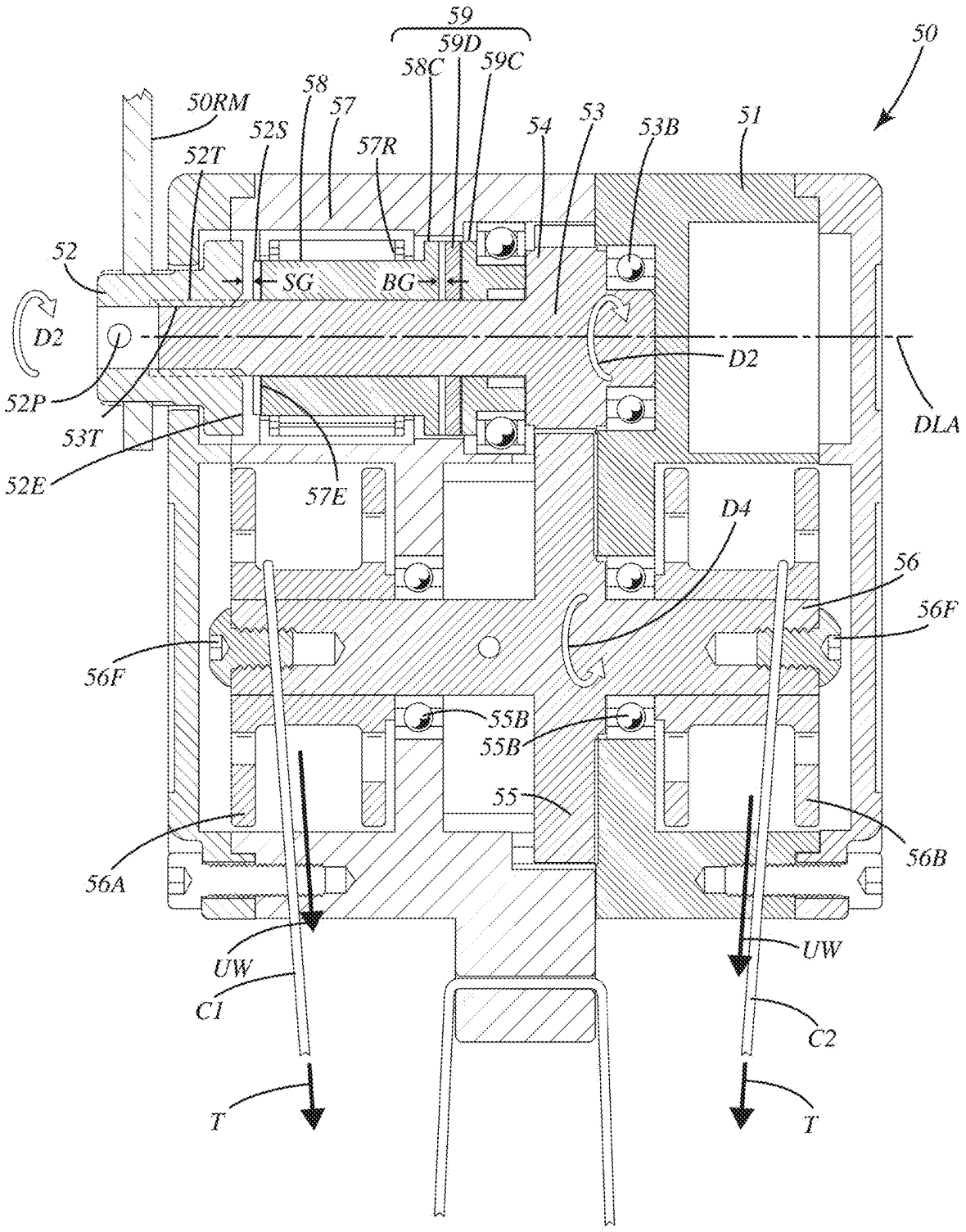
59
59D
58C
59C
50
50RM
58
57
52S
57R
54
53
53B
51
52T
52
SG
BG
D2
D2
52P
53T
52E
57E
DLA
D4
56
56F
56F
55B
55B
55
56A
56B
UW
UW
C1
C2
T
T

*Fig. 22*

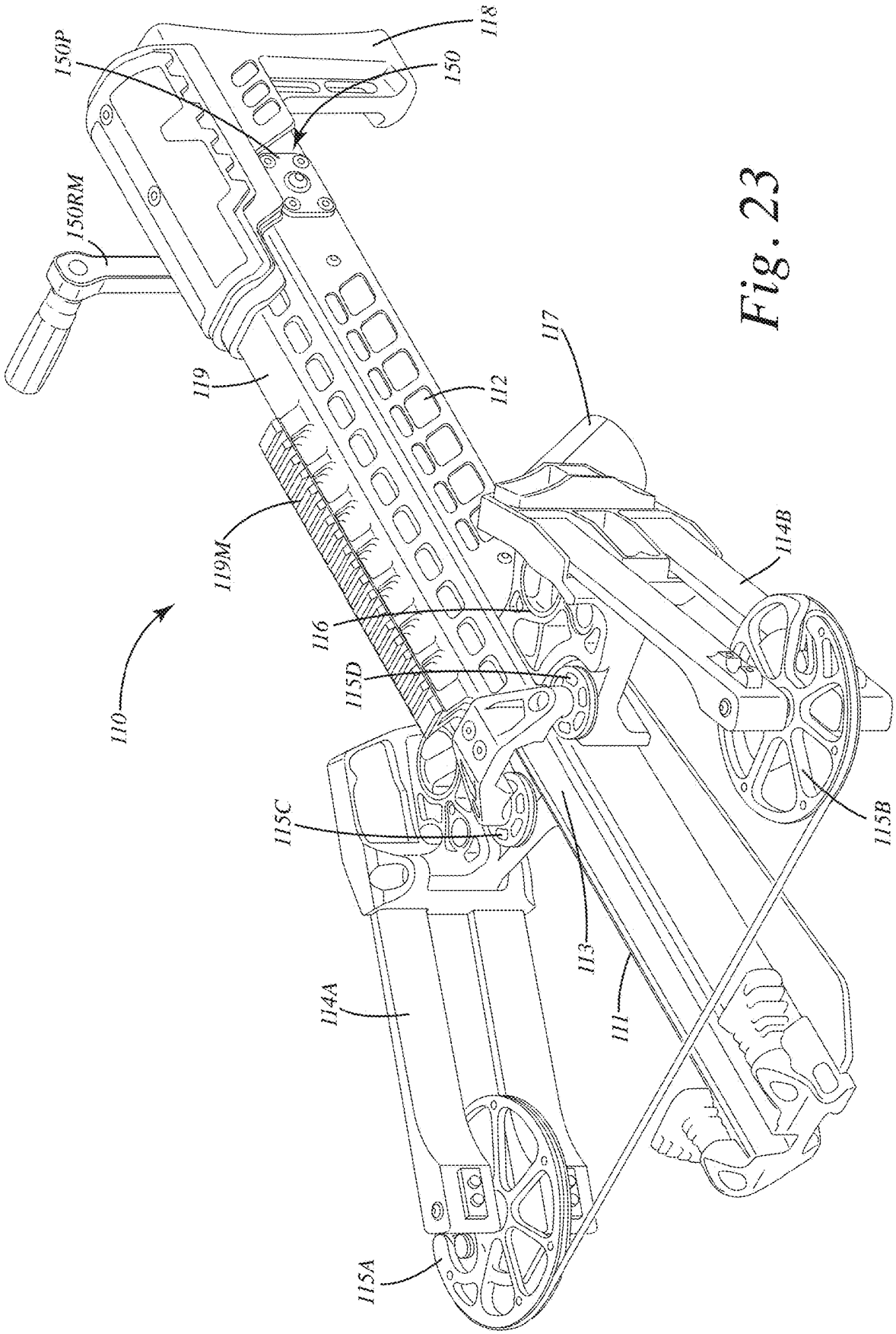
150P
150RM
118
150
119
112
117
119M
114B
116
115D
110
115C
115B
113
114A
111
115A

Fig. 23

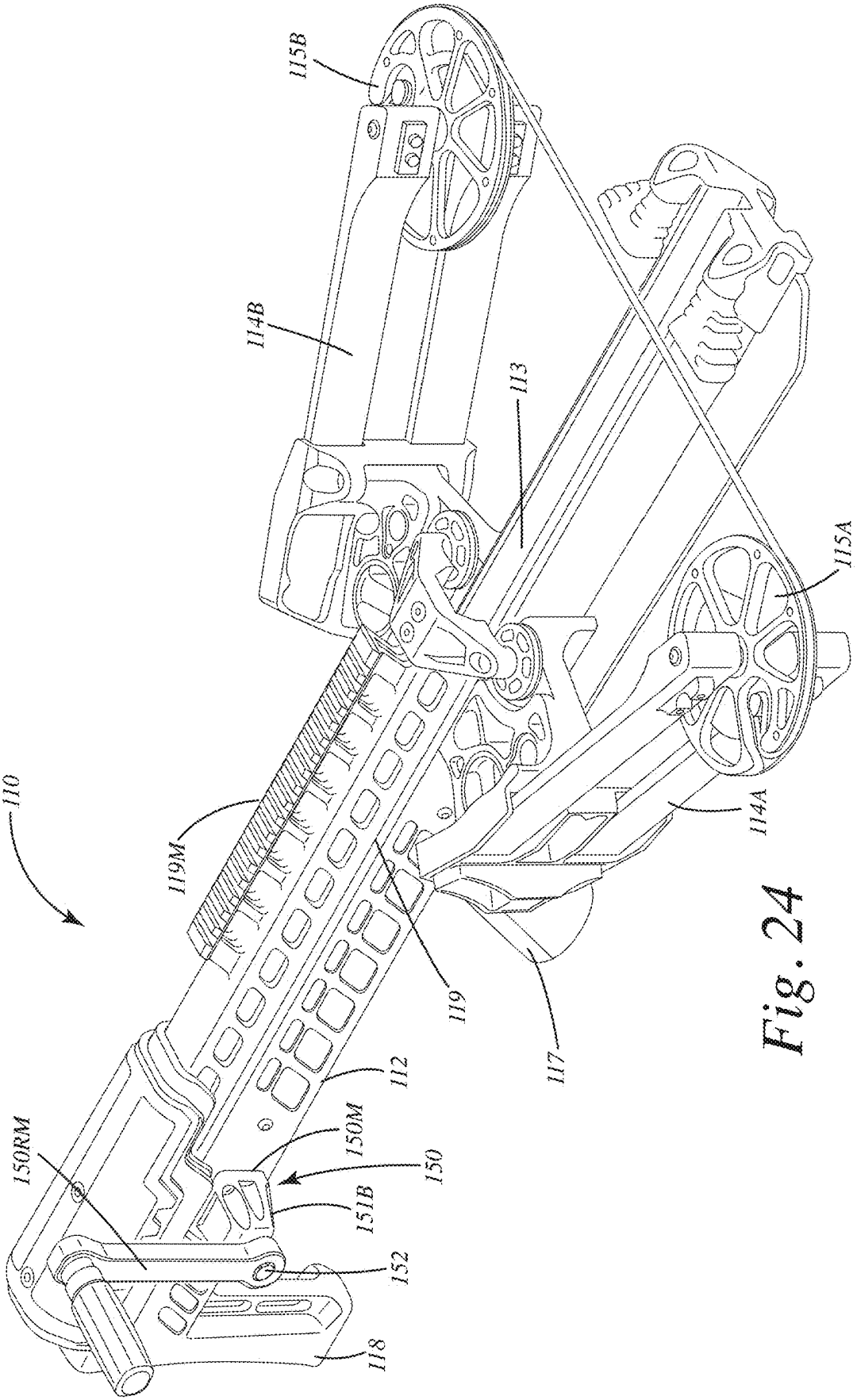
110
150RM
118
152
151B
150
150M
112
119M
119
117
114A
115A
113
114B
115B

Fig. 24

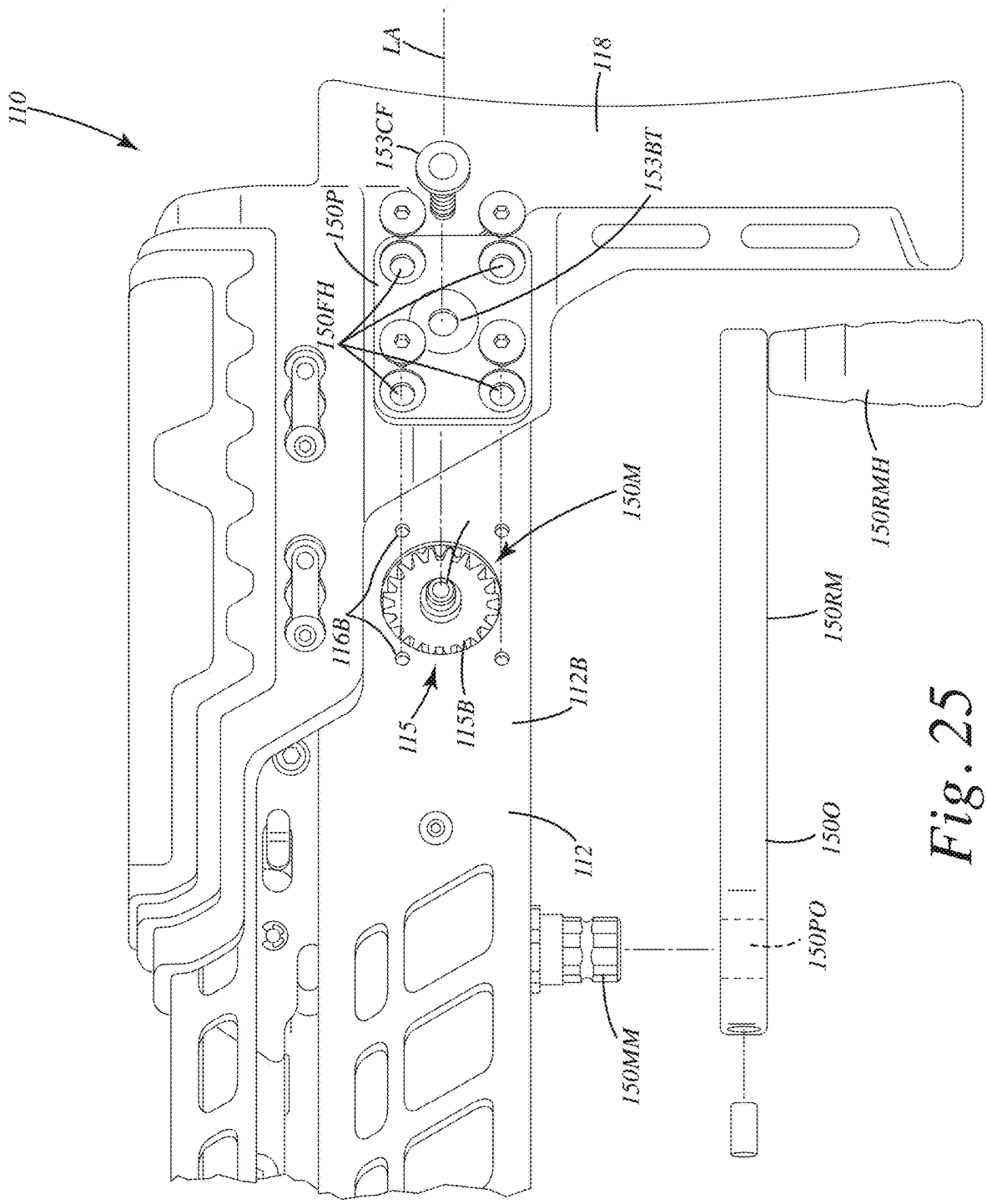
110
LA
118
153CF
153BT
150P
150FH
150M
116B
115
115B
112B
112
150RMH
150RM
150O
150PO
150MM

Fig. 25

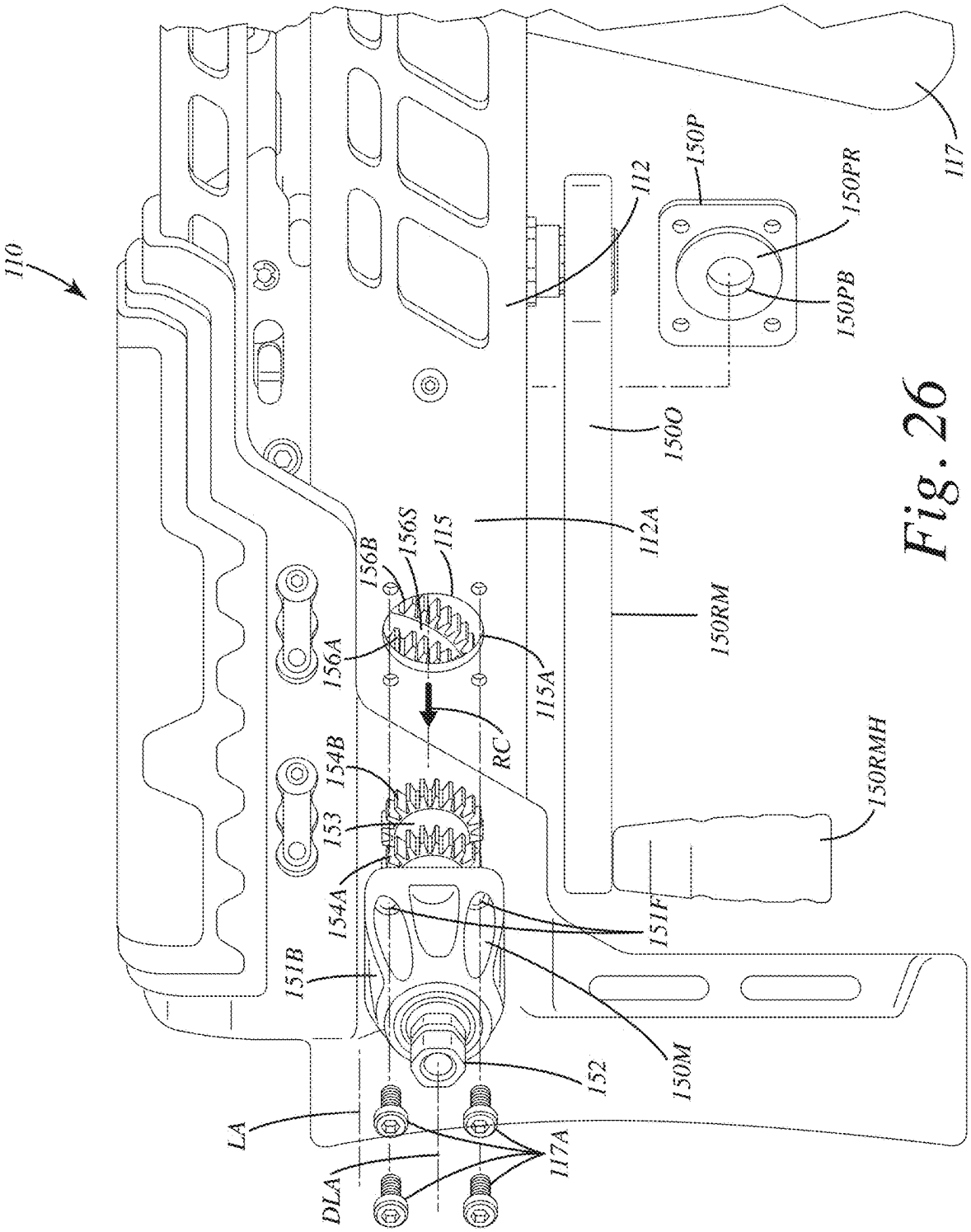
110
117
150P
150PR
150PB
112
150O
112A
150RM
150RMH
156B
156S
115
156A
115A
RC
154B
153
154A
151F
151B
152
150M
LA
DLA
117A

Fig. 26

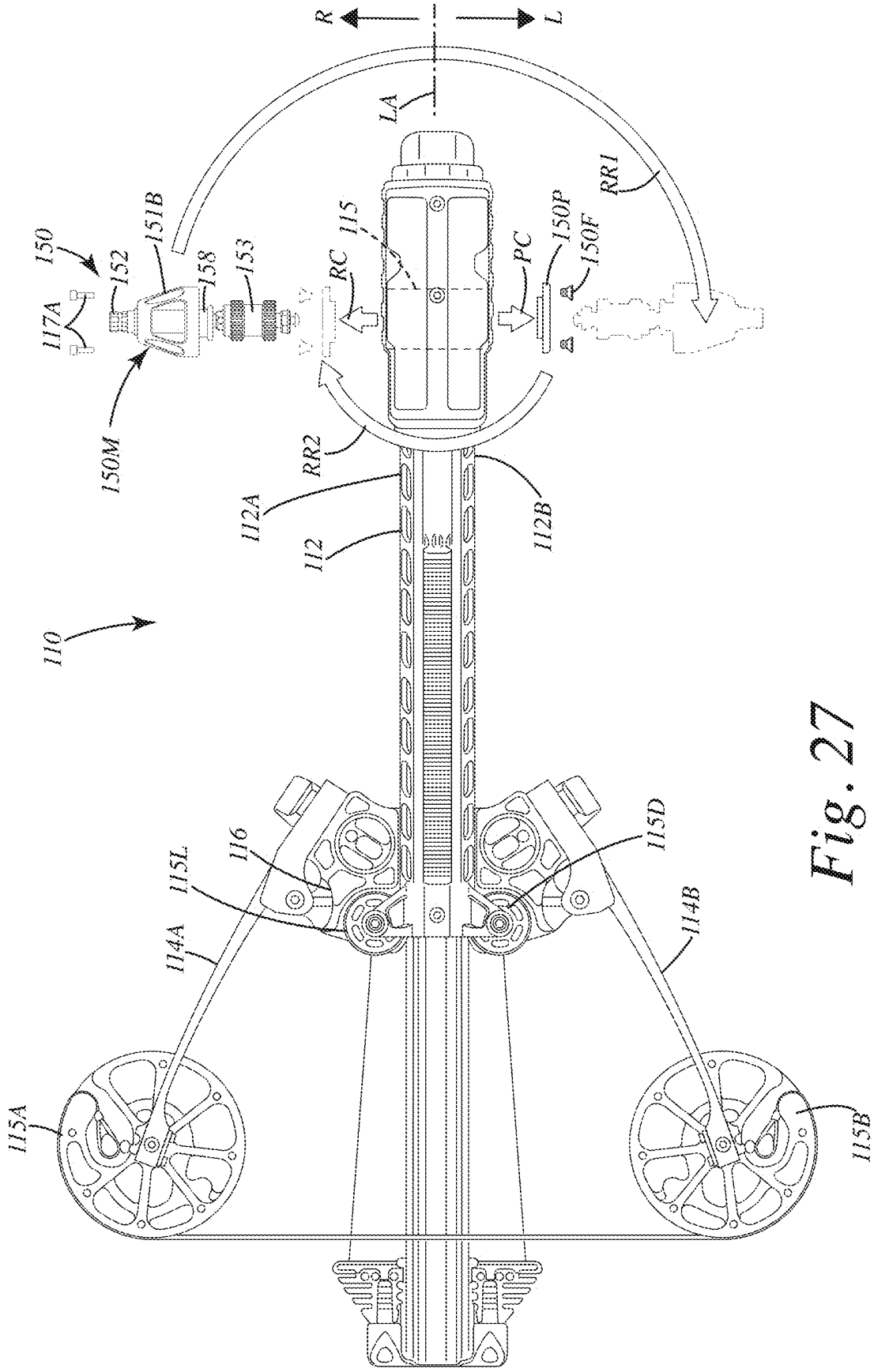
R
L
LA
RR1
150
151B
152
158
153
117A
150M
RC
115
PC
150P
150F
RR2
112A
112
112B
110
116
115L
114A
115D
114B
115A
115B

Fig. 27

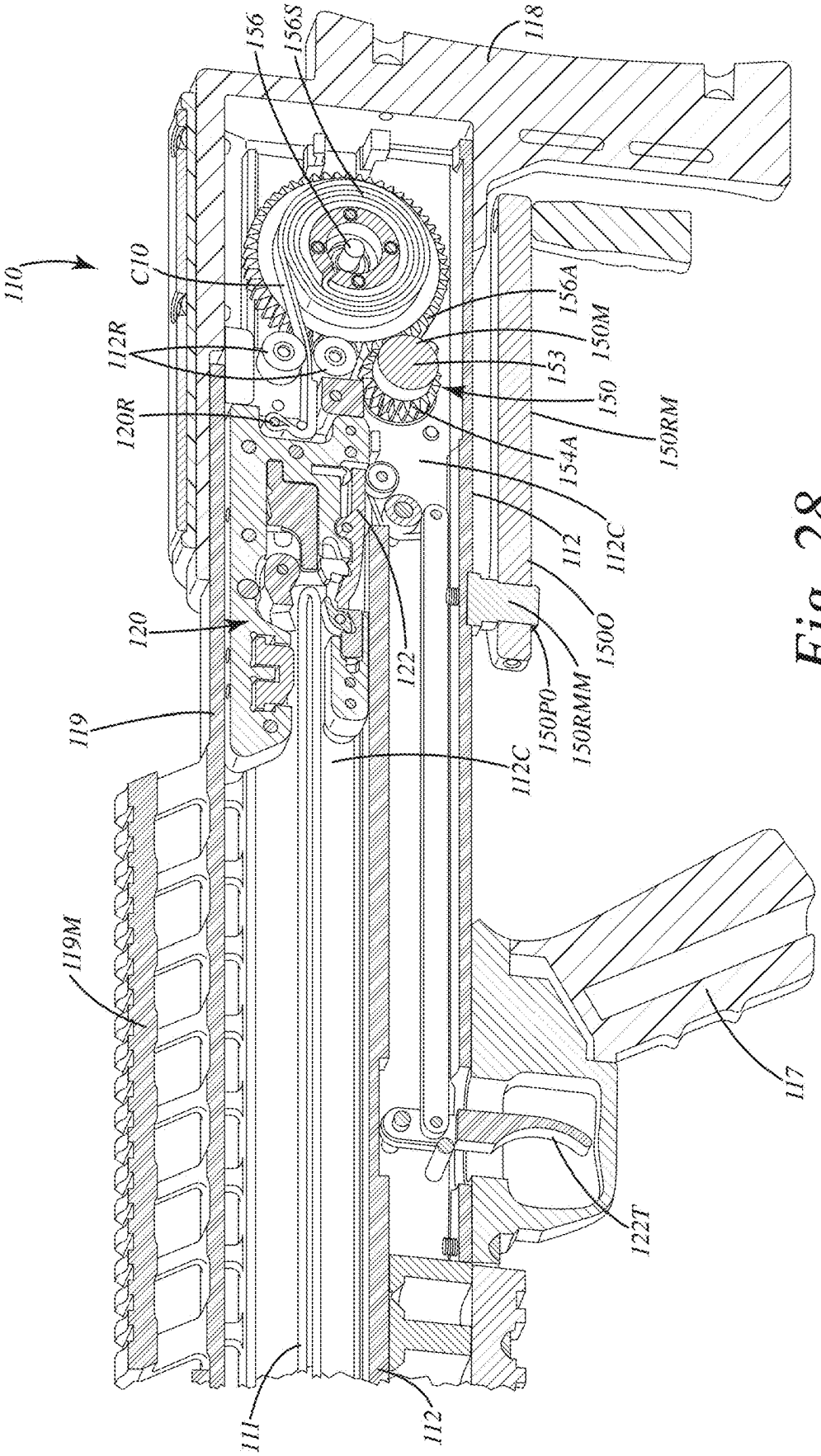
110
C10
112R
120R
120
119
119M
111
112
156
156S
118
156A
150M
153
150
150RM
154A
112
112C
150O
150RMM
150PO
122
112C
117
122T

Fig. 28

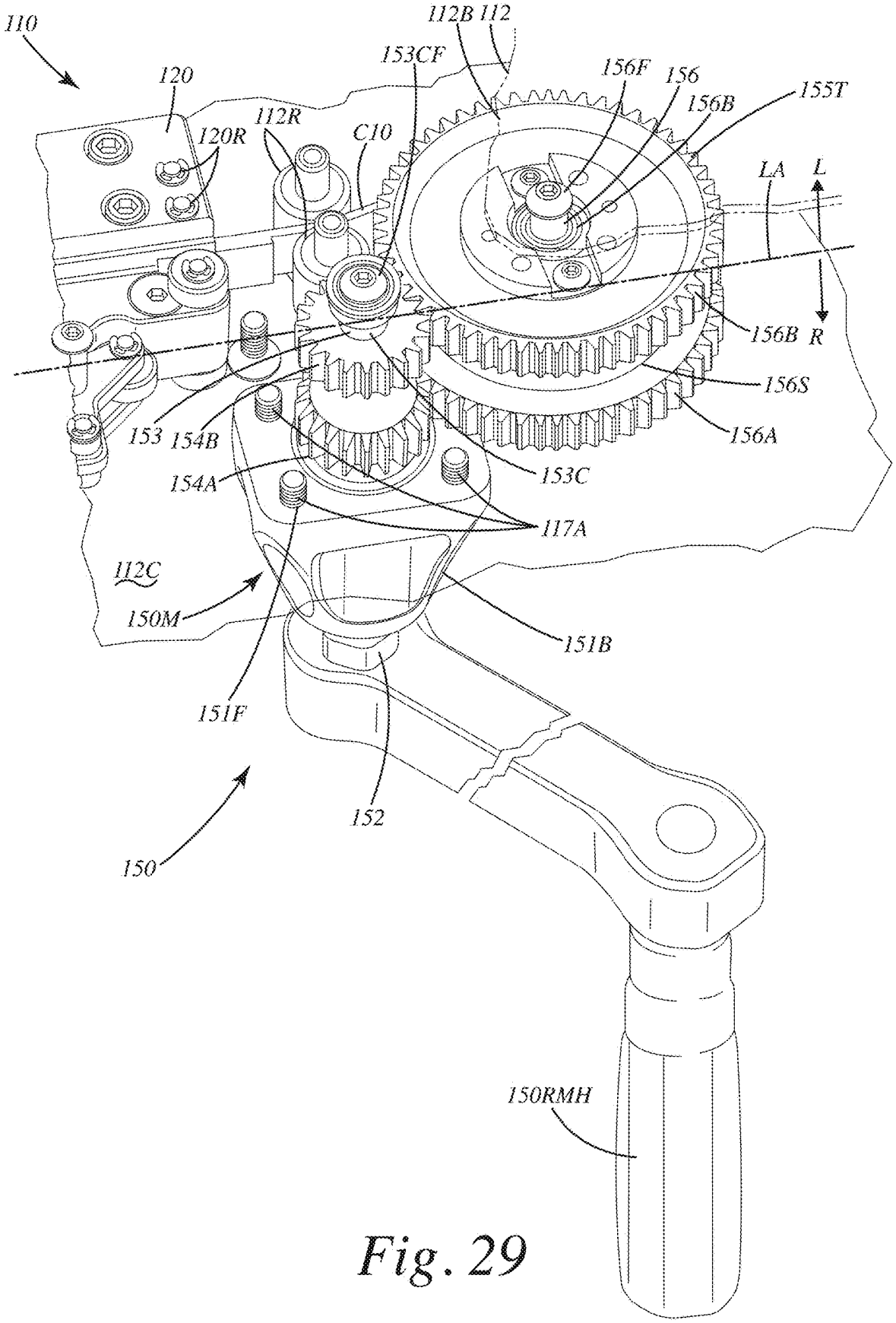
110
120
120R
112R
C10
153CF
112B
112
156F
156
156B
155T
LA
L
R
156B
156S
156A
153
154B
154A
153C
117A
112C
150M
151B
151F
152
150
150RMH

Fig. 29

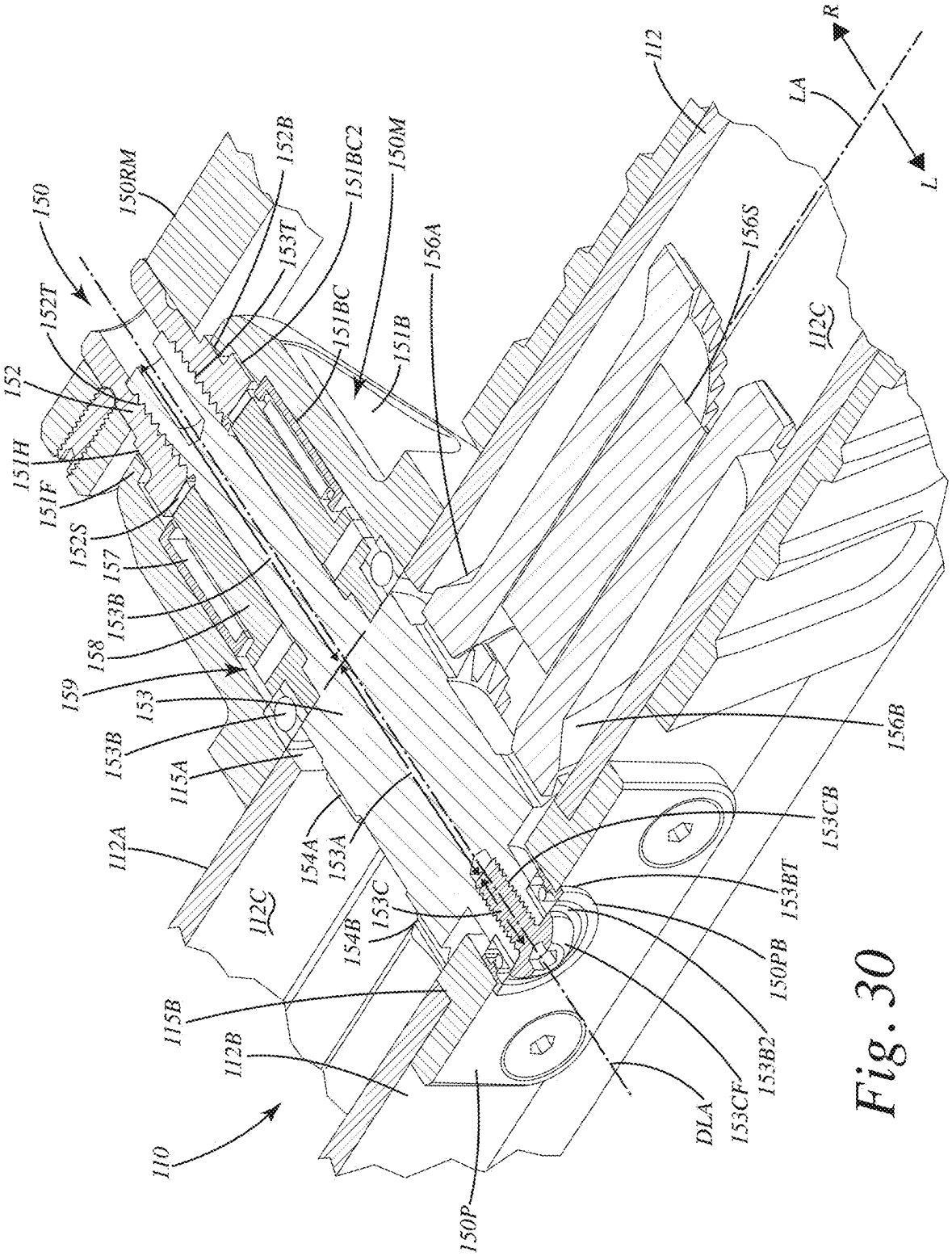
150
150RM
152B
151BC2
150M
152T
153T
151BC
151B
156A
152
151H
151F
152S
157
153B
158
159
153
153B
115A
112A
112C
154A
153A
154B
153C
115B
112B
110
150P
DLA
153CF
153B2
150PB
153BT
153CB
156B
112C
156S
112
LA
R
L

Fig. 30

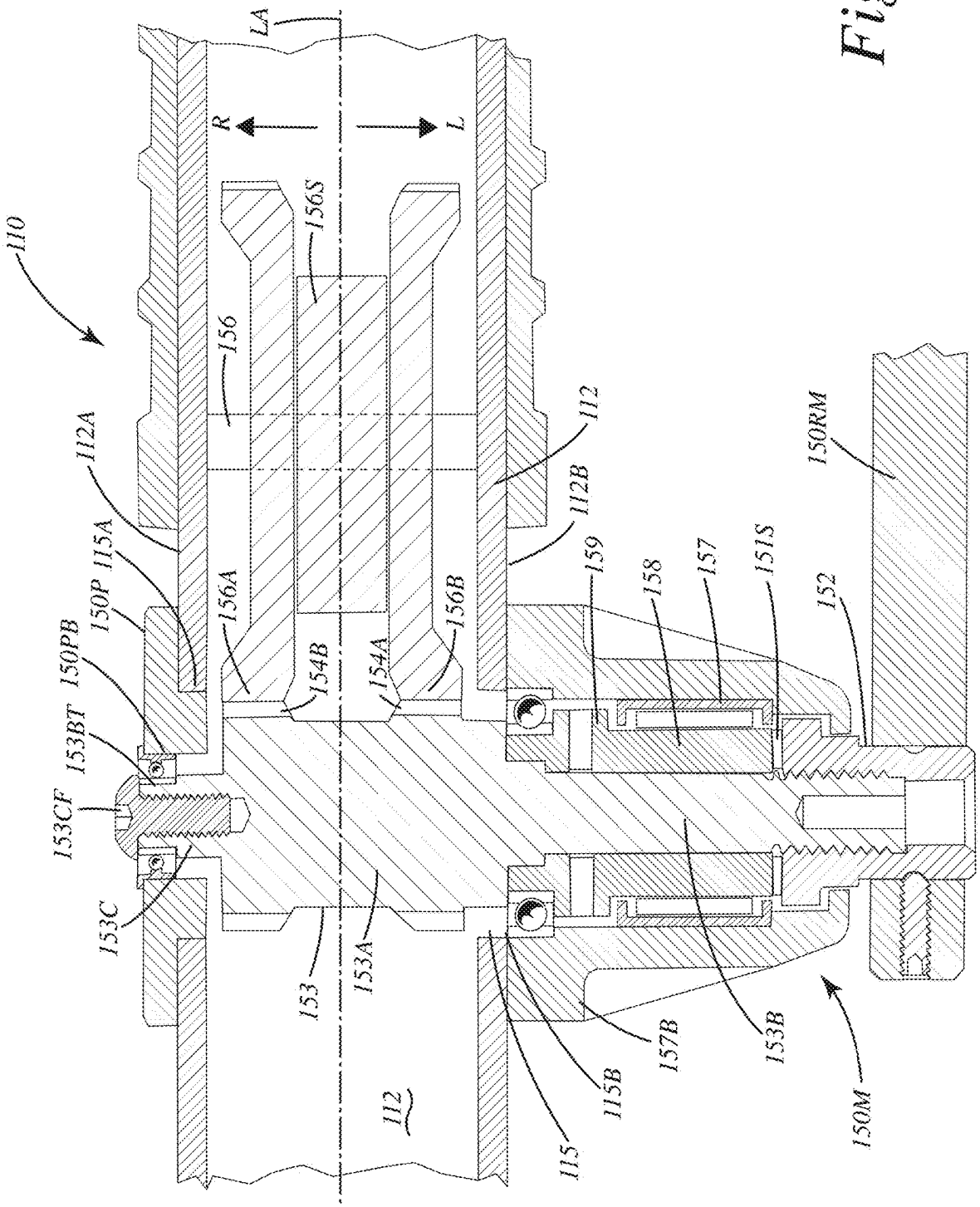
110
LA
R
L
156S
156
112A
115A
150P
150PB
153BT
153CF
153C
156A
154B
154A
156B
112
112B
159
158
157
151S
152
150RM
153
153A
112
115
115B
157B
153B
150M

Fig. 31

# CROSSBOW CRANK AND RELATED METHOD OF USE

## BACKGROUND OF THE INVENTION

**[0001]** The present invention relates to archery crossbows, and more particularly to crossbow cocking and/or de-cocking systems.

**[0002]** Crossbows have been used throughout the centuries for hunting, fishing, and target shooting. Crossbows typically include a stock joined with a rail, upon which a bolt or an arrow is placed. A pair of bow limbs are mounted at an end of the rail and a bowstring is strung between the limbs over the rail for engagement with the bolt or arrow. Sometimes, the crossbow includes cams on the bow limbs that receive the bowstring and one or more power cables to increase stored energy. The crossbow also can include a trigger mechanism adjacent the rail operable to hold the bowstring and to release the bowstring to fire the crossbow, thereby shooting an arrow or bolt from the crossbow.

**[0003]** The bowstring of a crossbow usually is movable from an undrawn or un-cocked position to a drawn or cocked position. In the cocked position, the trigger mechanism secures the bowstring in a fixed, stationary position relative to the rail. When the bowstring is drawn from the undrawn position to the drawn position, this is referred to as cocking the crossbow. Sometimes, however, a user will want to convert the crossbow bowstring from the drawn position to the undrawn position without shooting a bolt or arrow. This cannot be done safely by simply removing the bolt or arrow and actuating the trigger mechanism to release the bowstring because the stored energy in the crossbow would damage or destroy the components of the crossbow, and potentially can injure the user. Accordingly, the user may desire to de-cock the crossbow by letting down the bowstring to the undrawn position. There are multiple conventional methods and systems for de-cocking a crossbow, however, many of them incorporate complicated, additional mechanical components in the trigger mechanism and/or require a complex sequence of steps to de-cock the crossbow.

**[0004]** Further, as mentioned above, the bowstring of a crossbow usually is movable from an undrawn or un-cocked position to a drawn or cocked position. Movement of the bowstring can be accomplished via a cord or rope being attached to the sled and pulled manually by a user. Alternatively, movement can be accomplished via a winch attached to the crossbow, typically rearward of the trigger assembly. Recently, due to higher draw weights on crossbows to improve speed, more and more crossbows are offered with a winch. Although these winches are helpful to draw a crossbow, they can be complicated to operate and control when a user wants to use such winch to de-cock a crossbow. This can discourage users from utilizing such winches, in which case the user may simply shoot the crossbow to return it to the undrawn state. Further, increased complexity in operation of the winch to de-cock a crossbow can lead to operator error, such as inadvertent release of the bowstring in a dry fire event, or a lock-up of the winch in some cases.

**[0005]** Accordingly, there remains room for improvement in the field of crossbows, and in particular systems and components to facilitate safe and reliable cocking and/or de-cocking of crossbows.

## SUMMARY OF THE INVENTION

**[0006]** A crossbow can include a de-cocking system to allow a bowstring to be transitioned from a drawn mode to an undrawn mode and thereby de-cock the crossbow.

**[0007]** A crossbow can include a crossbow crank to cock and/or de-cock the crossbow.

**[0008]** In one embodiment, the de-cocking system can include a sled that engages the bowstring to draw the bowstring to a drawn mode and/or let down the bowstring to the undrawn mode during a de-cocking operation.

**[0009]** In another embodiment, the sled can include a stop that prevents the sled or bowstring from engaging a safety and/or interfering with transition of the safety from a safety on mode to a safety off mode.

**[0010]** In still another embodiment, the safety can be manually actuated from the safety on mode to the safety off mode while the sled is used to de-cock the bowstring. With the safety in the off mode, upon actuation of a trigger assembly, the sled can assist transition of the bowstring to the undrawn mode, for example, by letting down the bowstring from the drawn mode to the undrawn mode during a de-cocking operation.

**[0011]** In yet another embodiment, the stop can be modifiable, such that the sled can be used in both the de-cocking operation, as well as a drawing operation in which the sled transitions the bowstring from the undrawn mode to the drawn mode. Where modifiable, the stop of the sled can be operable in both a neutral mode in which the stop does not interfere with rearward movement of the sled so that the bowstring can move to the drawn mode, and in a de-cocking mode in which the stop interferes with movement of the sled along the frame so that the sled is prevented from engaging the bowstring against the safety, which faces a catch of the trigger assembly, while the safety remains in the safety on mode.

**[0012]** In even another embodiment, the stop in the de-cocking mode can allow a user to manually move the safety to the safety off mode, and subsequently activate the trigger assembly so that the bowstring can be let down from the drawn mode to the undrawn mode with the sled engaging the bowstring as the letting down occurs.

**[0013]** In a further embodiment, the trigger assembly can be joined with the frame and can include a catch that is operable in a holding mode in which the catch retains the bow string in the holding mode and a drop mode that releases the bowstring to the undrawn mode. The trigger assembly can include a sear operable in a cocked mode that retains the catch in the holding mode and a fire mode that allows the catch to move to the drop mode to release the bowstring, for example, when the crossbow shoots a bolt or when the crossbow undergoes a de-cocking operation.

**[0014]** In still a further embodiment, the trigger assembly can include a trigger coupled to the sear. The sled can remain distal from, disengaged from, and/or out of contact with the safety in the de-cocking mode. The safety can be manually moveable in the de-cocking mode to transition the safety from the safety on mode to the safety off mode so that the sear is operable in the fire mode when the trigger is moved, whereby the catch can move to the drop mode to release the bowstring.

**[0015]** In yet a further embodiment, the crossbow can include an anti-dry fire element moveable between a lockout position that prevents the safety from moving from the safety on mode to the safety off mode, and an open position

that permits the safety to move to the safety off mode. Where the anti-dry fire element is included in the crossbow, the sled can include a protrusion that moves the anti-dry fire element to the open position when the sled is adjacent the trigger assembly, such that the safety can subsequently be converted to the safety off mode.

**[0016]** In even a further embodiment, the sled can include a guide that moves along the frame when the sled engages the bowstring. The sled can include a bowstring engager configured to receive the bowstring during movement of the bowstring to the drawn mode with the sled.

**[0017]** In another embodiment, the stop can be in the form of a first stop including a first flange and a first pivot axis about which the first flange is selectively pivotable. The first flange can include a first engagement surface. A stop engagement surface or stop limiter can be disposed adjacent the trigger assembly. The first engagement surface can contact the stop engagement surface or limiter in the de-cocking mode in which the first stop arrests movement of the sled.

**[0018]** In still another embodiment, the sled can include the first stop and a second stop. The second stop can include a second flange and a second pivot axis about which the second flange is selectively pivotable. The second flange can include a second engagement surface. The second engagement surface can contact the stop engagement surface distal from the first stop in the de-cocking mode, thereby assisting in arresting movement of the sled during a de-cocking operation.

**[0019]** In yet another embodiment, the frame can include a rail. The first stop and first flange can be mounted on a first side of the rail. The second stop and second flange can be mounted on the second side of the rail, opposite the first flange. The first flange and the second flange can be configured to simultaneously engage the limiter or a stop engagement surface thereof in the de-cocking mode.

**[0020]** In even another embodiment, a method is provided. The method can include pulling on a bowstring that is in a drawn mode with a sled including a stop, so the stop engages a limiter on the crossbow and ceases movement of the sled and stop relative to a frame of the crossbow in a de-cocking mode, leaving a first distance between the bowstring and a safety, without the sled and stop engaging the safety; moving the safety toward the bowstring to reduce the first distance to a second distance between the bowstring and the safety, the second distance being less than the first distance; pulling a trigger so that a catch disengages the bowstring; and transitioning the bowstring to an undrawn mode while the sled engages the bowstring to de-cock the crossbow.

**[0021]** In a further embodiment, the method can include manually engaging the safety to slide the safety in a slot so that a forward face of the safety moves toward the bowstring without engaging the bowstring during the moving step. This movement can occur without any part of the sled or its components engaging the safety.

**[0022]** In still a further embodiment, the method can include transitioning the stop from the de-cocking mode to a neutral mode by rotating the stop toward another stop on the sled after the crossbow is de-cocked and the bowstring is in the undrawn mode; and drawing the bowstring from the undrawn mode to the drawn mode while the stop is in the neutral mode.

**[0023]** In another embodiment, the crossbow can include a crossbow crank comprising a drive shaft selectively coupled to a one-way bearing that allows rotation of the drive shaft and an associated spool in a first direction and impairs rotation of the drive shaft and the spool in a second direction.

**[0024]** In still another embodiment, the drive shaft can be automatically locked and unlocked relative to the one-way bearing, allowing the bearing to control operation of the drive shaft, via a brake.

**[0025]** In yet another embodiment, the brake can be axially compressible along the drive shaft to automatically lock the drive shaft and a sleeve, so they are fixed relative to one another and rotate in unison when the drive shaft is rotated in the first direction. The brake can be deactivated by operation of a crank so that the drive shaft can rotate freely relative to the sleeve and thus the bearing in a second direction.

**[0026]** In even another embodiment, a crossbow crank can comprise: a sleeve disposed in a one-way bearing; a drive shaft extending through the sleeve; a drive gear joined with the drive shaft, so the drive gear and drive shaft rotate in unison; a spool coupled to the drive gear, the spool configured to engage a cord; and a crank joined with the drive shaft. The sleeve and drive shaft can automatically lock to one another upon actuation of the crank to rotate the drive shaft in the first direction, so that the sleeve and drive shaft rotate in unison. The sleeve and drive shaft can automatically unlock from one another upon actuation of the crank to rotate the drive shaft in the second direction, so that the drive shaft rotates freely relative to the sleeve.

**[0027]** In a further embodiment, the crossbow crank can include a brake mounted along the drive shaft. The brake can be axially compressible along the drive shaft to lock the drive shaft and the sleeve with one another when the drive shaft is rotated in the first direction. This locking can occur automatically when the crank is manually actuated or rotated.

**[0028]** In still a further embodiment, the crossbow crank can include a drive nut. The hand crank can be joined with the drive nut. A brake can be disposed along the drive shaft. The drive nut can be threadably joined with the drive shaft. Manual rotation of the crank in the first direction can tighten the drive nut on the drive shaft so that the drive nut axially compresses the sleeve and the brake between the drive nut and the drive gear so that the drive shaft and sleeve automatically lock to one another upon manual actuation of the crank. Accordingly, the sleeve and drive shaft can rotate in unison in the first direction. The sleeve and drive shaft however, can be impaired from rotating in a second direction opposite the first direction.

**[0029]** In yet a further embodiment, manual rotation of the crank in a second direction opposite the first direction can loosen the drive nut on the drive shaft so that the drive nut decompresses or no longer axially compresses the sleeve and the brake between the drive nut and the drive gear. Accordingly, the drive shaft and sleeve automatically unlock from one another upon manual actuation of the crank in the second direction. As a result, the brake no longer holds the sleeve and shaft relative to one another, so the one-way bearing no longer impairs rotation of the drive shaft in the second direction, so the drive shaft and other components such as the spool can rotate in the second direction, optionally unwinding a cord from the spool to de-cock the bowstring when the crank is secured to the bowstring directly or via a sled, such as the one described herein.

**[0030]** In even a further embodiment, the brake can be mounted along the drive shaft and can comprise a first brake collar; a second brake collar; and a brake disc mounted between the first and second brake collars. The brake can be axially compressible along a longitudinal axis of the drive shaft so that the first brake collar, second brake collar and brake disc frictionally engage one another. The second brake collar can be joined with the drive shaft in a nonrotatable manner.

**[0031]** In a further embodiment, the crossbow crank can include a secondary gear rotatable in response to the drive gear and a secondary shaft joined with the secondary gear so that the secondary gear and secondary shaft rotate in unison. The secondary shaft can be offset and/or parallel to the drive shaft. The spool can be fixedly and non-rotatably mounted to the secondary shaft. In some cases, the secondary gear is the only gear on the secondary shaft, and the drive gear can be the only gear on the drive shaft.

**[0032]** In even a further embodiment, the crossbow crank can be in the form of a removeable and replaceable module that can be positioned on a left or a right side of a crossbow for left or right sided operation by a user. The module can be joined with a frame of the crossbow and can interface with one or more spool gears on which a cord can be wound to move a sled or a moving receiver.

**[0033]** In yet a further embodiment, the crossbow crank module can be fastened to the frame with fasteners, which can be removed to remove and swap the module from one side to another of the frame to allow for right or left side cranking by a user.

**[0034]** In another embodiment, a crossbow is provided including a first limb and a second limb; a bowstring extending between the first limb and the second limb; a crossbow frame extending rearward from the first limb and the second limb, the crossbow frame including a transverse crank mounting hole extending from a first surface to an opposing second surface; and a crank module comprising a sleeve disposed in a one-way bearing, a drive shaft extending through the sleeve, and a drive gear, the crank module extending through the transverse crank mounting hole in a first orientation. The crank module can be removeable and replaceable relative to the crossbow frame in a second orientation opposite the first orientation.

**[0035]** In still another embodiment, a crossbow crank can include a sleeve disposed in a one-way bearing; a drive shaft extending through the sleeve and configured to extend within the transverse crank mounting hole; a first drive gear joined with the drive shaft so the first drive gear and drive shaft rotate in unison, the first drive gear configured to engage a first secondary gear joined with a spool in the crossbow frame; and a crank joined with the drive shaft. In some applications, the sleeve, one way bearing, and drive shaft are removable from the transverse crank mounting hole together in unison in the form of a crank module. The crank module can be configured to be reversed and reinstalled in the transverse crank mounting hole in an opposite direction. The crank module can be selectively mountable relative to the crossbow frame on either a right side or a left side of the crossbow frame to provide a user with the ability to operate the crossbow crank with a crank arm in a draw mode from the right side or the left side of the crossbow frame.

**[0036]** In yet another embodiment, the crossbow crank can include a housing configured to be removably joined with a first surface of the crossbow frame and a mounting plate configured to be removably joined with a second surface of the crossbow frame, the second surface opposite the first surface. The drive shaft can extend through the transverse crank mounting hole defined by the crossbow frame such that the drive shaft protrudes beyond the first surface and the second surface. The housing and mounting plate can be reversed so that the housing is able to be removably joined with the second surface and the mounting plate is able to be removably joined with the first surface.

**[0037]** In even another embodiment, a second drive gear is joined with the drive shaft. The crank module can be mountable in a first direction in the transverse crank mounting hole, such that the first drive gear is configured to engage a first secondary gear joined with a spool in the crossbow frame, and such that the second drive gear is configured to engage a secondary gear joined with the spool in the crossbow frame. The crank module can be reversed and reinstalled in the opposite direction to the first direction in the transverse crank mounting hole, such that the first drive gear is configured to engage a second secondary gear joined with a spool in the crossbow frame, and such that the second drive gear is configured to engage the first secondary gear joined with the spool in the crossbow frame.

**[0038]** In still a further embodiment, a method of using a crossbow is provided. The method can comprise: rotating in a first direction a shaft fixedly joined with a gear in a housing, the gear being rotatably coupled to a spool so that the spool winds a cord thereon; and axially compressing a brake along the shaft during and as a result of said rotating in the first direction to fixedly join the shaft with a sleeve disposed around the shaft so that the shaft, gear and sleeve rotate in unison. The sleeve can be disposed in a one-way bearing that is joined with the housing so that when said rotating in the first direction ceases, the shaft and gear can be impaired from rotating in a second direction opposite the first direction via the one-way bearing interacting with the sleeve.

**[0039]** In yet a further embodiment, the method can comprise rotating the shaft in the first direction; and rotating the shaft in the second direction via manual input. The shaft can free spin relative to the sleeve during said rotating in the second direction so that the one-way bearing does not impair rotation of the shaft in the second direction.

**[0040]** In even a further embodiment, the method can comprise ceasing rotating the shaft in the second direction via manual input. A tension in the cord can automatically urge the shaft to rotate in the second direction after said ceasing which causes axial compression of the brake along the shaft. Accordingly, the shaft and gear can again be impaired from rotating in the second direction via the one-way bearing interacting with the sleeve.

**[0041]** In another embodiment, a crank arm can be joined with the shaft via a threaded drive nut threaded to the shaft. A tension in the cord can automatically urge the shaft to rotate in the second direction to tighten the threaded drive nut relative to the shaft. This can push or move the sleeve relative to the brake whereby the shaft and gear again can be impaired from rotating in the second direction opposite the first direction via the one-way bearing interacting with the sleeve.

**[0042]** In still a further embodiment, the crossbow crank and the de-cocking system having a sled with one or more stops both can be incorporated into a crossbow. The crank can be used to draw the bowstring from the released mode

to the drawn mode with the sled via one or more cords extending between the crank and the sled and let down the crossbow from the drawn mode to the released mode.

**[0043]** In yet a further embodiment, the crank can move the sled so the one or more stops when in the de-cocking mode, engage the stop engagement surface on the frame and/or a mounting arm of the crossbow, or some other portion of the crossbow, to arrest movement of the sled and thus the bowstring so the bowstring and/or sled do not engage the safety, allowing the safety to move from the safety on mode to the safety off mode. The one-way bearing of the crank can hold the drive shaft and drive gear, preventing them from moving or rotating in the second direction in the de-cocking mode.

**[0044]** In even a further embodiment, the safety can be converted to the safety off mode, and the trigger assembly can be actuated such that the sear converts to the fire mode, and the catch to the drop mode so that the catch no longer holds the bowstring in the drawn mode, and such that the bowstring is free to convert to the released mode but for the sled being held by the crank via the one or more cords extending therebetween. Again, the crank can hold the bowstring in the drawn mode via the one-way crank interacting with the sleeve and the drive shaft that are coupled or locked to one another, and nonrotatable relative to one another.

**[0045]** In another embodiment, the crank arm can be rotated in the second direction by a user, thereby releasing the sleeve from the drive shaft, such that the drive shaft can rotate relative to the one-way bearing in the second direction, which can allow the cord to spool off a spool coupled to the drive shaft via a secondary shaft and secondary gear. The user can controllably let down the bow string by continuing to rotate the crank arm in the second direction.

**[0046]** In still another embodiment, when rotation of the crank arm ceases, the tension on the cord by the bowstring during the transition to the released mode causes the drive shaft and sleeve to automatically lock rotationally relative to one another, and urge these temporarily secured components to attempt to rotate in the second direction, however, due to the sleeve interacting with the one-way bearing, these components are impaired from rotating in the second direction, in which case, the sled attached to the one or more cords cannot move away from the crossbow crank, and the bowstring is prevented from letting down any farther toward the released mode or configuration.

**[0047]** In yet another embodiment, a method is provided. The method can include removing a crank module from a first surface of a crossbow frame defining a crank mounting hole, the crank module comprising a sleeve disposed in a one-way bearing, a drive shaft extending through the sleeve, and a drive gear configured to rotatably couple with a spool rotatably mounted inside the crossbow frame; and installing the crank module through a second surface of the crossbow frame opposite the first surface so that the crank module extends through the crank mounting hole.

**[0048]** In even another embodiment, the method can include removing a housing within which the drive shaft extends from the first surface of the crossbow frame; removing a mounting plate from the second surface of the crossbow frame; securing the mounting plate to the first surface of the crossbow frame; securing the housing to the second surface of the crossbow frame.

**[0049]** In another embodiment, the method can include disengaging the drive gear from a first secondary gear joined with the spool during said removing; and engaging the drive gear with a second secondary gear joined with the spool during said installing, the second secondary gear being distal from the first secondary gear.

**[0050]** The current embodiments provide a crossbow and method for efficiently and safely drawing and de-cocking the crossbow.

**[0051]** These and other objects, advantages, and features of the invention will be more fully understood and appreciated by reference to the description of the current embodiment and the drawings.

**[0052]** Before the embodiments of the invention are explained in detail, it is to be understood that the invention is not limited to the details of operation or to the details of construction and the arrangement of the components set forth in the following description or illustrated in the drawings. The invention may be implemented in various other embodiments and of being practiced or being carried out in alternative ways not expressly disclosed herein. Also, it is to be understood that the phraseology and terminology used herein are for the purpose of description and should not be regarded as limiting. The use of "including" and "comprising" and variations thereof is meant to encompass the items listed thereafter and equivalents thereof as well as additional items and equivalents thereof. Further, enumeration may be used in the description of various embodiments. Unless otherwise expressly stated, the use of enumeration should not be construed as limiting the invention to any specific order or number of components. Nor should the use of enumeration be construed as excluding from the scope of the invention any additional steps or components that might be combined with or into the enumerated steps or components.

## BRIEF DESCRIPTION OF THE DRAWINGS

**[0053]** FIG. **1** is a perspective view of the crossbow of a current embodiment.

**[0054]** FIG. **2** is a perspective view of the crossbow being cocked using a sled and crank of the current embodiment.

**[0055]** FIG. **3** is a close-up view of the sled with a pair of stops on the sled in a neutral mode to draw the bowstring.

**[0056]** FIG. **4** is a partial section view of a trigger assembly including a safety, with the bowstring drawn by the sled past a catch and engaging a safety bar.

**[0057]** FIG. **5** is a partial section view of a trigger assembly with the bowstring drawn and held in a fully drawn mode and the catch in a holding mode to hold the bowstring in position, with the safety in a safety on mode to prevent a sear from actuating, and an anti-dry fire element in a lockout mode preventing the safety from moving from the safety on mode shown.

**[0058]** FIG. **6** is a close-up view of the sled with the pair of stops on the sled in a de-cocking mode and arrested against an engagement surface atop the crossbow to stop rearward movement of the sled toward the safety.

**[0059]** FIG. **7** is a partial section view of a trigger assembly with the bowstring drawn and a sled on the frame in a de-cocking mode in which an anti-dry fire protrusion has moved the anti-dry fire element to the open position when the sled is adjacent the trigger assembly, but wherein the sled is prevented from moving rearward by the stops far enough to push the sled or the bowstring against the safety so that

a gap remains between the bowstring and the safety and so the safety can still be moved to a safety off mode.

**[0060]** FIG. **8** is a partial section view of a trigger assembly with the bowstring drawn and a sled on the frame in a de-cocking mode in which an anti-dry fire protrusion has moved the anti-dry fire element to the open position when the sled is adjacent the trigger assembly, but wherein the sled is prevented from moving rearward by the stops far enough to push the sled or the bowstring against the safety so that a gap remains between the bowstring and the safety, but wherein the safety is moved from a safety on mode to a safety off mode, thereby moving into the gap and toward the bowstring.

**[0061]** FIG. **9** is a close-up view of the sled with the pair of stops on the sled still in the de-cocking mode and arrested against the stop engagement surface atop the crossbow to stop rearward movement of the sled toward the safety.

**[0062]** FIG. **10** is a partial section view of a trigger assembly with the bowstring drawn and a sled on the frame in a de-cocking mode in which an anti-dry fire protrusion has moved the anti-dry fire element to the open position when the sled is adjacent the trigger assembly, wherein the safety is in the safety off mode, wherein the trigger has been pulled and a sear is in a fire mode, with the sear safety element moving past the safety and a catch initially transitioning from a holding mode to a drop mode to release the bowstring while the bowstring is still held by the sled in the de-cocking mode so that the bowstring does not thereby move into the gap and toward the bowstring.

**[0063]** FIG. **11** is a close-up view of the sled with the pair of stops on the sled still in the de-cocking mode but with the stops and sled moving slightly forward under operation of a crank mounted on the stock of the crossbow.

**[0064]** FIG. **12** is a partial section view of a trigger assembly with the bowstring drawn and a sled on the frame in a de-cocking mode, with the sled moving forwardly under control of the crank and the safety in the safety off mode, wherein the trigger has been pulled and a sear is in a fire mode, with the sear safety element past the safety and the catch fully transitioned from the holding mode to the drop mode such that the bowstring moves forwardly with the sled in the de-cocking mode.

**[0065]** FIG. **13** is an upper perspective view of the sled with the stops in a neutral mode, used for example in FIG. **2** to cock the crossbow.

**[0066]** FIG. **14** is an upper perspective view of the sled with the stops in a de-cocking mode, used for example in FIG. **6** to de-cock the crossbow.

**[0067]** FIG. **15** is a top view of the sled with the stops being moved from a neutral mode to the de-cocking mode.

**[0068]** FIG. **16** is a bottom perspective view of the sled showing a bowstring engaged by the sled and a cord pulling on the sled in either a cocking mode or a de-cocking mode.

**[0069]** FIG. **17** is a perspective view of a crossbow crank being installed on a crossbow.

**[0070]** FIG. **18** is a partially exploded view of the crossbow crank.

**[0071]** FIG. **19** is a further exploded view of the crossbow crank.

**[0072]** FIG. **20** is another exploded view of the crossbow crank.

**[0073]** FIG. **21** is a section view of the crossbow crank with a drive shaft locked relative to

**[0074]** a sleeve via a brake, so that a one-way bearing allows rotation of the drive shaft, a drive gear and one or more spools in a first direction, but impairs rotation of the drive shaft, the drive gear and one or more spools in a second direction opposite the first direction.

**[0075]** FIG. **22** is a section view of the crossbow crank with a drive shaft spinning freely relative to a sleeve and a one-way bearing so that the drive shaft and a drive gear and one or more spools can rotate in a first direction and/or an opposite direction, without being impaired by the one-way bearing in either direction.

**[0076]** FIG. **23** is a first perspective view of a first alternative embodiment of the crossbow including a moving receiver and an internally mounted and reversible modular crossbow crank having a one way bearing.

**[0077]** FIG. **24** is a second perspective view of the crossbow thereof including the reversible modular crossbow crank projecting from a first or right side of the crossbow.

**[0078]** FIG. **25** is a partially exploded view of a crank plate removed from a stock of the crossbow to swap the reversible modular crossbow crank from the right side to the left side for different handed cranking.

**[0079]** FIG. **26** is a partially exploded view of a crank housing, a one way bearing, and gears removed from the stock of the crossbow to swap the reversible modular crossbow crank from the right side to the left side for different handed cranking.

**[0080]** FIG. **27** is a top view of the crossbow with the reversible modular crossbow crank removed and being swapped from the right side to the left side for different handed cranking.

**[0081]** FIG. **28** is a section view of the crossbow and the reversible modular crossbow crank engaging a spool from which a web extends and is joined with a moveable receiver.

**[0082]** FIG. **29** is a view of the reversible modular crossbow crank engaging the spool and the web secured to the moveable receiver.

**[0083]** FIG. **30** is a partial section view of the reversible modular crossbow crank on a right side of the stock of the crossbow.

**[0084]** FIG. **31** is a partial section view of the reversible modular crossbow crank swapped to the right side of the stock of the crossbow.

## DETAILED DESCRIPTION OF THE CURRENT EMBODIMENTS

**[0085]** A current embodiment of the crossbow with a de-cocking system and a crossbow crank is shown in FIGS. **1-12** and generally designated **10**. The crossbow **10** shown in FIG. **1** is shown as an archery crossbow. It will be appreciated that the de-cocking system and crossbow crank as described herein can be used with any type of projectile shooting device that uses or shoots an arrow, bolt, or other projectile. As used herein an arrow can refer to an arrow, a bolt, or some other elongated projectile. As generally shown in FIG. **1**, the crossbow **10** is shown with its bowstring **11** in a drawn mode, held in place by a trigger assembly **20** that is mounted within a barrel or frame **12** of the crossbow. The bowstring **11** can be selectively released via the trigger assembly **20** to shoot the arrow A from the crossbow. As the crossbow transitions and the bowstring moves from the drawn mode shown in FIG. **1**, to an undrawn mode or released mode, which are used interchangeably herein, the bowstring **11** moves forward until it extends generally

perpendicular to the frame **12** and the rail **13** upon which the arrow A rests or moves as it is propelled by the bowstring.

**[0086]** As shown in FIG. **1**, the crossbow **10** can include a first limb **14**A and a second opposing limb **14**B disposed that opposite sides of the barrel or frame **12** and the rail **13**. To each of these respective limbs **14**A and **14**B, respective cams **15**A and **15**B can be joined. These cams **15**A and **15**B can be any type of cam, pulley, disc and/or round or oval member capable of rotating about the respective axes **15**AX and **15**BX. To these respective cams, the bowstring **11** can be joined and journaled in respective tracks of the cams. The bowstring generally can unwind or unfurl from the respective cams on opposing sides of the frame when moving from an undrawn mode, also referred to as a released mode herein, to a drawn mode or cocked mode as shown in FIG. **1**. Generally, the bowstring can extend transverse to the frame and rail, between the respective cams in most if not all of these modes. Further, power cables **11**P can be joined with and extend from one cam **15**A to the other cam **15**B to transfer energy stored in the limbs **14**A and **14**B in a conventional manner to the bowstring **11** to shoot the arrow A from the crossbow **10**.

**[0087]** The crossbow **10**, as mentioned above, can include the barrel or frame **12** which can extend rearwardly from a riser **16** of the crossbow. An optional stirrup **16**S can be joined with the riser **16** and/or the frame **12** to allow a user to stabilize the crossbow **10** as it is drawn and/or de-cocked as described below. Limbs **14**A and **14**B can be fastened or secured to the riser **16** and/or the frame **12**. The barrel or frame **12** can extend rearward from the riser and/or can be integral with the riser and/or the limbs depending on the configuration of the same. As shown in FIG. **1**, the riser can extend rearwardly past the limbs and cams and is generally of an elongate structure. The frame **12** can include an internal compartment **12**C as shown in FIG. **4**. This internal compartment can house the trigger assembly **20** described below. The frame **12** can include and/or can be joined with a grip **17**, which as shown can extend downward from the frame **12** generally between the riser **16** and a stock **18** that is secured to the rearward portion of the frame **12**. The grip **17** can be in the form of a pistol grip and ergonomically configured to receive a user's hand allowing the user to grip, manipulate, hold and/or steady the crossbow **10** in a variety of configurations.

**[0088]** The frame **12** optionally can include a mounting arm **19**. This mounting arm **19** can be joined with the frame **12** directly or joined with a trigger assembly **20** and secured thereto via a system of fasteners **20**F. The mounting arm **19** in FIGS. **1** and **3** can be joined within the upper portion of the trigger assembly **20**, sometimes referred to as a trigger box, via one or more fasteners **19**F. The fasteners can be in the form of screws that are screwed into corresponding threaded holes in the upper portion **20**U of the trigger box **20**. The mounting arm **19** can include a forward end **19**F and an opposing rearward end **19**L closer to the stock **18**. The forward end **19**F can extend in any cantilevered manner forwardly over the rail **13** and the frame **12**. The mounting arm **19** can include an arrow holder **19**A that can extend downwardly from a lower surface **19**U of the mounting arm **19**. This arrow holder **19**A as shown can include a button **19**B that can engage a portion of the arrow A when the arrow is disposed on the rail **13** and generally within a channel **13**C of the rail to hold the arrow down against the rail before it is shot from the crossbow. This can ensure that the arrow does not inadvertently become dislodged or drop out of the crossbow during transport. Although shown as a button **19**B, the arrow holder **19**A can include bristles, a plunger, or any other type of element that can touch, contact, or engage the arrow A with a low amount of force sufficient to hold the arrow in place along the rail **13**. Of course, in some applications the arrow holder can be absent from the crossbow.

**[0089]** As shown in FIG. **4**, the mounting arm **19** also can include an upper portion of rail that includes multiple ridges **19**R and notches **19**N. This rail can be in the form of a picatinny or dovetail rail and constructed to receive a sighting device (not shown) such as a scope, reflex sight, red dot, or other type of sighting device. The mounting arm **19** as mentioned above can be secured and/or can be integral with the trigger assembly **20** at its rearward end **19**L. Adjacent to the mounting arm **19** or the trigger assembly **20** can be a sled limiter, also sometimes referred to as a sled engagement surface SES. This sled limiter or sled engagement surface SES can be configured to engage one or more stops **31**, **32** of the sled **30** shown in FIG. **2** in a de-cocking mode using the de-cocking system as described below. As shown in FIG. **4**, this sled engagement surface SES can be a portion of the trigger assembly or trigger box **20**. Of course, depending on the application, the sled engagement surface SES can form or be a portion of the mounting arm **19**, the frame **12** and/or the rail **30** or some other component extending adjacent the rail and frame near the trigger assembly **20**.

**[0090]** Optionally, the sled engagement surface SES can be in the form of a wall or surface which can be flat, planar, curved, angled or of some other contour or configuration. The sled engagement surface can be configured again to engage the stops **31**, **32** of the sled **30** and generally impair reward movement of the sled **30** toward the stock and/or further rearward relative to the trigger assembly. As used herein, the word impair can include an operation to impair, arrest, stop, interfere with (fully and/or partially) movement of the sled and/or components thereof. The operation and interaction of the sled engagement surface SES with the sled and in particular the stops **31** and **32** are described further below.

**[0091]** Turning to the trigger assembly **20**, its various components will be described with reference to FIG. **4**. The trigger assembly **20** can include or be coupled to a trigger **21**T. The trigger **21**T can be adjacent a grip **17** and can extend inward into a portion of the compartment **12**C defined by the frame **12**. The trigger **21**T can be joined pivotally with the frame **12** via a pivot pin **21**P**1**. The trigger **21**T can include a second pivot pin **21**P**2** that joins the trigger **21**T with a trigger bar **21**B. The trigger bar **21**B can extend rearward from the trigger and the grip **17** toward the trigger assembly or trigger box **20**. The trigger bar can include a rearward end **21**R that couples to a sear **22** of the trigger assembly **20** at a socket **21**S. The socket **21**S can define a hole that receives a ball **22**B of the sear **22** to operably connect the trigger bar and thus the trigger with the sear **22**. Of course, other constructions can be used to join the trigger and the sear depending on the application. Optionally, the trigger bar can be removable from the sear **22**, for example the ball **22**B can be removed from the socket **21**S to provide removal of the trigger box **20** from the frame **12** to provide service, repair and/or replacement of the trigger assembly **20** relative to the crossbow **10**.

**[0092]** The sear **22** can be selectively rotatable about a pivot pin **22**P and a corresponding pivot axis. The sear can include a ball arm **22**BA that extends down to the ball **22**B. The ball arm can include a projection **22**C that engages a biasing element **22**S which can be in the form of a coil spring, leaf spring or elastomeric element. The spring **22**S can be held in a cup **22**F and can generally urge the sear to rotate in direction R**1** about the pin **22**P. The spring **22**S also can provide resistance to a force F**1** exerted on the trigger **21**T. The sear can include a sear catch arm **22**R that extends forwardly to a search catch engagement surface **22**E. This engagement surface **22**E can be configured to engage a bowstring catch **23** of the trigger assembly. The engagement surface **22**E can be highly polished as can be a corresponding catch engagement surface **23**E of the catch **23** so that the two members can slide and move smoothly and cleanly with regard to one another during actuation as described below. The sear also can include a safety engagement portion **22**K that extends rearwardly from the pin **22**P. The safety engagement portion **22**K can include a rounded or ball shaped end **22**B that interfaces with a receiver hole **22**H in a sear safety pin **22**SP.

**[0093]** The sear safety pin **22**SP shown in FIGS. **4**-**5** can extend vertically to selectively interact with the safety **24** of the trigger assembly **20**. The sear safety pin **22**SP can move upward and downward in the sear safety pin slot **22**SPS depending on the movement of the sear **22** as described below. The upper end **22**SPE of the sear safety pin **22**SP can be blocked to prevent or impair upward movement via its engagement with the lower surface of a safety bar **24**B or the safety **24** in general. For example, the rearward portion **24**R of the safety **24** can be in the position shown in FIG. **4** in which the safety blocks movement of the sear safety pin **22**SP and thus rotation of the sear **22** about the pin **22**P in direction R**1**. As a result, the trigger **21**T cannot activate the sear to release the bowstring catch **23**.

**[0094]** As shown in FIG. **4**, the sear **22** is in the cocked mode, thereby preventing the catch **23** from releasing the bowstring, and the safety is in the safety on mode in which it interferes with movement of the sear safety pin **22**SP in an upward direction and thus does not allow rotation of the sear in direction R**1**. As mentioned above, the catch **23** is rotatable about the pin **23**P. This rotation can be biased by a spring **23**S which can generally return the catch to the position shown in FIG. **4** after the bowstring **11** is released from a drawn mode to the released or undrawn mode, for example, when the bowstring is used to shoot an arrow or is de-cocked as described below.

**[0095]** The catch **23** can include a bowstring engagement surface **23**B above the pivot **23**P and generally above the sear engagement surface **23**E. This bowstring engagement surface **23**B can engage the bowstring and when the catch **23** is engaged against the sear can hold the bowstring in the drawn mode. Additional catches can be joined with the catch **23** as shown to hold the bowstring in multiple locations, depending on the application. The bowstring catch is shown disengaged from the bowstring **11** in FIG. **4** because the sled **30** has been used to draw the bowstring **11** to its maximum position, engaging the bowstring **11** against the safety **24**, before this sled is removed from the bowstring. In this position, the bowstring **11** might not engage the bowstring engagement surface **23**B of the catch, and instead might engage the forward-facing end **24**F of the safety **24**. As shown in this position in FIG. **4**, when the sled has pulled the bowstring beyond full draw, the safety **24** generally is not movable in direction F**2**, so it cannot be disengaged from the safety on mode. The safety pin **22**SP thus cannot be moved upward, and sear **22** cannot rotate in this condition.

**[0096]** The trigger box **20** can include the safety **24** as mentioned above. The safety **24** can be moveable, for example, slidable in a safety slot **20**SS defined by the trigger assembly box or housing **20**BH. The safety can be configurable in the safety on mode shown in FIGS. **4** and **5** or alternatively in the safety off mode shown in FIGS. **8** and **10**. In the safety on mode, the safety obstructs movement upward of the safety sear pin **22**SP which prevents rotation of the sear **22** in direction R**1**, so that the sear engages the catch **23** to keep the catch in the holding mode as shown for example in FIG. **5**. The safety also is operable in the safety off mode shown in FIGS. **8** and **10** such that the sear can be converted to the fire mode shown in FIG. **10** and the catch **23** can be converted or moved to the drop mode shown in FIG. **12** to release and allow the bowstring to transition from the drawn mode to the released or undrawn mode in either a shooting operation or a de-cocking operation of the crossbow as described below.

**[0097]** Optionally, the safety **24** can be aligned with and can move against a common plane P**1** with the bowstring **11**. Further optionally, the safety **24** can slide primarily along or linearly within that plane Pl without rotating. The safety slot **20**SS also can be aligned with and/or intersected by the plane Pl as shown. The safety **24** can slide linearly within this safety slot **20**SS as shown. The safety can interface with a detent ball **24**B that is urged via a spring **24**S into a safety on notch **24**SO when the safety is in the safety on mode shown in FIG. **4** or into a safety off notch **24**SF when the safety is in the safety off mode shown in FIG. **8**. The interface of the ball and notches can secure the safety **24** in the safety on mode and/or safety off mode depending on the notch. Of course, other mechanisms can be used to secure, hold or locate the safety **24** in the safety on mode and the safety off mode.

**[0098]** The crossbow **10** optionally can include an anti-dry fire element **25** that can prevent inadvertent or unintentional dry firing of the crossbow **10** when an arrow A is not satisfactorily engaged with the bowstring or is absent from the crossbow altogether. The anti-dry fire element can be selectively movable between a lockout position shown in FIG. **5**, which prevents the safety **24** from being transitioned from the illustrated safety on mode, where the safety **24** will not allow the sear **22** to rotate, and an open position shown in FIG. **10** that permits the safety to move to the safety off mode shown there for de-cocking, or for shooting an arrow from the crossbow. As shown in FIG. **5**, the anti-dry fire element **25** can pivot about a pivot pin **25**P and generally about a pivot axis **25**PA. The anti-dry fire element **25** can be disposed generally above an arrow when the arrow is engaged via its nock with the bowstring **11**, which is held in place in the drawn mode shown in FIG. **5** via the catch **23** in a holding mode. The anti-dry fire element **25** can include an arm **25**F that extends toward and selectively is placed against or adjacent the forward-facing end **24**F of the safety **24**. As shown in FIG. **5** in this configuration, the safety **24** cannot be moved forwardly from the illustrated safety on mode, to a safety off mode. Likewise, the safety cannot be moved forward toward the bowstring **11** held by the catch **23**.

**[0099]** In this lockout position of the arm **25**F and the anti-dry fire element **25** in general, the safety **24** is locked out from being able to transition from the safety on mode shown in FIG. **5** to the safety off mode shown in FIG. **10**. The anti-dry fire element arm **25**F can be biased to the locked mode via a biasing element **25**S which can be in the form of a spring pressing against the arm **25**F and seated in a recess **25**R. Another portion of the spring **25**S can be disposed in a cup **25**C of the trigger box housing **20**BH. When an arrow A or the protrusion **36** of the sled **30** is moved toward the bowstring **11**, for example, as shown in FIG. **5**, the arrow or sled will exert a force F**3** upon a ramp **25**M of the anti-dry fire element **25**. This force F**3** causes the arm **25**F to move upward in direction R**2** and thereby disengage or move out of an interference position relative to the safety **24**. The spring **25**S under such engagement force F**3** also can compress slightly. When the arm **25**F is no longer positioned in the lockout position or generally is in the open position after moving in direction R**2**, the anti-dry fire element will allow the safety **24** to slide or otherwise move forwardly from a safety on mode to a safety off mode.

**[0100]** As mentioned above, the crossbow optionally can be supplied with a sled **30** which can be used to cock and de-cock the crossbow **10**. The sled can be used to move the sled from a released or undrawn mode, where the bowstring is all the way forward extending between the cams in a generally perpendicular manner, to a fully drawn or unreleased mode shown for example in FIG. **1**. The sled in this embodiment optionally can be used as part of a de-cocking system for de-cocking the crossbow from the drawn mode to a released or undrawn mode.

**[0101]** With reference to FIGS. **13-16**, the sled will now be described in further detail. Optionally, the sled **30** can include a body **33** which can be of a generally U or V shape. The body can include rearward extending first arms **31** and **32** disposed on opposite sides of a sled longitudinal axis SLA. The body **33** can further include a guide **34** which can have a first guide rail **34**A and a second guide rail **34**B disposed on opposite sides of the sled longitudinal axis SLA. These rails can cooperate to form a recess **24**R which is sized to receive an upper portion of the rail **13** or the barrel **12** of the crossbow **10**. The recess **34**R can be of a width W**1** that is greater than a width W**2** of the rail **13**. Optionally, the guide **34** can include an insert **34**I that has built in slots **34**S they can receive corresponding protrusions or rails along the rail **13** or frame **12** to assist further in smooth sliding along the rail as the sled **30** is used to draw and/or de-cock the crossbow **10**.

**[0102]** With further reference to FIG. **16**, the sled **30** can be configured so that the body **33** includes one or more bowstring engagers **35**A and **35**B. These bowstring engagers can be in the form of channels, slots, recesses, grooves, or tracks that extend rearward from a forward portion of the body **33** and rearward of a protrusion **36** that is configured to move the anti-dry fire element of the crossbow to the open position from its lockout position when the sled is adjacent the trigger assembly **20**. The bowstring engagers **35**A and **35**B can be configured to allow the bowstring **11** to wrap in a U shape as shown in FIG. **16** around the rearward portion of the sled **30** but forward and optionally above the cord engagement elements **37**A and **37**B. These cord engagement elements can be joined with the rearward portions of the respective arms **31** and **32**. Further optionally, these cord engagement elements can include rollers **37**BR and **37**AR that are mounted on respective pins **37**BP and **37**AP that extend through the respective arms **31** and **32**. The rollers can rotate relative to the arms to facilitate movement of the cord and in particular portions of the cord C**1** and C**2** relative to those rollers and the sled when the cord portions C**1** and C**2** are under tension by a user pulling manually on the cord and/or a crank **50** associated with the crossbow **10** as described below. As used herein, a cord or a portion of the cord can mean a cord, rope, string, set of filaments, cable, strap, web, ribbon, or any other elongated element.

**[0103]** The sled **30** shown in FIGS. **13-16** optionally can be outfitted with one or more stops to allow the sled to assist in drawing or cocking the crossbow, as well as letting down or de-cocking the crossbow, in particular the bowstring, from a drawn mode to a released mode or undrawn mode. The one or more stops can include a first stop **38** and a second stop **39**. The first and second stops each can be selectively operable in a neutral mode shown in FIGS. **4** and **13**, in which the first and second stops do not interfere with rearward movement of the sled **30** along the barrel **12** or rail **13**. This is so that the bowstring **11** can move completely to the drawn mode and past the catch **23**, and more particularly past the catch bowstring engagement surface **23**B during a drawing operation or a de-cocking operation.

**[0104]** With the stops in the neutral mode, the user can pull on the sled **30** via the cord and its portions C**1** and C**2** such that the bowstring **11** actually contacts the safety **24** and in particular a front surface **24**F of the safety as shown in FIG. **4** at a maximum drawing extent of the bowstring during a drawing operation with the sled. However, when the sled is disengaged from the bowstring and removed from the rail and frame, the bowstring **11**, shown in FIG. **5**, can retract forward and can be spaced a distance D**1** from the forward-facing end **24**F of the safety **24**. This distance D**1** can correspond to a gap between the bowstring **11** and the forward-facing end **24**F of the safety. This gap between the bowstring and the safety **24** can be sized to accommodate the safety while transitioning the safety from the safety on mode to the safety off mode as described further below.

**[0105]** Returning to the sled and stops shown in FIGS. **13** and **14**, each of the stops can generally be identical but disposed on opposite sides of the sled longitudinal axis SLA so only the first stop **38** will be described in detail here. The first stop **38** can include a first pivot axis **38**P**1** about which it can rotate direction R**3**, generally toward the sled longitudinal axis. The first stop can be fastened to the body **33** via a stop fastener or pin **38**P. This fastener or pin can be of any configuration to allow the first flange **38**F to rotate about the pivot access **38**P**1**. The first flange **38**F can include a stop block **38**B which can include a first engagement surface **38**E. The first flange, stop block **38**B and engagement surface **38**E each can rotate together with the flange about the pivot axis **38**P**1** in direction R**3**, from the neutral mode shown in FIG. **13** which is used to draw the archery bow, to a de-cocking mode shown in FIG. **14**.

**[0106]** In the de-cocking mode, the flange, stop block, and/or first engagement surface can engage a stop limiter or sled engagement surface SES described above or some other component of the barrel, rail, trigger box, or mounting arm that is generally disposed along a travel path of the stop block when the stop block is deployed to the de-cocking mode. This is shown, for example, in FIG. **6**, where the crossbow **10** is in the initial stages of a de-cocking mode. There, the first stop **38** and the second stop **39** each are

deployed, for example, as further shown in FIG. **14**. In this configuration, the respective and first engagement surface **38**E and the second engagement surface **39**E are each deployed to the de-cocking mode. In this mode, the stops and respective flanges and engagement surfaces are each on opposing first and second sides of the rail, opposite one another. These stops and engagement surfaces are configured to simultaneously engage the stop engagement surface SES in the de-cocking mode. As a result, with these engagement surfaces **38**E and **39**E engaging, contacting, or pushing against the sled engagement surface SES, this engagement and contact will impair and/or completely arrest movement of the sled so that it can no longer move rearward. This is further shown in FIG. **7** where the stop **38** and the stop engagement surface **38**E engages the sled engagement surface SES as the sled **30** is used to engage the bowstring **11** during a de-cocking mode. As this occurs, the bowstring **11** also enters into the respective bowstring guides or engagers **35**A and **35**B.

**[0107]** Optionally, with reference to FIGS. **6**, **13** and **14**, the stops **38** and **39** can include respective stop longitudinal axes **38**LA and **39**LA. In the neutral mode of the stops **38** and **39**, shown in FIG. **13**, the stop longitudinal axes **38**LA and **39**LA can be generally parallel to the frame **13** and the sled longitudinal axis SLA. In the de-cocking mode, the stops **38** and **39**, shown in FIGS. **6** and **14**, and the stop longitudinal axes **38**LA and **39**LA can be rotated such that these stop longitudinal axes are substantially perpendicular to the sled longitudinal axes SLA and substantially perpendicular to the barrel or frame **12** and/or the rail **13** and/or the crossbow longitudinal axis LA. These stops can rotate about the respective pivot axis **38**P**1** and **39**P**1**, which optionally can be substantially vertical when transitioning and moving the stop longitudinal axes from the parallel to the frame configuration to the substantially perpendicular to the frame configuration in the de-cocking mode. Of course, when the respective pivot axes of the stops are oriented differently, the movement of these stops can change as well.

**[0108]** Although the sled **30** is shown with first and second stops on opposite sides of the sled longitudinal axis SLA that generally engage a portion of the trigger assembly or box **20**, the stops can be attached in different locations or positions on the sled and the sled engagement surface can be disposed on different components or portions of the crossbow. For example, the stops can include one or more stops that are joined with the sled and are movable from first position to a second different position. The first position can be out of the way of and not contact any portion of the trigger box, mounting arm, frame, or other component of the rail. The second position of the stop can be such that when it is moved, the stop or a portion thereof engages or contacts some portion of the trigger box, mounting arm, frame, or other component of the rail to impair or otherwise arrest or stop rearward movement of the sled toward the safety **24**. Regardless of the configuration of the stops, in the de-cocking mode, they will enable the sled to engage the bowstring **11** as shown in FIG. **7** while the sled is in the rearmost position, being drawn by the cord and its respective cord portions C**1** and C**2** discussed above. In this rearmost position, the bowstring **11** remains out of contact and disengaged from the safety **24** and in particular the safety bar **24**B and its forward most end **24**F.

**[0109]** As mentioned above, the forward most end **24**F can be spaced at distance D**1** from the bowstring **11**. This distance D**1** can be greater than the thickness T**1** of the sear safety pin **22**SP such that when the forward end **24**F of the safety bar **24**B moves forward reducing the distance D**1** between it and the bowstring **11**, the sear safety arm can be moved upward past the rearward end **24**R of the safety bar **24**B as shown, for example, in FIG. **8**. In some cases, the safety moves closer to the bowstring, thereby reducing the distance D**1** between the bowstring and the forward end of the safety in the de-cocking mode, particularly when the safety is converted to the safety off mode. In other cases, as shown in FIG. **8**, the forward-facing end **24**F may actually contact the bowstring **11** when the safety is converted from the safety on mode shown in FIG. **7** to the safety off mode shown in FIG. **8**. Of course, in other applications, contact between the forward end **24**F of the safety bar **24**B and the bowstring **11** does not occur and a small gap having a distance less than the distance D**1** remains between the bowstring and the forward facing end **24**F of the safety bar

**[0110]** Further optionally, during the transition of the safety bar **24**B and the safety **24** in general from the positions in FIG. **7** which is a safety on mode, to the safety off mode shown in FIG. **8**, the sled **30** can remain stationary and the stop engagement surfaces **38**E and **39**E can remain in contact with, engaging or immediately adjacent the sled engagement surface SES. The bowstring **11** also can continue to have its same tension during this transition. The cord and its portions C**1** and C**2** also can maintain the same tension T therein as the safety is converted from the safety on mode to the safety off mode.

**[0111]** A method of using the crossbow **10** of the current embodiment, and in particular a method of de-cocking the crossbow during a de-cocking operation will now be described in further detail. Generally, the method can comprise pulling on a bowstring that is in a drawn mode with a sled including a stop so the stop engages a limiter on the crossbow and ceases movement of the sled and stop relative to a frame of the crossbow in a de-cocking mode, leaving a first distance between the bowstring and a safety bar, without the sled and stop engaging the safety bar; moving the safety bar toward the bowstring to reduce the first distance to a second distance between the bowstring and the safety bar, the second distance being less than the first distance; pulling a trigger so that a catch disengages the bowstring; and transitioning the bowstring to an undrawn mode while the sled engages the bowstring to de-cock the crossbow.

**[0112]** Optionally, the method can include manually engaging the safety to slide a safety bar in a slot so that a forward face of the safety bar moves toward the bowstring without engaging the bowstring during the moving step. In some cases, the method can include manually sliding the safety bar toward the bowstring while the stop is in the de-cocking mode, without any part of the sled engaging the safety bar. The method can further include transitioning the stop from the de-cocking mode to a neutral mode by rotating the stop toward another stop on the sled after the crossbow is de-cocked and the bowstring is in the undrawn mode; and drawing the bowstring from the undrawn mode to the drawn mode while the stop is in the neutral mode.

**[0113]** Turning to FIGS. **1-12**, the method can include converting the crossbow **10** from a fully drawn mode to a released mode or undrawn mode where the bowstring is fully released and no longer held by the trigger assembly **20**. The method can begin as shown in FIG. **1** where the crossbow **10** is fully drawn and an arrow A is disposed on the

rail **13**, fully engaged with the bow string **11** which is in the drawn mode being held by the catch **23** of the trigger assembly **20**. The arrow A can be removed from the rail so that the crossbow **10** is readied for de-cocking the bowstring from the draw mode to the released or undrawn mode. When the arrow A is removed from the rail **13** and frame **12**, the trigger assembly **20** can be in the configuration shown in FIG. **5**. There, the sear **22** is in the cocked mode and holds and engages the catch **23** so that the catch is still in the holding mode shown there, holding the bowstring **11** in the drawn mode. The safety **24** is still in the safety on mode which engages the sear safety pin or otherwise prevents it from moving upward in the configuration shown in FIG. **5**.

**[0114]** With the arrow A removed, the force F**3** also is removed from the anti-dry fire element such that the spring **25**S pushes the arm **25**F downward in front of the forward end or face **24**F of the safety **24** so that the safety cannot be actuated from the safety on mode to the safety off mode. The bowstring **11** remains secured via the catch **23** with the bowstring engagement surface **23** being engaged fully by the bowstring **11**, which again is under tension. A significant force is thus exerted against that catch **23** due to energy stored in the limbs.

**[0115]** As shown in FIG. **2**, a crank **50** can be installed relative to the stock **18** and the crossbow **10** in general. With further reference to FIG. **17**, the stock **18** can define a hole, aperture other feature that receives a projection **18**P associated with the crank **50**. The interface of the projection **18**P and the hole **18**H can be sufficient to secure the crank **50** to the crossbow **10**. The cord portions C**1** and C**2** can extend forwardly from the crank **50** and can be joined with the bowstring engagement elements of the sled **30**. Another portion of the cord can extend through a hole defined by the projection **18**P and forwardly to connect with the other cord portions C**1** and C**2**.

**[0116]** The crank can be actuated to move the sled **30** to the position shown in FIG. **6**. There, as mentioned above, the sled can be in the de-cocking mode along with the first and second stops **38** and **39**. When the sled is drawn rearward with the cord and its portions C**1** and C**2** toward the brake **50** via a user cranking the crank arm **50**RM of the crank **50**, the protrusion **36** of the sled **30** can engage the ramp **25**M of the anti-dry fire element **25** such that it rotates in direction R**2** against the bias of the spring **25**S. When this occurs, the arm **25**F of the anti-dry fire element moves upward, generally from the position shown in FIG. **5** to be positioned shown in FIG. **7**, such that the arm **25**F is no longer in front of and cannot interfere with movement of the safety **24** and/or the safety bar **24**B thereof. The anti-dry fire element and the arm **25**F therefore are no longer in front of the forward end **24**F of the safety.

**[0117]** With the stops **38** and **39** in the de-cocking mode, rearward movement of the sled **30** via tension in the cord portions C**1** and C**2** exerted by the crank **50**, if optionally included, or tension in the cord portions exerted by a user manually pulling on the cord and thus the sled **30**, can be impaired. In particular, as shown in FIG. **7** rearward movement of the sled can be completely arrested and stopped when the stops **38** and **39** engage the stop engagement surface SES or some other stop limiter that is associated with the trigger assembly **20**, frame **12**, rail **13** or mounting arm **19** depending on the application. Accordingly, the sled will not push the bowstring **11** against or into engagement with the safety **24** and/or its forward end **24**F. As further shown in FIG. **7**, there can remain a distance D**1** between the bowstring **11** and the front forward face **24**F of the safety. In this configuration, the safety **24** can remain in the safety on mode, however no part of the sled or the bowstring is engaging the safety **24**. Thus, if desired by a user, the user can switch the safety, thereby moving it from the position shown in FIG. **7**, to, for example, the position shown in FIG. **10** which corresponds to the safety off mode. In doing so, the bowstring is out of the path of movement of the safety and does not interfere with its satisfactory movement. Optionally, as described below, when the crank **50** is used to move the sled via the cord and its portions C**1** and C**2**, the crank can automatically lock so that the cord portions C**1** and C**2** will not unwind or unspool from the crank, and thus the cord portions can hold the sled and bowstring under a constant force while the de-cocking operation is commenced and continues.

**[0118]** With the sled **30** in the de-cocking mode and the stops **38** and **39** against the stop engagement surface SES or stop limiter, the safety as mentioned above can be converted from the safety on mode shown in FIG. **7** to the safety off mode shown in FIG. **8**. To do so, again, a user can simply engage the safety shown in FIG. **6** and move it forward in direction R**4** as shown in FIG. **8**. In doing so, the forward end **24**F of the safety **24** and in particular the safety bar **24**B, optionally can move closer to the bowstring, reducing the distance D**1** between the bowstring and that forward end. The safety detent **24**D also can move from the forward notch to the second or rearward notch **24**SF of the safety and/or safety bar **24**B. The rear end or portion **24**R of the safety also can move forwardly within the safety slot **20**SS such that the rear end **24**R clears the sear safety pin **22**SP. In this configuration, the sear safety pin **22**SP can move upward and optionally into the safety slot **20**SS upon movement thereof via the sear **22** which can be affected via movement of the trigger **21**T as described below.

**[0119]** With reference to FIGS. **9** and **10**, the sled **30** can remain in place, held by the crank **50**, holding the bowstring **11** in a fixed position even though the bowstring exerts significant forward force on the sled. The stops **38** and **39** remain engaged with the stop engagement surface SES to prevent any further movement of the bowstring **11**. The safety **24**, in particular the safety bar **24**B, remains forward as shown. The anti-dry fire mechanism remains disengaged from the safety **24** via the protrusion **36** of the sled. In this condition, a user can exert the force F**1** on the trigger **21**T which in turn moves the trigger bar **21**B rearward in direction R**7**. This rotates the sear **22** about the pivot pin **22**P which in turn engages the sear safety pin **22**SP moving it up in direction R**6**. Again, because the safety is in the safety off mode, the sear safety pin **22**SP can move into the safety slot **20**SS behind the rear surface **24**R of the safety bar **24**B. The engagement surface **22**E of the sear also moves downward out of engagement with the engagement surface **23**E of the catch. As a result, the catch is free to rotate in direction R**8** under any force exerted upon the catch via the bowstring **11**.

**[0120]** With reference to FIGS. **11** and **12**, the de-cocking system continues to de-cock the crossbow **10**, letting the bowstring move from the drawn mode to the released or undrawn mode generally in direction R**11**. The bowstring **11** also remains under a very high tension when moving in this direction R**11** due to the energy stored in the limbs and applied via the limbs and cams to the bowstring **11**. The crank **50**, however as described below can counter this force

selectively based on input from the user. Optionally, the user rotates the crank arm **50**RM in the direction R**9**. This allows the cord and its portions C**1** and C**2** to unwind from the crank **50** in directions R**10**. As a result, the sled **30** moves with the bowstring **11** forwardly along the frame **12** and rail **13**, toward the riser of the crossbow. This let down of the bowstring, however, again is selectively controlled by the crank as described below. As shown in FIG. **12**, because the catch **23** is allowed to move in direction R**8**, without the sear **22** engaging the catch any longer, that catch **23** can allow the bowstring **11** to ride over it and effectively release the bowstring. The catch **23** thus no longer holds the bowstring in the drawn mode because the catch is effectively in its drop mode. In the condition shown in FIG. **12**, the sear also is in the fire mode, with the safety in the off mode. The anti-dry fire element is also in a lockout position. Of course, as the protrusion **36** of the sled **30** moves farther forward, the anti-dry fire element **25** and in particular the arm or finger **25**F can move downward to touch a portion of the safety **24** and/or the safety bar **24**B. The movement of the sled forwardly toward the riser can continue, with the crank **50** being operated via rotation of the crank arm **50**RM moving in direction R**9** until the bowstring is in its released mode or undrawn mode.

**[0121]** After this is completed, the bowstring can be considered de-cocked. When it is de-cocked, the sled can be disengaged from the bowstring and the crank **50** with their respective cord joined with the sled can be removed from the crossbow **10** for storage until the sled and crank are used again to draw the bowstring from the release mode to a drawn mode during a cocking operation of the crossbow. Of course, with the above de-cocking operation, a user need not shoot the arrow A shown in FIG. **1** from the crossbow to effectively convert the bowstring from the drawn mode to the released mode. Further, it will be appreciated that after the de-cocking operation, the trigger assembly **20** can be reset to a configuration shown generally in FIG. **5**, without the bowstring present via the system of springs **22**S and **23**S within the trigger assembly. A user also can move the safety from the safety off mode back to the safety on mode before cocking the archery bow again. Further, if the same sled **30** and crank **50** are used, a user can reset the stops from the de-cocking mode to the neutral mode by rotating the respective stop blocks and flanges from the configuration shown in FIG. **14** to the configuration shown in FIG. **13**.

**[0122]** As mentioned above, the current embodiment of the crossbow optionally can include a crossbow crank **50**. As shown in FIGS. **2** and **17-22**, the crossbow crank **50** will now be described in further detail. The crossbow crank can be used in lieu of a manual rope joined with the sled **30** to draw or cock the bowstring **11** to the drawn mode and/or to undraw or de-cock the bowstring **11** to the released or undrawn mode. The crank **50** can work in concert with the sled **30** as described above or can be used in connection with another type of sled that is not particularly configured with a de-cocking system like the illustrated sled **30**. As shown in FIG. **17**, the crank can be temporarily mounted to the stock **18** of the crossbow **10** via a protrusion **18**P that fits within the hole **18**H defined by the stock. Of course, the crank **50** can be connected to the frame **12** or some other portion of the crossbow **10** in some other manner. Further, the protrusion and hole can be reversed on the stock **18** and crank **50**, respectively.

**[0123]** Optionally, the crossbow crank can include a housing **51** comprised of multiple parts that conceal and protect other internal parts. The housing **51** can include a first section **51**A and a second section **51**B that are joined to one another via one or more fasteners. These fasteners **51**F can be removed and replaced to disconnect their respective housing parts **51**A and **51**B to access the internal components of the housing. The housing also can include one or more covers **51**C to cover the portions of respective spools as described below to gain access to the cord portions C**1** and C**2** that are wrapped on those spools or wrapped off those spools during a cocking and/or de-cocking operation with the crank **50**. The crank can include a crank arm **50**RM which can include a handle **50**RH that can be rotatably joined with the arm **50**RM. The crank can include an aperture **58** to which a portion of a drive nut **52** is joined. The drive nut can include one or more splines that interface with splines of the aperture **50**A. The crank arm **50**RM can be joined with the drive nut **52** via a pin **52**P that fits within an aperture **52**A to prevent the crank arm **50**RM from sliding off the drive nut **52**. Of course, other features can be included on the arm and the drive nut to secure these two elements together. The drive nut **52** can include internal threads **52**T which again threadably engage threads **53**T of the drive shaft **53**, which is further connected to a drive gear **54** as shown in FIGS. **19** and **20**. Optionally, a portion of the drive nut **52** in particular the collar **52**C and the engagement surface **52**E can be disposed inside the housing **51**.

**[0124]** As shown in FIGS. **19-22** the crossbow crank can include a drive shaft **53** that is joined with a drive gear **54**. The drive shaft **53** can be threadably joined with the drive nut **52**. As mentioned above, the drive nut **52** can be joined with the crank arm **50** RM so that a user can rotate the drive nut **52** which engages the drive shaft **53** which again is connected to the drive gear **54**.

**[0125]** Optionally, the drive shaft **53** can be an elongated round or cylindrical bar with a first end that includes threads **53**T and a second end **53**E that extends past the drive gear **54**. The drive gear can be fixedly and non-rotatably joined with a drive shaft so that the drive gear and drive shaft rotate in unison. These components can be a single integral piece or can be connected via interfitting parts that prevent rotation. The drive shaft **53** can be mounted inside a drive shaft bearing **53**B at the end **53**E to promote rotation within the housing. The drive gear **54** can include a plurality of teeth **54**T that mesh with corresponding teeth **55**T of a secondary gear **55**. The secondary gear **55** can be fixedly and rotatably mounted relative to a secondary shaft **56**. The secondary shaft **56** can be mounted within the housing and can be disposed within bearings **55**B on opposing sides of the secondary gear **55** to facilitate rotation of the secondary gear and secondary shaft **56** within the housing. These bearings **55**B can be mounted in corresponding bearing holes or mounting holes in the housing **50**.

**[0126]** The secondary shaft can further be joined with first **56**A and second **56**B spools, reels, or pulleys. These spools can be mounted to the shaft **56** at opposing ends, on opposite sides of the secondary gear **55** via fasteners **56**F. The spools each optionally can include respective apertures **56**AH and **56**BH that are of a corresponding non-circular shape as the secondary shaft **56**. Thus, when the spools are mounted on the shaft, the shaft is inserted in the respective apertures **56**AH and **56**BH such that the spools do not rotate relative to that shaft **56**. As shown, each of the spools can be fixedly

and non-rotatably mounted to the secondary shaft. The spools thus rotate with the secondary drive gear **55**. The spools each can be configured to accommodate the cord that extends to the sled. For example, as shown in FIG. **19**, the first spool **56**A can accommodate the first cord portion C**1** and the second spool **56**B can accommodate the second cord portion C**2**. These cord portions of the cord can wrap onto and off from the spools depending on rotation of the secondary shaft that is motivated by the respective rotation of the secondary gear **55** and the primary or drive gear **54**.

**[0127]** Optionally, the secondary gear **55** can be rotatable in response to rotation of the drive gear **54**. As shown in FIG. **19**, when the drive gear **54** rotates in direction D**1**, the secondary gear **55** and associated spools rotate in the third direction D**3**. As another example, when the drive gear **54** rotates counterclockwise, the secondary gear **55** rotates clockwise, as do the spools. In turn, the cord portions C**1** and C**2** wind onto the respective spools to pull on the cord and facilitate movement of the sled toward the crank. When the drive gear **54** rotates in a second direction D**2**, the secondary gear **55** rotates in a fourth direction D**4** along with the spools **56**A and **56**B which in turn unwind the cord portions C**1** and C**2** therefrom to release the cord and facilitate movement of the sled away from the crank. As further shown in FIG. **19**, the respective gears **54** and **55** can be mounted on the drive shaft **53** and the secondary shaft **56** which can be parallel to one another. The spools can be fixedly and non-rotatably joined with the secondary shaft **56**. As illustrated, the drive gear optionally can be the only gear on the drive shaft, with no other gears or gear elements mounted to the drive shaft. Likewise, the secondary gear can be the only or single gear on the secondary shaft **56**. Of course, in other applications, there may be additional drive gears and/or secondary gears mounted to the respective shafts. Moreover, if desired, there can be additional secondary shafts and/or additional drive shafts mounted in the crank housing to provide additional mechanical advantage in some applications.

**[0128]** Optionally, a biasing element **55**B can be mounted in the housing and to the secondary shaft **56**. This biasing element can be in the form of a spring and optionally can be a flat plate coil spring that is configured to urge the secondary gear **55** in a second direction D**4**, for example, shown in FIG. **19** which in turn can assist in rotating the drive gear **54** and thus the drive shaft in direction D**2** to tighten the threads **53**T of the drive shaft **53** relative to the drive nut **52** and tighten the drive nut **52** relative to the sleeve and the brake **59** along the drive shaft **53** thereby actuating the brake **59** as described below.

**[0129]** As shown in FIGS. **19-22**, the crank **50** can include a one-way bearing **57** defining an opening **57**O within which a sleeve **58** is disposed. The sleeve can be joined with a brake **59** that is disposed along the drive shaft **53**. Optionally, the one-way bearing **57**, sleeve **58** and brake **59** can be located between the drive nut **52** and the drive gear **54** along the shaft **53**. Each of these components will now be described in further detail. The one-way **57** bearing can be any one-way device that allows rotation of the drive shaft **53** and thus the drive gear **54** in a single direction, for example, a first direction D**1**, but impairs rotation of the drive shaft **53** and thus the drive gear **54** in a second direction, for example D**2**. Of course, the directions D**1** and D**2** can be reversed depending on the configuration of the respective shafts, gears, and spools. Optionally, rotation of the shaft in the first direction D**1** can translate to the portions of the cord C**1** and C**2** being drawn onto the respective spools **56**A and **56**B, thus pulling on the sled **30** and drawing and/or de-cocking the bowstring **11** and the crossbow **10** in general. This one-way bearing **57** can be disposed in the housing **50** and for example, press fit or frictionally fit into a bore **57**B of the housing **51**A. Alternatively, the one-way bearing can be adhered to, glued, cemented, or secured in a fixed, non-rotational manner relative to the housing along its exterior **57**E. Of course, fasteners welds or other constructions can be used to fix the bearing to the housing or some other structure. In this configuration, the exterior **57**E of the bearing **57** is fixed and non-rotational relative to the bore **57**B and the housing **51**A. However, the rollers **57**R that extend within the opening **57**O of the bearing **57** can allow relative rotation of the sleeve **58** disposed in the opening relative to those rollers selectively in the first direction D**1**, but not in the second direction D**2**. Of course, in other applications, the rollers can be reversed and can allow rotation in the second direction D**2** but not the first direction D**1**.

**[0130]** As used herein, a one-way bearing can comprise a one-way bearing, a one-way clutch, a roller clutch, a sprag clutch, a backstopping clutch, or similar one-way devices. Generally, however, the one-way bearing is not in the form of and does not include a one-way ratcheting mechanism having a pawl that intermittently interfaces with teeth and a gear. The one-way bearing herein is smoother, more quiet, and less noticeable in actuation than such a ratcheting mechanism and can be well suited for hunting environments. One commercial example of a one-way bearing is the one-way bearing under the name of TRITAN Needle Roller Bearing, available from Grainger of Lake Forest, Illinois. Another commercial example of a one-way bearing is a one-way clutch roller bearing under the name of the HF Series, available from MiSUMi of Schaumburg, Illinois. Yet another commercial example of a one-way bearing is a sprag clutch available from GMN Bearing USA of Katy, Texas.

**[0131]** With further reference to FIGS. **19** and **20**, the one-way bearing is arranged along the drive shaft **53** between the brake **59** and the drive nut **52**. The drive shaft **53** can extend through the opening **57**O of the one-way bearing **57**. The sleeve **58** can be interposed between the shaft **53** and the rollers **57**R. As shown, the sleeve **57** can be a generally cylindrical and/or tubular element that includes an opening or bore **580** through which the shaft is disposed. The shaft **53**, when simply fit through the sleeve **58**, can rotate relative to the sleeve and the sleeve relative to the shaft, in conditions where the brake **59** is not axially compressed as described below. The sleeve **58** can include a brake collar **58**C at one end and an engagement surface **58**E at the other end. The engagement surface **58**E can be directly adjacent a drive nut spacer **52**S that fits within the opening **57**O or slightly outside of it and the one-way bearing **57**. The drive nut spacer does not optionally contact any of the rollers **57**R or the one-way bearing **57** in general. It can, however, selectively be frictionally engaged against the engagement surface **58**E of the sleeve **58** as described below when compressed thereagainst by the drive nut **52** tightening on the threads **53**T of the drive shaft **53**. The drive nut spacer **52**S can be constructed from a softer material, such as brass, a composite, and/or a polymeric material. Optionally it can bite into and provide good engagement and contact between the drive nut **52** and the sleeve **58**.

**[0132]** As further shown in FIGS. **19** and **20**, the sleeve can include and/or be joined with the brake collar **58**C, which can be referred to as a first brake collar. The brake **59** can comprise this first brake collar **58**C, as well as a second brake collar **59**C and a brake disc **59**D. These components, that is the first brake collar **58**C, second brake collar **59**C and brake disc **59**D can be disposed along the shaft **53**, optionally between the drive gear **54** and the one-way bearing **57** and/or drive nut **52**. The brake disc itself **59**D can be disposed between the first brake collar **59**C and the second brake collar **58**C. The brake disc **59**D can include an opening **590** through which the shaft **53** is disposed and can rotate relative thereto. The second brake collar **59**C also can define an opening through which the drive shaft **53** can be disposed and can rotate relative thereto. Optionally, each of the openings of the sleeve, the brake collars and the disc are all of a diameter that is larger than the diameter of the drive shaft **53** such that all of the sleeve **58** and brake **59** components can rotate freely relative to the drive shaft **53**, when the brake **59** is not actuated as described below. Further optionally, the second brake collar **59**C can define a contoured portion of the opening having one or more the first lands **59**K. This contour opening and the first lands **59**K can mate with one or more corresponding second lands **53**K that are fixed and stationary relative to the drive gear **54** and/or the shaft **53**. Accordingly, the first and second lands **53**K and **59**K can contact and/or mate with one another to prevent rotation of the second brake collar **59**C relative to the drive shaft and/or the drive gear **54**. However, these components can be disassociated from one another so that the second brake collar **59**C can be removed from the drive shaft, along with the disc and the sleeve and other components.

**[0133]** The crossbow crank **50** can be constructed to include the one-way bearing and the brake as described above to provide certain functionality. For example, the crank **50** can be manually operated by user by rotating the crank arm **50**RM in a first direction, for example D**1**. As this occurs, the shaft **53** and sleeve **58** automatically lock to one another to rotate the drive shaft in the first direction D**1**, with the sleeve and drive shaft rotating in unison, optionally with the drive gear **54** which in turn rotates the secondary gear **55** spooling on the portions of the cord C**1** and C**2** to the respective spools **56**A and **56**B. This in turn pulls the sled **30** along the barrel or frame **12** to move the bowstring during a drawing and/or de-cocking operation of the crossbow **10**. However, the sleeve and drive shaft can automatically unlock from one another upon manual actuation of the crank arm **50**RM in a second, opposing direction D**2**. As a result, the drive shaft **53** can rotate freely relative to the sleeve **58** and unencumbered by the one-way bearing **57**. The associated drive gear **54** can rotate the secondary gear **55** and the respective spools **56**A and **56**B in a fourth direction D**4** so as to allow the cord portions C**1** and C**2** to unwind from those spools. As a result, a sled connected to the spools via the cord can be controllably pulled by the tension in the bowstring **11**, pulling down the sled to de-cock the bowstring or move the bowstring from the drawn mode to a released or undrawn mode. The aforementioned locking and unlocking can be at least partially affected via the interaction of the brake **59** with the drive shaft **53** and drive gear **54** as described below.

**[0134]** As mentioned above, the brake can be disposed along the drive shaft **53**, optionally distal from the one-way bearing **57**. The brake can be axially compressible along the drive shaft **53** to fixedly join the drive shaft with the sleeve **58** that is disposed in the opening of the one-way bearing when the drive shaft is rotated in the first direction D**1**, for example, upon manual input by user on the arm **50**RM. Upon this axial compression, the one-way bearing **57** allows rotation of the sleeve **58** in that direction D**1**. The rollers **57** optionally can rotate relative to the exterior surface **58**E of the sleeve **58** as the sleeve rotates in unison with the drive shaft **53**. This axial compression of the brake along the drive shaft can fix the drive shaft to the sleeve in a non-rotatable manner. The axial compression also temporarily fixes the sleeve, brake, shaft, and drive gear as a single unitary rotating structure.

**[0135]** Optionally, when manual user input is discontinued to the arm **50**RM of the crank **150**, the tension in the cord, for example, the cord portion C**1** will urge the secondary gear **55** to rotate in the fourth direction D**4** which in turn will urge or attempt to rotate the drive gear **54** and the shaft **53** in the second direction D**2**. However, because the drive shaft **53** and drive gear **54** are fixed non-rotatably to the sleeve **58**, when that sleeve attempts to rotate initially against the rollers **57**R in the second direction D**2**, due to the brake automatically locking and all the components rotating as a single unit, the one-way bearing **57** will engage the sleeve to impair the drive shaft, sleeve, drive gear, secondary gear and spools from rotating in a manner that allows the cord portions C**1** and C**2** to unravel or unwind from the respective spools **56**A and **56**B. As a result, the sled **30**, even though being pulled under the forces of a partially or fully drawn bowstring **11**, will not be moved or pulled toward the riser **16** of the bow. Further, due to the arresting of rotation in the second direction D**2** of the shaft **53**, the crank arm **50**RM likewise will not begin to spin uncontrollably in the direction D**2** with the shaft **53** upon cessation of the manual actuation of the crank.

**[0136]** In most cases, any tension T in the cord and its cord portions C**1** and C**2** caused by the bow string pulling on the sled counteracts rotation of the drive shaft **53**, drive gear **54** and crank arm **50**RM in the first direction D**1**, and urges the drive shaft or generally produces a force attempting to rotate the drive shaft in the second direction D**2**, however, the drive shaft and drive gear are prevented from rotating in the second direction via the one-way bearing **57** interacting with the sleeve **58** which is again locked to the shaft in a fixed and non-rotational manner relative via the brake **59**.

**[0137]** The automatic activation and deactivation of the brake **59** and thus the automatic locking and unlocking of the sleeve **58**, drive shaft **53**, and drive gear **54** relative to one another can be provided via rotation of the drive nut **52** with the crank arm **50**RM. For example, as shown in FIG. **21**, when the crank arm **50**RM is rotated in direction D**1**, this likewise rotates the drive nut **52** in that same direction D**1**. As a result, the threads **52**T of the drive nut tighten relative to the threads **53**T of the drive shaft **53**. The distance between the drive nut **52** and the drive gear **54** is reduced or decreased. This in turn causes the drive nut engagement face **52**E to press against the drive nut spacer **52** which in turn pushes farther against the engagement face **58**E of the sleeve **58**. This compression continues axially, parallel to the drive shaft longitudinal axis DLA and along the drive shaft **53**. As a result, the various components along the drive shaft **53** begin to and continue to axially compress under an axial compression force AC. This in turn causes the brake collar **58**C to compress against the brake disc **59**D which com-

presses against the other brake collar **59**C which in turn compresses against the drive gear **54** or lands of the drive shaft **53**. With all of these components axially compressed, the brake **59** effectively rotationally locks the sleeve **58** relative to the drive shaft **53** and drive gear **54**. Thus, all of these components rotate in unison as a single unit, that is, the drive nut **52**, sleeve **58**, brake **59**, drive shaft **53** and drive gear **54** all rotate in unison about the drive shaft longitudinal axis DLA. These components can rotate in unison in the first direction D**1**, however, when rotation ceases in direction D**1**, and the tension in the one or more cord parts C**1** and C**2** urge rotation of the drive gear **54** and thus the drive shaft **53** in direction D**2**, this rotation in direction D**2** is impaired via the one-way bearing **57** interacting with the sleeve which again is axially compressed with the brake and rotationally fixed to the drive shaft due to the brake **59**. Accordingly, the drive shaft **53** is impaired from rotation in that second direction D**2**. This impairment of rotation in the second, opposite direction D**2** can be achieved without any further manual input by the user on the crank arm and/or the winch in general. Again, this is because the brake is activated automatically to ensure that the drive shaft and sleeve that extends within the opening of the one-way bearing **57** are all locked rotationally to one another.

**[0138]** As briefly described above, it will be appreciated that upon manual rotation of the crank arm **50**RM in direction D**1**, the drive shaft **53** rotates in direction D**1** along with the drive gear **54**, which turns the secondary gear in direction D**3** which in turn rotates the respective spools **56**A and **56**B to pull the cord, and in particular the portions of the cord C**1** and C**2** in the winding direction W and thereby wind those cord portions C**1** and C**2** on the respective spools. This cord winding translates to movement of the sled to which the cord is attached to draw or cock the bowstring of the crossbow **10**. Optionally, as the user rotates the drive shaft **53** in the first direction D**1**, that shaft **53** is fixedly joined with a gear **54** in a housing, with the gear **54** being rotatably coupled to the spools **56**A, **56**B so that the spools wind the cord portions C**1** and C**2** thereon. The rotation axially compresses the brake **59** along the shaft **53** during and as a result of the rotating in the first direction D**1** to fixedly join the shaft **53** with the sleeve **58** disposed around the shaft **53** so that the shaft **53**, gear **54** and sleeve **58** rotate in unison. As mentioned, the sleeve can be disposed in the one-way bearing **57** that is joined with the housing **51** so that when the rotating in the first direction D**1** ceases, the shaft and gear are impaired from rotating in a second direction D**2** opposite the first direction D**1** via the one-way **57** bearing interacting with the sleeve **58**.

**[0139]** The crank **50** can be used to draw the bowstring of the crossbow **10**. For example, as shown in the configuration shown in FIG. **21**, where the sleeve **58** and drive shaft **53** are automatically locked to one another via the brake **59**, the user can rotate the crank arm **50**RM to pull on the cord portions C**1** and C**2** in the winding direction W as shown. The user can do this to pull the sled **30** and draw the bowstring **11** as shown, for example, in FIG. **2**. In this configuration, the sled can be set up so that the stops **38** and **39** are in the neutral mode to allow full draw of the bowstring past the catch **23** as shown in FIG. **4**, optionally with the safety **24** in the safety on mode.

**[0140]** After the bowstring **11** is captured by the catch **23**, for example, as shown in FIG. **5**, the sled **30** can be removed. This removal can be facilitated by slack being established in the cord and its cord portions C**1** and C**2**. To provide this slack, a user, as shown in FIG. **22** can rotate the crank arm **50**RM in direction D**2**. This rotation in direction D**2** unthreads the threads **52**T of the drive nut **52** from the threads **53**T of the drive shaft **53**. As a result, the drive shaft becomes disengaged from the sleeve and can rotate freely with the drive nut and crank arm **50**RM as the user holds the crank arm **50**RM. As this occurs, the drive gear **54** can rotate in direction D**2** as well which in turn causes the secondary gear **55** to rotate in direction D**4** causing the spools **56**A and **56**B to likewise rotate in direction D**4**. This rotation and direction D**4** allow the cord portions C**1** and C**2** to unwind in direction UW from the spools. The user can pull the sled **30** as shown in FIG. **2** forwardly in direction J to disengage the sled from the bowstring and remove it from the rail **13**. The user subsequently can remove the crank **50** from the crossbow along with the cord portions C**1** and C**2**, and the sled **30**, to ready the crossbow for loading an arrow and shooting.

**[0141]** As mentioned above, the rotation of the crank in direction D**2** as shown in FIG. **22** facilitates disengagement of the drive shaft **53** from the sleeve **57**. This can occur when the drive nut **52** threads or loosens relative to the drive shaft **53**. When this occurs, the drive nut **52** moves away from the drive nut spacer **52**S and the sleeve engagement surface **58**E. The drive nut engagement surface **52**E thus becomes spaced by a gap SG from the spacer **52**S. Optionally, the spacer **52**S also becomes slightly spaced from the engagement surface **57**E of the sleeve. When the drive nut no longer engages the spacer **52**S, the axial compression AC, shown in FIG. **21**, is decreased and/or eliminated. Thus, the brake **59** and its components, that is, the collars **58**C and **59**C as well as the disc **59**D no longer are frictionally engaged with one another and small gaps BG can be established between one or more of these components. In this manner, the brake no longer locks the sleeve **58** to the drive shaft **53**. Thus, these components can rotate freely relative to one another and more particularly, the drive shaft **53** and drive gear **54** can rotate and freely spin relative to the sleeve and the one-way bearing **57**. Thus, the one-way bearing can no longer impair or act on the drive shaft **53** rotating in the second direction D**2**. As a result, the drive shaft **53** can freely rotate in the second direction D**2** again without being prevented impaired or stopped from rotating via the one-way bearing **58**.

**[0142]** Optionally, the disengagement of the drive nut **52** relative to the sleeve can occur automatically upon rotation of the crank arm **50**RM in direction D**2**. No other input to any other components of the crossbow winch **50** are required to rotate the drive shaft **53** in direction D**2** to let out or unwind the cord portions C**1** and C**2** in direction UW. Further optionally, the engagement of the drive nut relative to the sleeve can occur automatically upon rotation of the crank arm **50**RM in direction D**1**, as shown in FIG. **21**. No other input to any other components of the crossbow crank **50** are required to rotate the drive shaft **53** in direction D**1** to wind or hold cord portions C**1** and C**2** in direction W.

**[0143]** The crossbow crank **10** can be used to de-cock the crossbow **10**. For example, as shown in the configuration shown in FIG. **21**, where the sleeve **58** and drive shaft **53** are automatically locked to one another via the brake **59**, the user can rotate the crank arm **50**RM to pull on the cord and its cord portions C**1** and C**2** in the winding direction W as shown. The user can do this to pull the sled **30** during a de-cocking operation, for example, as shown in FIGS. **6-12**.

In this configuration, the sled can be set up so that the stops **38** and **39** are in the de-cocking mode so that the bowstring **11** is not compressed against the safety **24** and so the safety can be actuated from the safety on mode shown in FIG. **7** to the safety off mode to actuate the trigger assembly as shown in FIGS. **10** and **12**, thereby allowing the catch **23** to move to the drop mode, thereby allowing the bowstring **11** to move forward to the released or undrawn mode in a de-cocking operation.

**[0144]** When the catch is released to the drop mode and before that operation, the sled **30** can be urged forward by the bowstring. Tension T can be established in the cord portions C**1** and C**2**, and this tension can be increased or greater after the catch **23** is moved to its drop mode. The sled can be held in place, for example, as shown in FIG. **10** via the cord portions that are around the spools in the crank. Due to the tension T in the cord portions, the drive shaft **53** can remain engaged with the sleeve **58** which can remain engaged with the one-way bearing **57**. Accordingly, the drive shaft **53** can be prevented from rotating in the second direction D**2**, and thus the cord portions C**1** and C**2** can be prevented from unwinding from the respective spools **56**A and **56**B.

**[0145]** It will be noted, however, that as a tension T is applied via the cord portions C**1** and C**2** in a manner to unwind the cord portions in a direction UW, as shown in FIG. **22**, this can automatically urge the secondary gear **55** to rotate in direction D**4** slightly which will cause the drive gear **54** to also rotate in second direction D**2** opposite the first direction D**1**. When this occurs, the drive shaft **53** will rotate in direction D**2** slightly and thus drive shaft threads **53**T thread into the threads **52**T of the drive nut **52**. Because the drive nut **52** is resting or positioned through the crank housing **51**, and the arm **50**RM provides some inertia, the drive nut **52** will not rotate. Thus, the drive shaft **53** will tighten relative to the drive nut **52** thereby axially compressing the components with the axial compression force AC via the brake **59** along the drive shaft **53** as shown in FIG. **21**. As a result, the drive shaft **53** becomes non-rotatable relative to the sleeve **58**. Because the sleeve **58** is disposed in the one-way bearing that prevents rotation in the direction D**2**, any further rotation of the drive shaft **53** in direction D**2** is impaired and/or prevented. Further, the drive shaft, drive gear and spools are impaired from rotation so that the cord portions C**1** and C**2** will not unwind any direction UW off from the spools. In turn, this will prevent the bowstring **11** from uncontrollably pulling the sled **30** as it moves from the drawn mode to the released or undrawn mode.

**[0146]** Returning to FIGS. **22** and **12**, after a user actuates the safety **24** and the catch **23** releases the bowstring, a user can manually actuate the arm **50**RM and rotate it in direction D**2**. As a result, the drive nut **52** loosens relative to the drive shaft **53** and the threads **53**T unthread from the threads **52**T. Accordingly, one or more gaps SG, BG can be established between various components along the shaft, such as between the drive nut spacer **52**S, the sleeve **58** and the brake **59** components. This in turn allows the drive shaft **53** and drive gear **54** to rotate unimpaired by the one-way bearing **57** in direction D**2**. As this occurs, the drive gear **54**, also rotating in direction D**2** rotates the secondary gear **55** and spools in direction D**4**. As a result, the cord portions C**1** and C**2** unwind and direction UW from the spools **56**A and **56**B while the user continues to rotate the arm **50**RM manually in direction D**2**. This disengagement of the brake unlocks the sleeve **58** from the drive shaft **53** automatically and again allows the drive shaft **53** to rotate freely in either the first direction D**1** or the second direction D**2** without any constraint on rotation of the shaft via the one-way bearing **57**. The user can continue to rotate the arm **50**RM in direction D**2**, with the bowstring pulling on the sled **30** until the bowstring achieves the released mode. After that point, the user can remove the sled from the bowstring and the crank from the stock until the next cocking operation of the ball crossbow is warranted.

**[0147]** During the de-cocking operation, while the bowstring is let down via the sled **30** connected to the crank **50** via the cord C**1** and C**2**, sometimes a user may cease rotating the shaft **53** in the second direction D**2** via manual input through the crank arm **50**RM. When this occurs, the crank prevents the crank arm **50**RM from continuing to rotate uncontrollably in direction D**2**. In particular, the tension T in the cord portions C**1** and C**2** automatically urges the shaft **53** to rotate in the second direction D**2** while the arm **50**RM and drive nut **52** remain stationary. As a result, the threads **53**T thread into the threads of the drive nut **52**T to axially compress all the components between the drive nut **52** and the drive gear **54** along the drive shaft **53**. This in turn causes axial compression of the brake **59** along the shaft such that the shaft and gear are again impaired from rotating in the second direction D**2** via the one-way bearing interacting with the sleeve which is locked rotationally to the drive shaft.

**[0148]** A first alternative embodiment of the crossbow and a crossbow crank is shown in FIGS. **23-31** and generally designated **110** and **150**, respectively. The crossbow and crossbow crank can be substantially similar or identical to the crossbow **10** and crank **150** in the embodiment above in structure, function, and operation, with several exceptions. For example, the crossbow **110** can include a riser **116** joined with a crossbow frame **112** and a stock or butt **118** extending rearward from the frame **112**. A first limb **114**A and second limb **114**B can be joined with the riser **116** with a bowstring **111** extending between cams **115**A and **115**B rotatably mounted on the respective limbs. A pistol grip **117** can be joined with the crossbow frame **112**. All of these components can be identical or similar to like or similar components described in the embodiment of the crossbow **10** above.

**[0149]** In this embodiment, however, the crank **150** can be constructed to fit at least partially and/or removably inside the crossbow frame **112**, rather than attached rearward of the stock **118**. The crank and its components can form a crank module **150**M which can be selectively mountable relative to the crossbow frame **112** on either the right side R or the left side L of the crossbow frame and/or longitudinal access LA as shown in FIGS. **27** and **31**. With this removeable, replaceable and reorientable crank **150**, the crossbow **110** can provide a user with the ability to reconfigure the crossbow crank **150** to a preferred side of the crossbow frame. Accordingly, the user can operate the crossbow crank **150** with the crank arm **150** RM to convert the crossbow to a drawn mode and/or to let down the crossbow and bowstring to an undrawn mode from the right side or the left side of the crossbow frame, whichever is more convenient or easy for the user.

**[0150]** In this embodiment, components other than the crank **150** optionally can be slightly different. For example, the crossbow **110** can include the limbs **114**A and **114**B with

the associated cams **115**A and **115**B. These limbs can be reverse draw limbs as shown, so that the cams extend forwardly of the crossbow frame and rail. The bowstring **111** in the undrawn state can extend between the cams generally forward of their axes.

**[0151]** In this embodiment, the crossbow **110** optionally can include redirection pulleys **115**C and **115**D. These pulleys can redirect the bowstring **111** when it is drawn to a narrow configuration inside or below a barrel shroud **119** that is generally disposed above a rail or barrel **113** or the crossbow frame **112**. The rail **113** can be similar to the rail above, and the location where an arrow is mounted or is disposed when the crossbow is drawn. Optionally, the crossbow can include a scope or rail mount **119**M that can be fastened to or can be integral with the shroud **119** and/or the crossbow frame **112**.

**[0152]** Further optionally, in this embodiment the crossbow **110**, unlike the embodiment of the crossbow **10** above, can include a moving receiver **120** that is disposed at least partially within and/or adjacent the crossbow frame **112**. The moving receiver **120** shown in FIG. **28** can be similar or identical to the receiver disclosed in pending U.S. application Ser. No. 18/756,477, entitled, Crossbow Bolt Retention Plunger, filed Jun. 27, 2024, which is hereby incorporated by reference in its entirety. For example, the receiver **120** can be movable along the frame **112** from a first position, generally adjacent and aligned with the cams **115**A and **115**B in an undrawn mode, to a second position, where the receiver **120** is distal from the cams and the limbs in the drawn mode shown in FIG. **28**. There, the receiver is disposed in the second position, generally in the drawn mode in which it has drawn the bowstring to the drawn configuration. The receiver **120** can be moved from the undrawn mode to the drawn mode, that is, from the first position to the second position, by the crank **150** that is disposed within the internal compartment **112**C defined by the crossbow frame or another component.

**[0153]** As shown in FIG. **28**, the crank **150** and a particular a portion of the crank module **150**M as described below can extend within or inside the crossbow frame **112**. The frame itself can form an internal void, cavity, interior or compartment **112**C that extends toward the butt **118** of the crossbow **110**. Within the compartment **112**C, the receiver **120** can be connected to a cord C**10**, which can be any cord C**1**, C**2** of the types described in the embodiments above. In this embodiment, the cord C**10** optionally can be more in the form of a web, strap, or ribbon. The cord C**10** can be disposed between one or more rollers **112**R and can be connected to the receiver **120** via one or more retaining rods or pins **120**R. The cord C**10** can extend to and can furl, wind, or wrap upon the spool **156**S. The spool **156**S can be rotatably mounted in the crossbow frame **112** and in particular inside the compartment **112**C, rearward of the receiver **120** and generally between the receiver **120** and the butt **118** of the crossbow **110**. The spool **156**S can be configured to wind the cord C**10** onto it, or off from it depending on the operation of the crank **150**. The spool can be mounted to a secondary shaft **156**, which itself can be mounted on bearings or other rotatable elements that can rotate within the crossbow frame **112**. The secondary shaft **156** can extend to and be joined with respective sides **112**A and **112**B of the crossbow frame **112** so that the shaft remains generally stationary, but still rotates. The secondary shaft **156** and the spool **156**S can be configured similar or identical to the respective secondary shaft **56** and spools **56**A, **56**B as described in the embodiment above.

**[0154]** Optionally, the shaft **156** can be offset from the first driveshaft **153** of the crank and its crank module **150**M, similar to the shaft **56** being offset from the driveshaft **53** of the crank **50** described in the embodiment above. The secondary shaft **156** can also be parallel to the first or primary driveshaft **153**. In this embodiment, however, the crank module **150**M, crank **150** and driveshaft **153** can be disposed forward of the spool **156**S and the second driveshaft **156**. The first driveshaft **153** can also be disposed at least partially below the secondary shaft **156**.

**[0155]** As shown in FIGS. **26** and **29**, the spool **156**S can be mounted to the secondary shaft **156** which can extend through a portion of a second surface **112**B of the crossbow frame **112**. The second surface **112**A can be opposite a first surface **112**A of the crossbow frame **112** and separated therefrom by the compartment **112**C in the crossbow frame **112**. The secondary shaft **156** can be fastened with one or more fasteners **156**F to the second surface **112**B. On an opposite side of the secondary shaft **156** another fastener similar to fastener **156**F can secure the secondary shaft to the first surface **112**A of the crossbow frame. Optionally, the first surface **112**A can be on the right side R of the crossbow frame **112** when the crossbow is held by a user, and the second side surface **112**B can be disposed on the left side L of the crossbow frame **112**. Put another way, the first surface **112**A can be on the right side R of the longitudinal axis LA of the crossbow frame and the second surface **112**B can be on the left side L of the longitudinal axis LA. Also disposed on the secondary shaft **156** can be a first secondary gear **156**A and a second secondary gear **156**B. These first and second secondary gears can be disposed on opposite sides of the spool **156**S and the cord C**10** when wound on the spool **156**S. The gears can be identically sized and can have the same number of teeth **155**T. The first secondary gear **154**A and second secondary gear **154**B can be completely installed and disposed inside the internal compartment **112**C of the crossbow frame **112**, versus outside the frame or stock, like the embodiment above. The gears can be rotatably mounted on the secondary shaft **156** and can rotate in the same location about that shaft, without ever being removed from the crossbow frame and the compartment **112**C.

**[0156]** The gears can be disposed on the respective right and left sides of the longitudinal axis LA. For example, the first secondary gear **154**A can be on the right side R and the second secondary gear **154**B can be disposed on the left side L of the longitudinal axis LA and/or of the crossbow frame. The spool **156**S and the cord C**10** can be split amongst the left side and the right side, generally parallel to the longitudinal axis LA. The first secondary gear and second secondary gear can be rotatable but fixed and stationary within the compartment **112**C and the crossbow frame **112**, rotating about or with the shaft **156** optionally in a single fixed location. One or more bearings **156**B can be disposed between the gears and the shaft **156** promote rotation. Further optionally, the spool **156**S and/or secondary shaft **156** can be associated with a biasing element **155**B in the form of a spring similar or identical to the biasing element **55**B described in the embodiment above and shown in FIG. **19**.

**[0157]** The respective first secondary gear **156**A and second secondary gear **156**B respectively can mesh with and rotationally engage the first drive gear **154**A and the second

drive gear **154**B disposed on the first drive shaft **153**, when the crank module **150**M is mounted in the configuration shown in FIG. **29**, which is set up for a right side mounting relative to the crossbow frame **112**. As described below, when the crank module **150**M is removed from the crossbow frame as shown in FIG. **26** in direction RC, the first drive gear **154**A and its teeth and the second drive gear **154**B and its teeth are respectively removed or disengaged from the first secondary gear **156**A and its teeth, and the second secondary gear **156**B and its teeth.

**[0158]** Optionally, when the module **150**M is swapped from the right side R to the left side L of the longitudinal axis and/or the crossbow frame as shown in FIG. **27**, for example, in direction RR**1** and reinstalled relative to the crossbow frame **112** on the opposite side, the interaction between the drive gears and the secondary gears changes. As a further example, upon reinstallation of the module **150**M relative to the crossbow frame **112** as shown in FIG. **31**, where the crank module **150**M is mounted so that the crank arm **150**RM can be engaged on the left side L of the longitudinal axis LA and the left side **112**A of the crossbow frame **112**, the first drive gear **154**A can mesh with and engage the second secondary gear **156**B, and the second drive gear **154**B can mesh with and engage the first secondary gear **156**A. Optionally, upon swapping of the drive module from a right handed to a left handed configuration or vice versa can result in the changing of engagement of the first and second drive gears relative to the first and second secondary gears. Regardless of this change from the left side to the right side, however, the crank module **150**M and its respective drive gears **154**A and **154**B can engage the secondary gears **156**A and **156**B and thereby rotate the spool **156**S and move the cord C**10** in a manner similar to or identical to that of the crank **50** engaging the respective secondary gears **56** as described in the embodiment of the crossbow **10** above. For this reason, the engagement action will not be repeated here.

**[0159]** Optionally, the crossbow **110** can include a crank arm **150**RM. As shown in FIGS. **23**, **26** and **28**, the crank arm **150**RM can include a handle **150**RMH that is rotatably mounted to the arm portion **150**O. The portion **150**O can include an opening **150**PO that receives a mount portion **150**RMM that is fastened into the crossbow frame **112**. As shown in FIG. **28**, the mount portion can be in the form of a nut or spindle shaped similar to the drive nut **152** of the crank module **150**M as described below. The crank arm **150**RM can be stowed such that the elongated arm portion **150**O is parallel to the crossbow frame in a stored position, while the handle **150**RMH extends at a right angle or perpendicular to the portion **150**O. Optionally, the arm **150**RM can include a spring-loaded detent, set screw or other element that can temporarily hold and secure the portion **150**O to the mount portion **150**RMM.

**[0160]** As mentioned above, the receiver **120** can be a moving receiver and can include various components that allow the receiver to retain, hold and release the boring **111**. These components all could be tied to a trigger assembly **122** that is similar to the trigger assembly as noted in the above and in U.S. application Ser. No. 18/756,477, entitled, Crossbow Bolt Retention Plunger, filed Jun. 27, 2024. Suffice it to say that the trigger assembly can operate in a manner similar to the trigger assembly described in the embodiment above so it will not be described again here.

**[0161]** Turning now to FIGS. **25-30**, the crank module **150**M and crank **150** of the embodiment of the crossbow **110** will now be described in further detail. The crank module **150**M can be mountable relative to a transverse crank mounting hole **115** defined through the crossbow frame **112**. This hole **115** can comprise a first aperture **115**A disposed in the first side or first side surface **112**A of the crossbow frame **112** as shown in FIG. **26**. The hole **115** can comprise a second hole or aperture **115**B on the second side or second surface **112**B of the crossbow frame **112** as shown in FIG. **25**. These apertures **115**A and **115**B optionally can be aligned with one another and centered on a driveshaft longitudinal axis DLA, which can correspond to the driveshaft axis of the driveshaft **153** of the crank **150**. This hole **115** can be transverse to the longitudinal axis LA of the crossbow frame. The axis DLA can be perpendicular to the longitudinal axis LA of the frame **112**.

**[0162]** As shown in FIGS. **25** and **26**, the transverse hole **115** can be sized such that the first drive gear **154**A and second drive **154**B can pass through the respective openings **115**A and **115**B, into the internal compartment **112**C. The diameter or dimension of the transverse hole **115** can be larger than the outermost diameter of the drive gears. This is so that the drive gears can clear the openings in the surfaces when the crank module **150**M is installed relative to the crossbow frame. The crossbow frame **112** also can define one or more first fastener holes **116**H adjacent the transverse mounting hole **115** on the first surface **112**A. One or more additional fastener holes **116**B can be disposed around the second opening **115**B of the transverse mounting hole **115** on the second surface **112**B of the crossbow frame **112**. These first and second sets of holes can be aligned with one another and can be threaded to receive respective fasteners **117**A that are associated with a module housing **151**B.

**[0163]** The module housing **151**B likewise can be outfitted to include respective holes **151**F that can receive the respective fasteners **117**A and can facilitate attachment of the module housing **151**B to a respective first or second surface of the crossbow frame. Optionally, although shown as being side surfaces of the crossbow frame, the respective first and second surfaces herein can be upper and lower surfaces, front and rear surfaces, or other surfaces. Moreover, the transverse mounting hole need not be transverse to the side surfaces as shown. Instead, the mounting hole might extend from an upper surface to a lower surface of the crossbow frame or some other component. Moreover, the transverse mounting hole might be defined in a different component altogether than the crossbow frame.

**[0164]** The crank module **150**M as shown in FIGS. **25-26** and FIG. **30** can include one or more of a one-way bearing **157**, a sleeve **158**, and a brake **159** all of which can be mounted to or adjacent or along a driveshaft **153**. These components, that is, the one-way bearing **157**, the sleeve **158**, the brake **159** and the driveshaft **153** can be similar or identical to the same components the embodiment of the crossbow **10** above in structure, function in operation, and therefore will not be described again in detail here. Suffice it to say that the sleeve is disposed in the one-way bearing, the driveshaft extends through the sleeve and is configured to extend within the transverse crank mounting hole **115**. A crank arm can be joined with the driveshaft similar or identical to the embodiment above. Similar to the embodiment above, the brake **159** can include one or more discs and flanges. The brake **159** can be generally mounted along the

driveshaft **153** and axially compressible along the driveshaft to automatically lock the driveshaft in the sleeve **158** with one another when the driveshaft **153** is rotated in a first direction, which again is mentioned and fully described in the embodiment above, and therefore will not be described again here.

**[0165]** The construction of the crank **150** and the module **150**M can differ from that of the crank **50** described above in several ways. For example, the housing **151**B can be selectively securable and removably mountable to either side or surface of the crossbow frame **112**, with various components of the module projecting into and/or housed within the crossbow frame **112**. As shown in FIG. **30**, the module housing **151**B can include an internal bore **151**BC. This internal bore can be sized to receive the one-way bearing **157**, the sleeve **158** and the brake **159**. Of course, in other constructions, the housing module housing **151**B may only house one or two of these components, for example, the one-way bearing **157**, sleeve **158** and drive nut **152**, while the brake drive gears and the remainder of the driveshaft project into the internal compartment **112**C of the crossbow frame, optionally in the transverse mounting hole **115**.

**[0166]** As shown, the bore **151**BC can include a step **151**S such that the diameter of the bore **151**BC decreases at the step **151**S. The one-way bearing **157**, which can be any of the devices described in the embodiment above and referred to as a one-way bearing, can be placed adjacent the step **151**S. The bore **151**BC can include another segment **151**BC**2** that extends away from the step **151**S, having a smaller diameter. This segment can extend to a flange **151**F that forms an opening **151**H through which portion of the drive nut **152** extends. The drive nut **152** optionally can include a base **152**B that is slightly larger in diameter or dimension than the hole **151**H such that the nut is trapped relative to the module housing **151**B by virtue of the base **152**B interfering with the flange **151**F. Similar to the drive nut mentioned in the above embodiment, the drive nut **152** may include spines or flanges on an exterior surface to engage the manual crank arm **150**RM. The drive nut **152** also can include internal threads **152**T. Those threads can engage the threads **153**T of the driveshaft **153** to operate and function in a manner similar to that of the embodiment of the crossbow **10** described above.

**[0167]** The crank **150** and crank module **150**M can include a spacer **152**S disposed between the drive nut **152** and the sleeve **158**. Again, this spacer **152**S can be similar in structure, function, and operation to that of the spacer **52**S described above when the drive nut **152** is threaded onto and off the threads **153**T of the driveshaft **153**. The crank module **150**M optionally can include a bearing **153**B which can be fixedly and non-rotatably attached to the module housing **151**B. In particular, the bearing outer raceway can be fixed and stationary relative to the module housing **151**B. The inner raceway, however, can be rotatable relative to the outer raceway via the bearings disposed therebetween. This bearing set up can be similar in structure, function, and operation to the bearing **53**B as described in the embodiment above, and therefore will not be described again here.

**[0168]** As shown in FIG. **30**, the driveshaft **153** can extend through the sleeve **158**, the brake **159** and within the opening of the one-way bearing **157**, similar to the driveshaft **53** of the embodiment of the crank **50** described in the embodiment above. In particular, the crank portion **153**B can extend through the module housing **151**B and within the bore **151**BC of that housing. In this instance, the portion of the driveshaft **153**B can extend beyond the first surface **112**A of the crossbow frame. The driveshaft **153** also can extend within the internal compartment **112**C of the crossbow frame **112**. In particular, the portion **153**A can extend within the internal compartment **112**C, generally between the first surface **112** A and the second surface **112** B, within the transverse mounting hole **115**. The portion **153**A of the driveshaft can transition to yet another portion, **153**C that can be of a reduced diameter or dimension. This portion **153**C of the driveshaft can extend beyond the surface **112**B of the crossbow frame **112**.

**[0169]** As will be appreciated, the portion **153**B of the driveshaft **153** also can extend beyond the first surface **112**A of the crossbow frame. The portion **153**C can define threaded bore **153**CB and they can receive a fastener **153**CF. The fastener **153**CF can engage an inner raceway of another bearing **153**BT that is disposed in or joined a mounting plate **150**P that is disposed opposite the module housing **151**B. The fastener **153**CF can engage an inner raceway of the bearing **153**BT and allow the driveshaft **153** to rotate relative to the outer raceway of that same bearing **153**BT. Of course, the bearing can be deleted, or replaced with bushings or other elements that allow the driveshaft and other components to rotate as described in connection with the embodiment above.

**[0170]** As described above, the driveshaft **153** can include, can be integral with and/or can be joined with one or more drive gears. A first drive gear **154**A and a second drive gear **154**B can be joined with a drive shaft. In particular, those drive gears can be formed or joined with the portion **153**A of the driveshaft **153** that is disposed in the internal compartment **112**C, generally between the first surface **112**A and the second surface **112**B. The crank module **150**M can be installed relative to the crossbow frame **112**. Although shown as a pair of driveshaft drive gears **154**A and **154**B, one of the pair might be eliminated, or one or more additional drive gears can be added, depending on the application and the dimensions of the internal compartment **112**C. In other applications where one or more of the first secondary gear **156**A and second secondary gear **156**B are disposed outside the crossbow frame, one or more of the drive gears **154**A, **154**B likewise can be disposed outside the frame to engage those secondary gears. Moreover, in some applications, the first drive gear **154**A and the second drive gear **154**B might be combined as a single wide, unitary gear that spans and can engage the first secondary gear and the second secondary gear simultaneously.

**[0171]** The crank module **150** M can be joined and temporarily secured to the crossbow frame **112** by way of the module housing **151**B being fastened to the crossbow frame. For example, as shown in FIGS. **26**, **29** and **30**, fasteners **117**A can be disposed through respective holes **151**F and threaded to secure the housing **151**B to the surface **112**A of the crossbow frame **112**. Of course, in other applications, the housing **151**B can be secured to the crossbow frame with a clamp, a cam, a fitting, or other temporary securement structure. The structures, however, can enable the housing and the crank module **150**M and its components to be removed from the crossbow frame, reinstalled and swapped from one side of the frame to an opposing side of the frame or surface of the frame to provide right or left-handed cranking operation of the crank **150** during any draw or letdown operations.

**[0172]** The crank module can be further stabilized relative to the crossbow frame, such that the drive gears adequately and consistently mesh with the secondary gears via a mounting plate **150**P as mentioned above. The mounting plate **150**P can include a generally plate like portion and can be configured to be removed from and secured to the first surface **112**A or the second surface **112**B of the crossbow frame, generally opposite the module housing **151**B. The mounting plate thus can be mounted to a left side or a right side of the crossbow frame. When so mounted, it can be opposite the module housing, across the internal compartment within which the other components such as part of the trigger assembly are mounted.

**[0173]** Optionally, the mounting plate **150**P can define one or more mounting plate holes **150**FH, sometimes referred to as second fastener holes herein. These second fastener holes **150**FH, as shown in FIG. **25**, can be configured to receive multiple second fasteners **150**F which can align with and be threaded into respective holes **116**B defined by the crossbow frame **112**. This securement can fix the mounting plate to the crossbow frame along the first surface **112**A or the second surface **112**B depending on the orientation of the crank module **150**M. When included, the mounting plate can be disposed on an opposite side of the crossbow frame from the module housing **151**B.

**[0174]** As mentioned above, the mounting plate **150**P can include a bearing **153**BT. The bearing **153**BT can be mounted or joined with the mounting plate **150**P. In some cases, the bearing can be press fit in a bearing or central hole **150**PB of the plate. In alternative constructions, the bearing can be absent, and a low friction material or bushing can be placed within the plate hole **150**PB. As mentioned above, the drive shaft **153** can include a portion **153**C, which can be in the form of a distal end. That distal end can be registered with the mounting plate bearing **153**BT that is disposed within the hole **150**PB. The driveshaft **153** can rotate within a portion of the mounting plate bearing, for example, the inner raceway of that bearing. A fastener **153**CF can secure and register the distal end of the driveshaft **153** with the bearing **153**BT to promote consistent and even rotation of the driveshaft relative to the mounting plate.

**[0175]** Optionally, the bearing fastener **153**CF can engage a portion of the mounting plate bearing **153**BT such that the mounting plate bearing is compressed between the fastener and the driveshaft **153**. As an example, the head of the fastener **153**CF can engage the inner raceway of the bearing only, such that the inner raceway can continue to rotate relative to the outer raceway of the bearing **153**BT and thereby allow the driveshaft to spin inside and relative to the mounting plate bearing.

**[0176]** As shown in FIG. **26**, the mounting plate **150**P can include a centering ring **150**PR. The centering ring **150**PR can be sized slightly smaller than either of the openings **115**A or **115**B of the transverse mounting hole **115** defined by the crossbow frame **112**. This centering ring **150**PR can ensure that the mounting plate **150**P is registered and aligned with the driveshaft **153** and the module housing **151**B on the opposite side of the crossbow frame. This can further facilitate alignment of the drive gears with the secondary gears associated with the spool that winds the cord C**10** thereon and off depending on the operation of the crank **150**.

**[0177]** The crank module **150**M optionally can include a first drive gear **154**A and a second drive gear **154**B that engage and selectively rotate the first secondary gear **156**A and second secondary gear **156**B as described above. The crank module **150**M again can be configured to be reversed and reinstalled in the transverse crank mounting hole **115** in a first direction extending from the first surface **112**A, or a second direction extending from the second surface **112** B of the crossbow frame **112**. Generally, the crank module **150**M is selectively mountable relative to the crossbow frame on either the right side R or the left side L of the crossbow frame **112** to provide a user with the ability to operate the crossbow crank with a crank arm **150**RM in a draw mode or let down mode to the undrawn mode as explained in the embodiment above from the right side or the left side of the crossbow frame **112**.

**[0178]** A method of using the crossbow crank **150** and the crossbow **110** in general will now be described in further detail. It is to be noted however, that the actual operation of the driveshaft **153** in connection with the one-way bearing **157**, sleeve **158**, brake **159**, spacer **152**S and drive nut **152** will not be described in significant detail here because those components and elements all operate and function identically to the same or like components described in the embodiment of the crossbow and crank above. What will be described is the use of the crossbow crank **150** when accommodating right-hand or left-hand use of the crank **150** to draw, hold and/or let down a bowstring **111** of the crossbow **110**. Generally, that method of using the crossbow and/or a crossbow crank can include removing a crank module **150**M from a first surface **112**A of a crossbow frame **112** defining a crank mounting hole **115**, the crank module comprising a sleeve **158** disposed in a one-way bearing **157**, a driveshaft **153** extending through the sleeve **158** and a drive gear **154**A, **154**B to rotatably couple with a spool **156**S rotatably mounted inside the crossbow frame **112** and installing the crank module **150**M through a second surface **112**B of the crossbow frame **112** opposite the first surface **112**A so the crank module **150**M extends through the crank mounting hole **115**.

**[0179]** After the crank module is adequately installed relative to the crossbow frame **112**, the crossbow crank can be operated in a manner similar to the embodiment of the crossbow crank **50** described above. Generally, the driveshaft **153** can be rotated in a first direction, the break **159** can be axially compressed along the driveshaft to fix the driveshaft **153** with the sleeve **158** disposed around the driveshaft. The driveshaft **153**, gear **154**A, **154**B and sleeve **158** rotate in unison in the first direction. The sleeve **158** can be disposed in the one-way bearing **157** so that when said rotating in the first direction ceases, the driveshaft **153** and drive gear **154**A, **154**B are impaired from rotating in a second direction opposite the first direction via the one-way bearing **157** interacting with sleeve **158** which again is held in place and stationary relative to the module housing **151**B. The method can further include winding the cord C**1** on the spool **156**S inside the internal compartment **112**C of the crossbow frame **112**. As the cord is wound on the spool, the moving receiver **120** including a trigger latch **122** can be pulled along the crossbow frame **112** toward the spool **156**S as the cord C**10** winds on the spool. Various other operations similar to those in the methods described in the current embodiment of the crossbow **10** and crank **50** above can be performed and will not be repeated here.

**[0180]** With reference to FIGS. **26** and **27**, a method of swapping the crossbow module **150**M from one side to another of the crossbow **110** will be further described. This

activity can be performed when the crossbow **110** is in an undrawn state, and the receiver **120** is not joined with the bowstring under tension. A user can remove the first fasteners **117**A from the module housing **151**B and from the crossbow frame first surface **112**A. The fasteners can thread out of the holes **116**A in that side **112**A. The module **150**M can be withdrawn from the transverse mounting hole **115** in direction RC. As this occurs, the first drive gear **154**A disengages the first secondary gear **156**A and likewise the second drive gear **154**B disengages the second secondary gear **156**B.

**[0181]** Where a mounting plate **150**P is included in the crank **150**, the mounting plate fastener **153**CF can be removed from the distal end **153**C of the driveshaft **153**. The distal end of the driveshaft **153**C can be further removed and pulled out from engagement with the mounting plate bearing **153**BT as the module **150**M is removed from the transverse mounting hole. During the removal, the drive gears **154**A and **154**B, as well as the distal end **153**C can pass out of the internal compartment **112**C of the crossbow frame **112**, and further out of the opening **115**A past the first side surface **112**A of the crossbow frame **112**.

**[0182]** Further, where a mounting plate **150**P is included in the crank **150**, the mounting plate **150**P also can be removed from the second side surface **112**B. To do so, the mounting plate fasteners **150**F can be removed from the plate and from the second side surface **112**B of the crossbow frame. This enables the mounting plate to be removed in direction PC away from the second surface **112**B of the crossbow frame.

**[0183]** With the crank module **150**M removed from the crossbow frame, and the optional mounting plate **150**P also removed from the crossbow frame, these components can be swapped from one side to the other. As shown in FIG. **27**, the crossbow module **150**M can be rearranged and moved from the right side R to the left side L of the longitudinal axis LA in direction RR**1**. The mounting plate **150**P can be moved in direction RR**2**, generally from the left side of longitudinal axis LA to the right side R. The respective crossbow module and mounting plate can be realigned and oppose one another through the transverse mounting hole **115**. The module housing **151**B can be moved toward the second surface **112**B of the crossbow frame **112**. The mounting plate **150**P likewise can be moved toward and engage the first surface **112**A of the crossbow frame **112**.

**[0184]** With reference to FIG. **31**, the driveshaft **153** and the respective gears **154**A and **154**B can be inserted and installed into and through at least a portion of the transverse mounting hole **115**. In particular, the driveshaft and drive gears can be inserted through the second opening **115**B in the second surface **112**B. Due to the reversal of the drive gears **154**A and **154**B within the internal compartment **112**C, the second drive gear **154**B will pass beyond the second secondary gear **156**B and will engage the first secondary gear **156**A upon installation of the crank module on the second side **112**B. The first gear **154**A will engage the second secondary gear **156**B.

**[0185]** As also shown in FIG. **31**, the distal end **153**C of the drive shaft **153** will pass into the mounting plate hole **150**PB and enter into the inner raceway of the bearing **153**BT. The respective mounting plate and housing **151**B can be secured to the crossbow frame with the respective fasteners as described above. In addition, the plate bearing fastener **153**F can be threaded and installed relative to the driveshaft **153** to secure the distal end **153**C within the bearing **150**BT.

**[0186]** With all the fasteners, the mounting plate and module housing securely fastened, and those components secured to the crossbow frame, a user can install the crank arm **150**RM relative to the drive nut **152** to operate the crank module **150**M. With the reversal of the crank, module **150**M, however, the user can operate the crank **150** from the opposite side of the crossbow frame than the side from which the crank module was initially removed.

**[0187]** When the crank module **150**M is fully installed and operated, the respective components, that is, the drive nut **152**, spacer **151**S, one-way bearing **157**, sleeve **158**, brake **159**, driveshaft **153** and respective drive gears and secondary gears can operate identical to the same components described in connection with the embodiment of the crossbow **10** and crank **50** above. Accordingly, the operation, function and interaction of those components will not be described again here.

**[0188]** The following additional statements are provided, the numbering of which is not to be construed as designating levels of importance.

**[0189]** Statement A. A crossbow comprising: at least one limb joined with a frame; a bowstring joined with the limb and transverse to the frame, the bowstring moveable between a drawn mode and an undrawn mode; a trigger assembly joined with the frame and including a catch that is operable in a holding mode in which the catch retains the bowstring in the drawn mode and a drop mode that releases the bowstring so the bowstring can transition to the undrawn mode; a safety including a forward end facing toward the catch, the safety operable in a safety on mode and a safety off mode; a sled comprising: a guide that moves along the frame when the sled engages the bowstring; a bowstring engager configured to receive the bowstring during movement of the bowstring to the drawn mode with the sled; and a first stop that is selectively operable in a neutral mode in which the first stop does not interfere with rearward movement of the sled along the frame so that the bowstring can move to the drawn mode, and in a de-cocking mode in which the first stop interferes with movement of the sled along the frame so that the sled is prevented from engaging the bowstring against the forward end of the safety facing the catch, while the safety remains in the safety on mode.

**[0190]** Statement B. The crossbow of Statement A, comprising: a crossbow crank mounted to the crossbow; the crossbow crank including a sleeve disposed in a one-way bearing; a drive shaft extending through the sleeve; a drive gear joined with the drive shaft so the drive gear and drive shaft rotate in unison; a spool coupled to the drive gear, the spool configured to engage a cord; and a crank joined with the drive shaft, wherein the sled is joined with the crossbow crank via a cord wrapped on the spool.

**[0191]** Statement C. The crossbow of any preceding Statement, wherein the crossbow crank provides tension in the cord to pull the sled so that the stop engages another part of the crossbow, with the sled's movement toward the crank being arrested by such engagement of the stop.

**[0192]** Statement D. The crossbow of any preceding Statement, wherein the drive shaft and drive gear rotate in a first direction about a first axis, wherein the one-way bearing permits such rotation so that the spool rotates in a second

direction opposite the first direction, wherein the cord wraps on the spool in the second direction.

**[0193]** Statement E. The crossbow of any preceding Statement, wherein a user rotates the drive shaft and drive gear in the first direction during the de-cocking mode until the stop engages the other part of the crossbow, and wherein upon cessation of the rotating in the first direction, the cord urges the drive shaft and drive gear to rotate in the second direction, however, the one-way bearing impairs such rotation in the second direction, optionally automatically by engaging the sleeve and preventing rotation in the second direction.

**[0194]** Statement F. The crossbow of any preceding Statement, wherein a drive nut threads onto the drive shaft to axially compress a brake along the drive shaft against the sleeve to lock the sleeve and drive shaft to one another, so the sleeve is engaged by the one-way bearing to impair the rotation in the second direction.

**[0195]** Statement G. The crossbow of any preceding Statement, wherein upon rotation of a crank arm that rotates the drive shaft and drive gear in the second direction, the brake automatically releases and is no longer axially compressed along the drive shaft so that the one-way bearing no longer impairs the rotation of the drive shaft and drive gear in the second direction, because the drive shaft is no longer rotationally joined with the sleeve engaged by the one-way bearing and can rotate freely relative to the one-way bearing.

**[0196]** Statement H. The crossbow of any preceding Statement, wherein as the crank arm, drive shaft and drive gear rotate in the second direction, the spool rotates in the first direction, opposite the second direction, to allow the cord to unwind from the spool in a controlled manner during the de-cocking of the crossbow, wherein the bowstring moves farther toward the released mode.

**[0197]** Statement I. The crossbow of any preceding Statement, wherein the stop disengages the portion of the crossbow, such as a limiter, optionally a mounting arm or the frame, as the crossbow is de-cocked.

**[0198]** Statement J. The crossbow of any preceding Statement, wherein the sleeve and drive shaft automatically lock to one another upon manual actuation of the crank to rotate the drive shaft in the first direction, so that the sleeve and drive shaft rotate in unison.

**[0199]** Statement K. The crossbow of any preceding Statement, wherein the sleeve and drive shaft automatically unlock from one another upon manual actuation of the crank to rotate the drive shaft in the second direction, so that the drive shaft rotates freely relative to the sleeve.

**[0200]** Statement L. The crossbow of any preceding Statement, wherein the rotation of the drive shaft in the second direction rotates a spool on a secondary axis in the first direction so that a cord unwinds from a spool on the secondary axis, wherein the cord is attached to the sled, wherein the bowstring is under tension to urge the sled forward, away from the crank, toward a released mode, wherein a brake impairs the drive shaft, drive gear and spool from spinning uncontrollably by automatically engaging with a sleeve disposed in a one-way bearing.

**[0201]** Statement M. The crossbow of any preceding Statement, wherein a crossbow crank automatically locks via a brake being axially compressed along the drive shaft to rotationally fix the drive shaft to a sleeve, with a one-way bearing preventing the sleeve and thus drive shaft from rotating in a second direction opposite the first, whereby a user can manually move the safety to the safety off mode while the first stop is in the de-cocking mode, and subsequently activate the trigger assembly so that the bowstring can be let down from the drawn mode to the undrawn mode with the sled engaging the bowstring as the letdown occurs.

**[0202]** Although the different elements and assemblies of the embodiments are described herein as having certain functional characteristics, each element and/or its relation to other elements can be depicted or oriented in a variety of different aesthetic configurations, which support the ornamental and aesthetic aspects of the same. Simply because an apparatus, element, or assembly of one or more of elements is described herein as having a function does not mean its orientation, layout or configuration is not purely aesthetic and/ornamental in nature.

**[0203]** Directional terms, such as "vertical," "horizontal," "top," "bottom," "upper," "lower," "inner," "inwardly," "outer" and "outwardly," are used to assist in describing the invention based on the orientation of the embodiments shown in the illustrations. The use of directional terms should not be interpreted to limit the invention to any specific orientation(s).

**[0204]** In addition, when a component, part or layer is referred to as being "joined with," "on," "engaged with," "adhered to," "secured to," or "coupled to" another component, part or layer, it may be directly joined with, on, engaged with, adhered to, secured to, or coupled to the other component, part or layer, or any number of intervening components, parts or layers may be present. In contrast, when an element is referred to as being "directly joined with," "directly on," "directly engaged with," "directly adhered to," "directly secured to," or "directly coupled to" another element or layer, there may be no intervening elements or layers present. Other words used to describe the relationship between components, layers and parts should be interpreted in a like manner, such as "adjacent" versus "directly adjacent" and similar words. As used herein, the term "and/or" includes any and all combinations of one or more of the associated listed items.

**[0205]** The above description is that of current embodiments of the invention. Various alterations and changes can be made without departing from the broader aspects of the invention as defined in the appended claims, which are to be interpreted in accordance with the principles of patent law including the doctrine of equivalents. This disclosure is presented for illustrative purposes and should not be interpreted as an exhaustive description of all embodiments of the invention or to limit the scope of the claims to the specific elements illustrated or described in connection with these embodiments. For example, and without limitation, any individual element(s) of the described invention may be replaced by alternative elements that provide substantially similar functionality or otherwise provide adequate operation. This includes, for example, presently known alternative elements, such as those that might be currently known to one skilled in the art, and alternative elements that may be developed in the future, such as those that one skilled in the art might, upon development, recognize as an alternative. Further, the disclosed embodiments include a plurality of features that are described in concert and that might cooperatively provide a collection of benefits. The present invention is not limited to only those embodiments that include all of these features or that provide all of the stated benefits, except to the extent otherwise expressly set forth in the

issued claims. Any reference to claim elements in the singular, for example, using the articles "a," "an," "the" or "said," is not to be construed as limiting the element to the singular. Any reference to claim elements as "at least one of X, Y and Z" is meant to include any one of X, Y or Z individually, any combination of X, Y and Z, for example, X, Y, Z; X, Y; X, Z; Y, Z, and/or any other possible combination together or alone of those elements, noting that the same is open ended and can include other elements.

**[0206]** Reference throughout this specification to "a current embodiment" or "an embodiment" or "alternative embodiment" means that a particular feature, structure, or characteristic described in connection with the embodiment is included in at least one embodiment herein. Accordingly, the appearance of the phrases "in one embodiment" or "in an embodiment" or "in an alternative embodiment" in various places throughout this specification are not necessarily all referring to the same embodiment. Additionally, the particular features, structures, or characteristics of one embodiment are contemplated for proper and full combination in any suitable manner in one or more other embodiments, which is fully contemplated herein. Further, features, structures, or characteristics of one embodiment or multiple embodiments are readily and completely mixed and matched with any features, structures, or characteristics of any other embodiment or multiple embodiments in varying combinations and permutations.

What is claimed is:

**1**. A crossbow crank comprising:

a housing configured to removably secure to a right side or a left side of a crossbow frame;

a one-way bearing joined with the housing and defining an opening;

a sleeve disposed in the opening;

a drive shaft disposed in the opening with the sleeve disposed between the one-way bearing and the drive shaft;

a drive gear fixedly joined with the drive shaft, so the drive gear and drive shaft rotate in unison;

a spool coupled to the drive gear, the spool configured to engage a cord; and

a brake mounted along the drive shaft distal from the one-way bearing, the brake being axially compressible along the drive shaft to fixedly join the drive shaft with the sleeve when the drive shaft is rotated in a first direction, so that the drive shaft, sleeve, and drive gear rotate in unison in the first direction,

wherein the one-way bearing engages the sleeve to impair the drive shaft, sleeve, and drive gear from rotating in a second direction opposite the first direction,

wherein the housing, one way bearing, sleeve, drive shaft, drive gear and brake are joined with one another and removeable from the crossbow frame together simultaneously as a crank module,

whereby the crank module is selectively mountable relative to the crossbow frame on either the right side or the left side of the crossbow frame to provide a user with the ability to operate the crossbow crank with a crank arm in a draw mode from the right side or the left side of the crossbow frame.

**2**. The crossbow crank of claim **1**,

wherein the cord is wound on the spool,

wherein the spool is joined with a secondary gear,

wherein the drive gear is removeable from the secondary gear by removing the drive shaft from the crossbow frame with the housing.

**3**. The crossbow crank of claim **1**, comprising:

a drive nut threaded to the drive shaft and joined with the crank arm;

wherein a tension in the cord automatically urges the drive shaft to rotate in the second direction to tighten the drive nut relative to the drive shaft, thereby frictionally engaging the sleeve and the brake with one another, but the drive shaft and the drive gear being impaired from rotating in the second direction opposite the first direction via the one-way bearing interacting with the sleeve.

**4**. The crossbow crank of claim **1**, comprising:

a mounting plate configured to removably secure to the left side or the right side of the crossbow frame, opposite the housing;

a mounting plate bearing joined with the mounting plate;

wherein the drive shaft includes a distal end that is registered with the mounting plate bearing so that the drive shaft rotates with a portion of the mounting plate bearing.

**5**. The crossbow crank of claim **4**, comprising:

a bearing fastener engaging the portion of the mounting plate bearing and the distal end of the drive shaft;

wherein the mounting plate bearing is compressed between the fastener and the drive shaft.

**6**. The crossbow crank of claim **1** comprising:

a mounting plate configured to removably secure to the left side or the right side of a crossbow frame, opposite the housing;

a plurality of first fastener holes defined by the housing, configured to receive a plurality of first fasteners to secure the housing adjacent a first surface of the crossbow frame; and

a plurality of second fastener holes defined by the mounting plate, configured to receive a plurality of second fasteners to secure the mounting plate adjacent a second surface of the crossbow frame opposite the first surface.

**7**. A crossbow crank for a crossbow including a crossbow frame defining a transverse crank mounting hole, with a spool and first secondary gear mounted in the crossbow frame, the crossbow crank comprising:

a sleeve disposed in a one-way bearing;

a drive shaft extending through the sleeve and configured to extend within the transverse crank mounting hole;

a first drive gear joined with the drive shaft so the first drive gear and drive shaft rotate in unison, the first drive gear configured to engage a first secondary gear joined with a spool in the crossbow frame; and

a crank joined with the drive shaft,

wherein the sleeve, one way bearing, and drive shaft are removable from the transverse crank mounting hole together in unison in the form of a crank module,

wherein the crank module is configured to be reversed and reinstalled in the transverse crank mounting hole in an opposite direction,

whereby the crank module is selectively mountable relative to the crossbow frame on either a right side or a left side of the crossbow frame to provide a user with the

ability to operate the crossbow crank with a crank arm in a draw mode from the right side or the left side of the crossbow frame.

**8**. The crossbow crank of claim **7** comprising:

a brake mounted along the drive shaft, the brake being axially compressible along the drive shaft to automatically lock the drive shaft and the sleeve with one another when the drive shaft is rotated in the first direction;

a housing configured to be removably joined with a first surface of the crossbow frame via a plurality of first fasteners secured to the crossbow frame,

wherein the one-way bearing is inside the housing but is external to the crossbow frame when the housing is removably joined with the crossbow frame via the plurality of first fasteners secured to the crossbow frame.

**9**. The crossbow crank of claim **7**,

wherein the crank module includes a single crank arm mount so that a crank arm can be operatively joined with the crossbow crank at only the single crank arm mount.

**10**. The crossbow crank of claim **7**, comprising:

a housing configured to be removably joined with a first surface of the crossbow frame;

a mounting plate defining a plate aperture, the mounting plate configured to be removably joined with a second surface of the crossbow frame, the second surface opposite the first surface, the plate aperture configured to rotatably receive a portion of the drive shaft,

wherein the housing and mounting plate are configured to be reversed so that the housing is removably joined with the second surface and the mounting plate is removably joined with the first surface.

**11**. The crossbow crank of claim **7**, comprising:

a second drive gear joined with the drive shaft,

wherein the crank module is mountable in a first direction in the transverse crank mounting hole, such that the first drive gear is configured to engage a first secondary gear joined with a spool in the crossbow frame, and such that the second drive gear is configured to engage a secondary gear joined with the spool in the crossbow frame,

wherein the crank module is configured to be reversed and reinstalled the opposite direction to the first direction in the transverse crank mounting hole, such that the first drive gear is configured to engage a second secondary gear joined with a spool in the crossbow frame, and such that the second drive gear is configured to engage the first secondary gear joined with the spool in the crossbow frame.

**12**. The crossbow crank of claim **7**, comprising:

a housing configured to be removably joined with a first surface of the crossbow frame;

a mounting plate configured to be removably joined with a second surface of the crossbow frame, the second surface opposite the first surface;

a drive nut threadably joined with the drive shaft, the drive nut rotatably disposed in the housing opposite the mounting plate;

a crank arm joined with the drive nut,

wherein the drive shaft is configured to extend through the transverse crank mounting hole such that the drive shaft protrudes beyond the first surface and the second surface.

**13**. The crossbow crank of claim **7**, comprising:

a housing configured to be removably joined with a first surface of the crossbow frame;

a mounting plate configured to be removably joined with a second surface of the crossbow frame, the second surface opposite the first surface;

wherein the drive shaft is configured to extend through the transverse crank mounting hole defined by the crossbow frame such that the drive shaft protrudes beyond the first surface and the second surface;

wherein the housing and mounting plate are configured to be reversed so that the housing is able to be removably joined with the second surface and the mounting plate is able to be removably joined with the first surface.

**14**. A crossbow comprising:

a first limb and a second limb;

a bowstring extending between the first limb and the second limb;

a crossbow frame extending rearward from the first limb and the second limb, the crossbow frame including a transverse crank mounting hole extending from a first surface to an opposing second surface; and

a crank module comprising a sleeve disposed in a one-way bearing, a drive shaft extending through the sleeve, and a drive gear, the crank module extending through the transverse crank mounting hole in a first orientation,

wherein the crank module is removeable and replaceable relative to the crossbow frame in a second orientation opposite the first orientation.

**15**. The crossbow of claim **14**,

wherein the crank module is selectively mountable relative to the crossbow frame on either a right side or a left side of the crossbow frame in the first orientation or the second orientation to provide a user with the ability to operate the crossbow crank with a crank arm in a draw mode from the right side or the left side of the crossbow frame.

**16**. A method of using a crossbow crank, the method comprising:

removing a crank module from a first surface of a crossbow frame defining a crank mounting hole, the crank module comprising a sleeve disposed in a one-way bearing, a drive shaft extending through the sleeve, and a drive gear configured to rotatably couple with a spool rotatably mounted inside the crossbow frame; and

installing the crank module through a second surface of the crossbow frame opposite the first surface so that the crank module extends through the crank mounting hole.

**17**. The method of claim **16**, comprising:

rotating the drive shaft in a first direction; and

axially compressing a brake along the drive shaft to fixedly join the drive shaft with the sleeve disposed around the drive shaft so that the drive shaft, drive gear and sleeve rotate in unison in the first direction;

wherein the sleeve is disposed in the one-way bearing so that when said rotating in the first direction ceases, the drive shaft and drive gear are impaired from rotating in

a second direction opposite the first direction via the one-way bearing interacting with the sleeve.

**18**. The method of claim **17**, comprising:

winding a cord on the spool inside the crossbow frame; and

pulling a moving receiver including a trigger latch along the crossbow frame toward the spool as the cord winds on the spool.

**19**. The method of claim **16**, comprising:

removing a housing within which the drive shaft extends from the first surface of the crossbow frame;

removing a mounting plate from the second surface of the crossbow frame;

securing the mounting plate to the first surface of the crossbow frame;

securing the housing to the second surface of the crossbow frame.

**20**. The method of claim **16**, comprising:

disengaging the drive gear from a first secondary gear joined with the spool during said removing; and

engaging the drive gear with a second secondary gear joined with the spool during said installing, the second secondary gear being distal from the first secondary gear.

* * * * *