US012383296B2

(12) **United States Patent**
Robertson

(10) **Patent No.: US 12,383,296 B2**
(45) **Date of Patent: Aug. 12, 2025**

(54) **ULTRASONIC SURGICAL INSTRUMENT BLADES**

(71) Applicant: **Cilag GmbH International**, Zug (CH)

(72) Inventor: **Galen C. Robertson**, Apex, NC (US)

(73) Assignee: **Cilag GmbH International**, Zug (CH)

(*) Notice: Subject to any disclaimer, the term of this patent is extended or adjusted under 35 U.S.C. 154(b) by 658 days.

(21) Appl. No.: **17/683,477**

(22) Filed: **Mar. 1, 2022**

(65) **Prior Publication Data**

US 2022/0257276 A1 Aug. 18, 2022

Related U.S. Application Data

(60) Continuation of application No. 16/577,307, filed on Sep. 20, 2019, now Pat. No. 11,266,433, which is a (Continued)

(51) **Int. Cl.**
A61B 17/3205 (2006.01)
A61B 17/00 (2006.01)
A61B 17/32 (2006.01)

(52) **U.S. Cl.**
CPC .. ***A61B 17/3205*** (2013.01); ***A61B 17/320068*** (2013.01); ***A61B 17/320092*** (2013.01); (Continued)

(58) **Field of Classification Search**
CPC .... A61B 17/320068; A61B 17/320092; A61B 17/3205; A61B 2017/00973; (Continued)

(56) **References Cited**

U.S. PATENT DOCUMENTS

969,528 A 9/1910 Disbrow
1,570,025 A 1/1926 Young
(Continued)

FOREIGN PATENT DOCUMENTS

CA 837241 A 3/1970
CA 2535467 A1 4/1993
(Continued)

OTHER PUBLICATIONS

Arnoczky et al., "Thermal Modification of Conective Tissues: Basic Science Considerations and Clinical Implications," J. Am Acad Orthop Surg, vol. 8, No. 5, pp. 305-313 (Sep./Oct. 2000).
(Continued)

Primary Examiner — Jocelin C Tanner

(57) **ABSTRACT**

An ultrasonic surgical instrument including an ultrasonically actuated blade or end effector having a treatment portion. The blade can define a central axis and at least one axis which is transverse to the central axis, wherein the transverse axis can lie within a plane which is perpendicular, or normal, to the longitudinal axis and can define a cross-section of the treatment portion. Such a cross-section can include a central portion and a step extending from the central portion, wherein the central portion can comprise a width, and wherein the step can comprise a cutting edge. In at least one embodiment, the cutting edge can be defined by first and second surfaces which define an angle therebetween. In various embodiments, the position of the cutting edge and/or the angle between the cutting edge surfaces can be selected in order to balance the blade with respect to the transverse axis.

19 Claims, 37 Drawing Sheets

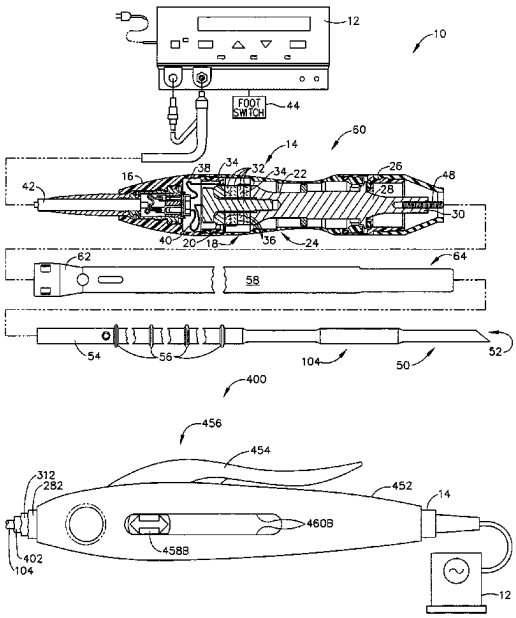

Related U.S. Application Data

continuation of application No. 15/155,367, filed on May 16, 2016, now Pat. No. 10,441,308, which is a division of application No. 14/743,687, filed on Jun. 18, 2015, now Pat. No. 9,339,289, which is a division of application No. 14/069,837, filed on Nov. 1, 2013, now Pat. No. 9,066,747, which is a division of application No. 13/270,459, filed on Oct. 11, 2011, now Pat. No. 8,591,536, which is a division of application No. 11/998,543, filed on Nov. 30, 2007, now Pat. No. 8,057,498.

(52) **U.S. Cl.**
CPC *A61B 2017/00973* (2013.01); *A61B 2017/320069* (2017.08); *A61B 2017/320071* (2017.08); *A61B 2017/320072* (2013.01); *A61B 2017/320074* (2017.08); *A61B 2017/320082* (2017.08); *A61B 2017/320084* (2013.01); *A61B 2017/320088* (2013.01); *A61B 2017/320089* (2017.08); *A61B 2017/320094* (2017.08); *Y10S 83/956* (2013.01)

(58) **Field of Classification Search**
CPC A61B 2017/320069; A61B 2017/320071; A61B 2017/320072; A61B 2017/320082; A61B 2017/320088; A61B 2017/320089; Y10S 83/956
USPC 606/169
See application file for complete search history.

(56) **References Cited**

U.S. PATENT DOCUMENTS

1,813,902 A 7/1931 Bovie
2,188,497 A 1/1940 Calva
2,366,274 A 1/1945 Luth et al.
2,425,245 A 8/1947 Johnson
2,442,966 A 6/1948 Wallace
2,458,152 A 1/1949 Eakins
2,510,693 A 6/1950 Green
2,597,564 A 5/1952 Bugg
2,704,333 A 3/1955 Calosi et al.
2,736,960 A 3/1956 Armstrong
2,743,726 A 5/1956 Grieshaber
2,748,967 A 6/1956 Roach
2,845,072 A 7/1958 Shafer
2,849,788 A 9/1958 Creek
2,867,039 A 1/1959 Zach
2,874,470 A 2/1959 Richards
2,990,616 A 7/1961 Balamuth et al.
RE25,033 E 8/1961 Balamuth et al.
3,015,961 A 1/1962 Roney
3,033,407 A 5/1962 Alfons
3,053,124 A 9/1962 Balamuth et al.
3,082,805 A 3/1963 Royce
3,166,971 A 1/1965 Stoecker
3,322,403 A 5/1967 Murphy
3,432,691 A 3/1969 Shoh
3,433,226 A 3/1969 Boyd
3,489,930 A 1/1970 Shoh
3,503,396 A 3/1970 Pierie et al.
3,503,397 A 3/1970 Fogarty et al.
3,503,398 A 3/1970 Fogarty et al.
3,513,848 A 5/1970 Winston et al.
3,514,856 A 6/1970 Camp et al.
3,525,912 A 8/1970 Wallin
3,526,219 A 9/1970 Balamuth
3,554,198 A 1/1971 Tatoian et al.
3,580,841 A 5/1971 Cadotte et al.
3,606,682 A 9/1971 Camp et al.
3,614,484 A 10/1971 Shoh
3,616,375 A 10/1971 Inoue
3,629,726 A 12/1971 Popescu
3,636,943 A 1/1972 Balamuth
3,668,486 A 6/1972 Silver
3,702,948 A 11/1972 Balamuth
3,703,651 A 11/1972 Blowers
3,776,238 A 12/1973 Peyman et al.
3,777,760 A 12/1973 Essner
3,792,701 A 2/1974 Kloz et al.
3,805,787 A 4/1974 Banko
3,809,977 A 5/1974 Balamuth et al.
3,830,098 A 8/1974 Antonevich
3,832,776 A 9/1974 Sawyer
3,854,737 A 12/1974 Gilliam, Sr.
3,862,630 A 1/1975 Balamuth
3,875,945 A 4/1975 Friedman
3,885,438 A 5/1975 Harris, Sr. et al.
3,900,823 A 8/1975 Sokal et al.
3,918,442 A 11/1975 Nikolaev et al.
3,924,335 A 12/1975 Balamuth et al.
3,946,738 A 3/1976 Newton et al.
3,955,859 A 5/1976 Stella et al.
3,956,826 A 5/1976 Perdreaux, Jr.
3,989,952 A 11/1976 Hohmann
4,005,714 A 2/1977 Hiltebrandt
4,012,647 A 3/1977 Balamuth et al.
4,034,762 A 7/1977 Cosens et al.
4,057,660 A 11/1977 Yoshida et al.
4,058,126 A 11/1977 Leveen
4,074,719 A 2/1978 Semm
4,085,893 A 4/1978 Durley, III
4,156,187 A 5/1979 Murry et al.
4,167,944 A 9/1979 Banko
4,169,984 A 10/1979 Parisi
4,173,725 A 11/1979 Asai et al.
4,188,927 A 2/1980 Harris
4,193,009 A 3/1980 Durley, III
4,200,106 A 4/1980 Douvas et al.
4,203,430 A 5/1980 Takahashi
4,203,444 A 5/1980 Bonnell et al.
4,220,154 A 9/1980 Semm
4,237,441 A 12/1980 van Konynenburg et al.
4,281,785 A 8/1981 Brooks
4,300,083 A 11/1981 Heiges
4,302,728 A 11/1981 Nakamura
4,304,987 A 12/1981 van Konynenburg
4,306,570 A 12/1981 Matthews
4,314,559 A 2/1982 Allen
4,352,459 A 10/1982 Berger et al.
4,445,063 A 4/1984 Smith
4,452,473 A 6/1984 Ruschke
4,463,759 A 8/1984 Garito et al.
4,491,132 A 1/1985 Aikins
4,492,231 A 1/1985 Auth
4,494,759 A 1/1985 Kieffer
4,504,264 A 3/1985 Kelman
4,512,344 A 4/1985 Barber
4,526,571 A 7/1985 Wuchinich
4,535,773 A 8/1985 Yoon
4,541,638 A 9/1985 Ogawa et al.
4,545,374 A 10/1985 Jacobson
4,545,926 A 10/1985 Fouts, Jr. et al.
4,550,870 A 11/1985 Krumme et al.
4,553,544 A 11/1985 Nomoto et al.
4,562,838 A 1/1986 Walker
4,574,615 A 3/1986 Bower et al.
4,582,236 A 4/1986 Hirose
4,617,927 A 10/1986 Manes
4,633,119 A 12/1986 Thompson
4,633,874 A 1/1987 Chow et al.
4,634,420 A 1/1987 Spinosa et al.
4,640,279 A 2/1987 Beard
4,641,053 A 2/1987 Takeda
4,646,738 A 3/1987 Trott
4,646,756 A 3/1987 Watmough et al.
4,649,919 A 3/1987 Thimsen et al.
4,662,068 A 5/1987 Polonsky
4,663,677 A 5/1987 Griffith et al.
4,674,502 A 6/1987 Imonti

(56) **References Cited**

U.S. PATENT DOCUMENTS

4,696,667 A 9/1987 Masch
4,708,127 A 11/1987 Abdelghani
4,712,722 A 12/1987 Hood et al.
4,735,603 A 4/1988 Goodson et al.
4,750,488 A 6/1988 Wuchinich et al.
4,761,871 A 8/1988 O'Connor et al.
4,783,997 A 11/1988 Lynnworth
4,808,154 A 2/1989 Freeman
4,819,635 A 4/1989 Shapiro
4,821,719 A 4/1989 Fogarty
4,827,911 A 5/1989 Broadwin et al.
4,830,462 A 5/1989 Karny et al.
4,832,683 A 5/1989 Idemoto et al.
4,836,186 A 6/1989 Scholz
4,838,853 A 6/1989 Parisi
4,844,064 A 7/1989 Thimsen et al.
4,849,133 A 7/1989 Yoshida et al.
4,850,354 A 7/1989 Mcgurk-Burleson et al.
4,852,578 A 8/1989 Companion et al.
4,860,745 A 8/1989 Farin et al.
4,861,332 A 8/1989 Parisi
4,862,890 A 9/1989 Stasz et al.
4,865,159 A 9/1989 Jamison
4,867,157 A 9/1989 Mcgurk-Burleson et al.
4,869,715 A 9/1989 Sherburne
4,878,493 A 11/1989 Pasternak et al.
4,880,015 A 11/1989 Nierman
4,881,550 A 11/1989 Kothe
4,896,009 A 1/1990 Pawlowski
4,903,696 A 2/1990 Stasz et al.
4,910,389 A 3/1990 Sherman et al.
4,915,643 A 4/1990 Samejima et al.
4,920,978 A 5/1990 Colvin
4,922,902 A 5/1990 Wuchinich et al.
4,936,842 A 6/1990 D'Amelio et al.
4,954,960 A 9/1990 Lo et al.
4,965,532 A 10/1990 Sakurai
4,978,067 A 12/1990 Berger et al.
4,979,952 A 12/1990 Kubota et al.
4,981,756 A 1/1991 Rhandhawa
4,983,160 A 1/1991 Steppe et al.
5,013,956 A 5/1991 Kurozumi et al.
5,015,227 A 5/1991 Broadwin et al.
5,020,514 A 6/1991 Heckele
5,026,370 A 6/1991 Lottick
5,026,387 A 6/1991 Thomas
5,035,695 A 7/1991 Weber, Jr. et al.
5,042,461 A 8/1991 Inoue et al.
5,042,707 A 8/1991 Taheri
5,047,043 A 9/1991 Kubota et al.
5,057,119 A 10/1991 Clark et al.
5,058,570 A 10/1991 Idemoto et al.
5,059,210 A 10/1991 Clark et al.
5,061,269 A 10/1991 Muller
5,084,052 A 1/1992 Jacobs
5,088,687 A 2/1992 Stender
5,096,532 A 3/1992 Neuwirth et al.
5,099,840 A 3/1992 Goble et al.
5,104,025 A 4/1992 Main et al.
5,105,117 A 4/1992 Yamaguchi
5,106,538 A 4/1992 Barma et al.
5,108,383 A 4/1992 White
5,109,819 A 5/1992 Custer et al.
5,112,300 A 5/1992 Ureche
5,123,903 A 6/1992 Quaid et al.
5,126,618 A 6/1992 Takahashi et al.
D327,872 S 7/1992 McMills et al.
D330,253 S 10/1992 Burek
5,152,762 A 10/1992 McElhenney
5,156,613 A 10/1992 Sawyer
5,156,633 A 10/1992 Smith
5,159,226 A 10/1992 Montgomery
5,160,334 A 11/1992 Billings et al.
5,162,044 A 11/1992 Gahn et al.
5,163,421 A 11/1992 Bernstein et al.
5,163,537 A 11/1992 Radev
5,167,619 A 12/1992 Wuchinich
5,167,725 A 12/1992 Clark et al.
5,172,344 A 12/1992 Ehrlich
5,174,276 A 12/1992 Crockard
D332,660 S 1/1993 Rawson et al.
5,176,677 A 1/1993 Wuchinich
5,176,695 A 1/1993 Dulebohn
5,184,605 A 2/1993 Grzeszykowski
5,188,102 A 2/1993 Idemoto et al.
D334,173 S 3/1993 Liu et al.
5,190,518 A 3/1993 Takasu
5,190,541 A 3/1993 Abele et al.
5,196,007 A 3/1993 Ellman et al.
5,205,459 A 4/1993 Brinkerhoff et al.
5,205,817 A 4/1993 Idemoto et al.
5,209,719 A 5/1993 Baruch et al.
5,209,776 A 5/1993 Bass et al.
5,213,103 A 5/1993 Martin et al.
5,213,569 A 5/1993 Davis
5,214,339 A 5/1993 Naito
5,217,460 A 6/1993 Knoepfler
5,218,529 A 6/1993 Meyer et al.
5,221,282 A 6/1993 Wuchinich
5,222,937 A 6/1993 Kagawa
5,226,909 A 7/1993 Evans et al.
5,226,910 A 7/1993 Kajiyama et al.
5,234,428 A 8/1993 Kaufman
5,234,436 A 8/1993 Eaton et al.
5,241,236 A 8/1993 Sasaki et al.
5,241,968 A 9/1993 Slater
5,242,385 A 9/1993 Strukel
5,242,460 A 9/1993 Klein et al.
5,254,129 A 10/1993 Alexander
5,257,988 A 11/1993 L'Esperance, Jr.
5,258,004 A 11/1993 Bales et al.
5,258,006 A 11/1993 Rydell et al.
5,261,922 A 11/1993 Hood
5,263,957 A 11/1993 Davison
5,264,925 A 11/1993 Shipp et al.
5,269,297 A 12/1993 Weng et al.
5,275,166 A 1/1994 Vaitekunas et al.
5,275,607 A 1/1994 Lo et al.
5,275,609 A 1/1994 Pingleton et al.
5,282,800 A 2/1994 Foshee et al.
5,282,817 A 2/1994 Hoogeboom et al.
5,285,795 A 2/1994 Ryan et al.
5,285,945 A 2/1994 Brinkerhoff et al.
5,289,436 A 2/1994 Terhune
5,290,286 A 3/1994 Parins
5,293,863 A 3/1994 Zhu et al.
5,300,068 A 4/1994 Rosar et al.
5,304,115 A 4/1994 Pflueger et al.
5,306,280 A 4/1994 Bregen et al.
D347,474 S 5/1994 Olson
5,307,976 A 5/1994 Olson et al.
5,309,927 A 5/1994 Welch
5,312,023 A 5/1994 Green et al.
5,312,327 A 5/1994 Bales et al.
5,312,425 A 5/1994 Evans et al.
5,318,525 A 6/1994 West et al.
5,318,563 A 6/1994 Malis et al.
5,318,564 A 6/1994 Eggers
5,318,570 A 6/1994 Hood et al.
5,318,589 A 6/1994 Lichtman
5,322,055 A 6/1994 Davison et al.
5,323,055 A 6/1994 Yamazaki
5,324,297 A 6/1994 Hood et al.
5,324,299 A 6/1994 Davison et al.
5,326,013 A 7/1994 Green et al.
5,326,342 A 7/1994 Pflueger et al.
5,330,471 A 7/1994 Eggers
5,330,502 A 7/1994 Hassler et al.
5,338,292 A 8/1994 Clement et al.
5,339,723 A 8/1994 Huitema
5,342,292 A 8/1994 Nita et al.
5,342,359 A 8/1994 Rydell
5,344,420 A 9/1994 Hilal et al.
5,345,937 A 9/1994 Middleman et al.

(56) **References Cited**

U.S. PATENT DOCUMENTS

5,346,502	A	9/1994	Estabrook et al.
5,353,474	A	10/1994	Good et al.
5,354,265	A	10/1994	Mackool
5,356,064	A	10/1994	Green et al.
5,357,164	A	10/1994	Imabayashi et al.
5,357,423	A	10/1994	Weaver et al.
5,358,506	A	10/1994	Green et al.
5,359,994	A	11/1994	Krauter et al.
5,361,583	A	11/1994	Huitema
5,366,466	A	11/1994	Christian et al.
5,368,557	A	11/1994	Nita et al.
5,370,645	A	12/1994	Klicek et al.
5,371,429	A	12/1994	Manna
5,372,585	A	12/1994	Tiefenbrun et al.
5,374,813	A	12/1994	Shipp
D354,564	S	1/1995	Medema
5,381,067	A	1/1995	Greenstein et al.
5,383,874	A	1/1995	Jackson et al.
5,383,883	A	1/1995	Wilk et al.
5,387,207	A	2/1995	Dyer et al.
5,387,215	A	2/1995	Fisher
5,389,098	A	2/1995	Tsuruta et al.
5,391,144	A	2/1995	Sakurai et al.
5,394,187	A	2/1995	Shipp
5,395,033	A	3/1995	Byrne et al.
5,395,312	A	3/1995	Desai
5,395,363	A	3/1995	Billings et al.
5,395,364	A	3/1995	Anderhub et al.
5,396,266	A	3/1995	Brimhall
5,396,900	A	3/1995	Slater et al.
5,397,293	A	3/1995	Alliger et al.
5,400,267	A	3/1995	Denen et al.
5,403,312	A	4/1995	Yates et al.
5,403,334	A	4/1995	Evans et al.
5,406,503	A	4/1995	Williams, Jr. et al.
5,408,268	A	4/1995	Shipp
5,409,453	A	4/1995	Lundquist et al.
D358,887	S	5/1995	Feinberg
5,411,481	A	5/1995	Allen et al.
5,413,107	A	5/1995	Oakley et al.
5,417,709	A	5/1995	Slater
5,419,761	A	5/1995	Narayanan et al.
5,421,829	A	6/1995	Olichney et al.
5,423,844	A	6/1995	Miller
5,428,504	A	6/1995	Bhatla
5,429,131	A	7/1995	Scheinman et al.
5,438,997	A	8/1995	Sieben et al.
5,441,499	A	8/1995	Fritzsch
5,443,463	A	8/1995	Stern et al.
5,445,638	A	8/1995	Rydell et al.
5,445,639	A	8/1995	Kuslich et al.
5,447,509	A	9/1995	Mills et al.
5,449,370	A	9/1995	Vaitekunas
5,451,220	A	9/1995	Ciervo
5,451,227	A	9/1995	Michaelson
5,456,684	A	10/1995	Schmidt et al.
5,458,598	A	10/1995	Feinberg et al.
5,462,604	A	10/1995	Shibano et al.
5,465,895	A	11/1995	Knodel et al.
5,471,988	A	12/1995	Fujio et al.
5,472,443	A	12/1995	Cordis et al.
5,476,479	A	12/1995	Green et al.
5,478,003	A	12/1995	Green et al.
5,480,409	A	1/1996	Riza
5,483,501	A	1/1996	Park et al.
5,484,436	A	1/1996	Eggers et al.
5,486,162	A	1/1996	Brumbach
5,486,189	A	1/1996	Mudry et al.
5,490,860	A	2/1996	Middle et al.
5,496,317	A	3/1996	Goble et al.
5,496,411	A	3/1996	Candy
5,499,992	A	3/1996	Meade et al.
5,500,216	A	3/1996	Julian et al.
5,501,654	A	3/1996	Failla et al.
5,503,616	A	4/1996	Jones
5,504,650	A	4/1996	Katsui et al.
5,505,693	A	4/1996	Mackool
5,507,738	A	4/1996	Ciervo
5,509,922	A	4/1996	Aranyi et al.
5,511,556	A	4/1996	DeSantis
5,520,704	A	5/1996	Castro et al.
5,522,832	A	6/1996	Kugo et al.
5,522,839	A	6/1996	Pilling
5,527,273	A	6/1996	Manna et al.
5,527,331	A	6/1996	Kresch et al.
5,531,744	A	7/1996	Nardella et al.
5,540,681	A	7/1996	Strul et al.
5,540,693	A	7/1996	Fisher
5,542,916	A	8/1996	Hirsch et al.
5,553,675	A	9/1996	Pitzen et al.
5,558,671	A	9/1996	Yates
5,562,609	A	10/1996	Brumbach
5,562,610	A	10/1996	Brumbach
5,562,659	A	10/1996	Morris
5,562,703	A	10/1996	Desai
5,563,179	A	10/1996	Stone et al.
5,569,164	A	10/1996	Lurz
5,571,121	A	11/1996	Heifetz
5,573,424	A	11/1996	Poppe
5,573,534	A	11/1996	Stone
5,575,799	A	11/1996	Bolanos et al.
5,577,654	A	11/1996	Bishop
5,582,618	A	12/1996	Chin et al.
5,584,830	A	12/1996	Ladd et al.
5,591,187	A	1/1997	Dekel
5,593,414	A	1/1997	Shipp et al.
5,599,350	A	2/1997	Schulze et al.
5,601,601	A	2/1997	Tal et al.
5,603,773	A	2/1997	Campbell
5,607,436	A	3/1997	Pratt et al.
5,607,450	A	3/1997	Zvenyatsky et al.
5,609,573	A	3/1997	Sandock
5,611,813	A	3/1997	Lichtman
5,618,304	A	4/1997	Hart et al.
5,618,307	A	4/1997	Donlon et al.
5,618,492	A	4/1997	Auten et al.
5,620,447	A	4/1997	Smith et al.
5,624,452	A	4/1997	Yates
5,626,578	A	5/1997	Tihon
5,626,587	A	5/1997	Bishop et al.
5,626,595	A	5/1997	Sklar et al.
5,628,760	A	5/1997	Knoepfler
5,630,420	A	5/1997	Vaitekunas
5,632,432	A	5/1997	Schulze et al.
5,632,717	A	5/1997	Yoon
5,640,741	A	6/1997	Yano
D381,077	S	7/1997	Hunt
5,643,301	A	7/1997	Mollenauer
5,647,851	A	7/1997	Pokras
5,647,871	A	7/1997	Levine et al.
5,649,937	A	7/1997	Bito et al.
5,649,955	A	7/1997	Hashimoto et al.
5,651,780	A	7/1997	Jackson et al.
5,653,713	A	8/1997	Michelson
5,658,281	A	8/1997	Heard
5,662,662	A	9/1997	Bishop et al.
5,662,667	A	9/1997	Knodel
5,665,085	A	9/1997	Nardella
5,665,100	A	9/1997	Yoon
5,669,922	A	9/1997	Hood
5,674,219	A	10/1997	Monson et al.
5,674,220	A	10/1997	Fox et al.
5,674,235	A	10/1997	Parisi
5,678,568	A	10/1997	Uchikubo et al.
5,688,270	A	11/1997	Yates et al.
5,690,269	A	11/1997	Bolanos et al.
5,693,051	A	12/1997	Schulze et al.
5,694,936	A	12/1997	Fujimoto et al.
5,695,510	A	12/1997	Hood
5,700,261	A	12/1997	Brinkerhoff
5,704,534	A	1/1998	Huitema et al.
5,704,791	A	1/1998	Gillio
5,709,680	A	1/1998	Yates et al.
5,711,472	A	1/1998	Bryan

(56) **References Cited**

U.S. PATENT DOCUMENTS

5,713,896	A	2/1998	Nardella
5,715,817	A	2/1998	Stevens-Wright et al.
5,716,366	A	2/1998	Yates
5,717,306	A	2/1998	Shipp
5,720,742	A	2/1998	Zacharias
5,720,744	A	2/1998	Eggleston et al.
5,722,980	A	3/1998	Schulz et al.
5,725,536	A	3/1998	Oberlin et al.
5,728,130	A	3/1998	Ishikawa et al.
5,730,752	A	3/1998	Alden et al.
5,733,074	A	3/1998	Stock et al.
5,735,848	A	4/1998	Yates et al.
5,735,875	A	4/1998	Bonutti et al.
5,741,226	A	4/1998	Strukel et al.
5,743,906	A	4/1998	Parins et al.
5,752,973	A	5/1998	Kieturakis
5,755,717	A	5/1998	Yates et al.
5,762,255	A	6/1998	Chrisman et al.
5,766,164	A	6/1998	Mueller et al.
5,772,659	A	6/1998	Becker et al.
5,776,130	A	7/1998	Buysse et al.
5,776,155	A	7/1998	Beaupre et al.
5,779,130	A	7/1998	Alesi et al.
5,779,701	A	7/1998	McBrayer et al.
5,782,834	A	7/1998	Lucey et al.
5,792,135	A	8/1998	Madhani et al.
5,792,138	A	8/1998	Shipp
5,792,165	A	8/1998	Klieman et al.
5,796,188	A	8/1998	Bays
5,797,537	A	8/1998	Oberlin et al.
5,797,941	A	8/1998	Schulze et al.
5,797,959	A	8/1998	Castro et al.
5,800,432	A	9/1998	Swanson
5,800,448	A	9/1998	Banko
5,800,449	A	9/1998	Wales
5,805,140	A	9/1998	Rosenberg et al.
5,807,310	A	9/1998	Hood
5,807,393	A	9/1998	Williamson, IV et al.
5,808,396	A	9/1998	Boukhny
5,810,811	A	9/1998	Yates et al.
5,810,828	A	9/1998	Lightman et al.
5,810,859	A	9/1998	DiMatteo et al.
5,810,869	A	9/1998	Kaplan et al.
5,817,033	A	10/1998	DeSantis et al.
5,817,084	A	10/1998	Jensen
5,817,093	A	10/1998	Williamson, IV et al.
5,817,119	A	10/1998	Klieman et al.
5,820,009	A	10/1998	Melling et al.
5,823,197	A	10/1998	Edwards
5,827,323	A	10/1998	Klieman et al.
5,828,160	A	10/1998	Sugishita
5,833,696	A	11/1998	Whitfield et al.
5,836,897	A	11/1998	Sakurai et al.
5,836,909	A	11/1998	Cosmescu
5,836,943	A	11/1998	Miller, III
5,836,957	A	11/1998	Schulz et al.
5,836,990	A	11/1998	Li
5,843,109	A	12/1998	Mehta et al.
5,851,212	A	12/1998	Zirps et al.
5,853,290	A	12/1998	Winston
5,853,412	A	12/1998	Mayenberger
5,858,018	A	1/1999	Shipp et al.
5,865,361	A	2/1999	Milliman et al.
5,873,873	A	2/1999	Smith et al.
5,873,882	A	2/1999	Straub et al.
5,876,401	A	3/1999	Schulze et al.
5,878,193	A	3/1999	Wang et al.
5,879,363	A	3/1999	Urich
5,879,364	A	3/1999	Bromfield et al.
5,880,668	A	3/1999	Hall
5,883,615	A	3/1999	Fago et al.
5,891,142	A	4/1999	Eggers et al.
5,893,835	A	4/1999	Witt et al.
5,893,880	A	4/1999	Egan et al.
5,895,412	A	4/1999	Tucker
5,897,523	A	4/1999	Wright et al.
5,897,569	A	4/1999	Kellogg et al.
5,903,607	A	5/1999	Tailliet
5,904,681	A	5/1999	West, Jr.
5,906,625	A	5/1999	Bito et al.
5,906,627	A	5/1999	Spaulding
5,906,628	A	5/1999	Miyawaki et al.
5,910,129	A	6/1999	Koblish et al.
5,910,150	A	6/1999	Saadat
5,911,699	A	6/1999	Anis et al.
5,916,229	A	6/1999	Evans
5,921,956	A	7/1999	Grinberg et al.
5,929,846	A	7/1999	Rosenberg et al.
5,935,143	A	8/1999	Hood
5,935,144	A	8/1999	Estabrook
5,938,633	A	8/1999	Beaupre
5,941,887	A	8/1999	Steen et al.
5,944,718	A	8/1999	Austin et al.
5,944,737	A	8/1999	Tsonton et al.
5,947,984	A	9/1999	Whipple
5,954,736	A	9/1999	Bishop et al.
5,954,746	A	9/1999	Holthaus et al.
5,957,882	A	9/1999	Nita et al.
5,957,943	A	9/1999	Vaitekunas
5,968,007	A	10/1999	Simon et al.
5,968,060	A	10/1999	Kellogg
5,971,949	A	10/1999	Levin et al.
5,974,342	A	10/1999	Petrofsky
D416,089	S	11/1999	Barton et al.
5,980,510	A	11/1999	Tsonton et al.
5,980,546	A	11/1999	Hood
5,984,938	A	11/1999	Yoon
5,989,274	A	11/1999	Davison et al.
5,989,275	A	11/1999	Estabrook et al.
5,993,465	A	11/1999	Shipp et al.
5,993,972	A	11/1999	Reich et al.
5,994,855	A	11/1999	Lundell et al.
6,001,120	A	12/1999	Levin
6,003,517	A	12/1999	Sheffield et al.
6,004,335	A	12/1999	Vaitekunas et al.
6,007,552	A	12/1999	Fogarty et al.
6,010,054	A	1/2000	Johnson et al.
6,013,052	A	1/2000	Durman et al.
6,024,741	A	2/2000	Williamson, IV et al.
6,024,744	A	2/2000	Kese et al.
6,024,750	A	2/2000	Mastri et al.
6,027,515	A	2/2000	Cimino
6,031,526	A	2/2000	Shipp
6,033,375	A	3/2000	Brumbach
6,033,399	A	3/2000	Gines
6,036,667	A	3/2000	Manna et al.
6,036,707	A	3/2000	Spaulding
6,039,734	A	3/2000	Goble
6,048,224	A	4/2000	Kay
6,050,943	A	4/2000	Slayton et al.
6,050,996	A	4/2000	Schmaltz et al.
6,051,010	A	4/2000	DiMatteo et al.
6,053,906	A	4/2000	Honda et al.
6,056,735	A	5/2000	Okada et al.
6,063,050	A	5/2000	Manna et al.
6,063,098	A	5/2000	Houser et al.
6,066,132	A	5/2000	Chen et al.
6,066,151	A	5/2000	Miyawaki et al.
6,068,627	A	5/2000	Orszulak et al.
6,068,629	A	5/2000	Haissaguerre et al.
6,068,647	A	5/2000	Witt et al.
6,074,389	A	6/2000	Levine et al.
6,077,285	A	6/2000	Boukhny
6,083,191	A	7/2000	Rose
6,086,544	A	7/2000	Hibner et al.
6,086,584	A	7/2000	Miller
6,090,120	A	7/2000	Wright et al.
6,091,995	A	7/2000	Ingle et al.
6,096,033	A	8/2000	Tu et al.
6,099,483	A	8/2000	Palmer et al.
6,099,542	A	8/2000	Cohn et al.
6,099,550	A	8/2000	Yoon
6,109,500	A	8/2000	Alli et al.
6,110,127	A	8/2000	Suzuki

(56) **References Cited**

U.S. PATENT DOCUMENTS

6,113,594	A	9/2000	Savage
6,113,598	A	9/2000	Baker
6,117,152	A	9/2000	Huitema
6,120,519	A	9/2000	Weber et al.
H1904	H	10/2000	Yates et al.
6,126,629	A	10/2000	Perkins
6,129,735	A	10/2000	Okada et al.
6,129,740	A	10/2000	Michelson
6,132,368	A	10/2000	Cooper
6,132,427	A	10/2000	Jones et al.
6,132,448	A	10/2000	Perez et al.
6,139,320	A	10/2000	Hahn
6,139,561	A	10/2000	Shibata et al.
6,142,615	A	11/2000	Qiu et al.
6,142,994	A	11/2000	Swanson et al.
6,144,402	A	11/2000	Norsworthy et al.
6,147,560	A	11/2000	Erhage et al.
6,152,902	A	11/2000	Christian et al.
6,152,923	A	11/2000	Ryan
6,154,198	A	11/2000	Rosenberg
6,156,029	A	12/2000	Mueller
6,159,160	A	12/2000	Hsei et al.
6,159,175	A	12/2000	Strukel et al.
6,162,194	A	12/2000	Shipp
6,162,208	A	12/2000	Hipps
6,165,150	A	12/2000	Banko
6,165,186	A	12/2000	Fogarty et al.
6,165,191	A	12/2000	Shibata et al.
6,174,309	B1	1/2001	Wrublewski et al.
6,174,310	B1	1/2001	Kirwan, Jr.
6,176,857	B1	1/2001	Ashley
6,179,853	B1	1/2001	Sachse et al.
6,183,426	B1	2/2001	Akisada et al.
6,187,003	B1	2/2001	Buysse et al.
6,190,386	B1	2/2001	Rydell
6,193,709	B1	2/2001	Miyawaki et al.
6,204,592	B1	3/2001	Hur
6,205,855	B1	3/2001	Pfeiffer
6,206,844	B1	3/2001	Reichel et al.
6,206,876	B1	3/2001	Levine et al.
6,206,877	B1	3/2001	Kese et al.
6,210,337	B1	4/2001	Dunham et al.
6,210,402	B1	4/2001	Olsen et al.
6,210,403	B1	4/2001	Klicek
6,214,023	B1	4/2001	Whipple et al.
6,217,591	B1	4/2001	Egan et al.
6,228,080	B1	5/2001	Gines
6,228,104	B1	5/2001	Fogarty et al.
6,231,565	B1	5/2001	Tovey et al.
6,233,476	B1	5/2001	Strommer et al.
6,238,366	B1	5/2001	Savage et al.
6,241,724	B1	6/2001	Fleischman et al.
6,245,065	B1	6/2001	Panescu et al.
6,251,110	B1	6/2001	Wampler
6,252,110	B1	6/2001	Uemura et al.
D444,365	S	7/2001	Bass et al.
D445,092	S	7/2001	Lee
D445,764	S	7/2001	Lee
6,254,623	B1	7/2001	Haibel, Jr. et al.
6,257,241	B1	7/2001	Wampler
6,258,034	B1	7/2001	Hanafy
6,259,230	B1	7/2001	Chou
6,267,761	B1	7/2001	Ryan
6,270,471	B1	8/2001	Hechel et al.
6,270,831	B2	8/2001	Kumar et al.
6,273,852	B1	8/2001	Lehe et al.
6,273,902	B1	8/2001	Fogarty et al.
6,274,963	B1	8/2001	Estabrook et al.
6,277,115	B1	8/2001	Saadat
6,277,117	B1	8/2001	Tetzlaff et al.
6,278,218	B1	8/2001	Madan et al.
6,280,407	B1	8/2001	Manna et al.
6,283,981	B1	9/2001	Beaupre
6,287,344	B1	9/2001	Wampler et al.
6,290,575	B1	9/2001	Shipp
6,292,700	B1	9/2001	Morrison et al.
6,293,954	B1	9/2001	Fogarty et al.
6,299,591	B1	10/2001	Banko
6,299,621	B1	10/2001	Fogarty et al.
6,306,131	B1	10/2001	Hareyama et al.
6,306,157	B1	10/2001	Shchervinsky
6,309,400	B2	10/2001	Beaupre
6,311,783	B1	11/2001	Harpell
6,312,434	B1	11/2001	Sutrina et al.
6,312,445	B1	11/2001	Fogarty et al.
6,319,221	B1	11/2001	Savage et al.
6,325,795	B1	12/2001	Lindemann et al.
6,325,799	B1	12/2001	Goble
6,325,811	B1	12/2001	Messerly
6,328,751	B1	12/2001	Beaupre
6,332,891	B1	12/2001	Himes
6,333,488	B1	12/2001	Lawrence et al.
6,338,657	B1	1/2002	Harper et al.
6,340,352	B1	1/2002	Okada et al.
6,340,878	B1	1/2002	Oglesbee
6,350,269	B1	2/2002	Shipp et al.
6,352,532	B1	3/2002	Kramer et al.
6,358,264	B2	3/2002	Banko
6,364,888	B1	4/2002	Niemeyer et al.
6,379,320	B1	4/2002	Lafon et al.
D457,958	S	5/2002	Dycus et al.
6,383,194	B1	5/2002	Pothula
6,384,690	B1	5/2002	Wilhelmsson et al.
6,387,094	B1	5/2002	Eitenmuller
6,387,109	B1	5/2002	Davison et al.
6,387,112	B1	5/2002	Fogarty et al.
6,388,657	B1	5/2002	Natoli
6,391,026	B1	5/2002	Hung et al.
6,391,042	B1	5/2002	Cimino
6,398,779	B1	6/2002	Buysse et al.
6,402,743	B1	6/2002	Orszulak et al.
6,402,748	B1	6/2002	Schoenman et al.
6,405,733	B1	6/2002	Fogarty et al.
6,409,722	B1	6/2002	Hoey et al.
6,409,743	B1	6/2002	Fenton, Jr.
H2037	H	7/2002	Yates et al.
6,416,469	B1	7/2002	Phung et al.
6,416,486	B1	7/2002	Wampler
6,416,525	B1	7/2002	Shibata
6,419,675	B1	7/2002	Gallo, Sr.
6,423,073	B2	7/2002	Bowman
6,423,082	B1	7/2002	Houser et al.
6,425,906	B1	7/2002	Young et al.
6,425,907	B1	7/2002	Shibata et al.
6,428,538	B1	8/2002	Blewett et al.
6,428,539	B1	8/2002	Baxter et al.
6,430,446	B1	8/2002	Knowlton
6,432,118	B1	8/2002	Messerly
6,436,114	B1	8/2002	Novak et al.
6,436,115	B1	8/2002	Beaupre
6,440,062	B1	8/2002	Ouchi
6,443,968	B1	9/2002	Holthaus et al.
6,443,969	B1	9/2002	Novak et al.
6,449,006	B1	9/2002	Shipp
6,454,781	B1	9/2002	Witt et al.
6,454,782	B1	9/2002	Schwemberger
6,458,128	B1	10/2002	Schulze
6,458,130	B1	10/2002	Frazier et al.
6,458,142	B1	10/2002	Faller et al.
6,461,363	B1	10/2002	Gadberry et al.
6,464,689	B1	10/2002	Qin et al.
6,464,702	B2	10/2002	Schulze et al.
6,468,286	B2	10/2002	Mastri et al.
6,475,211	B2	11/2002	Chess et al.
6,475,215	B1	11/2002	Tanrisever
6,480,796	B2	11/2002	Wiener
6,485,490	B2	11/2002	Wampler et al.
6,491,690	B1	12/2002	Goble et al.
6,491,701	B2	12/2002	Tierney et al.
6,491,708	B2	12/2002	Madan et al.
6,497,715	B2	12/2002	Satou
6,498,421	B1	12/2002	Oh et al.
6,500,112	B1	12/2002	Khouri
6,500,176	B1	12/2002	Truckai et al.

(56) **References Cited**

U.S. PATENT DOCUMENTS

6,500,188 B2 12/2002 Harper et al.
6,500,312 B2 12/2002 Wedekamp
6,503,248 B1 1/2003 Levine
6,506,208 B2 1/2003 Hunt et al.
6,511,478 B1 1/2003 Burnside et al.
6,511,480 B1 1/2003 Tetzlaff et al.
6,511,493 B1 1/2003 Moutafis et al.
6,514,252 B2 2/2003 Nezhat et al.
6,514,267 B2 2/2003 Jewett
6,517,565 B1 2/2003 Whitman et al.
6,524,251 B2 2/2003 Rabiner et al.
6,524,316 B1 2/2003 Nicholson et al.
6,526,976 B1 3/2003 Baran
6,527,736 B1 3/2003 Attinger et al.
6,531,846 B1 3/2003 Smith
6,533,784 B2 3/2003 Truckai et al.
6,537,272 B2 3/2003 Christopherson et al.
6,537,291 B2 3/2003 Friedman et al.
6,543,452 B1 4/2003 Lavigne
6,543,456 B1 4/2003 Freeman
6,544,260 B1 4/2003 Markel et al.
6,551,309 B1 4/2003 LePivert
6,554,829 B2 4/2003 Schulze et al.
6,558,376 B2 5/2003 Bishop
6,561,983 B2 5/2003 Cronin et al.
6,562,035 B1 5/2003 Levin
6,562,037 B2 5/2003 Paton et al.
6,562,059 B2 5/2003 Edwards et al.
6,565,558 B1 5/2003 Lindenmeier et al.
6,569,109 B2 5/2003 Sakurai et al.
6,569,178 B1 5/2003 Miyawaki et al.
6,572,563 B2 6/2003 Ouchi
6,572,632 B2 6/2003 Zisterer et al.
6,572,639 B1 6/2003 Ingle et al.
6,575,929 B2 6/2003 Sussman et al.
6,575,969 B1 6/2003 Rittman, III et al.
6,582,427 B1 6/2003 Goble et al.
6,582,451 B1 6/2003 Marucci et al.
6,584,360 B2 6/2003 Francischelli et al.
D477,408 S 7/2003 Bromley
6,585,735 B1 7/2003 Frazier et al.
6,588,277 B2 7/2003 Giordano et al.
6,589,200 B1 7/2003 Schwemberger et al.
6,589,239 B2 7/2003 Khandkar et al.
6,599,288 B2 7/2003 Maguire et al.
6,602,229 B2 8/2003 Coss
6,602,252 B2 8/2003 Mollenauer
6,607,540 B1 8/2003 Shipp
6,610,059 B1 8/2003 West, Jr.
6,610,060 B2 8/2003 Mulier et al.
6,616,450 B2 9/2003 Mossle et al.
6,619,529 B2 9/2003 Green et al.
6,620,161 B2 9/2003 Schulze et al.
6,622,731 B2 9/2003 Daniel et al.
6,623,444 B2 9/2003 Babaev
6,623,482 B2 9/2003 Pendekanti et al.
6,623,500 B1 9/2003 Cook et al.
6,623,501 B2 9/2003 Heller et al.
6,626,848 B2 9/2003 Neuenfeldt
6,626,926 B2 9/2003 Friedman et al.
6,629,974 B2 10/2003 Penny et al.
6,633,234 B2 10/2003 Wiener et al.
6,635,057 B2 10/2003 Harano et al.
6,644,532 B2 11/2003 Green et al.
6,648,839 B2 11/2003 Manna et al.
6,648,883 B2 11/2003 Francischelli et al.
6,651,669 B1 11/2003 Burnside
6,652,513 B2 11/2003 Panescu et al.
6,652,539 B2 11/2003 Shipp et al.
6,652,545 B2 11/2003 Shipp et al.
6,656,124 B2 12/2003 Flesch et al.
6,656,132 B1 12/2003 Ouchi
6,656,177 B2 12/2003 Truckai et al.
6,656,198 B2 12/2003 Tsonton et al.
6,660,017 B2 12/2003 Beaupre
6,662,127 B2 12/2003 Wiener et al.
6,663,941 B2 12/2003 Brown et al.
6,666,860 B1 12/2003 Takahashi
6,666,875 B1 12/2003 Sakurai et al.
6,669,690 B1 12/2003 Okada et al.
6,669,696 B2 12/2003 Bacher et al.
6,669,710 B2 12/2003 Moutafis et al.
6,673,248 B2 1/2004 Chowdhury
6,676,660 B2 1/2004 Wampler et al.
6,678,621 B2 1/2004 Wiener et al.
6,679,875 B2 1/2004 Honda et al.
6,679,882 B1 1/2004 Kornerup
6,679,899 B2 1/2004 Wiener et al.
6,682,501 B1 1/2004 Nelson et al.
6,682,544 B2 1/2004 Mastri et al.
6,685,701 B2 2/2004 Orszulak et al.
6,685,703 B2 2/2004 Pearson et al.
6,689,086 B1 2/2004 Nita et al.
6,689,145 B2 2/2004 Lee et al.
6,689,146 B1 2/2004 Himes
6,690,960 B2 2/2004 Chen et al.
6,692,514 B2 2/2004 Fogarty et al.
6,695,782 B2 2/2004 Ranucci et al.
6,695,840 B2 2/2004 Schulze
6,699,214 B2 3/2004 Gellman
6,702,761 B1 3/2004 Damadian et al.
6,702,821 B2 3/2004 Bonutti
6,712,805 B2 3/2004 Weimann
6,716,215 B1 4/2004 David et al.
6,719,692 B2 4/2004 Kleffner et al.
6,719,765 B2 4/2004 Bonutti
6,719,766 B1 4/2004 Buelna et al.
6,719,776 B2 4/2004 Baxter et al.
6,722,552 B2 4/2004 Fenton, Jr.
6,723,091 B2 4/2004 Goble et al.
D490,059 S 5/2004 Conway et al.
6,731,047 B2 5/2004 Kauf et al.
6,733,498 B2 5/2004 Paton et al.
6,733,506 B1 5/2004 McDevitt et al.
6,736,813 B2 5/2004 Yamauchi et al.
6,739,872 B1 5/2004 Turri
6,740,079 B1 5/2004 Eggers et al.
D491,666 S 6/2004 Kimmell et al.
6,743,245 B2 6/2004 Lobdell
6,746,284 B1 6/2004 Spink, Jr.
6,746,443 B1 6/2004 Morley et al.
6,752,154 B2 6/2004 Fogarty et al.
6,752,815 B2 6/2004 Beaupre
6,755,825 B2 6/2004 Shoenman et al.
6,761,698 B2 7/2004 Shibata et al.
6,762,535 B2 7/2004 Take et al.
6,766,202 B2 7/2004 Underwood et al.
6,770,072 B1 8/2004 Truckai et al.
6,773,409 B2 8/2004 Truckai et al.
6,773,434 B2 8/2004 Ciarrocca
6,773,435 B2 8/2004 Schulze et al.
6,773,443 B2 8/2004 Truwit et al.
6,773,444 B2 8/2004 Messerly
6,775,575 B2 8/2004 Bommannan et al.
6,778,023 B2 8/2004 Christensen
6,783,524 B2 8/2004 Anderson et al.
6,786,382 B1 9/2004 Hoffman
6,786,383 B2 9/2004 Stegelmann
6,789,939 B2 9/2004 Schrodinger et al.
6,790,173 B2 9/2004 Saadat et al.
6,790,216 B1 9/2004 Ishikawa
6,794,027 B1 9/2004 Araki et al.
6,796,981 B2 9/2004 Wham et al.
D496,997 S 10/2004 Dycus et al.
6,800,085 B2 10/2004 Selmon et al.
6,802,843 B2 10/2004 Truckai et al.
6,808,525 B2 10/2004 Latterell et al.
6,809,508 B2 10/2004 Donofrio
6,810,281 B2 10/2004 Brock et al.
6,811,842 B1 11/2004 Ehrnsperger et al.
6,814,731 B2 11/2004 Swanson
6,821,273 B2 11/2004 Mollenauer
6,827,712 B2 12/2004 Tovey et al.
6,828,712 B2 12/2004 Battaglin et al.

(56) **References Cited**

U.S. PATENT DOCUMENTS

6,832,988	B2	12/2004	Sproul
6,835,082	B2	12/2004	Gonnering
6,835,199	B2	12/2004	McGuckin, Jr. et al.
6,840,938	B1	1/2005	Morley et al.
6,849,073	B2	2/2005	Hoey et al.
6,860,878	B2	3/2005	Brock
6,860,880	B2	3/2005	Treat et al.
6,863,676	B2	3/2005	Lee et al.
6,869,439	B2	3/2005	White et al.
6,875,220	B2	4/2005	Du et al.
6,877,647	B2	4/2005	Green et al.
6,882,439	B2	4/2005	Ishijima
6,887,209	B2	5/2005	Kadziauskas et al.
6,887,221	B1	5/2005	Baillargeon et al.
6,887,252	B1	5/2005	Okada et al.
6,893,435	B2	5/2005	Goble
6,899,685	B2	5/2005	Kermode et al.
6,905,497	B2	6/2005	Truckai et al.
6,908,463	B2	6/2005	Treat et al.
6,908,466	B1	6/2005	Bonutti et al.
6,908,472	B2	6/2005	Wiener et al.
6,913,579	B2	7/2005	Truckai et al.
6,915,623	B2	7/2005	Dey et al.
6,923,804	B2	8/2005	Eggers et al.
6,926,712	B2	8/2005	Phan
6,926,716	B2	8/2005	Baker et al.
6,926,717	B1	8/2005	Garito et al.
6,929,602	B2	8/2005	Hirakui et al.
6,929,622	B2	8/2005	Chian
6,929,632	B2	8/2005	Nita et al.
6,929,644	B2	8/2005	Truckai et al.
6,932,876	B1	8/2005	Statnikov
6,933,656	B2	8/2005	Matsushita et al.
D509,589	S	9/2005	Wells
6,942,660	B2	9/2005	Pantera et al.
6,942,676	B2	9/2005	Buelna
6,942,677	B2	9/2005	Nita et al.
6,945,981	B2	9/2005	Donofrio et al.
6,946,779	B2	9/2005	Birgel
6,948,503	B2	9/2005	Refior et al.
6,953,461	B2	10/2005	McClurken et al.
6,958,070	B2	10/2005	Witt et al.
D511,145	S	11/2005	Donofrio et al.
6,974,450	B2	12/2005	Weber et al.
6,976,844	B2	12/2005	Hickok et al.
6,976,969	B2	12/2005	Messerly
6,977,495	B2	12/2005	Donofrio
6,979,332	B2	12/2005	Adams
6,981,628	B2	1/2006	Wales
6,984,220	B2	1/2006	Wuchinich
6,988,295	B2	1/2006	Tillim
6,989,017	B2	1/2006	Howell et al.
6,994,708	B2	2/2006	Manzo
6,994,709	B2	2/2006	Iida
7,000,818	B2	2/2006	Shelton, IV et al.
7,001,335	B2	2/2006	Adachi et al.
7,001,382	B2	2/2006	Gallo, Sr.
7,002,283	B2	2/2006	Li et al.
7,004,951	B2	2/2006	Gibbens, III
7,011,657	B2	3/2006	Truckai et al.
7,014,638	B2	3/2006	Michelson
7,018,354	B2	3/2006	Tazi
7,018,389	B2	3/2006	Camerlengo
7,033,357	B2	4/2006	Baxter et al.
7,037,306	B2	5/2006	Podany et al.
7,041,083	B2	5/2006	Chu et al.
7,041,088	B2	5/2006	Nawrocki et al.
7,041,102	B2	5/2006	Truckai et al.
7,044,949	B2	5/2006	Orszulak et al.
7,052,494	B2	5/2006	Goble et al.
7,052,496	B2	5/2006	Yamauchi
7,055,731	B2	6/2006	Shelton, IV et al.
7,062,314	B2	6/2006	Zhu et al.
7,063,699	B2	6/2006	Hess et al.
7,066,893	B2	6/2006	Hibner et al.
7,066,895	B2	6/2006	Podany
7,066,936	B2	6/2006	Ryan
7,070,597	B2	7/2006	Truckai et al.
7,074,218	B2	7/2006	Washington et al.
7,074,219	B2	7/2006	Levine et al.
7,077,036	B1	7/2006	Adams
7,077,039	B2	7/2006	Gass et al.
7,077,845	B2	7/2006	Hacker et al.
7,077,853	B2	7/2006	Kramer et al.
7,083,075	B2	8/2006	Swayze et al.
7,083,618	B2	8/2006	Couture et al.
7,083,619	B2	8/2006	Truckai et al.
7,087,054	B2	8/2006	Truckai et al.
7,090,672	B2	8/2006	Underwood et al.
7,094,235	B2	8/2006	Francischelli
7,101,371	B2	9/2006	Dycus et al.
7,101,372	B2	9/2006	Dycus et al.
7,101,373	B2	9/2006	Dycus et al.
7,101,378	B2	9/2006	Salameh et al.
7,104,834	B2	9/2006	Robinson et al.
7,108,695	B2	9/2006	Witt et al.
7,111,769	B2	9/2006	Wales et al.
7,112,201	B2	9/2006	Truckai et al.
D531,311	S	10/2006	Guerra et al.
7,117,034	B2	10/2006	Kronberg
7,118,564	B2	10/2006	Ritchie et al.
7,118,570	B2	10/2006	Tetzlaff et al.
7,119,516	B2	10/2006	Denning
7,124,932	B2	10/2006	Isaacson et al.
7,125,409	B2	10/2006	Truckai et al.
7,128,720	B2	10/2006	Podany
7,131,860	B2	11/2006	Sartor et al.
7,131,970	B2	11/2006	Moses et al.
7,131,983	B2	11/2006	Murakami
7,135,018	B2	11/2006	Ryan et al.
7,135,029	B2	11/2006	Makin et al.
7,135,030	B2	11/2006	Schwemberger et al.
7,137,980	B2	11/2006	Buysse et al.
7,143,925	B2	12/2006	Shelton, IV et al.
7,144,403	B2	12/2006	Booth
7,147,138	B2	12/2006	Shelton, IV
7,153,315	B2	12/2006	Miller
D536,093	S	1/2007	Nakajima et al.
7,156,189	B1	1/2007	Bar-Cohen et al.
7,156,201	B2	1/2007	Peshkovskiy et al.
7,156,846	B2	1/2007	Dycus et al.
7,156,853	B2	1/2007	Muratsu
7,157,058	B2	1/2007	Marhasin et al.
7,159,750	B2	1/2007	Racenet et al.
7,160,259	B2	1/2007	Tardy et al.
7,160,296	B2	1/2007	Pearson et al.
7,160,298	B2	1/2007	Lawes et al.
7,160,299	B2	1/2007	Baily
7,163,548	B2	1/2007	Stulen et al.
7,169,144	B2	1/2007	Hoey et al.
7,169,146	B2	1/2007	Truckai et al.
7,169,156	B2	1/2007	Hart
7,179,254	B2	2/2007	Pendekanti et al.
7,179,271	B2	2/2007	Friedman et al.
7,182,762	B2	2/2007	Bortkiewicz
7,186,253	B2	3/2007	Truckai et al.
7,189,233	B2	3/2007	Truckai et al.
7,195,631	B2	3/2007	Dumbauld
D541,418	S	4/2007	Schechter et al.
7,198,635	B2	4/2007	Danek et al.
7,204,820	B2	4/2007	Akahoshi
7,207,471	B2	4/2007	Heinrich et al.
7,207,997	B2	4/2007	Shipp et al.
7,208,005	B2	4/2007	Frecker et al.
7,210,881	B2	5/2007	Greenberg
7,211,079	B2	5/2007	Treat
7,217,128	B2	5/2007	Atkin et al.
7,217,269	B2	5/2007	El-Galley et al.
7,220,951	B2	5/2007	Truckai et al.
7,223,229	B2	5/2007	Inman et al.
7,225,964	B2	6/2007	Mastri et al.
7,226,448	B2	6/2007	Bertolero et al.
7,229,455	B2	6/2007	Sakurai et al.
7,232,440	B2	6/2007	Dumbauld et al.

(56) **References Cited**

U.S. PATENT DOCUMENTS

7,235,071	B2	6/2007	Gonnering
7,235,073	B2	6/2007	Levine et al.
7,241,294	B2	7/2007	Reschke
7,244,262	B2	7/2007	Wiener et al.
7,251,531	B2	7/2007	Mosher et al.
7,252,667	B2	8/2007	Moses et al.
7,258,688	B1	8/2007	Shah et al.
7,264,618	B2	9/2007	Murakami et al.
7,267,677	B2	9/2007	Johnson et al.
7,267,685	B2	9/2007	Butaric et al.
7,269,873	B2	9/2007	Brewer et al.
7,273,483	B2	9/2007	Wiener et al.
D552,241	S	10/2007	Bromley et al.
7,282,048	B2	10/2007	Goble et al.
7,282,836	B2	10/2007	Kwon et al.
7,285,895	B2	10/2007	Beaupre
7,287,682	B1	10/2007	Ezzat et al.
7,300,431	B2	11/2007	Dubrovsky
7,300,435	B2	11/2007	Wham et al.
7,300,446	B2	11/2007	Beaupre
7,300,450	B2	11/2007	Vleugels et al.
7,303,531	B2	12/2007	Lee et al.
7,303,557	B2	12/2007	Wham et al.
7,306,597	B2	12/2007	Manzo
7,307,313	B2	12/2007	Ohyanagi et al.
7,309,849	B2	12/2007	Truckai et al.
7,311,706	B2	12/2007	Schoenman et al.
7,311,709	B2	12/2007	Truckai et al.
7,317,955	B2	1/2008	McGreevy
7,318,831	B2	1/2008	Alvarez et al.
7,318,832	B2	1/2008	Young et al.
7,326,236	B2	2/2008	Andreas et al.
7,329,257	B2	2/2008	Kanehira et al.
7,331,410	B2	2/2008	Yong et al.
7,335,165	B2	2/2008	Truwit et al.
7,335,997	B2	2/2008	Wiener
7,337,010	B2	2/2008	Howard et al.
7,338,463	B2	3/2008	Vigil
7,353,068	B2	4/2008	Tanaka et al.
7,354,440	B2	4/2008	Truckal et al.
7,357,287	B2	4/2008	Shelton, IV et al.
7,361,172	B2	4/2008	Cimino
7,364,577	B2	4/2008	Wham et al.
7,367,976	B2	5/2008	Lawes et al.
7,371,227	B2	5/2008	Zeiner
RE40,388	E	6/2008	Gines
7,380,695	B2	6/2008	Doll et al.
7,380,696	B2	6/2008	Shelton, IV et al.
7,381,209	B2	6/2008	Truckai et al.
7,384,420	B2	6/2008	Dycus et al.
7,390,317	B2	6/2008	Taylor et al.
7,396,356	B2	7/2008	Mollenauer
7,403,224	B2	7/2008	Fuller et al.
7,404,508	B2	7/2008	Smith et al.
7,407,077	B2	8/2008	Ortiz et al.
7,408,288	B2	8/2008	Hara
7,413,123	B2	8/2008	Ortenzi
7,416,101	B2	8/2008	Shelton, IV et al.
7,416,437	B2	8/2008	Sartor et al.
D576,725	S	9/2008	Shumer et al.
7,419,490	B2	9/2008	Falkenstein et al.
7,422,139	B2	9/2008	Shelton, IV et al.
7,422,463	B2	9/2008	Kuo
D578,643	S	10/2008	Shumer et al.
D578,644	S	10/2008	Shumer et al.
D578,645	S	10/2008	Shumer et al.
7,431,694	B2	10/2008	Stefanchik et al.
7,431,704	B2	10/2008	Babaev
7,435,582	B2	10/2008	Zimmermann et al.
7,441,684	B2	10/2008	Shelton, IV et al.
7,442,168	B2	10/2008	Novak et al.
7,442,193	B2	10/2008	Shields et al.
7,445,621	B2	11/2008	Dumbauld et al.
7,449,004	B2	11/2008	Yamada et al.
7,451,904	B2	11/2008	Shelton, IV
7,455,208	B2	11/2008	Wales et al.
7,455,641	B2	11/2008	Yamada et al.
7,462,181	B2	12/2008	Kraft et al.
7,464,846	B2	12/2008	Shelton, IV et al.
7,472,815	B2	1/2009	Shelton, IV et al.
7,473,253	B2	1/2009	Dycus et al.
7,473,263	B2	1/2009	Johnston et al.
7,479,148	B2	1/2009	Beaupre
7,479,160	B2	1/2009	Branch et al.
7,481,775	B2	1/2009	Weikel, Jr. et al.
7,488,285	B2	2/2009	Honda et al.
7,488,319	B2	2/2009	Yates
7,491,201	B2	2/2009	Shields et al.
7,491,202	B2	2/2009	Odom et al.
7,494,468	B2	2/2009	Rabiner et al.
7,494,501	B2	2/2009	Ahlberg et al.
7,498,080	B2	3/2009	Tung et al.
7,502,234	B2	3/2009	Goliszek et al.
7,503,893	B2	3/2009	Kucklick
7,503,895	B2	3/2009	Rabiner et al.
7,506,790	B2	3/2009	Shelton, IV
7,506,791	B2	3/2009	Omaits et al.
7,510,107	B2	3/2009	Timm et al.
7,510,556	B2	3/2009	Nguyen et al.
7,513,025	B2	4/2009	Fischer
7,517,349	B2	4/2009	Truckai et al.
7,520,865	B2	4/2009	Radley Young et al.
7,524,320	B2	4/2009	Tierney et al.
7,530,986	B2	5/2009	Beaupre et al.
7,533,830	B1	5/2009	Rose
7,534,243	B1	5/2009	Chin et al.
D594,983	S	6/2009	Price et al.
7,540,871	B2	6/2009	Gonnering
7,540,872	B2	6/2009	Schechter et al.
7,543,730	B1	6/2009	Marczyk
7,544,200	B2	6/2009	Houser
7,549,564	B2	6/2009	Boudreaux
7,550,216	B2	6/2009	Ofer et al.
7,553,309	B2	6/2009	Buysse et al.
7,559,450	B2	7/2009	Wales et al.
7,559,452	B2	7/2009	Wales et al.
7,563,259	B2	7/2009	Takahashi
7,563,269	B2	7/2009	Hashiguchi
7,566,318	B2	7/2009	Haefner
7,567,012	B2	7/2009	Namikawa
7,568,603	B2	8/2009	Shelton, IV et al.
7,569,057	B2	8/2009	Liu et al.
7,572,266	B2	8/2009	Young et al.
7,572,268	B2	8/2009	Babaev
7,578,166	B2	8/2009	Ethridge et al.
7,578,820	B2	8/2009	Moore et al.
7,582,084	B2	9/2009	Swanson et al.
7,582,086	B2	9/2009	Privitera et al.
7,582,095	B2	9/2009	Shipp et al.
7,585,181	B2	9/2009	Olsen
7,586,289	B2	9/2009	Andruk et al.
7,587,536	B2	9/2009	McLeod
7,588,176	B2	9/2009	Timm et al.
7,588,177	B2	9/2009	Racenet
7,594,925	B2	9/2009	Danek et al.
7,597,693	B2	10/2009	Garrison
7,601,119	B2	10/2009	Shahinian
7,604,150	B2	10/2009	Boudreaux
7,607,557	B2	10/2009	Shelton, IV et al.
7,608,054	B2	10/2009	Soring et al.
7,617,961	B2	11/2009	Viola
7,621,930	B2	11/2009	Houser
7,625,370	B2	12/2009	Hart et al.
7,627,936	B2	12/2009	Bromfield
7,628,791	B2	12/2009	Garrison et al.
7,628,792	B2	12/2009	Guerra
7,632,267	B2	12/2009	Dahla
7,632,269	B2	12/2009	Truckai et al.
7,637,410	B2	12/2009	Marczyk
7,641,653	B2	1/2010	Dalla Betta et al.
7,641,671	B2	1/2010	Crainich
7,644,848	B2	1/2010	Swayze et al.
7,645,245	B2	1/2010	Sekino et al.
7,645,277	B2	1/2010	McClurken et al.

(56) **References Cited**

U.S. PATENT DOCUMENTS

7,645,278	B2	1/2010	Ichihashi et al.
7,648,499	B2	1/2010	Orszulak et al.
7,654,431	B2	2/2010	Hueil et al.
7,658,311	B2	2/2010	Boudreaux
7,659,833	B2	2/2010	Warner et al.
7,662,151	B2	2/2010	Crompton, Jr. et al.
7,665,647	B2	2/2010	Shelton, IV et al.
7,666,206	B2	2/2010	Taniguchi et al.
7,670,334	B2	3/2010	Hueil et al.
7,670,338	B2	3/2010	Albrecht et al.
7,674,263	B2	3/2010	Ryan
7,678,069	B1	3/2010	Baker et al.
7,678,125	B2	3/2010	Shipp
7,682,366	B2	3/2010	Sakurai et al.
7,686,763	B2	3/2010	Vaezy et al.
7,686,770	B2	3/2010	Cohen
7,686,826	B2	3/2010	Lee et al.
7,688,028	B2	3/2010	Phillips et al.
7,691,095	B2	4/2010	Bednarek et al.
7,691,098	B2	4/2010	Wallace et al.
7,696,670	B2	4/2010	Sakamoto
7,699,846	B2	4/2010	Ryan
7,703,459	B2	4/2010	Saadat et al.
7,703,653	B2	4/2010	Shah et al.
7,708,735	B2	5/2010	Chapman et al.
7,708,751	B2	5/2010	Hughes et al.
7,708,758	B2	5/2010	Lee et al.
7,713,202	B2	5/2010	Boukhny et al.
7,713,267	B2	5/2010	Pozzato
7,714,481	B2	5/2010	Sakai
7,717,312	B2	5/2010	Beetel
7,717,914	B2	5/2010	Kimura
7,717,915	B2	5/2010	Miyazawa
7,721,935	B2	5/2010	Racenet et al.
7,722,527	B2	5/2010	Bouchier et al.
7,722,607	B2	5/2010	Dumbauld et al.
D618,797	S	6/2010	Price et al.
7,726,537	B2	6/2010	Olson et al.
7,727,177	B2	6/2010	Bayat
7,734,476	B2	6/2010	Wildman et al.
7,738,969	B2	6/2010	Bleich
7,740,594	B2	6/2010	Hibner
7,749,240	B2	7/2010	Takahashi et al.
7,749,273	B2	7/2010	Cauthen, III et al.
7,751,115	B2	7/2010	Song
7,753,904	B2	7/2010	Shelton, IV et al.
7,753,908	B2	7/2010	Swanson
7,762,445	B2	7/2010	Heinrich et al.
7,762,979	B2	7/2010	Wuchinich
D621,503	S	8/2010	Otten et al.
7,766,210	B2	8/2010	Shelton, IV et al.
7,766,693	B2	8/2010	Sartor et al.
7,766,910	B2	8/2010	Hixson et al.
7,770,774	B2	8/2010	Mastri et al.
7,770,775	B2	8/2010	Shelton, IV et al.
7,771,425	B2	8/2010	Dycus et al.
7,771,444	B2	8/2010	Patel et al.
7,775,972	B2	8/2010	Brock et al.
7,776,036	B2	8/2010	Schechter et al.
7,776,037	B2	8/2010	Odom
7,778,733	B2	8/2010	Nowlin et al.
7,780,054	B2	8/2010	Wales
7,780,593	B2	8/2010	Ueno et al.
7,780,651	B2	8/2010	Madhani et al.
7,780,659	B2	8/2010	Okada et al.
7,780,663	B2	8/2010	Yates et al.
7,784,662	B2	8/2010	Wales et al.
7,784,663	B2	8/2010	Shelton, IV
7,785,324	B2	8/2010	Eberl
7,789,883	B2	9/2010	Takashino et al.
7,793,814	B2	9/2010	Racenet et al.
7,796,969	B2	9/2010	Kelly et al.
7,798,386	B2	9/2010	Schall et al.
7,799,020	B2	9/2010	Shores et al.
7,799,045	B2	9/2010	Masuda
7,803,152	B2	9/2010	Honda et al.
7,803,156	B2	9/2010	Eder et al.
7,803,168	B2	9/2010	Gifford et al.
7,806,891	B2	10/2010	Nowlin et al.
7,810,693	B2	10/2010	Broehl et al.
7,811,283	B2	10/2010	Moses et al.
7,815,641	B2	10/2010	Dodde et al.
7,815,658	B2	10/2010	Murakami
7,819,298	B2	10/2010	Hall et al.
7,819,299	B2	10/2010	Shelton, IV et al.
7,819,819	B2	10/2010	Quick et al.
7,819,872	B2	10/2010	Johnson et al.
7,821,143	B2	10/2010	Wiener
D627,066	S	11/2010	Romero
7,824,401	B2	11/2010	Manzo et al.
7,828,808	B2	11/2010	Hinman et al.
7,832,408	B2	11/2010	Shelton, IV et al.
7,832,611	B2	11/2010	Boyden et al.
7,832,612	B2	11/2010	Baxter, III et al.
7,834,484	B2	11/2010	Sartor
7,834,521	B2	11/2010	Habu et al.
7,837,699	B2	11/2010	Yamada et al.
7,845,537	B2	12/2010	Shelton, IV et al.
7,846,155	B2	12/2010	Houser et al.
7,846,159	B2	12/2010	Morrison et al.
7,846,160	B2	12/2010	Payne et al.
7,846,161	B2	12/2010	Dumbauld et al.
7,854,735	B2	12/2010	Houser et al.
D631,155	S	1/2011	Peine et al.
7,861,906	B2	1/2011	Doll et al.
7,862,560	B2	1/2011	Marion
7,867,228	B2	1/2011	Nobis et al.
7,871,392	B2	1/2011	Sartor
7,871,423	B2	1/2011	Livneh
7,876,030	B2	1/2011	Taki et al.
D631,965	S	2/2011	Price et al.
7,878,991	B2	2/2011	Babaev
7,879,033	B2	2/2011	Sartor et al.
7,879,035	B2	2/2011	Garrison et al.
7,879,070	B2	2/2011	Ortiz et al.
7,883,465	B2	2/2011	Donofrio et al.
7,883,475	B2	2/2011	Dupont et al.
7,892,606	B2	2/2011	Thies et al.
7,896,875	B2	3/2011	Heim et al.
7,897,792	B2	3/2011	Iikura et al.
7,901,400	B2	3/2011	Wham et al.
7,901,423	B2	3/2011	Stulen et al.
7,905,881	B2	3/2011	Masuda et al.
7,909,220	B2	3/2011	Viola
7,909,824	B2	3/2011	Masuda et al.
7,918,848	B2	4/2011	Lau et al.
7,919,184	B2	4/2011	Mohapatra et al.
7,922,061	B2	4/2011	Shelton, IV et al.
7,922,651	B2	4/2011	Yamada et al.
7,922,716	B2	4/2011	Malecki et al.
7,931,611	B2	4/2011	Novak et al.
7,931,649	B2	4/2011	Couture et al.
D637,288	S	5/2011	Houghton
D638,540	S	5/2011	Ijiri et al.
7,935,114	B2	5/2011	Takashino et al.
7,936,203	B2	5/2011	Zimlich
7,951,095	B2	5/2011	Makin et al.
7,951,165	B2	5/2011	Golden et al.
7,955,331	B2	6/2011	Truckai et al.
7,959,050	B2	6/2011	Smith et al.
7,959,626	B2	6/2011	Hong et al.
7,963,963	B2	6/2011	Francischelli et al.
7,967,602	B2	6/2011	Lindquist
7,972,329	B2	7/2011	Refior et al.
7,976,544	B2	7/2011	McClurken et al.
7,980,443	B2	7/2011	Scheib et al.
7,981,050	B2	7/2011	Ritchart et al.
7,981,113	B2	7/2011	Truckai et al.
7,997,278	B2	8/2011	Utley et al.
7,998,157	B2	8/2011	Culp et al.
8,002,732	B2	8/2011	Visconti
8,006,358	B2	8/2011	Cooke et al.
8,016,843	B2	9/2011	Escaf
8,020,743	B2	9/2011	Shelton, IV

(56) **References Cited**

U.S. PATENT DOCUMENTS

8,025,630	B2	9/2011	Murakami et al.
8,028,885	B2	10/2011	Smith et al.
8,033,173	B2	10/2011	Ehlert et al.
8,038,693	B2	10/2011	Allen
8,048,011	B2	11/2011	Okabe
8,048,070	B2	11/2011	O'Brien et al.
8,052,672	B2	11/2011	Laufer et al.
8,056,720	B2	11/2011	Hawkes
8,057,467	B2	11/2011	Faller et al.
8,057,468	B2	11/2011	Konesky
8,057,498	B2	11/2011	Robertson
8,058,771	B2	11/2011	Giordano et al.
8,061,014	B2	11/2011	Smith et al.
8,066,167	B2	11/2011	Measamer et al.
8,070,036	B1	12/2011	Knodel
8,070,711	B2	12/2011	Bassinger et al.
8,070,762	B2	12/2011	Escudero et al.
8,075,555	B2	12/2011	Truckai et al.
8,075,558	B2	12/2011	Truckai et al.
8,089,197	B2	1/2012	Rinner et al.
8,092,475	B2	1/2012	Cotter et al.
8,097,012	B2	1/2012	Kagarise
8,100,894	B2	1/2012	Mucko et al.
8,105,230	B2	1/2012	Honda et al.
8,105,323	B2	1/2012	Buysse et al.
8,105,324	B2	1/2012	Palanker et al.
8,114,104	B2	2/2012	Young et al.
8,128,624	B2	3/2012	Couture et al.
8,133,218	B2	3/2012	Daw et al.
8,136,712	B2	3/2012	Zingman
8,137,263	B2	3/2012	Marescaux et al.
8,141,762	B2	3/2012	Bedi et al.
8,142,421	B2	3/2012	Cooper et al.
8,142,461	B2	3/2012	Houser et al.
8,147,488	B2	4/2012	Masuda
8,147,508	B2	4/2012	Madan et al.
8,152,801	B2	4/2012	Goldberg et al.
8,152,825	B2	4/2012	Madan et al.
8,157,145	B2	4/2012	Shelton, IV et al.
8,161,977	B2	4/2012	Shelton, IV et al.
8,162,966	B2	4/2012	Connor et al.
8,172,846	B2	5/2012	Brunnett et al.
8,172,870	B2	5/2012	Shipp
8,177,800	B2	5/2012	Spitz et al.
8,182,501	B2	5/2012	Houser et al.
8,182,502	B2	5/2012	Stulen et al.
8,186,560	B2	5/2012	Hess et al.
8,186,877	B2	5/2012	Klimovitch et al.
8,187,267	B2	5/2012	Pappone et al.
D661,801	S	6/2012	Price et al.
D661,802	S	6/2012	Price et al.
D661,803	S	6/2012	Price et al.
D661,804	S	6/2012	Price et al.
8,197,472	B2	6/2012	Lau et al.
8,197,479	B2	6/2012	Olson et al.
8,197,502	B2	6/2012	Smith et al.
8,207,651	B2	6/2012	Gilbert
8,210,411	B2	7/2012	Yates et al.
8,221,306	B2	7/2012	Okada et al.
8,221,415	B2	7/2012	Francischelli
8,226,665	B2	7/2012	Cohen
8,226,675	B2	7/2012	Houser et al.
8,231,607	B2	7/2012	Takuma
8,235,917	B2	8/2012	Joseph et al.
8,236,018	B2	8/2012	Yoshimine et al.
8,236,019	B2	8/2012	Houser
8,236,020	B2	8/2012	Smith et al.
8,241,235	B2	8/2012	Kahler et al.
8,241,271	B2	8/2012	Millman et al.
8,241,282	B2	8/2012	Unger et al.
8,241,283	B2	8/2012	Guerra et al.
8,241,284	B2	8/2012	Dycus et al.
8,241,312	B2	8/2012	Messerly
8,246,575	B2	8/2012	Viola
8,246,615	B2	8/2012	Behnke
8,246,618	B2	8/2012	Bucciaglia et al.
8,246,642	B2	8/2012	Houser et al.
8,251,994	B2	8/2012	McKenna et al.
8,252,012	B2	8/2012	Stulen
8,253,303	B2	8/2012	Giordano et al.
8,257,377	B2	9/2012	Wiener et al.
8,257,387	B2	9/2012	Cunningham
8,262,563	B2	9/2012	Bakos et al.
8,267,300	B2	9/2012	Boudreaux
8,273,087	B2	9/2012	Kimura et al.
D669,992	S	10/2012	Schafer et al.
D669,993	S	10/2012	Merchant et al.
8,277,446	B2	10/2012	Heard
8,277,447	B2	10/2012	Garrison et al.
8,277,471	B2	10/2012	Wiener et al.
8,282,581	B2	10/2012	Zhao et al.
8,282,669	B2	10/2012	Gerber et al.
8,286,846	B2	10/2012	Smith et al.
8,287,485	B2	10/2012	Kimura et al.
8,287,528	B2	10/2012	Wham et al.
8,287,532	B2	10/2012	Carroll et al.
8,292,886	B2	10/2012	Kerr et al.
8,292,888	B2	10/2012	Whitman
8,298,223	B2	10/2012	Wham et al.
8,298,225	B2	10/2012	Gilbert
8,298,232	B2	10/2012	Unger
8,298,233	B2	10/2012	Mueller
8,303,576	B2	11/2012	Brock
8,303,580	B2	11/2012	Wham et al.
8,303,583	B2	11/2012	Hosier et al.
8,303,613	B2	11/2012	Crandall et al.
8,306,629	B2	11/2012	Mioduski et al.
8,308,040	B2	11/2012	Huang et al.
8,319,400	B2	11/2012	Houser et al.
8,323,302	B2	12/2012	Robertson et al.
8,323,310	B2	12/2012	Kingsley
8,328,061	B2	12/2012	Kasvikis
8,328,761	B2	12/2012	Widenhouse et al.
8,328,802	B2	12/2012	Deville et al.
8,328,833	B2	12/2012	Cuny
8,328,834	B2	12/2012	Isaacs et al.
8,333,778	B2	12/2012	Smith et al.
8,333,779	B2	12/2012	Smith et al.
8,334,468	B2	12/2012	Palmer et al.
8,334,635	B2	12/2012	Voegele et al.
8,337,407	B2	12/2012	Quistgaard et al.
8,338,726	B2	12/2012	Palmer et al.
8,343,146	B2	1/2013	Godara et al.
8,344,596	B2	1/2013	Nield et al.
8,348,880	B2	1/2013	Messerly et al.
8,348,967	B2	1/2013	Stulen
8,353,297	B2	1/2013	Dacquay et al.
8,353,847	B2	1/2013	Kuhns et al.
8,357,103	B2	1/2013	Mark et al.
8,357,158	B2	1/2013	McKenna et al.
8,366,727	B2	2/2013	Witt et al.
8,372,064	B2	2/2013	Douglass et al.
8,372,099	B2	2/2013	Deville et al.
8,372,101	B2	2/2013	Smith et al.
8,372,102	B2	2/2013	Stulen et al.
8,374,670	B2	2/2013	Selkee
8,377,044	B2	2/2013	Coe et al.
8,377,059	B2	2/2013	Deville et al.
8,377,085	B2	2/2013	Smith et al.
8,382,748	B2	2/2013	Geisel
8,382,775	B1	2/2013	Bender et al.
8,382,782	B2	2/2013	Robertson et al.
8,382,792	B2	2/2013	Chojin
8,388,646	B2	3/2013	Chojin
8,388,647	B2	3/2013	Nau, Jr. et al.
8,394,096	B2	3/2013	Moses et al.
8,394,115	B2	3/2013	Houser et al.
8,397,971	B2	3/2013	Yates et al.
8,403,926	B2	3/2013	Nobis et al.
8,403,945	B2	3/2013	Whitfield et al.
8,403,948	B2	3/2013	Deville et al.
8,403,949	B2	3/2013	Palmer et al.
8,403,950	B2	3/2013	Palmer et al.
8,409,234	B2	4/2013	Stahler et al.

(56) **References Cited**

U.S. PATENT DOCUMENTS

8,414,577	B2	4/2013	Boudreaux et al.
8,418,073	B2	4/2013	Mohr et al.
8,418,349	B2	4/2013	Smith et al.
8,419,757	B2	4/2013	Smith et al.
8,419,758	B2	4/2013	Smith et al.
8,419,759	B2	4/2013	Dietz
8,423,182	B2	4/2013	Robinson et al.
8,425,161	B2	4/2013	Nagaya et al.
8,425,410	B2	4/2013	Murray et al.
8,425,545	B2	4/2013	Smith et al.
8,430,811	B2	4/2013	Hess et al.
8,430,876	B2	4/2013	Kappus et al.
8,430,897	B2	4/2013	Novak et al.
8,430,898	B2	4/2013	Wiener et al.
8,435,257	B2	5/2013	Smith et al.
8,435,258	B2	5/2013	Young et al.
8,439,912	B2	5/2013	Cunningham et al.
8,439,939	B2	5/2013	Deville et al.
8,444,637	B2	5/2013	Podmore et al.
8,444,662	B2	5/2013	Palmer et al.
8,444,663	B2	5/2013	Houser et al.
8,444,664	B2	5/2013	Balanev et al.
8,453,906	B2	6/2013	Huang et al.
8,454,599	B2	6/2013	Inagaki et al.
8,454,639	B2	6/2013	Du et al.
8,460,288	B2	6/2013	Tamai et al.
8,460,292	B2	6/2013	Truckai et al.
8,460,326	B2	6/2013	Houser et al.
8,461,744	B2	6/2013	Wiener et al.
8,469,981	B2	6/2013	Robertson et al.
8,479,969	B2	7/2013	Shelton, IV
8,480,703	B2	7/2013	Nicholas et al.
8,484,833	B2	7/2013	Cunningham et al.
8,485,413	B2	7/2013	Scheib et al.
8,485,970	B2	7/2013	Widenhouse et al.
8,486,057	B2	7/2013	Behnke, II
8,486,096	B2	7/2013	Robertson et al.
8,491,578	B2	7/2013	Manwaring et al.
8,491,625	B2	7/2013	Horner
8,496,682	B2	7/2013	Guerra et al.
D687,549	S	8/2013	Johnson et al.
8,506,555	B2	8/2013	Ruiz Morales
8,509,318	B2	8/2013	Tailliet
8,512,336	B2	8/2013	Couture
8,512,359	B2	8/2013	Whitman et al.
8,512,364	B2	8/2013	Kowalski et al.
8,512,365	B2	8/2013	Wiener et al.
8,518,067	B2	8/2013	Masuda et al.
8,523,889	B2	9/2013	Stulen et al.
8,528,563	B2	9/2013	Gruber
8,529,437	B2	9/2013	Taylor et al.
8,529,565	B2	9/2013	Masuda et al.
8,531,064	B2	9/2013	Robertson et al.
8,535,311	B2	9/2013	Schall
8,535,340	B2	9/2013	Allen
8,535,341	B2	9/2013	Allen
8,540,128	B2	9/2013	Shelton, IV et al.
8,546,996	B2	10/2013	Messerly et al.
8,546,999	B2	10/2013	Houser et al.
8,551,077	B2	10/2013	Main et al.
8,551,086	B2	10/2013	Kimura et al.
8,562,592	B2	10/2013	Conlon et al.
8,562,598	B2	10/2013	Falkenstein et al.
8,562,604	B2	10/2013	Nishimura
8,568,390	B2	10/2013	Mueller
8,568,400	B2	10/2013	Gilbert
8,568,412	B2	10/2013	Brandt et al.
8,569,997	B2	10/2013	Lee
8,573,461	B2	11/2013	Shelton, IV et al.
8,573,465	B2	11/2013	Shelton, IV
8,574,231	B2	11/2013	Boudreaux et al.
8,574,253	B2	11/2013	Gruber et al.
8,579,176	B2	11/2013	Smith et al.
8,579,897	B2	11/2013	Vakharia et al.
8,579,928	B2	11/2013	Robertson et al.
8,579,937	B2	11/2013	Gresham
8,591,459	B2	11/2013	Clymer et al.
8,591,506	B2	11/2013	Wham et al.
8,591,536	B2	11/2013	Robertson
D695,407	S	12/2013	Price et al.
D696,631	S	12/2013	Price et al.
8,597,193	B2	12/2013	Grunwald et al.
8,602,031	B2	12/2013	Reis et al.
8,602,288	B2	12/2013	Shelton, IV et al.
8,608,745	B2	12/2013	Guzman et al.
8,610,334	B2	12/2013	Bromfield
8,613,383	B2	12/2013	Beckman et al.
8,616,431	B2	12/2013	Timm et al.
8,622,274	B2	1/2014	Yates et al.
8,623,011	B2	1/2014	Spivey
8,623,016	B2	1/2014	Fischer
8,623,027	B2	1/2014	Price et al.
8,623,044	B2	1/2014	Timm et al.
8,628,529	B2	1/2014	Aldridge et al.
8,628,534	B2	1/2014	Jones et al.
8,632,461	B2	1/2014	Glossop
8,636,736	B2	1/2014	Yates et al.
8,638,428	B2	1/2014	Brown
8,640,788	B2	2/2014	Dachs, II et al.
8,641,663	B2	2/2014	Kirschenman et al.
8,647,350	B2	2/2014	Mohan et al.
8,650,728	B2	2/2014	Wan et al.
8,651,230	B2	2/2014	Peshkovsky et al.
8,652,120	B2	2/2014	Giordano et al.
8,652,132	B2	2/2014	Tsuchiya et al.
8,652,155	B2	2/2014	Houser et al.
8,659,208	B1	2/2014	Rose et al.
8,663,220	B2	3/2014	Wiener et al.
8,663,222	B2	3/2014	Anderson et al.
8,663,262	B2	3/2014	Smith et al.
8,668,691	B2	3/2014	Heard
8,668,710	B2	3/2014	Slipszenko et al.
8,684,253	B2	4/2014	Giordano et al.
8,685,016	B2	4/2014	Wham et al.
8,685,020	B2	4/2014	Weizman et al.
8,690,582	B2	4/2014	Rohrbach et al.
8,691,268	B2	4/2014	Weimann
8,695,866	B2	4/2014	Leimbach et al.
8,696,366	B2	4/2014	Chen et al.
8,696,665	B2	4/2014	Hunt et al.
8,702,609	B2	4/2014	Hadjicostis
8,702,704	B2	4/2014	Shelton, IV et al.
8,704,425	B2	4/2014	Giordano et al.
8,708,213	B2	4/2014	Shelton, IV et al.
8,709,031	B2	4/2014	Stulen
8,709,035	B2	4/2014	Johnson et al.
8,715,270	B2	5/2014	Weitzner et al.
8,715,277	B2	5/2014	Weizman
8,715,306	B2	5/2014	Faller et al.
8,721,640	B2	5/2014	Taylor et al.
8,721,657	B2	5/2014	Kondoh et al.
8,734,443	B2	5/2014	Hixson et al.
8,734,476	B2	5/2014	Rhee et al.
8,747,238	B2	6/2014	Shelton, IV et al.
8,747,351	B2	6/2014	Schultz
8,747,404	B2	6/2014	Boudreaux et al.
8,749,116	B2	6/2014	Messerly et al.
8,752,264	B2	6/2014	Ackley et al.
8,752,749	B2	6/2014	Moore et al.
8,753,338	B2	6/2014	Widenhouse et al.
8,754,570	B2	6/2014	Voegele et al.
8,758,342	B2	6/2014	Bales et al.
8,758,352	B2	6/2014	Cooper et al.
8,764,735	B2	7/2014	Coe et al.
8,764,747	B2	7/2014	Cummings et al.
8,767,970	B2	7/2014	Eppolito
8,770,459	B2	7/2014	Racenet et al.
8,771,269	B2	7/2014	Sherman et al.
8,771,270	B2	7/2014	Burbank
8,773,001	B2	7/2014	Wiener et al.
8,777,944	B2	7/2014	Frankhouser et al.
8,779,648	B2	7/2014	Giordano et al.
8,783,541	B2	7/2014	Shelton, IV et al.
8,784,415	B2	7/2014	Malackowski et al.

(56) **References Cited**

U.S. PATENT DOCUMENTS

8,784,418	B2	7/2014	Romero
8,790,342	B2	7/2014	Stulen et al.
8,795,276	B2	8/2014	Dietz et al.
8,795,327	B2	8/2014	Dietz et al.
8,800,838	B2	8/2014	Shelton, IV
8,801,710	B2	8/2014	Ullrich et al.
8,801,752	B2	8/2014	Fortier et al.
8,808,319	B2	8/2014	Houser et al.
8,814,856	B2	8/2014	Elmouelhi et al.
8,814,870	B2	8/2014	Paraschiv et al.
8,820,605	B2	9/2014	Shelton, IV
8,821,388	B2	9/2014	Naito et al.
8,827,992	B2	9/2014	Koss et al.
8,827,995	B2	9/2014	Schaller et al.
8,834,466	B2	9/2014	Cummings et al.
8,834,518	B2	9/2014	Faller et al.
8,844,789	B2	9/2014	Shelton, IV et al.
8,845,537	B2	9/2014	Tanaka et al.
8,845,630	B2	9/2014	Mehta et al.
8,848,808	B2	9/2014	Dress
8,851,354	B2	10/2014	Swensgard et al.
8,852,184	B2	10/2014	Kucklick
8,858,547	B2	10/2014	Brogna
8,862,955	B2	10/2014	Cesari
8,864,709	B2	10/2014	Akagane et al.
8,864,749	B2	10/2014	Okada
8,864,757	B2	10/2014	Klimovitch et al.
8,864,761	B2	10/2014	Johnson et al.
8,870,865	B2	10/2014	Frankhouser et al.
8,870,867	B2	10/2014	Walberg et al.
8,882,766	B2	11/2014	Couture et al.
8,882,791	B2	11/2014	Stulen
8,882,792	B2	11/2014	Dietz et al.
8,888,776	B2	11/2014	Dietz et al.
8,888,783	B2	11/2014	Young
8,888,809	B2	11/2014	Davison et al.
8,899,462	B2	12/2014	Kostrzewski et al.
8,900,259	B2	12/2014	Houser et al.
8,906,016	B2	12/2014	Boudreaux et al.
8,906,017	B2	12/2014	Rioux et al.
8,911,438	B2	12/2014	Swoyer et al.
8,911,460	B2	12/2014	Neurohr et al.
8,920,412	B2	12/2014	Fritz et al.
8,920,414	B2	12/2014	Stone et al.
8,920,421	B2	12/2014	Rupp
8,926,607	B2	1/2015	Norvell et al.
8,926,608	B2	1/2015	Bacher et al.
8,931,682	B2	1/2015	Timm et al.
8,936,614	B2	1/2015	Allen, IV
8,939,974	B2	1/2015	Boudreaux et al.
8,951,248	B2	2/2015	Messerly et al.
8,951,272	B2	2/2015	Robertson et al.
8,956,349	B2	2/2015	Aldridge et al.
8,961,515	B2	2/2015	Twomey et al.
8,961,547	B2	2/2015	Dietz et al.
8,968,283	B2	3/2015	Kharin
8,968,294	B2	3/2015	Maass et al.
8,968,355	B2	3/2015	Malkowski et al.
8,974,447	B2	3/2015	Kimball et al.
8,974,477	B2	3/2015	Yamada
8,974,479	B2	3/2015	Ross et al.
8,979,843	B2	3/2015	Timm et al.
8,979,844	B2	3/2015	White et al.
8,979,890	B2	3/2015	Boudreaux
8,986,287	B2	3/2015	Park et al.
8,986,302	B2	3/2015	Aldridge et al.
8,989,855	B2	3/2015	Murphy et al.
8,989,903	B2	3/2015	Weir et al.
8,991,678	B2	3/2015	Wellman et al.
8,992,422	B2	3/2015	Spivey et al.
8,992,526	B2	3/2015	Brodbeck et al.
9,005,199	B2	4/2015	Beckman et al.
9,011,437	B2	4/2015	Woodruff et al.
9,011,471	B2	4/2015	Timm et al.
9,017,326	B2	4/2015	DiNardo et al.
9,017,355	B2	4/2015	Smith et al.
9,017,372	B2	4/2015	Artale et al.
9,023,071	B2	5/2015	Miller et al.
9,023,072	B2	5/2015	Young et al.
9,028,397	B2	5/2015	Naito
9,028,476	B2	5/2015	Bonn
9,028,494	B2	5/2015	Shelton, IV et al.
9,028,519	B2	5/2015	Yates et al.
9,031,667	B2	5/2015	Williams
9,033,973	B2	5/2015	Krapohl et al.
9,035,741	B2	5/2015	Hamel et al.
9,039,690	B2	5/2015	Kersten et al.
9,039,695	B2	5/2015	Giordano et al.
9,039,705	B2	5/2015	Takashino
9,043,018	B2	5/2015	Mohr
9,044,227	B2	6/2015	Shelton, IV et al.
9,044,243	B2	6/2015	Johnson et al.
9,044,245	B2	6/2015	Condie et al.
9,044,256	B2	6/2015	Cadeddu et al.
9,044,261	B2	6/2015	Houser
9,050,093	B2	6/2015	Aldridge et al.
9,050,098	B2	6/2015	Deville et al.
9,050,124	B2	6/2015	Houser
9,055,961	B2	6/2015	Manzo et al.
9,059,547	B2	6/2015	McLawhorn
9,060,770	B2	6/2015	Shelton, IV et al.
9,060,775	B2	6/2015	Wiener et al.
9,060,776	B2	6/2015	Yates et al.
9,063,049	B2	6/2015	Beach et al.
9,066,723	B2	6/2015	Beller et al.
9,066,747	B2	6/2015	Robertson
9,072,535	B2	7/2015	Shelton, IV et al.
9,072,536	B2	7/2015	Shelton, IV et al.
9,072,539	B2	7/2015	Messerly et al.
9,084,624	B2	7/2015	Larkin et al.
9,084,878	B2	7/2015	Kawaguchi et al.
9,089,327	B2	7/2015	Worrell et al.
9,089,360	B2	7/2015	Messerly et al.
9,095,362	B2	8/2015	Dachs, II et al.
9,095,367	B2	8/2015	Olson et al.
9,101,385	B2	8/2015	Shelton, IV et al.
9,107,684	B2	8/2015	Ma
9,107,689	B2	8/2015	Robertson et al.
9,107,690	B2	8/2015	Bales, Jr. et al.
9,113,900	B2	8/2015	Buysse et al.
9,113,940	B2	8/2015	Twomey
9,114,245	B2	8/2015	Dietz et al.
9,119,657	B2	9/2015	Shelton, IV et al.
9,119,957	B2	9/2015	Gantz et al.
9,125,662	B2	9/2015	Shelton, IV
9,125,667	B2	9/2015	Stone et al.
9,125,722	B2	9/2015	Schwartz
9,147,965	B2	9/2015	Lee
9,149,324	B2	10/2015	Huang et al.
9,149,325	B2	10/2015	Worrell et al.
9,161,803	B2	10/2015	Yates et al.
9,168,054	B2	10/2015	Turner et al.
9,168,055	B2	10/2015	Houser et al.
9,168,085	B2	10/2015	Juzkiw et al.
9,168,089	B2	10/2015	Buysse et al.
9,168,090	B2	10/2015	Strobl et al.
9,173,656	B2	11/2015	Schurr et al.
9,179,912	B2	11/2015	Yates et al.
9,186,199	B2	11/2015	Strauss et al.
9,186,204	B2	11/2015	Nishimura et al.
9,192,380	B2	11/2015	(Tarinelli) Racenet et al.
9,192,431	B2	11/2015	Woodruff et al.
9,198,714	B2	12/2015	Worrell et al.
9,198,715	B2	12/2015	Livneh
9,204,879	B2	12/2015	Shelton, IV
9,204,891	B2	12/2015	Weitzman
9,204,918	B2	12/2015	Germain et al.
9,204,923	B2	12/2015	Manzo et al.
9,216,050	B2	12/2015	Condie et al.
9,216,062	B2	12/2015	Duque et al.
9,220,483	B2	12/2015	Frankhouser et al.
9,220,527	B2	12/2015	Houser et al.
9,220,559	B2	12/2015	Worrell et al.
9,226,750	B2	1/2016	Weir et al.

(56) **References Cited**

U.S. PATENT DOCUMENTS

9,226,751	B2	1/2016	Shelton, IV et al.
9,226,766	B2	1/2016	Aldridge et al.
9,226,767	B2	1/2016	Stulen et al.
9,232,979	B2	1/2016	Parihar et al.
9,237,891	B2	1/2016	Shelton, IV
9,237,921	B2	1/2016	Messerly et al.
9,237,923	B2	1/2016	Worrell et al.
9,241,060	B1	1/2016	Fujisaki
9,241,692	B2	1/2016	Gunday et al.
9,241,728	B2	1/2016	Price et al.
9,241,730	B2	1/2016	Babaev
9,241,731	B2	1/2016	Boudreaux et al.
9,241,768	B2	1/2016	Sandhu et al.
9,247,953	B2	2/2016	Palmer et al.
9,254,165	B2	2/2016	Aronow et al.
9,254,171	B2	2/2016	Trees et al.
9,259,234	B2	2/2016	Robertson et al.
9,259,265	B2	2/2016	Harris et al.
9,265,567	B2	2/2016	Orban et al.
9,265,926	B2	2/2016	Strobl et al.
9,265,973	B2	2/2016	Akagane
9,277,962	B2	3/2016	Koss et al.
9,282,974	B2	3/2016	Shelton, IV
9,283,027	B2	3/2016	Monson et al.
9,283,045	B2	3/2016	Rhee et al.
9,289,256	B2	3/2016	Shelton, IV et al.
9,295,514	B2	3/2016	Shelton, IV et al.
9,301,759	B2	4/2016	Spivey et al.
9,301,772	B2	4/2016	Kimball et al.
9,307,388	B2	4/2016	Liang et al.
9,307,986	B2	4/2016	Hall et al.
9,308,009	B2	4/2016	Madan et al.
9,308,014	B2	4/2016	Fischer
9,314,292	B2	4/2016	Trees et al.
9,314,301	B2	4/2016	Ben-Haim et al.
9,326,754	B2	5/2016	Polster
9,326,787	B2	5/2016	Sanai et al.
9,326,788	B2	5/2016	Batross et al.
9,333,025	B2	5/2016	Monson et al.
9,339,289	B2	5/2016	Robertson
9,339,323	B2	5/2016	Eder et al.
9,339,326	B2	5/2016	McCullagh et al.
9,345,534	B2	5/2016	Artale et al.
9,345,900	B2	5/2016	Wu et al.
9,351,642	B2	5/2016	Nadkarni et al.
9,351,754	B2	5/2016	Vakharia et al.
9,352,173	B2	5/2016	Yamada et al.
9,358,065	B2	6/2016	Ladtkow et al.
9,358,407	B2	6/2016	Akagane
9,364,230	B2	6/2016	Shelton, IV et al.
9,370,400	B2	6/2016	Parihar
9,370,611	B2	6/2016	Ross et al.
9,375,230	B2	6/2016	Ross et al.
9,375,232	B2	6/2016	Hunt et al.
9,375,267	B2	6/2016	Kerr et al.
9,381,058	B2	7/2016	Houser et al.
9,386,983	B2	7/2016	Swensgard et al.
9,393,037	B2	7/2016	Olson et al.
D763,442	S	8/2016	Price et al.
9,402,680	B2	8/2016	Ginnebaugh et al.
9,402,682	B2	8/2016	Worrell et al.
9,408,606	B2	8/2016	Shelton, IV
9,408,622	B2	8/2016	Stulen et al.
9,408,660	B2	8/2016	Strobl et al.
9,414,853	B2	8/2016	Stulen et al.
9,414,880	B2	8/2016	Monson et al.
9,421,060	B2	8/2016	Monson et al.
9,427,249	B2	8/2016	Robertson et al.
9,439,668	B2	9/2016	Timm et al.
9,439,669	B2	9/2016	Wiener et al.
9,439,671	B2	9/2016	Akagane
9,445,784	B2	9/2016	O'Keeffe
9,445,832	B2	9/2016	Wiener et al.
9,445,833	B2	9/2016	Akagane
9,451,967	B2	9/2016	Jordan et al.
9,456,863	B2	10/2016	Moua
9,456,864	B2	10/2016	Witt et al.
9,468,498	B2	10/2016	Sigmon, Jr.
9,474,542	B2	10/2016	Slipszenko et al.
9,486,235	B2	11/2016	Harrington et al.
9,486,236	B2	11/2016	Price et al.
9,492,187	B2	11/2016	Ravikumar et al.
9,492,224	B2	11/2016	Boudreaux et al.
9,498,245	B2	11/2016	Voegele et al.
9,504,483	B2	11/2016	Houser et al.
9,504,524	B2	11/2016	Behnke, II
9,504,855	B2	11/2016	Messerly et al.
9,510,850	B2	12/2016	Robertson et al.
9,510,906	B2	12/2016	Boudreaux et al.
9,522,029	B2	12/2016	Yates et al.
9,526,564	B2	12/2016	Rusin
9,526,565	B2	12/2016	Strobl
9,545,253	B2	1/2017	Worrell et al.
9,545,497	B2	1/2017	Wenderow et al.
9,554,846	B2	1/2017	Boudreaux
9,554,854	B2	1/2017	Yates et al.
9,561,038	B2	2/2017	Shelton, IV et al.
9,574,644	B2	2/2017	Parihar
9,592,072	B2	3/2017	Akagane
9,597,143	B2	3/2017	Madan et al.
9,610,091	B2	4/2017	Johnson et al.
9,610,114	B2	4/2017	Baxter, III et al.
9,615,877	B2	4/2017	Tyrrell et al.
9,622,729	B2	4/2017	Dewaele et al.
9,623,237	B2	4/2017	Turner et al.
9,636,135	B2	5/2017	Stulen
9,638,770	B2	5/2017	Dietz et al.
9,642,644	B2	5/2017	Houser et al.
9,642,669	B2	5/2017	Takashino et al.
9,643,052	B2	5/2017	Tchao et al.
9,649,111	B2	5/2017	Shelton, IV et al.
9,649,126	B2	5/2017	Robertson et al.
9,662,131	B2	5/2017	Omori et al.
9,668,806	B2	6/2017	Unger et al.
9,671,860	B2	6/2017	Ogawa et al.
9,675,374	B2	6/2017	Stulen et al.
9,675,375	B2	6/2017	Houser et al.
9,687,290	B2	6/2017	Keller
9,700,339	B2	7/2017	Nield
9,700,343	B2	7/2017	Messerly et al.
9,707,004	B2	7/2017	Houser et al.
9,707,027	B2	7/2017	Ruddenklau et al.
9,707,030	B2	7/2017	Davison et al.
9,713,507	B2	7/2017	Stulen et al.
9,724,118	B2	8/2017	Schulte et al.
9,724,152	B2	8/2017	Horlle et al.
9,737,326	B2	8/2017	Worrell et al.
9,737,355	B2	8/2017	Yates et al.
9,737,358	B2	8/2017	Beckman et al.
9,737,735	B2	8/2017	Dietz et al.
9,743,947	B2	8/2017	Price et al.
9,757,142	B2	9/2017	Shimizu
9,757,186	B2	9/2017	Boudreaux et al.
9,764,164	B2	9/2017	Wiener et al.
9,782,214	B2	10/2017	Houser et al.
9,788,851	B2	10/2017	Dannaher et al.
9,795,405	B2	10/2017	Price et al.
9,795,436	B2	10/2017	Yates et al.
9,795,808	B2	10/2017	Messerly et al.
9,801,648	B2	10/2017	Houser et al.
9,801,675	B2	10/2017	Sanai et al.
9,808,308	B2	11/2017	Faller et al.
9,814,514	B2	11/2017	Shelton, IV et al.
9,820,768	B2	11/2017	Gee et al.
9,820,771	B2	11/2017	Norton et al.
9,820,806	B2	11/2017	Lee et al.
9,826,976	B2	11/2017	Parihar et al.
9,839,443	B2	12/2017	Brockman et al.
9,839,796	B2	12/2017	Sawada
9,848,901	B2	12/2017	Robertson et al.
9,848,902	B2	12/2017	Price et al.
9,848,937	B2	12/2017	Trees et al.
9,861,428	B2	1/2018	Trees et al.
9,872,725	B2	1/2018	Worrell et al.

(56) **References Cited**

U.S. PATENT DOCUMENTS

9,877,720	B2	1/2018	Worrell et al.
9,877,776	B2	1/2018	Boudreaux
9,883,884	B2	2/2018	Neurohr et al.
9,888,958	B2	2/2018	Evans et al.
9,901,339	B2	2/2018	Farascioni
9,901,359	B2	2/2018	Faller et al.
9,907,563	B2	3/2018	Germain et al.
9,913,655	B2	3/2018	Scheib et al.
9,913,656	B2	3/2018	Stulen
9,913,680	B2	3/2018	Voegele et al.
9,918,736	B2	3/2018	Van Tol et al.
9,925,003	B2	3/2018	Parihar et al.
9,943,325	B2	4/2018	Faller et al.
9,949,785	B2	4/2018	Price et al.
9,949,788	B2	4/2018	Boudreaux
9,962,182	B2	5/2018	Dietz et al.
9,987,033	B2	6/2018	Neurohr et al.
10,010,339	B2	7/2018	Witt et al.
10,010,341	B2	7/2018	Houser et al.
10,016,207	B2	7/2018	Suzuki et al.
10,022,142	B2	7/2018	Aranyi et al.
10,022,567	B2	7/2018	Messerly et al.
10,022,568	B2	7/2018	Messerly et al.
10,028,765	B2	7/2018	Hibner et al.
10,028,786	B2	7/2018	Mucilli et al.
10,034,684	B2	7/2018	Weisenburgh, II et al.
10,034,685	B2	7/2018	Boudreaux et al.
10,034,704	B2	7/2018	Asher et al.
10,039,588	B2	8/2018	Harper et al.
10,045,794	B2	8/2018	Witt et al.
10,045,819	B2	8/2018	Jensen et al.
10,070,916	B2	9/2018	Artale
10,085,762	B2	10/2018	Timm et al.
10,092,310	B2	10/2018	Boudreaux et al.
10,092,344	B2	10/2018	Mohr et al.
10,092,348	B2	10/2018	Boudreaux
10,092,350	B2	10/2018	Rothweiler et al.
10,111,699	B2	10/2018	Boudreaux
10,117,667	B2	11/2018	Robertson et al.
10,117,702	B2	11/2018	Danziger et al.
10,130,410	B2	11/2018	Strobl et al.
10,154,852	B2	12/2018	Conlon et al.
10,159,524	B2	12/2018	Yates et al.
10,166,060	B2	1/2019	Johnson et al.
10,172,669	B2	1/2019	Felder et al.
10,179,022	B2	1/2019	Yates et al.
10,182,837	B2	1/2019	Isola et al.
10,188,385	B2	1/2019	Kerr et al.
10,194,972	B2	2/2019	Yates et al.
10,194,973	B2	2/2019	Wiener et al.
10,194,976	B2	2/2019	Boudreaux
10,194,977	B2	2/2019	Yang
10,201,365	B2	2/2019	Boudreaux et al.
10,201,382	B2	2/2019	Wiener et al.
10,226,273	B2	3/2019	Messerly et al.
10,231,747	B2	3/2019	Stulen et al.
10,245,064	B2	4/2019	Rhee et al.
10,245,065	B2	4/2019	Witt et al.
10,245,095	B2	4/2019	Boudreaux
10,251,664	B2	4/2019	Shelton, IV et al.
10,263,171	B2	4/2019	Wiener et al.
10,265,094	B2	4/2019	Witt et al.
10,265,117	B2	4/2019	Wiener et al.
10,265,118	B2	4/2019	Gerhardt
D847,990	S	5/2019	Kimball
10,278,721	B2	5/2019	Dietz et al.
10,285,723	B2	5/2019	Conlon et al.
10,285,724	B2	5/2019	Faller et al.
10,299,810	B2	5/2019	Robertson et al.
10,299,821	B2	5/2019	Shelton, IV et al.
10,314,638	B2	6/2019	Gee et al.
10,321,950	B2	6/2019	Yates et al.
10,335,182	B2	7/2019	Stulen et al.
10,335,614	B2	7/2019	Messerly et al.
10,342,602	B2	7/2019	Strobl et al.
10,357,303	B2	7/2019	Conlon et al.
10,363,058	B2	7/2019	Roberson et al.
10,368,892	B2	8/2019	Stulen et al.
10,368,894	B2	8/2019	Madan et al.
10,368,957	B2	8/2019	Denzinger et al.
10,398,466	B2	9/2019	Stulen et al.
10,398,497	B2	9/2019	Batross et al.
10,413,352	B2	9/2019	Thomas et al.
10,420,579	B2	9/2019	Wiener et al.
10,420,580	B2	9/2019	Messerly et al.
10,420,607	B2	9/2019	Woloszko et al.
10,426,507	B2	10/2019	Wiener et al.
10,426,978	B2	10/2019	Akagane
10,433,865	B2	10/2019	Witt et al.
10,433,866	B2	10/2019	Witt et al.
10,433,900	B2	10/2019	Harris et al.
10,441,308	B2	10/2019	Robertson
10,441,310	B2	10/2019	Olson et al.
10,441,345	B2	10/2019	Aldridge et al.
10,463,421	B2	11/2019	Boudreaux et al.
10,463,887	B2	11/2019	Witt et al.
10,470,788	B2	11/2019	Sinelnikov
10,512,795	B2	12/2019	Voegele et al.
10,517,627	B2	12/2019	Timm et al.
10,524,854	B2	1/2020	Woodruff et al.
10,531,910	B2	1/2020	Houser et al.
10,537,351	B2	1/2020	Shelton, IV et al.
10,537,352	B2	1/2020	Faller et al.
10,537,667	B2	1/2020	Anim
10,543,008	B2	1/2020	Vakharia et al.
10,555,750	B2	2/2020	Conlon et al.
10,555,769	B2	2/2020	Worrell et al.
10,561,436	B2	2/2020	Asher et al.
10,575,892	B2	3/2020	Danziger et al.
10,595,929	B2	3/2020	Boudreaux et al.
10,595,930	B2	3/2020	Scheib et al.
10,603,064	B2	3/2020	Zhang
10,610,286	B2	4/2020	Wiener et al.
10,624,665	B2	4/2020	Noui et al.
10,624,691	B2	4/2020	Wiener et al.
10,639,092	B2	5/2020	Corbett et al.
10,646,267	B2	5/2020	Ding
10,677,764	B2	6/2020	Ross et al.
10,687,884	B2	6/2020	Wiener et al.
10,709,469	B2	7/2020	Shelton, IV et al.
10,709,906	B2	7/2020	Nield
10,716,615	B2	7/2020	Shelton, IV et al.
10,722,261	B2	7/2020	Houser et al.
10,729,458	B2	8/2020	Stoddard et al.
10,736,649	B2	8/2020	Messerly et al.
10,736,685	B2	8/2020	Wiener et al.
10,751,108	B2	8/2020	Yates et al.
10,758,294	B2	9/2020	Jones
10,779,845	B2	9/2020	Timm et al.
10,779,847	B2	9/2020	Messerly et al.
10,779,848	B2	9/2020	Houser
10,779,849	B2	9/2020	Shelton, IV et al.
10,779,879	B2	9/2020	Yates et al.
10,820,920	B2	11/2020	Scoggins et al.
10,820,938	B2	11/2020	Fischer et al.
10,828,056	B2	11/2020	Messerly et al.
10,828,057	B2	11/2020	Neurohr et al.
10,828,058	B2	11/2020	Shelton, IV et al.
10,828,059	B2	11/2020	Price et al.
10,835,307	B2	11/2020	Shelton, IV et al.
10,835,768	B2	11/2020	Robertson et al.
10,842,522	B2	11/2020	Messerly et al.
10,842,523	B2	11/2020	Shelton, IV et al.
10,842,580	B2	11/2020	Gee et al.
10,856,896	B2	12/2020	Eichmann et al.
10,874,418	B2	12/2020	Houser et al.
10,881,449	B2	1/2021	Boudreaux et al.
10,881,451	B2	1/2021	Worrell et al.
10,888,347	B2	1/2021	Witt et al.
10,893,883	B2	1/2021	Dannaher
10,912,603	B2	2/2021	Boudreaux et al.
10,952,759	B2	3/2021	Messerly et al.
10,959,769	B2	3/2021	Mumaw et al.
10,966,744	B2	4/2021	Rhee et al.

(56) **References Cited**

U.S. PATENT DOCUMENTS

10,987,123 B2 4/2021 Weir et al.
11,000,707 B2 5/2021 Voegele et al.
11,006,971 B2 5/2021 Faller et al.
11,020,140 B2 6/2021 Gee et al.
11,033,292 B2 6/2021 Green et al.
11,033,322 B2 6/2021 Wiener et al.
D924,400 S 7/2021 Kimball
11,051,840 B2 7/2021 Shelton, IV et al.
11,058,447 B2 7/2021 Houser
11,058,448 B2 7/2021 Shelton, IV et al.
11,058,475 B2 7/2021 Wiener et al.
11,129,670 B2 9/2021 Shelton, IV et al.
11,134,978 B2 10/2021 Shelton, IV et al.
11,141,213 B2 10/2021 Yates et al.
11,179,582 B2 11/2021 Voegele et al.
11,229,450 B2 1/2022 Shelton, IV et al.
11,229,471 B2 1/2022 Shelton, IV et al.
11,229,472 B2 1/2022 Shelton, IV et al.
11,253,288 B2 2/2022 Robertson
11,266,433 B2 3/2022 Robertson
11,272,952 B2 3/2022 Messerly et al.
11,324,527 B2 5/2022 Aldridge et al.
11,350,959 B2 6/2022 Messerly et al.
11,369,402 B2 6/2022 Robertson et al.
11,439,426 B2 9/2022 Witt et al.
11,553,954 B2 1/2023 Conlon et al.
11,602,371 B2 3/2023 Gee et al.
11,607,268 B2 3/2023 Houser et al.
11,666,784 B2 6/2023 Wiener et al.
11,690,641 B2 7/2023 Stulen et al.
11,690,643 B2 7/2023 Witt et al.
11,730,507 B2 8/2023 Houser et al.
11,766,276 B2 9/2023 Witt et al.
2001/0011176 A1 8/2001 Boukhny
2001/0025173 A1 9/2001 Ritchie et al.
2001/0025183 A1 9/2001 Shahidi
2001/0025184 A1 9/2001 Messerly
2001/0031950 A1 10/2001 Ryan
2001/0032002 A1 10/2001 McClurken et al.
2001/0039419 A1 11/2001 Francischelli et al.
2002/0002377 A1 1/2002 Cimino
2002/0002378 A1 1/2002 Messerly
2002/0016603 A1 2/2002 Wells
2002/0019649 A1 2/2002 Sikora et al.
2002/0022836 A1 2/2002 Goble et al.
2002/0029055 A1 3/2002 Bonutti
2002/0049551 A1 4/2002 Friedman et al.
2002/0052595 A1 5/2002 Witt et al.
2002/0052617 A1 5/2002 Anis et al.
2002/0077550 A1 6/2002 Rabiner et al.
2002/0099373 A1 7/2002 Schulze et al.
2002/0107446 A1 8/2002 Rabiner et al.
2002/0107517 A1 8/2002 Witt et al.
2002/0120266 A1 8/2002 Truckai et al.
2002/0156466 A1 10/2002 Sakurai et al.
2002/0156493 A1 10/2002 Houser et al.
2002/0165577 A1 11/2002 Witt et al.
2003/0014053 A1 1/2003 Nguyen et al.
2003/0014087 A1 1/2003 Fang et al.
2003/0036705 A1 2/2003 Hare et al.
2003/0040758 A1 2/2003 Wang et al.
2003/0050572 A1 3/2003 Brautigam et al.
2003/0055443 A1 3/2003 Spotnitz
2003/0093113 A1 5/2003 Fogarty et al.
2003/0109875 A1 6/2003 Tetzlaff et al.
2003/0114851 A1 6/2003 Truckai et al.
2003/0114874 A1 6/2003 Craig et al.
2003/0120306 A1 6/2003 Burbank et al.
2003/0130675 A1 7/2003 Kasahara et al.
2003/0130693 A1 7/2003 Levin et al.
2003/0139741 A1 7/2003 Goble et al.
2003/0144652 A1 7/2003 Baker et al.
2003/0144680 A1 7/2003 Kellogg et al.
2003/0158548 A1 8/2003 Phan et al.
2003/0160698 A1 8/2003 Andreasson et al.
2003/0163130 A1* 8/2003 Manna A61B 18/1402 606/50
2003/0171747 A1 9/2003 Kanehira et al.
2003/0195496 A1 10/2003 Maguire et al.
2003/0199794 A1 10/2003 Sakurai et al.
2003/0204199 A1 10/2003 Novak et al.
2003/0212332 A1 11/2003 Fenton et al.
2003/0212363 A1 11/2003 Shipp
2003/0212391 A1 11/2003 Fenton et al.
2003/0212392 A1 11/2003 Fenton et al.
2003/0212422 A1 11/2003 Fenton et al.
2003/0225332 A1 12/2003 Okada et al.
2003/0229344 A1 12/2003 Dycus et al.
2004/0030254 A1 2/2004 Babaev
2004/0030330 A1 2/2004 Brassell et al.
2004/0039242 A1 2/2004 Tolkoff et al.
2004/0047485 A1 3/2004 Sherrit et al.
2004/0054364 A1 3/2004 Aranyi et al.
2004/0064151 A1 4/2004 Mollenauer
2004/0087943 A1 5/2004 Dycus et al.
2004/0092921 A1 5/2004 Kadziauskas et al.
2004/0092992 A1 5/2004 Adams et al.
2004/0097911 A1 5/2004 Murakami et al.
2004/0097912 A1 5/2004 Gonnering
2004/0097919 A1 5/2004 Wellman et al.
2004/0097996 A1 5/2004 Rabiner et al.
2004/0116952 A1 6/2004 Sakurai et al.
2004/0121159 A1 6/2004 Cloud et al.
2004/0122423 A1 6/2004 Dycus et al.
2004/0132383 A1 7/2004 Langford et al.
2004/0138621 A1 7/2004 Jahns et al.
2004/0147934 A1 7/2004 Kiester
2004/0147945 A1 7/2004 Fritzsch
2004/0147946 A1 7/2004 Mastri et al.
2004/0167508 A1 8/2004 Wham et al.
2004/0176686 A1 9/2004 Hare et al.
2004/0176751 A1 9/2004 Weitzner et al.
2004/0193150 A1 9/2004 Sharkey et al.
2004/0199193 A1 10/2004 Hayashi et al.
2004/0199194 A1 10/2004 Witt et al.
2004/0215132 A1 10/2004 Yoon
2004/0243147 A1 12/2004 Lipow
2004/0249374 A1 12/2004 Tetzlaff et al.
2004/0260273 A1 12/2004 Wan
2004/0260300 A1 12/2004 Gorensek et al.
2004/0267298 A1 12/2004 Cimino
2005/0015125 A1 1/2005 Mioduski et al.
2005/0020967 A1 1/2005 Ono
2005/0021018 A1 1/2005 Anderson et al.
2005/0021065 A1 1/2005 Yamada et al.
2005/0021078 A1 1/2005 Vleugels et al.
2005/0033278 A1 2/2005 McClurken et al.
2005/0033337 A1 2/2005 Muir et al.
2005/0049546 A1* 3/2005 Messerly A61B 17/320092 606/169
2005/0070800 A1 3/2005 Takahashi
2005/0085728 A1 4/2005 Fukuda
2005/0090817 A1 4/2005 Phan
2005/0096683 A1 5/2005 Ellins et al.
2005/0099824 A1 5/2005 Dowling et al.
2005/0131390 A1 6/2005 Heinrich et al.
2005/0143759 A1 6/2005 Kelly
2005/0143769 A1 6/2005 White et al.
2005/0149108 A1 7/2005 Cox
2005/0165429 A1 7/2005 Douglas et al.
2005/0171522 A1 8/2005 Christopherson
2005/0177184 A1 8/2005 Easley
2005/0182339 A1 8/2005 Lee et al.
2005/0188743 A1 9/2005 Land
2005/0192610 A1 9/2005 Houser et al.
2005/0192611 A1 9/2005 Houser
2005/0222598 A1 10/2005 Ho et al.
2005/0228425 A1 10/2005 Boukhny et al.
2005/0234484 A1 10/2005 Houser et al.
2005/0249667 A1 11/2005 Tuszynski et al.
2005/0256405 A1 11/2005 Makin et al.
2005/0261588 A1 11/2005 Makin et al.
2005/0267464 A1 12/2005 Truckai et al.
2005/0273090 A1 12/2005 Nieman et al.

(56) **References Cited**

U.S. PATENT DOCUMENTS

2005/0288659 A1 12/2005 Kimura et al.
2006/0025802 A1 2/2006 Sowers
2006/0030797 A1 2/2006 Zhou et al.
2006/0030848 A1 2/2006 Craig et al.
2006/0058825 A1 3/2006 Ogura et al.
2006/0063130 A1 3/2006 Hayman et al.
2006/0064086 A1 3/2006 Odom
2006/0066181 A1 3/2006 Bromfield et al.
2006/0074442 A1 4/2006 Noriega et al.
2006/0079874 A1 4/2006 Faller et al.
2006/0079877 A1 4/2006 Houser et al.
2006/0079879 A1 4/2006 Faller et al.
2006/0095046 A1 5/2006 Trieu et al.
2006/0100652 A1 5/2006 Beaupre
2006/0159731 A1 7/2006 Shoshan
2006/0190034 A1 8/2006 Nishizawa et al.
2006/0206100 A1 9/2006 Eskridge et al.
2006/0206115 A1 9/2006 Schomer et al.
2006/0211943 A1 9/2006 Beaupre
2006/0217729 A1 9/2006 Eskridge et al.
2006/0224160 A1 10/2006 Trieu et al.
2006/0241580 A1 10/2006 Mittelstein et al.
2006/0247558 A1 11/2006 Yamada
2006/0253050 A1 11/2006 Yoshimine et al.
2006/0257819 A1 11/2006 Johnson
2006/0264809 A1 11/2006 Hansmann et al.
2006/0270916 A1 11/2006 Skwarek et al.
2006/0271030 A1 11/2006 Francis et al.
2006/0293656 A1 12/2006 Shadduck et al.
2007/0016235 A1 1/2007 Tanaka et al.
2007/0016236 A1 1/2007 Beaupre
2007/0032704 A1 2/2007 Gandini et al.
2007/0055228 A1 3/2007 Berg et al.
2007/0056596 A1 3/2007 Fanney et al.
2007/0060935 A1 3/2007 Schwardt et al.
2007/0063618 A1 3/2007 Bromfield
2007/0073185 A1 3/2007 Nakao
2007/0073341 A1 3/2007 Smith et al.
2007/0074584 A1 4/2007 Talarico et al.
2007/0106317 A1 5/2007 Shelton et al.
2007/0118115 A1 5/2007 Artale et al.
2007/0130771 A1 6/2007 Ehlert et al.
2007/0149881 A1 6/2007 Rabin
2007/0156163 A1 7/2007 Davison et al.
2007/0166663 A1 7/2007 Telles et al.
2007/0173803 A1 7/2007 Wham et al.
2007/0173813 A1 7/2007 Odom
2007/0173872 A1 7/2007 Neuenfeldt
2007/0185474 A1 8/2007 Nahen
2007/0191712 A1 8/2007 Messerly et al.
2007/0191713 A1 8/2007 Eichmann et al.
2007/0198005 A1 8/2007 Ichihashi et al.
2007/0203483 A1 8/2007 Kim et al.
2007/0208340 A1 9/2007 Ganz et al.
2007/0219481 A1 9/2007 Babaev
2007/0232926 A1 10/2007 Stulen et al.
2007/0232928 A1 10/2007 Wiener et al.
2007/0236213 A1 10/2007 Paden et al.
2007/0239101 A1 10/2007 Kellogg
2007/0249941 A1 10/2007 Salehi et al.
2007/0260242 A1 11/2007 Dycus et al.
2007/0265560 A1 11/2007 Soltani et al.
2007/0265613 A1 11/2007 Edelstein et al.
2007/0265616 A1 11/2007 Couture et al.
2007/0275348 A1 11/2007 Lemon
2007/0276419 A1 11/2007 Rosenthal
2007/0282333 A1 12/2007 Fortson et al.
2007/0287933 A1 12/2007 Phan et al.
2007/0288055 A1 12/2007 Lee
2008/0013809 A1 1/2008 Zhu et al.
2008/0015575 A1 1/2008 Odom et al.
2008/0033465 A1 2/2008 Schmitz et al.
2008/0039746 A1 2/2008 Hissong et al.
2008/0051812 A1 2/2008 Schmitz et al.
2008/0058775 A1 3/2008 Darian et al.
2008/0058845 A1 3/2008 Shimizu et al.
2008/0071269 A1 3/2008 Hilario et al.
2008/0077145 A1 3/2008 Boyden et al.
2008/0082039 A1 4/2008 Babaev
2008/0082098 A1 4/2008 Tanaka et al.
2008/0097281 A1 4/2008 Zusman et al.
2008/0097501 A1 4/2008 Blier
2008/0114355 A1 5/2008 Whayne et al.
2008/0114364 A1 5/2008 Goldin et al.
2008/0125768 A1 5/2008 Tahara et al.
2008/0147058 A1 6/2008 Horrell et al.
2008/0147062 A1 6/2008 Truckai et al.
2008/0147092 A1 6/2008 Rogge et al.
2008/0171938 A1 7/2008 Masuda et al.
2008/0177268 A1 7/2008 Daum et al.
2008/0188755 A1 8/2008 Hart
2008/0200940 A1 8/2008 Eichmann et al.
2008/0208108 A1 8/2008 Kimura
2008/0208231 A1 8/2008 Ota et al.
2008/0214967 A1 9/2008 Aranyi et al.
2008/0234709 A1 9/2008 Houser
2008/0234710 A1* 9/2008 Neurohr A61B 17/320068 606/169
2008/0243162 A1 10/2008 Shibata et al.
2008/0281200 A1 11/2008 Voic et al.
2008/0281315 A1 11/2008 Gines
2008/0287948 A1 11/2008 Newton et al.
2008/0294051 A1 11/2008 Koshigoe et al.
2008/0296346 A1 12/2008 Shelton, IV et al.
2008/0300588 A1 12/2008 Groth et al.
2009/0012516 A1 1/2009 Curtis et al.
2009/0023985 A1 1/2009 Ewers
2009/0043228 A1 2/2009 Northrop et al.
2009/0048537 A1 2/2009 Lydon et al.
2009/0048589 A1 2/2009 Takashino et al.
2009/0054886 A1 2/2009 Yachi et al.
2009/0054889 A1 2/2009 Newton et al.
2009/0054894 A1 2/2009 Yachi
2009/0069830 A1 3/2009 Mulvihill et al.
2009/0076506 A1 3/2009 Baker
2009/0082716 A1 3/2009 Akahoshi
2009/0082766 A1 3/2009 Unger et al.
2009/0088785 A1 4/2009 Masuda
2009/0118751 A1 5/2009 Wiener et al.
2009/0143678 A1 6/2009 Keast et al.
2009/0143799 A1 6/2009 Smith et al.
2009/0143800 A1 6/2009 Deville et al.
2009/0163807 A1 6/2009 Sliwa
2009/0182322 A1 7/2009 D'Amelio et al.
2009/0182331 A1 7/2009 D'Amelio et al.
2009/0182332 A1 7/2009 Long et al.
2009/0216157 A1 8/2009 Yamada
2009/0223033 A1 9/2009 Houser
2009/0248021 A1 10/2009 McKenna
2009/0254077 A1 10/2009 Craig
2009/0254080 A1 10/2009 Honda
2009/0259149 A1 10/2009 Tahara et al.
2009/0264909 A1 10/2009 Beaupre
2009/0270771 A1 10/2009 Takahashi
2009/0270812 A1 10/2009 Litscher et al.
2009/0270853 A1 10/2009 Yachi et al.
2009/0270891 A1 10/2009 Beaupre
2009/0270899 A1 10/2009 Carusillo et al.
2009/0287205 A1 11/2009 Ingle
2009/0299141 A1 12/2009 Downey et al.
2009/0327715 A1 12/2009 Smith et al.
2010/0004508 A1 1/2010 Naito et al.
2010/0022825 A1 1/2010 Yoshie
2010/0030233 A1 2/2010 Whitman et al.
2010/0034605 A1 2/2010 Huckins et al.
2010/0036370 A1 2/2010 Mirel et al.
2010/0042126 A1 2/2010 Houser et al.
2010/0049180 A1 2/2010 Wells et al.
2010/0057118 A1 3/2010 Dietz et al.
2010/0063525 A1 3/2010 Beaupre et al.
2010/0063528 A1 3/2010 Beaupre
2010/0081863 A1 4/2010 Hess et al.
2010/0081864 A1 4/2010 Hess et al.
2010/0081883 A1 4/2010 Murray et al.

(56) **References Cited**

U.S. PATENT DOCUMENTS

2010/0094323 A1 4/2010 Isaacs et al.
2010/0106173 A1 4/2010 Yoshimine
2010/0109480 A1 5/2010 Forslund et al.
2010/0158307 A1 6/2010 Kubota et al.
2010/0168741 A1 7/2010 Sanai et al.
2010/0181966 A1 7/2010 Sakakibara
2010/0187283 A1 7/2010 Crainich et al.
2010/0204721 A1 8/2010 Young et al.
2010/0222714 A1 9/2010 Muir et al.
2010/0222752 A1 9/2010 Collins, Jr. et al.
2010/0228191 A1 9/2010 Alvarez et al.
2010/0234906 A1 9/2010 Koh
2010/0274160 A1 10/2010 Yachi et al.
2010/0274278 A1 10/2010 Fleenor et al.
2010/0280368 A1 11/2010 Can et al.
2010/0298743 A1 11/2010 Nield et al.
2010/0312186 A1 12/2010 Suchdev et al.
2010/0331742 A1 12/2010 Masuda
2010/0331873 A1 12/2010 Dannaher et al.
2011/0004233 A1 1/2011 Muir et al.
2011/0028964 A1 2/2011 Edwards
2011/0106141 A1 5/2011 Nakamura
2011/0125151 A1 5/2011 Strauss et al.
2011/0278343 A1 11/2011 Knodel et al.
2011/0284014 A1 11/2011 Cadeddu et al.
2011/0290856 A1 12/2011 Shelton, IV et al.
2011/0291526 A1 12/2011 Abramovich et al.
2011/0295295 A1 12/2011 Shelton, IV et al.
2011/0306967 A1 12/2011 Payne et al.
2011/0313415 A1 12/2011 Fernandez et al.
2012/0004655 A1 1/2012 Kim et al.
2012/0016413 A1 1/2012 Timm et al.
2012/0022519 A1 1/2012 Huang et al.
2012/0022526 A1 1/2012 Aldridge et al.
2012/0022583 A1 1/2012 Sugalski et al.
2012/0041358 A1 2/2012 Mann et al.
2012/0059289 A1 3/2012 Nield et al.
2012/0071863 A1 3/2012 Lee et al.
2012/0078244 A1 3/2012 Worrell et al.
2012/0078249 A1 3/2012 Eichmann et al.
2012/0101495 A1 4/2012 Young et al.
2012/0109186 A1 5/2012 Parrott et al.
2012/0116222 A1 5/2012 Sawada et al.
2012/0116265 A1 5/2012 Houser et al.
2012/0116363 A1 5/2012 Houser et al.
2012/0136279 A1 5/2012 Tanaka et al.
2012/0143211 A1 6/2012 Kishi
2012/0172904 A1 7/2012 Muir et al.
2012/0265241 A1 10/2012 Hart et al.
2012/0296371 A1 11/2012 Kappus et al.
2012/0330338 A1 12/2012 Messerly
2013/0023925 A1 1/2013 Mueller
2013/0072948 A1 3/2013 States, III et al.
2013/0090576 A1 4/2013 Stulen et al.
2013/0116717 A1 5/2013 Balek et al.
2013/0123776 A1 5/2013 Monson et al.
2013/0158659 A1 6/2013 Bergs et al.
2013/0158660 A1 6/2013 Bergs et al.
2013/0165929 A1 6/2013 Muir et al.
2013/0197511 A1 8/2013 Balanev et al.
2013/0231691 A1 9/2013 Houser
2013/0253256 A1 9/2013 Griffith et al.
2013/0277410 A1 10/2013 Fernandez et al.
2013/0296843 A1 11/2013 Boudreaux et al.
2013/0331873 A1 12/2013 Ross et al.
2014/0001231 A1 1/2014 Shelton, IV et al.
2014/0001234 A1 1/2014 Shelton, IV et al.
2014/0005640 A1 1/2014 Shelton, IV et al.
2014/0005678 A1 1/2014 Shelton, IV et al.
2014/0005702 A1 1/2014 Timm et al.
2014/0005705 A1 1/2014 Weir et al.
2014/0005718 A1 1/2014 Shelton, IV et al.
2014/0014544 A1 1/2014 Bugnard et al.
2014/0081299 A1 3/2014 Dietz et al.
2014/0121569 A1 5/2014 Schafer et al.
2014/0135663 A1 5/2014 Funakubo et al.
2014/0135804 A1 5/2014 Weisenburgh, II et al.
2014/0194874 A1 7/2014 Dietz et al.
2014/0194875 A1 7/2014 Reschke et al.
2014/0207135 A1 7/2014 Winter
2014/0207163 A1 7/2014 Eichmann et al.
2014/0276963 A1 9/2014 Ranucci et al.
2014/0323926 A1 10/2014 Akagane
2014/0371735 A1 12/2014 Long
2015/0011889 A1 1/2015 Lee
2015/0080876 A1 3/2015 Worrell et al.
2015/0083774 A1 3/2015 Measamer et al.
2015/0112335 A1 4/2015 Boudreaux et al.
2015/0157356 A1 6/2015 Gee
2015/0164533 A1 6/2015 Felder et al.
2015/0164534 A1 6/2015 Felder et al.
2015/0164535 A1 6/2015 Felder et al.
2015/0164536 A1 6/2015 Czarnecki et al.
2015/0164537 A1 6/2015 Cagle et al.
2015/0165240 A1 6/2015 Stoddard et al.
2015/0272659 A1 10/2015 Boudreaux et al.
2015/0289854 A1 10/2015 Cho et al.
2016/0045248 A1 2/2016 Unger et al.
2016/0051316 A1 2/2016 Boudreaux
2016/0114355 A1 4/2016 Sakai et al.
2016/0128769 A1 5/2016 Rontal et al.
2016/0175029 A1 6/2016 Witt et al.
2016/0206342 A1 7/2016 Robertson et al.
2016/0240768 A1 8/2016 Fujii et al.
2016/0262786 A1 9/2016 Madan et al.
2016/0270842 A1 9/2016 Strobl et al.
2016/0296251 A1 10/2016 Olson et al.
2016/0296252 A1 10/2016 Olson et al.
2016/0296270 A1 10/2016 Strobl et al.
2017/0027624 A1 2/2017 Wilson et al.
2017/0036044 A1 2/2017 Ito
2017/0086909 A1 3/2017 Yates et al.
2017/0119426 A1 5/2017 Akagane
2017/0135751 A1 5/2017 Rothweiler et al.
2017/0164972 A1 6/2017 Johnson et al.
2017/0189095 A1 7/2017 Danziger et al.
2017/0202595 A1 7/2017 Shelton, IV
2017/0205234 A1 7/2017 Honda
2018/0125523 A1 5/2018 Johnson
2019/0350615 A1 11/2019 Messerly et al.
2020/0015798 A1 1/2020 Wiener et al.
2020/0085466 A1 3/2020 Faller et al.
2020/0323551 A1 10/2020 Faller et al.
2021/0038248 A1 2/2021 Houser
2021/0128191 A1 5/2021 Messerly et al.
2021/0236157 A1 8/2021 Rhee et al.
2021/0315605 A1 10/2021 Gee et al.
2021/0378700 A1 12/2021 Houser
2022/0346824 A1 11/2022 Messerly et al.
2023/0191161 A1 6/2023 Wiener et al.

FOREIGN PATENT DOCUMENTS

CA 2214413 A1 9/1996
CN 2460047 Y 11/2001
CN 1634601 A 7/2005
CN 1775323 A 5/2006
CN 1922563 A 2/2007
CN 2868227 Y 2/2007
CN 101766869 A 7/2010
CN 202027624 U 11/2011
CN 102335778 A 2/2012
CN 103668171 A 3/2014
CN 103921215 A 7/2014
CN 106077718 A 11/2016
DE 2065681 A1 3/1975
DE 3904558 A1 8/1990
DE 9210327 U1 11/1992
DE 4300307 A1 7/1994
DE 4434938 C1 2/1996
DE 29623113 U1 10/1997
DE 20004812 U1 9/2000

(56) **References Cited**

FOREIGN PATENT DOCUMENTS

DE	20021619	U1	3/2001
DE	10042606	A1	8/2001
DE	10201569	A1	7/2003
EP	0171967	A2	2/1986
EP	0336742	A2	10/1989
EP	0136855	B1	11/1989
EP	0705571	A1	4/1996
EP	1543854	A1	6/2005
EP	1698289	A2	9/2006
EP	1862133	A1	12/2007
EP	1972264	A1	9/2008
EP	2060238	A1	5/2009
EP	1747761	B1	10/2009
EP	2131760	A1	12/2009
EP	1214913	B1	7/2010
EP	1946708	B1	6/2011
EP	1767164	B1	1/2013
EP	2578172	A2	4/2013
EP	2510891	B1	6/2016
FR	2454351	A1	11/1980
FR	2964554	A1	3/2012
GB	2032221	A	4/1980
GB	2317566	A	4/1998
GB	2318298	A	4/1998
GB	2425480	A	11/2006
JP	S50100891	A	8/1975
JP	S5968513	U	5/1984
JP	S59141938	A	8/1984
JP	S62213746	A	9/1987
JP	S62221343	A	9/1987
JP	S62227343	A	10/1987
JP	S62292153	A	12/1987
JP	S62292154	A	12/1987
JP	S63109386	A	5/1988
JP	S63315049	A	12/1988
JP	H01151452	A	6/1989
JP	H01198540	A	8/1989
JP	H0271510	U	5/1990
JP	H02286149	A	11/1990
JP	H02292193	A	12/1990
JP	H0337061	A	2/1991
JP	H0425707	U	2/1992
JP	H0464351	A	2/1992
JP	H0430508	U	3/1992
JP	H04152942	A	5/1992
JP	H04161078	A	6/1992
JP	H0595955	A	4/1993
JP	H05115490	A	5/1993
JP	H0647048	A	2/1994
JP	H0670938	A	3/1994
JP	H06104503	A	4/1994
JP	H07185457	A	7/1995
JP	H07299415	A	11/1995
JP	H0824266	A	1/1996
JP	H08229050	A	9/1996
JP	H08275950	A	10/1996
JP	H08275951	A	10/1996
JP	H08299351	A	11/1996
JP	H08336545	A	12/1996
JP	H09135553	A	5/1997
JP	H09140722	A	6/1997
JP	H105236	A	1/1998
JP	H105237	A	1/1998
JP	H10295700	A	11/1998
JP	H11128238	A	5/1999
JP	2000139943	A	5/2000
JP	2000210296	A	8/2000
JP	2000210299	A	8/2000
JP	2000271145	A	10/2000
JP	2000287987	A	10/2000
JP	2000312682	A	11/2000
JP	2001029353	A	2/2001
JP	2001057985	A	3/2001
JP	2001170066	A	6/2001
JP	2001198137	A	7/2001
JP	2002035002	A	2/2002
JP	2002186901	A	7/2002
JP	2002233533	A	8/2002
JP	2002263579	A	9/2002
JP	2002330977	A	11/2002
JP	2003000612	A	1/2003
JP	2003010201	A	1/2003
JP	2003116870	A	4/2003
JP	2003126104	A	5/2003
JP	2003126110	A	5/2003
JP	2003153919	A	5/2003
JP	2003230567	A	8/2003
JP	2003339730	A	12/2003
JP	2004129871	A	4/2004
JP	2004147701	A	5/2004
JP	2004209043	A	7/2004
JP	2005027026	A	1/2005
JP	2005074088	A	3/2005
JP	2005094552	A	4/2005
JP	2005253674	A	9/2005
JP	2006217716	A	8/2006
JP	2006288431	A	10/2006
JP	3841627	B2	11/2006
JP	2007177931	A	7/2007
JP	D1339835	S	8/2008
JP	2009071439	A	4/2009
JP	2009082904	A	4/2009
JP	2009297352	A	12/2009
JP	2010009686	A	1/2010
JP	2010121865	A	6/2010
JP	2011160586	A	8/2011
JP	2012235658	A	11/2012
JP	2014121340	A	7/2014
JP	2015529140	A	10/2015
JP	2016022136	A	2/2016
KR	100789356	B1	12/2007
RU	2154437	C1	8/2000
RU	22035	U1	3/2002
RU	2201169	C2	3/2003
RU	2405603	C1	12/2010
SU	850068	A1	7/1981
WO	WO-8103272	A1	11/1981
WO	WO-9308757	A1	5/1993
WO	WO-9314708	A1	8/1993
WO	WO-9421183	A1	9/1994
WO	WO-9424949	A1	11/1994
WO	WO-9639086	A1	12/1996
WO	WO-9800069	A1	1/1998
WO	WO-9805437	A1	2/1998
WO	WO-9816157	A1	4/1998
WO	WO-9920213	A1	4/1999
WO	WO-9923960	A1	5/1999
WO	WO-0024322	A1	5/2000
WO	WO-0024330	A1	5/2000
WO	WO-0064358	A2	11/2000
WO	WO-0128444	A1	4/2001
WO	WO-0132087	A1	5/2001
WO	WO-0167970	A1	9/2001
WO	WO-0170112	A1	9/2001
WO	WO-0195810	A2	12/2001
WO	WO-02076685	A1	10/2002
WO	WO-02080799	A1	10/2002
WO	WO-2004037095	A2	5/2004
WO	WO-2004078051	A2	9/2004
WO	WO-2004098426	A1	11/2004
WO	WO-2005084250	A2	9/2005
WO	WO-2007008710	A2	1/2007
WO	WO-2008118709	A1	10/2008
WO	WO-2008130793	A1	10/2008
WO	WO-2008154338	A1	12/2008
WO	WO-2010104755	A1	9/2010
WO	WO-2011008672	A2	1/2011
WO	WO-2011052939	A2	5/2011
WO	WO-2011060031	A1	5/2011
WO	WO-2012044606	A2	4/2012

(56) **References Cited**

FOREIGN PATENT DOCUMENTS

WO WO-2012066983 A1 5/2012
WO WO-2013048963 A2 4/2013

OTHER PUBLICATIONS

AST Products, Inc., "Principles of Video Contact Angle Analysis," 20 pages, (2006).
Campbell et al., "Thermal Imaging in Surgery," p. 19-3, in Medical Infrared Imaging, N. A. Diakides and J. D. Bronzino, Eds. (2008).
Chen et al., "Heat-Induced Changes in the Mechanics of a Collagenous Tissue: Isothermal Free Shrinkage," Transactions of the ASME, vol. 119, pp. 372-378 (Nov. 1997).
Chen et al., "Heat-Induced Changes in the Mechanics of a Collagenous Tissue: Isothermal, Isotonic Shrinkage," Transactions of the ASME, vol. 120, pp. 382-388 (Jun. 1998).
Chen et al., "Heat-induced changes in the mechanics of a collagenous tissue: pseudoelastic behavior at 37° C," Journal of Biomechanics, 31, pp. 211-216 (1998).
Chen et al., "Phenomenological Evolution Equations for Heat-Induced Shrinkage of a Collagenous Tissue," IEEE Transactions on Biomedical Engineering, vol. 45, No. 10, pp. 1234-1240 (Oct. 1998).
Covidien 501(k) Summary Sonicision, dated Feb. 24, 2011 (7 pages).
Covidien Brochure, [Value Analysis Brief], LigaSure Advance™ Pistol Grip, dated Rev. Apr. 2010 (7 pages).
Covidien Brochure, LigaSure Atlas™ Hand Switching Instruments, dated Dec. 2008 (2 pages).
Covidien Brochure, LigaSure Impact™ Instrument LF4318, dated Feb. 2013 (3 pages).
Covidien Brochure, The LigaSure Precise™ Instrument, dated Mar. 2011 (2 pages).
Covidien Brochure, The LigaSure™ 5 mm Blunt Tip Sealer/Divider Family, dated Apr. 2013 (2 pages).
Douglas, S.C. "Introduction to Adaptive Filter". Digital Signal Processing Handbook. Ed. Vijay K. Madisetti and Douglas B. Williams. Boca Raton: CRC Press LLC, 1999.
Emam, Tarek A et al., "How Safe is High-Power Ultrasonic Dissection?," Annals of Surgery, (2003), pp. 186-191, vol. 237, No. 2, Lippincott Williams & Wilkins, Inc., Philadelphia, PA.
Erbe Electrosurgery VIO® 200 S, (2012), p. 7, 12 pages, accessed Mar. 31, 2014 at http://www.erbe-med.com/erbe/media/Marketing materialien/85140170 ERBE EN VIO 200 S D027541.
F. A. Duck, "Optical Properties of Tissue Including Ultraviolet and Infrared Radiation," pp. 43-71 in Physical Properties of Tissue (1990).
Feil, Wolfgang, M.D., et al., "Ultrasonic Energy for Cutting, Coagulating, and Dissecting," (2005), pp. IV, 17, 21, and 23; ISBN 3-13-127521-9 (New York, NY, Thieme, New York).
Fowler, K.R., "A Programmable, Arbitrary Waveform Electrosurgical Device," IEEE Engineering in Medicine and Biology Society 10th Annual International Conference, pp. 1324, 1325 (1988).
Gerhard, Glen C., "Surgical Electrotechnology: Quo Vadis?," IEEE Transactions on Biomedical Engineering, vol. BME-31, No. 12, pp. 787-792, Dec. 1984.
Gibson, "Magnetic Refrigerator Successfully Tested," U.S. Department of Energy Research News, accessed online on Aug. 6, 2010 at http://www.eurekalert.org/features/doe/2001-11/dl-mrs062802.php (Nov. 1, 2001).
Glaser and Subak-Sharpe, Integrated Circuit Engineering, Addison-Wesley Publishing, Reading, MA (1979). (book--not attached).
Gooch et al., "Recommended Infection-Control Practices for Dentistry, 1993," Published: May 28, 1993; [retrieved on Aug. 23, 2008]. Retrieved from the internet: URL: http//wonder.cdc.gov/wonder/prevguid/p0000191/p0000191.asp (15 pages).
Graff, K.F., "Elastic Wave Propagation in a Curved Sonic Transmission Line," IEEE Transactions on Sonics and Ultrasonics, SU-17(1), 1-6 (1970).
Harris et al., "Altered Mechanical Behavior of Epicardium Due to Isothermal Heating Under Biaxial Isotonic Loads," Journal of Biomechanical Engineering, vol. 125, pp. 381-388 (Jun. 2003).
Harris et al., "Kinetics of Thermal Damage to a Collagenous Membrane Under Biaxial Isotonic Loading," IEEE Transactions on Biomedical Engineering, vol. 51, No. 2, pp. 371-379 (Feb. 2004).
Hayashi et al., "The Effect of Thermal Heating on the Length and Histologic Properties of the Glenohumeral Joint Capsule," American Journal of Sports Medicine, vol. 25, Issue 1, 11 pages (Jan. 1997), URL: http://www.mdconsult.com/das/article/body/156183648- 2/jorg=journal&source=MI&sp=1 . . . , accessed Aug. 25, 2009.
Henriques. F.C., "Studies in thermal injury V. The predictability and the significance of thermally induced rate processes leading to irreversible epidermal injury." Archives of Pathology, 434, pp. 489-502 (1947).
http://www.4-traders.com/JOHNSON-JOHNSON-4832/news/Johnson-Johnson-Ethicon-E . . . .
http://www.apicalinstr.com/generators.htm.
http://www.dotmed.com/listing/electrosurical-unit/ethicon/ultracision-g110-/1466724.
http://www.medicalexpo.com/medical-manufacturer/electrosurgical-generator-6951.html.
http://www.megadyne.com/es_generator.php.
http://www.valleylab.com/product/es/generators/index.html.
http:/www.ethicon.com/gb-en/healthcare-professionals/products/energy-devices/capital//ge . . . .
https://www.kjmagnetics.com/fieldcalculator.asp, retrieved Jul. 11, 2016, backdated to Nov. 11, 2011 via https://web.archive.org/web/20111116164447/http://www.kjmagnetics.com/fieldcalculator.asp.
Humphrey, J.D., "Continuum Thermomechanics and the Clinical Treatment of Disease and Injury," Appl. Mech. Rev., vol. 56, No. 2 pp. 231-260 (Mar. 2003).
Huston et al., "Magnetic and Magnetostrictive Properties of Cube Textured Nickel for Magnetostrictive Transducer Applications," IEEE Transactions on Magnetics, vol. 9(4), pp. 636-640 (Dec. 1973).
Incropera et al., Fundamentals of Heat and Mass Transfer, Wiley, New York (1990). (Book--not attached).
Jang, J. et al. "Neuro-fuzzy and Soft Computing." Prentice Hall, 1997, pp. 13-89, 199-293, 335-393, 453-496, 535-549.
Kurt Gieck & Reiner Gieck, *Engineering Formulas* § Z.7 (7th ed. 1997).
LaCourse, J.R.; Vogt, M.C.; Miller, W.T., III; Selikowitz, S.M., "Spectral Analysis Interpretation of Electrosurgical Generator Nerve and Muscle Stimulation," IEEE Transactions on Biomedical Engineering, vol. 35, No. 7, pp. 505-509, Jul. 1988.
Lee et al., "A multi-sample denaturation temperature tester for collagenous biomaterials," Med. Eng. Phy., vol. 17, No. 2, pp. 115-121 (Mar. 1995).
Leonard I. Malis, M.D., "The Value of Irrigation During Bipolar Coagulation," 1989.
Lim et al., "A Review of Mechanism Used in Laparoscopic Surgical Instruments," Mechanism and Machine Theory, vol. 38, pp. 1133-1147, (2003).
Makarov, S. N., Ochmann, M., Desinger, K., "The longitudinal vibration response of a curved fiber used for laser ultrasound surgical therapy," Journal of the Acoustical Society of America 102, 1191-1199 (1997).
McCarus, Steven D. M.D., "Physiologic Mechanism of the Ultrasonically Activated Scalpel," The Journal of the American Association of Gynecologic Laparoscopists; (Aug. 1996), vol. 3, No. 4., pp. 601-606 and 608.
Mitsui Chemicals Names DuPont™ Vespel® Business as Exclusive U.S., European Distributor of AUTUM® Thermoplastic Polyimide Resin, Feb. 24, 2003; http://www2.dupont.com/Vespel/en_US/news_events/article20030224.html.
Moran et al., "Thermally Induced Shrinkage of Joint Capsule," Clinical Orthopaedics and Related Research, No. 281, pp. 248-255 (Dec. 2000).
Morley, L. S. D., "Elastic Waves in a Naturally Curved Rod," Quarterly Journal of Mechanics and Applied Mathematics, 14: 155-172 (1961).

(56) **References Cited**

OTHER PUBLICATIONS

National Semiconductors Temperature Sensor Handbook—http://www.national.com/appinfo/tempsensors/files/temphb.pdf; accessed online: Apr. 1, 2011.
Orr et al., "Overview of Bioheat Transfer," pp. 367-384 in Optical-Thermal Response of Laser-Irradiated Tissue, A. J. Welch and M. J. C. van Gemert, eds., Plenum, New York (1995).
Sadiq Muhammad et al: "High-performance planar ultrasonic tool based on d31-mode piezocrystal", IEEE Transactions on Ultrasonics, Ferroelectrics and Frequency Control, IEEE, US, vol. 62, No. 3, Mar. 30, 2015 (Mar. 30, 2015), pp. 428-438, XP011574640, ISSN: 0885-3010, DOI: 10.1109/TUFFC.2014.006437.
Sherrit et al., "Novel Horn Designs for Ultrasonic/Sonic Cleaning Welding, Soldering, Cutting and Drilling," Proc. SPIE Smart Structures Conference, vol. 4701, Paper No. 34, San Diego, CA, pp. 353-360, Mar. 2002.
Sullivan, "Cost-Constrained Selection of Strand Diameter and Number in a Litz-Wire Transformer Winding," IEEE Transactions on Power Electronics, vol. 16, No. 2, Mar. 2001, pp. 281-288.
Sullivan, "Optimal Choice for Number of Strands in a Litz-Wire Transformer Winding," IEEE Transactions on Power Electronics, vol. 14, No. 2, Mar. 1999, pp. 283-291.
Technology Overview, printed from www.harmonicscalpel.com, Internet site, website accessed on Jun. 13, 2007, (3 pages).
Wall et al., "Thermal modification of collagen," J Shoulder Elbow Surg, No. 8, pp. 339-344 (Jul./Aug. 1999).
Walsh, S. J., White, R. G., "Vibrational Power Transmission in Curved Beams," Journal of Sound and Vibration, 233(3), 455-488 (2000).
Weir, C.E., "Rate of shrinkage of tendon collagen - heat, entropy and free energy of activation of the shrinkage of untreated tendon. Effect of acid salt, pickle, and tannage on the activation of tendon collagen." Journal of the American Leather Chemists Association, 44, pp. 108-140 (1949).
Wells et al., "Altered Mechanical Behavior of Epicardium Under Isothermal Biaxial Loading," Transactions of the ASME, Journal of Biomedical Engineering, vol. 126, pp. 492-497 (Aug. 2004).
Wright, et al., "Time-Temperature Equivalence of Heat-Induced Changes in Cells and Proteins," Feb. 1998. ASME Journal of Biomechanical Engineering, vol. 120, pp. 22-26.

* cited by examiner

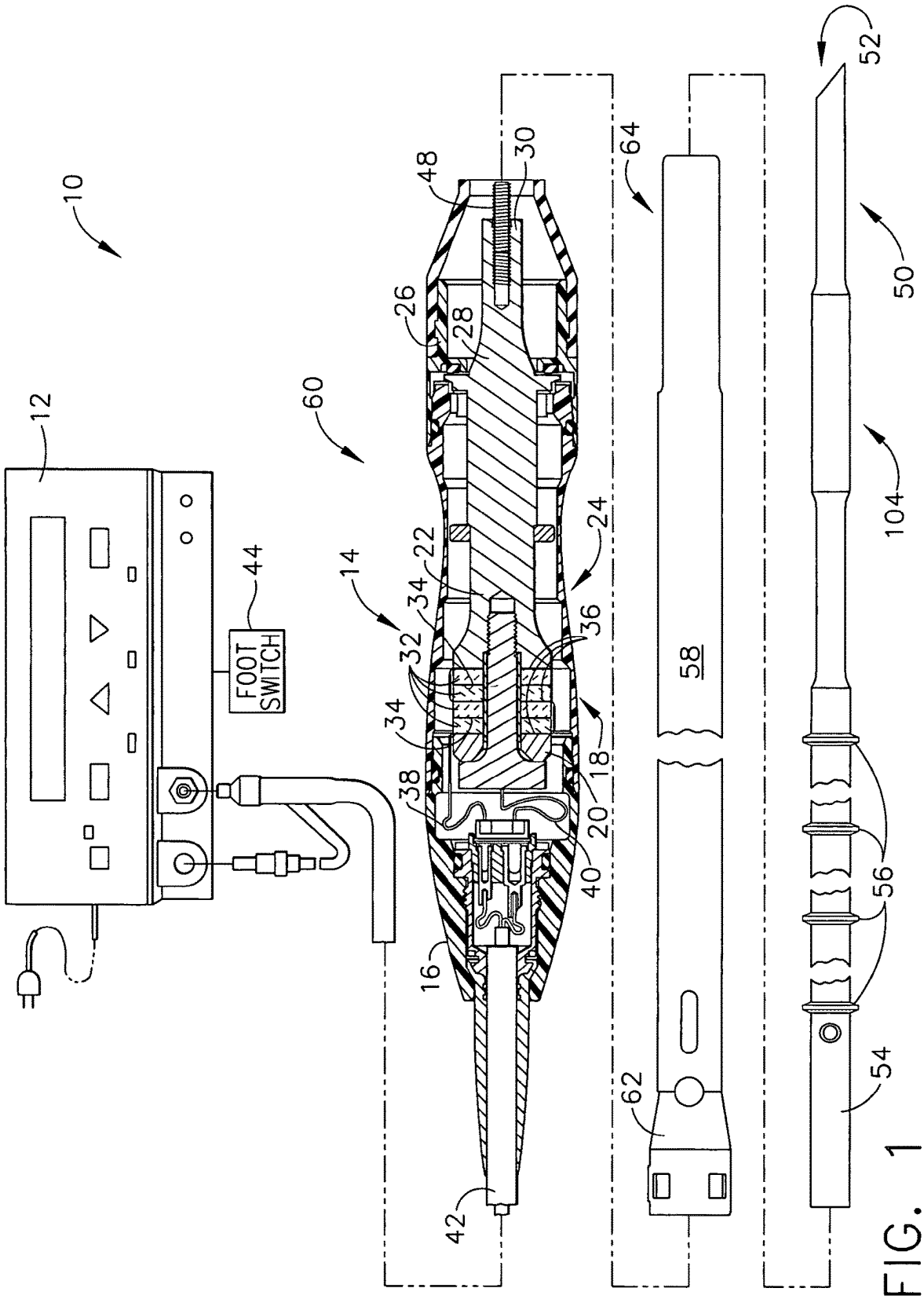
10
12
FOOT SWITCH
44
60
14
16
42
38
34
32
22
26
28
48
30
24
36
18
20
40
64
58
62
52
50
104
56
54

FIG. 1

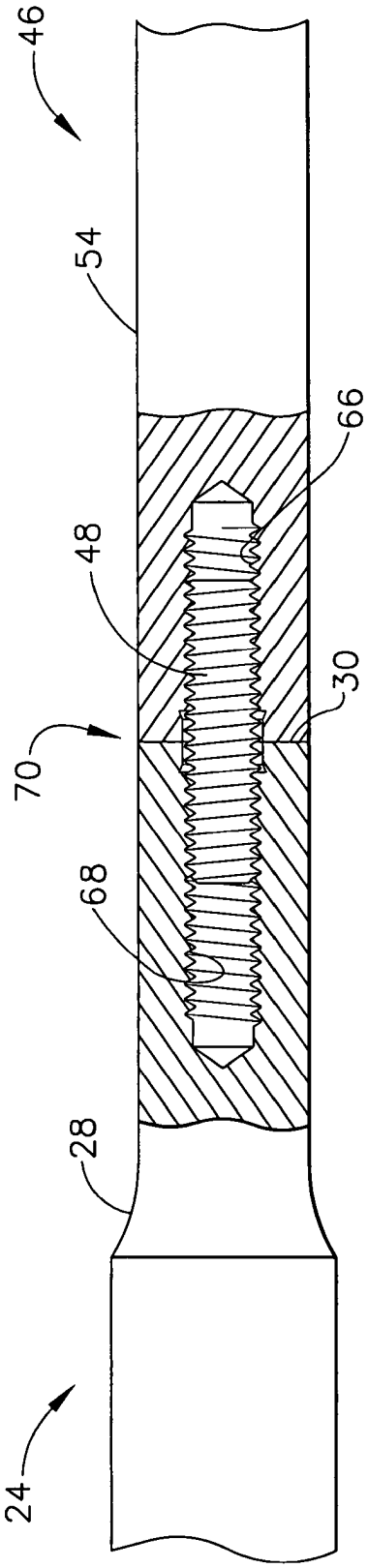

FIG. 2

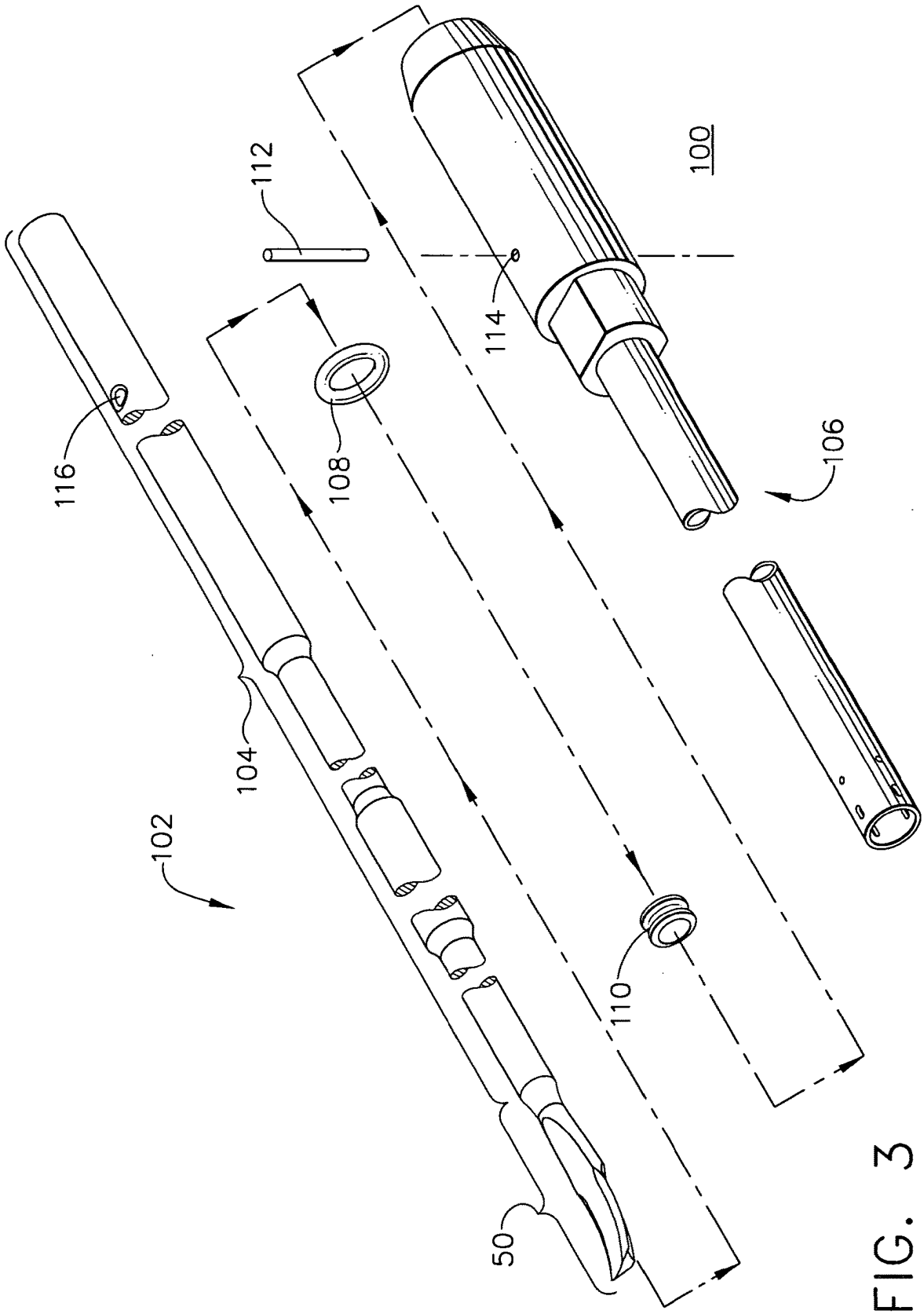

FIG. 3

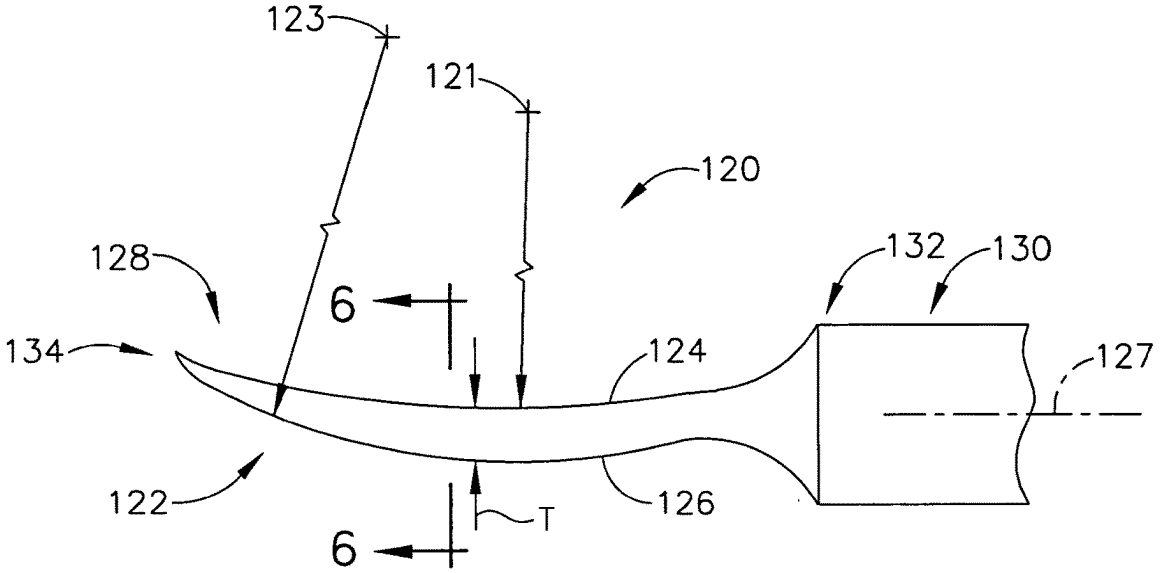
123
121
120
128
132
130
6
134
124
127
122
126
T
6

FIG. 4

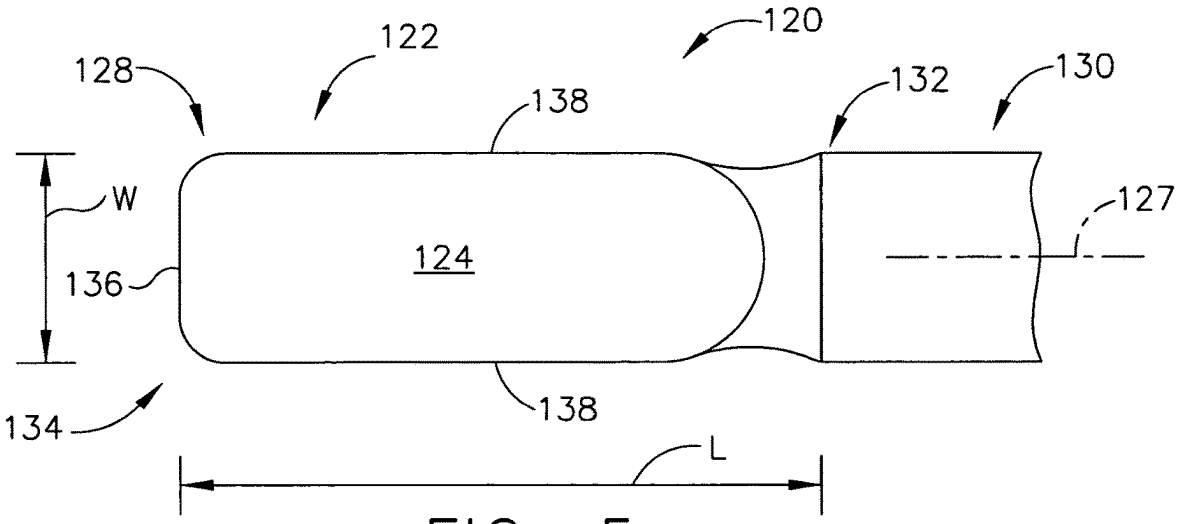
120
122
128
138
132
130
W
127
124
136
138
134
L

FIG. 5

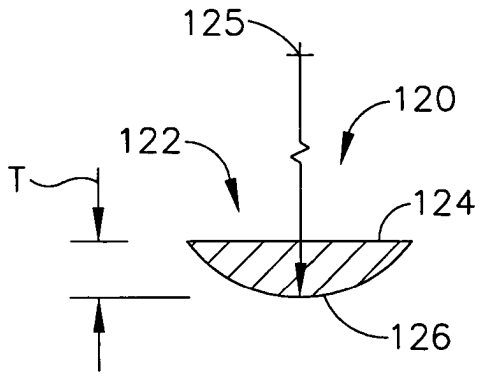

FIG. 6

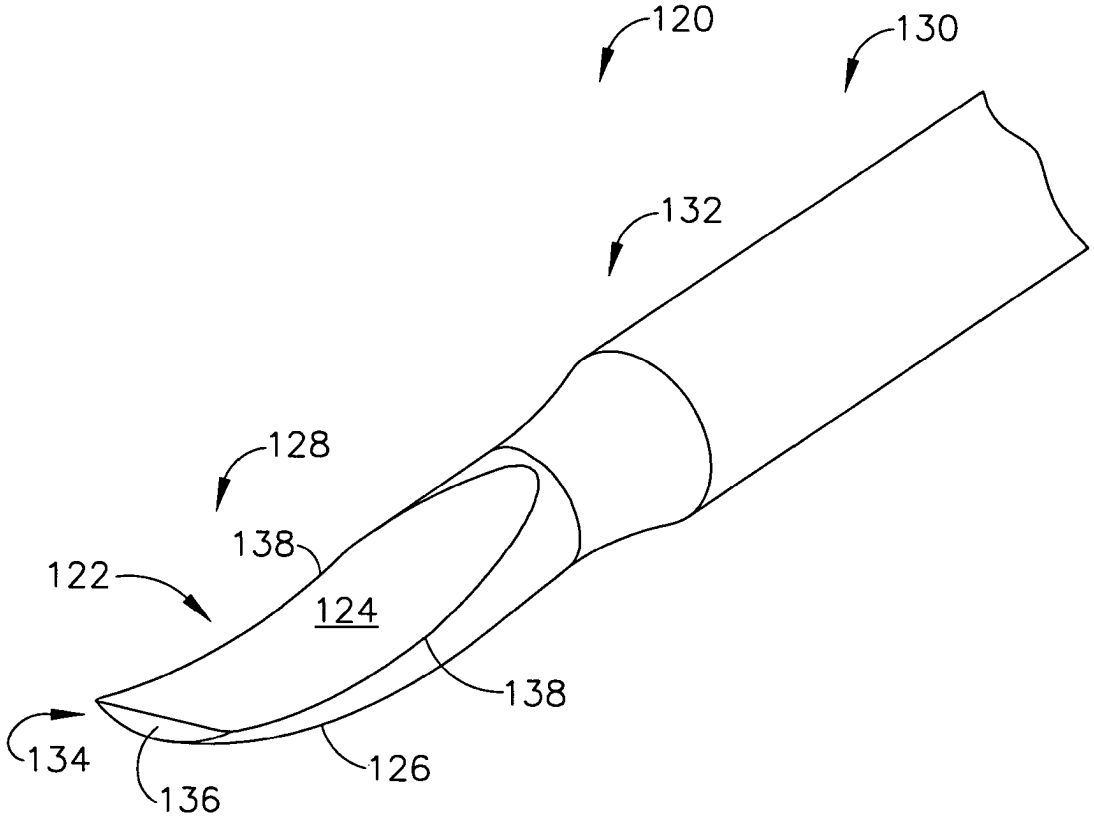

FIG. 7

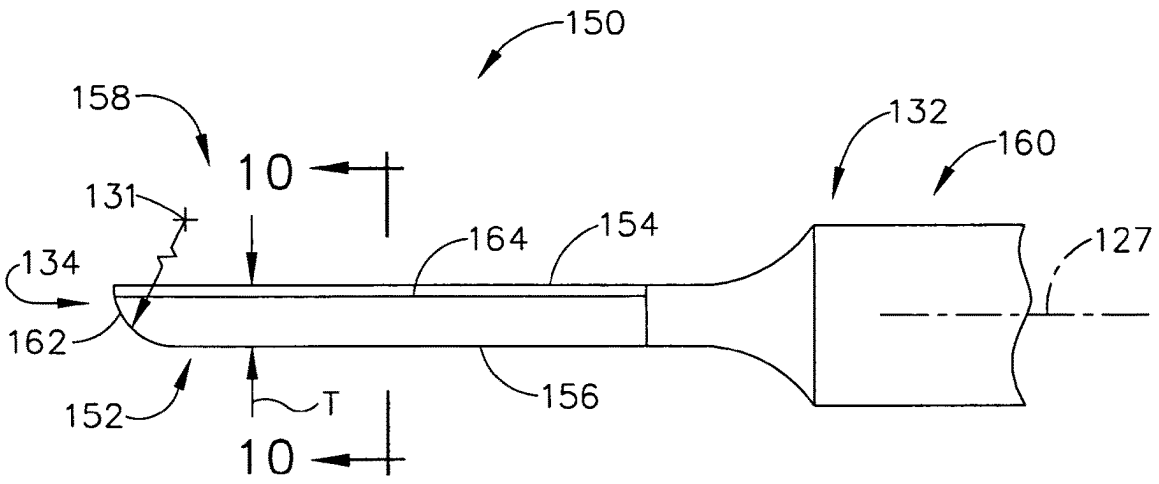
150
158
10
131
134
162
152
T
10
164
154
156
132
160
127

FIG. 8

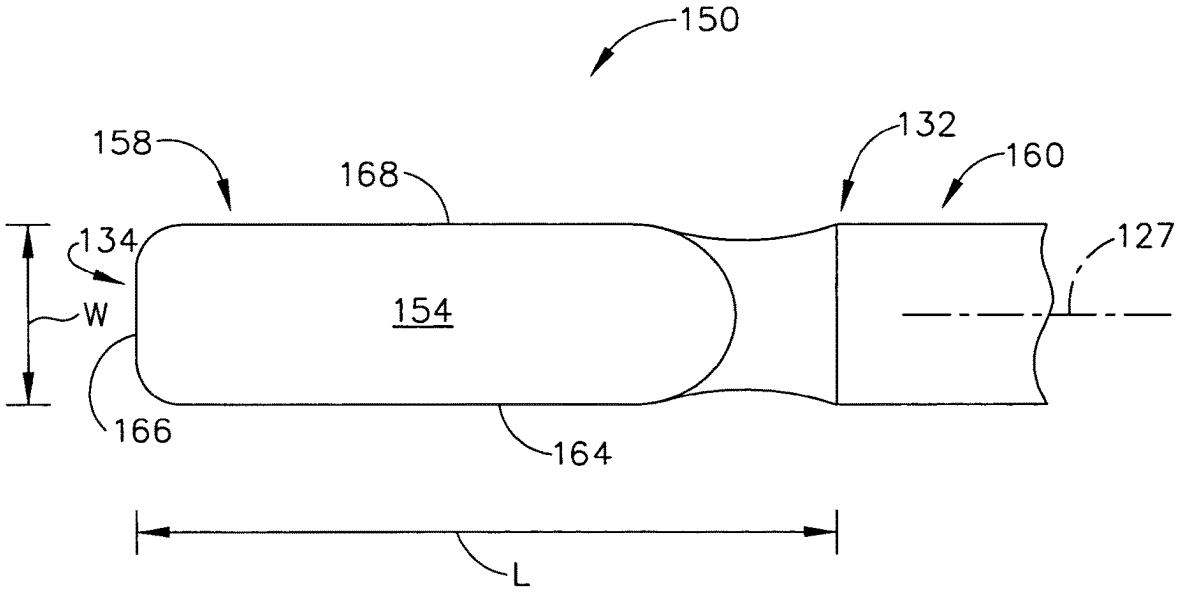
150
158
168
134
W
154
166
164
L
132
160
127

FIG. 9

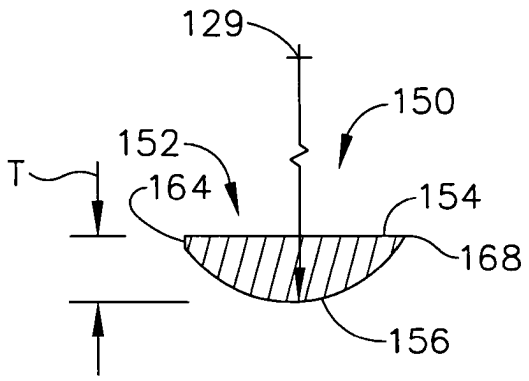

FIG. 10

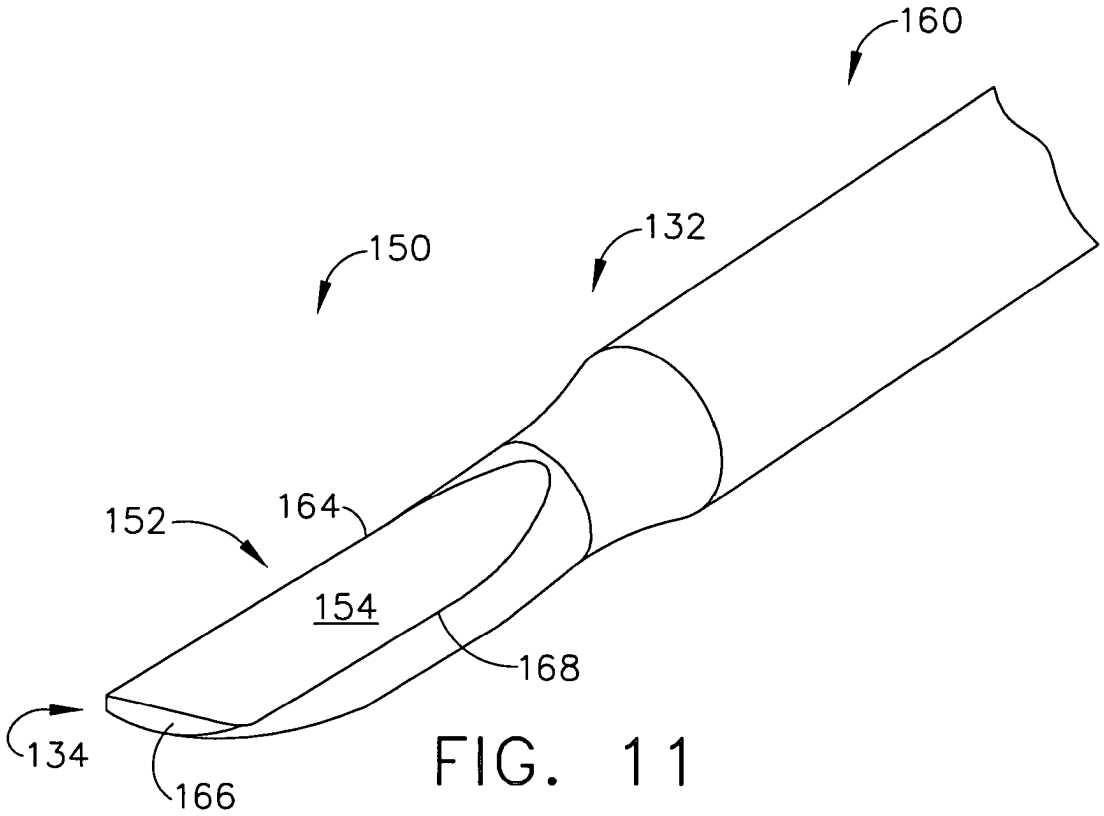

FIG. 11

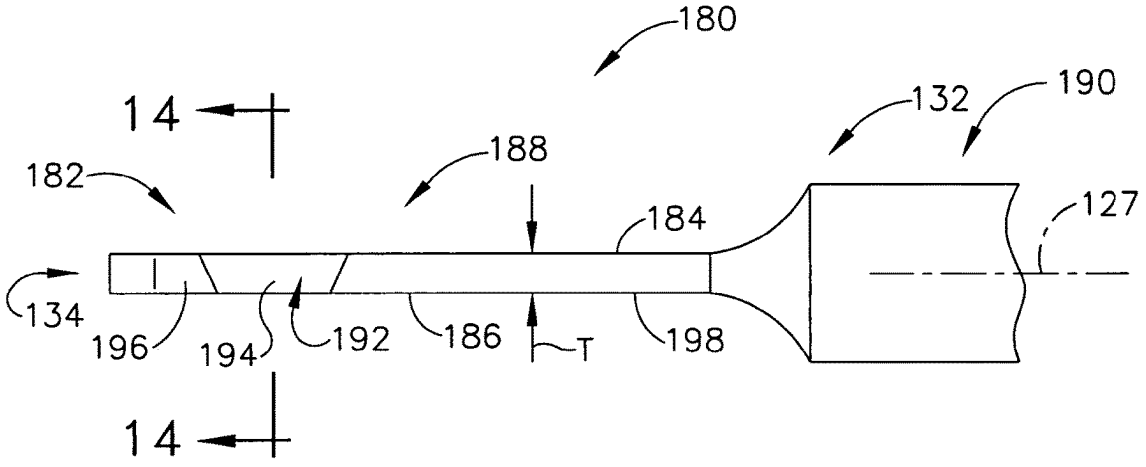
180
14
14
182
188
132
190
184
127
134
196
194
192
186
T
198

FIG. 12

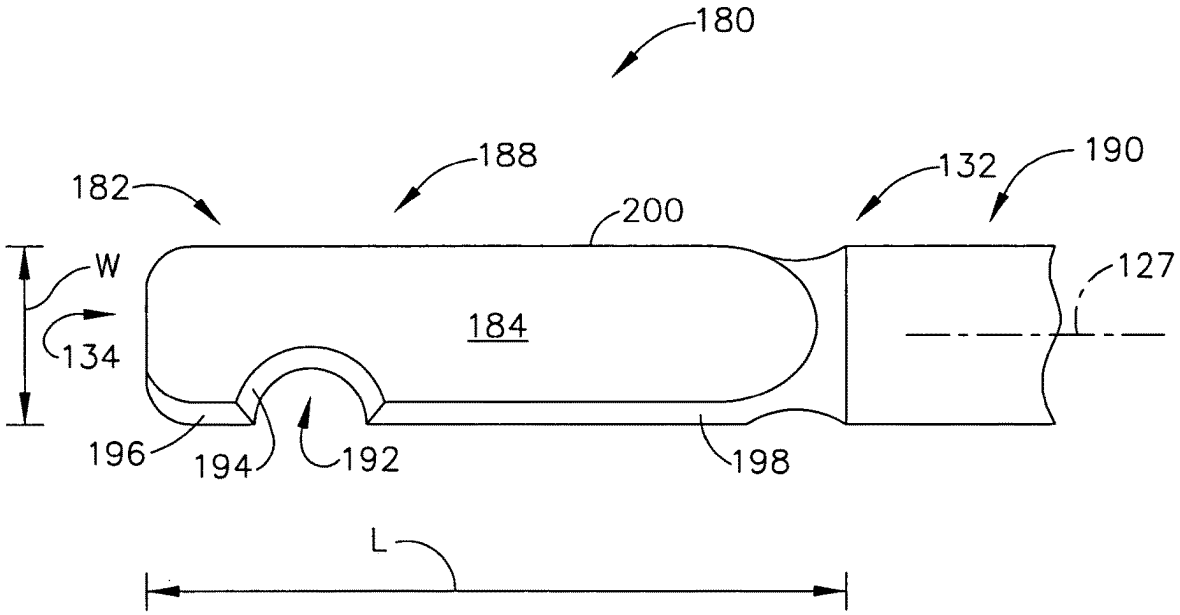
180
182
188
200
132
190
W
184
127
134
196
194
192
198
L

FIG. 13

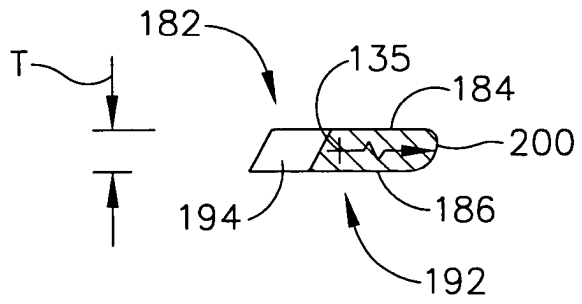
182
T
135
184
200
194
186
192

FIG. 14

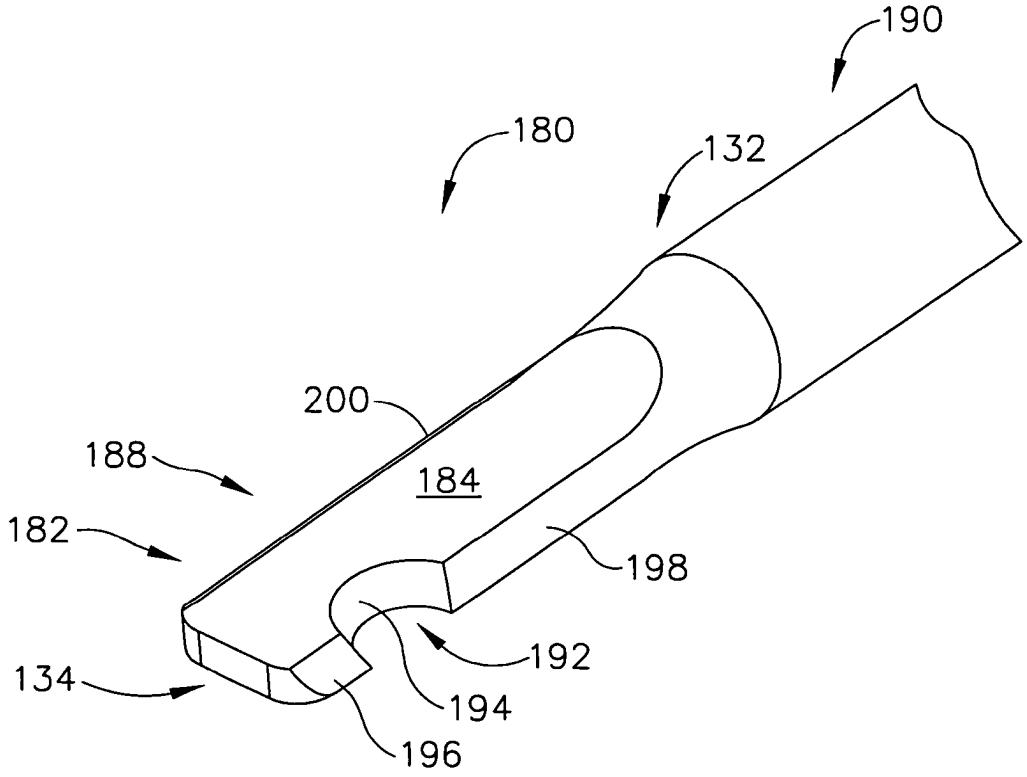
190
180
132
200
188
184
182
198
192
134
194
196

FIG. 15

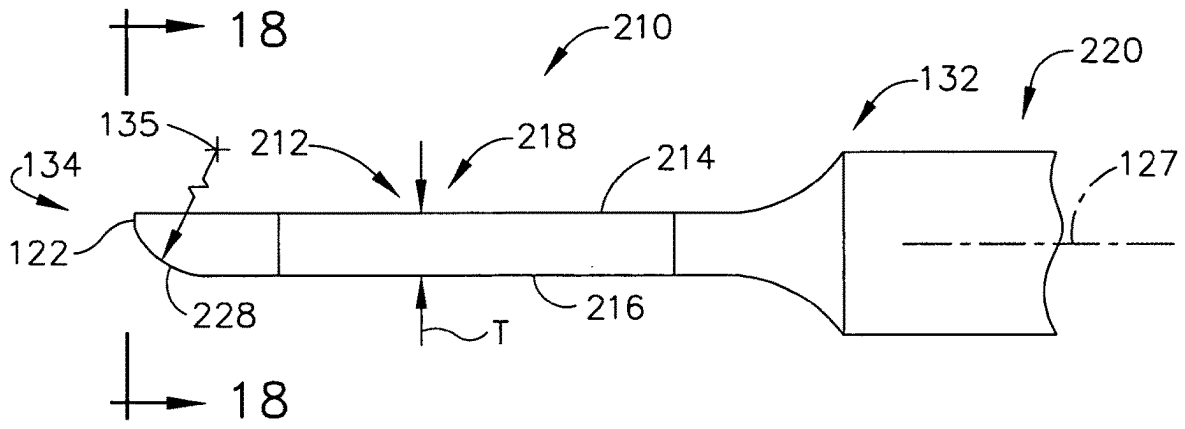
18
210
220
132
135
212
218
214
127
134
122
228
216
T
18

FIG. 16

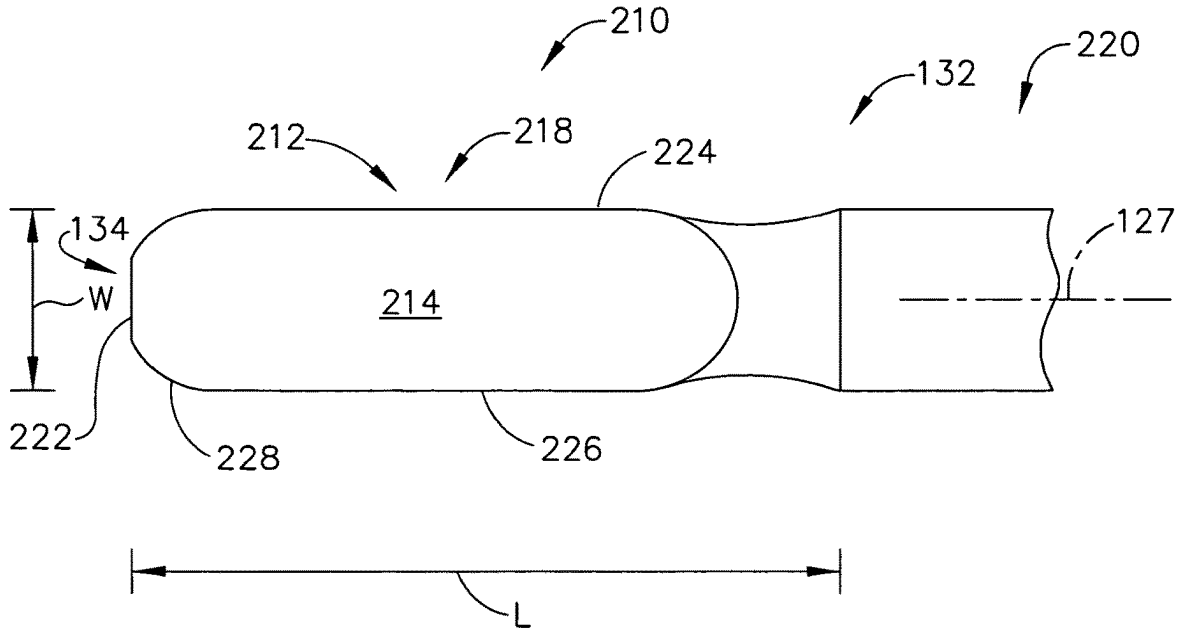
210
220
132
212
218
224
134
127
W
214
222
228
226
L

FIG. 17

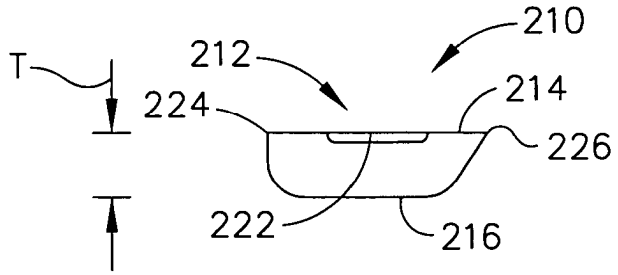
210
212
T
224
214
226
222
216

FIG. 18

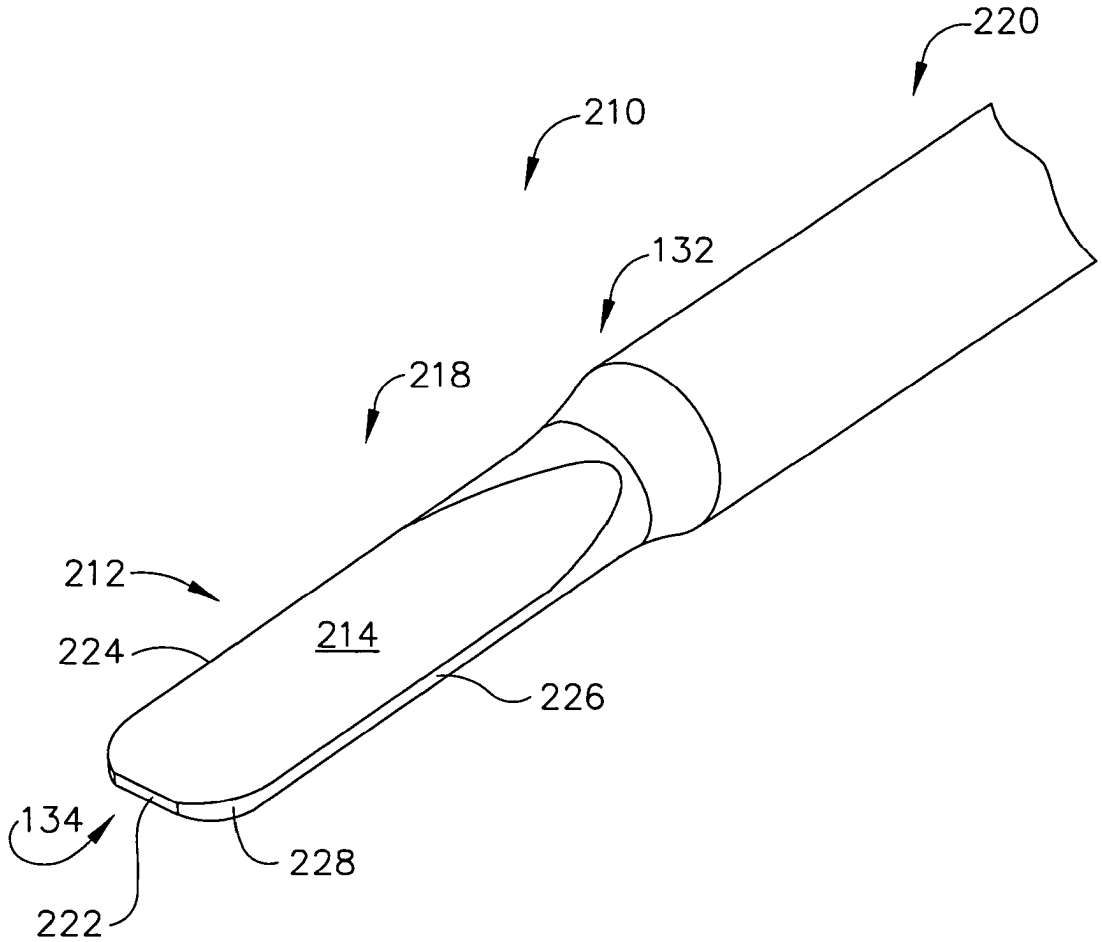
220
210
132
218
212
224
214
226
134
228
222

FIG. 19

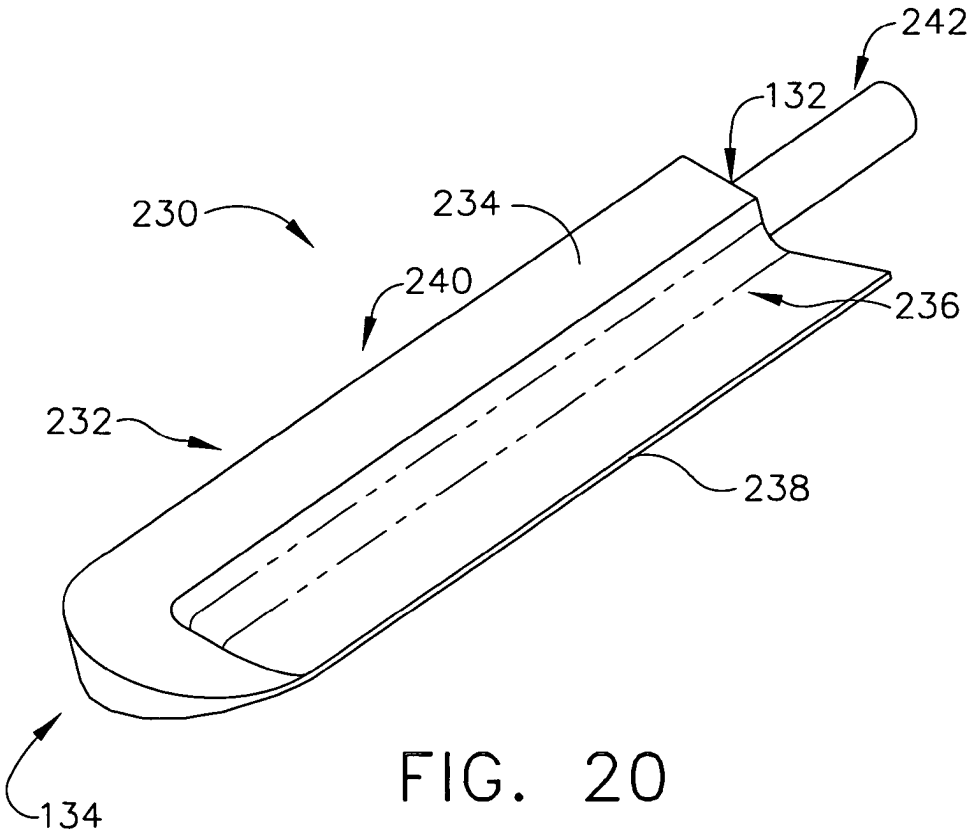
242
132
230
234
240
236
232
238
134

FIG. 20

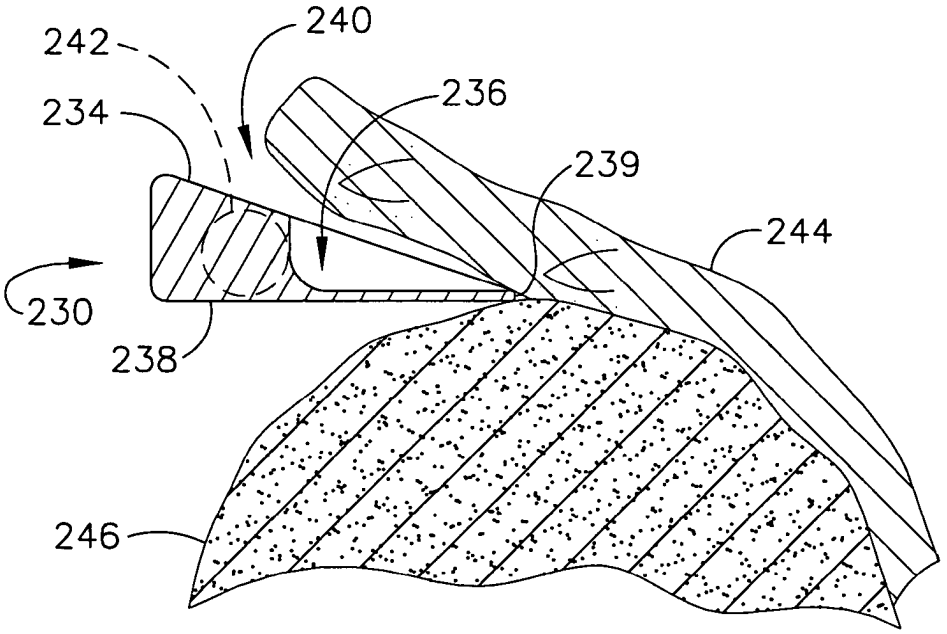
242
240
234
236
239
244
230
238
246

FIG. 21

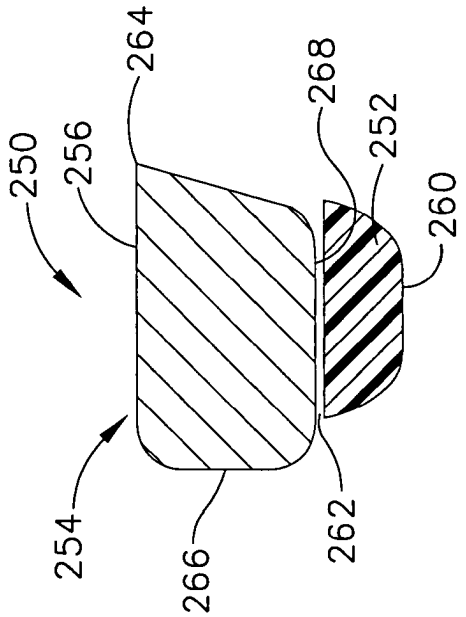

FIG. 24

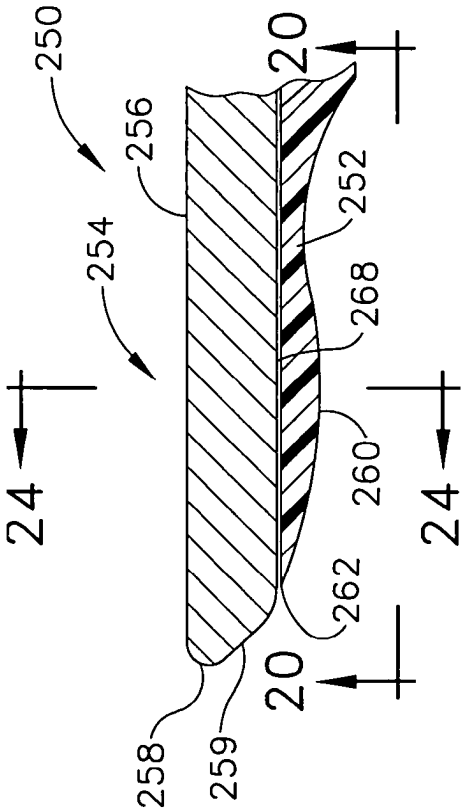

FIG. 22

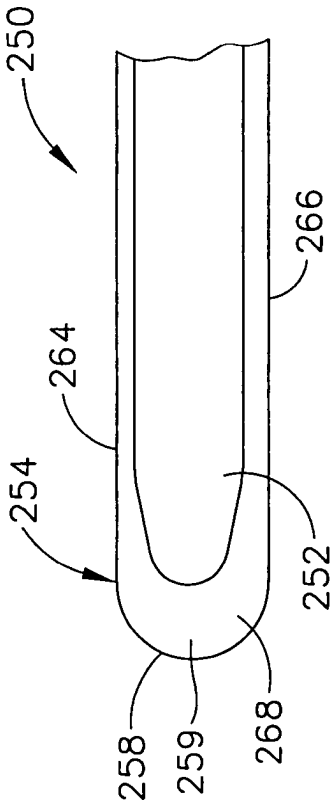

FIG. 23

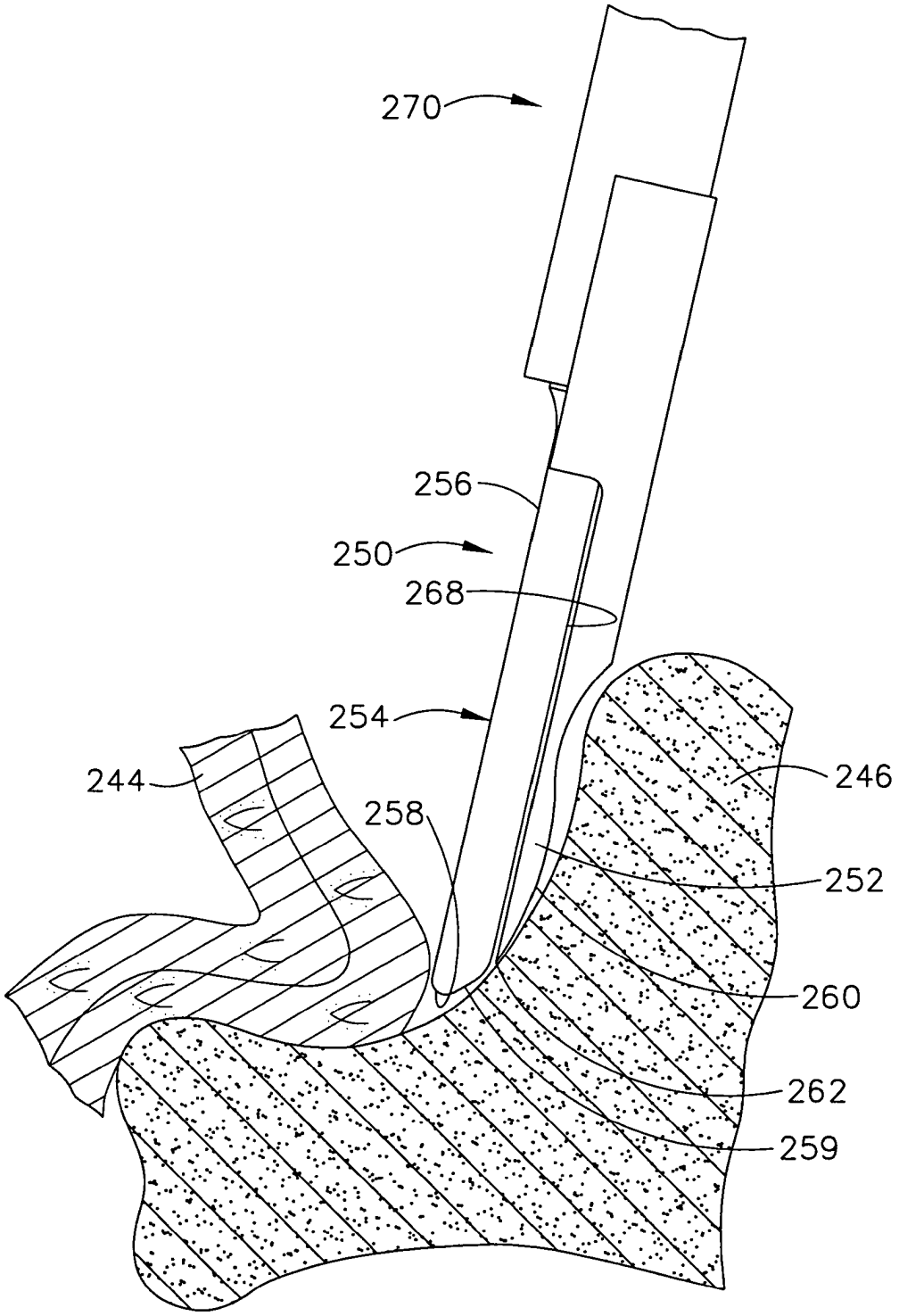

FIG. 25

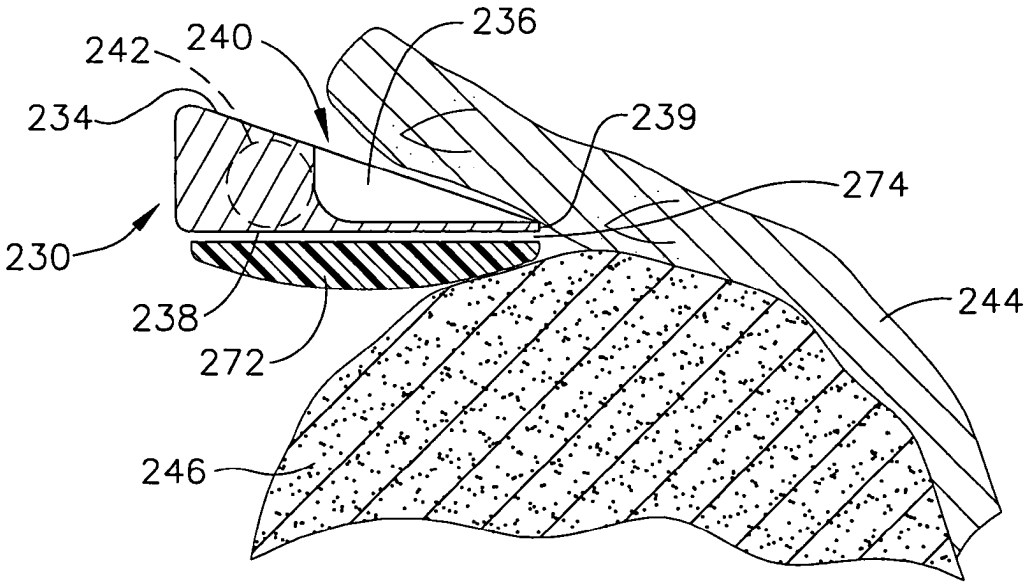

FIG. 26

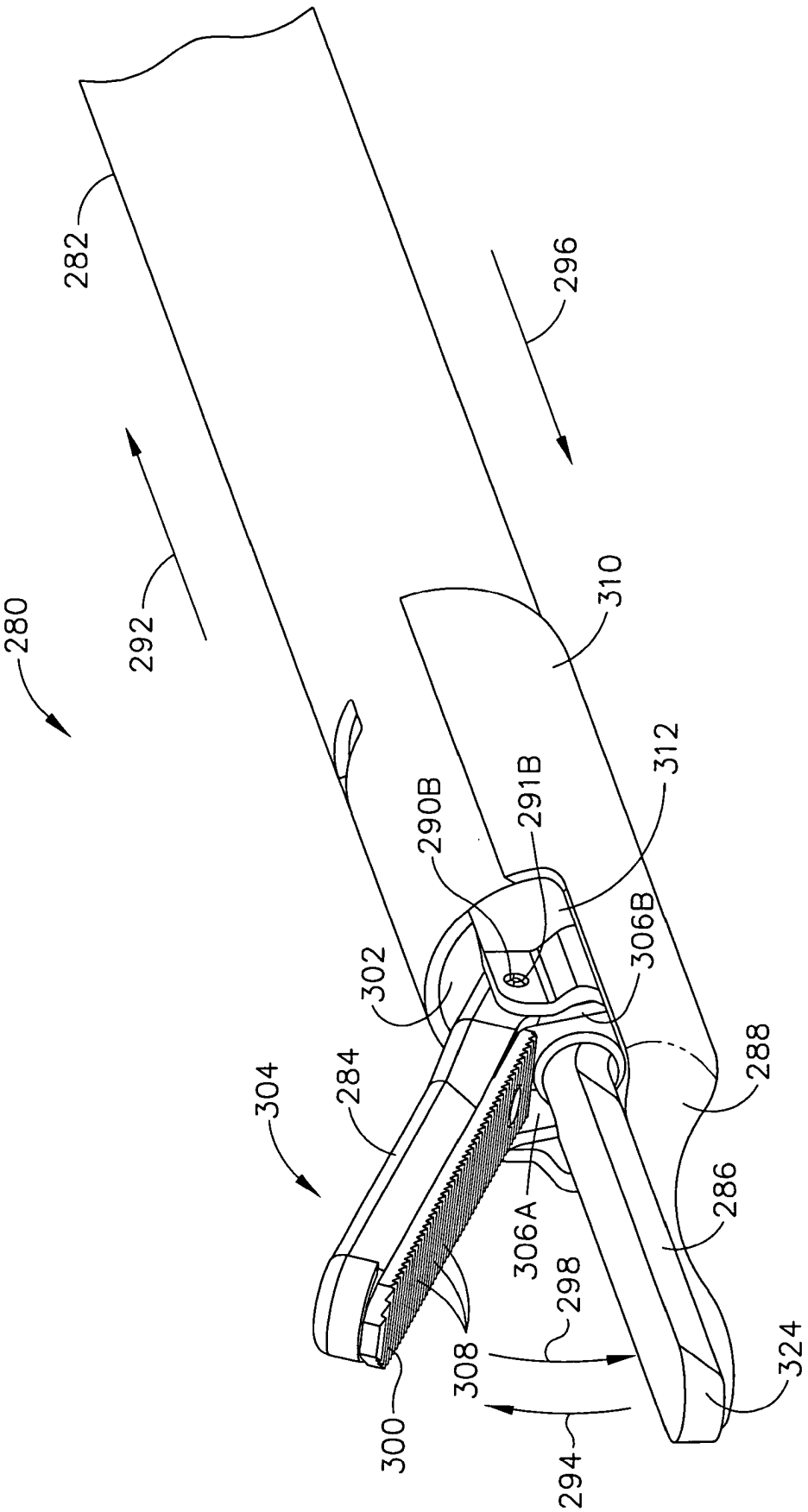
280
282
292
296
310
312
290B
291B
302
306B
304
284
288
286
306A
298
308
300
294
324

FIG. 27

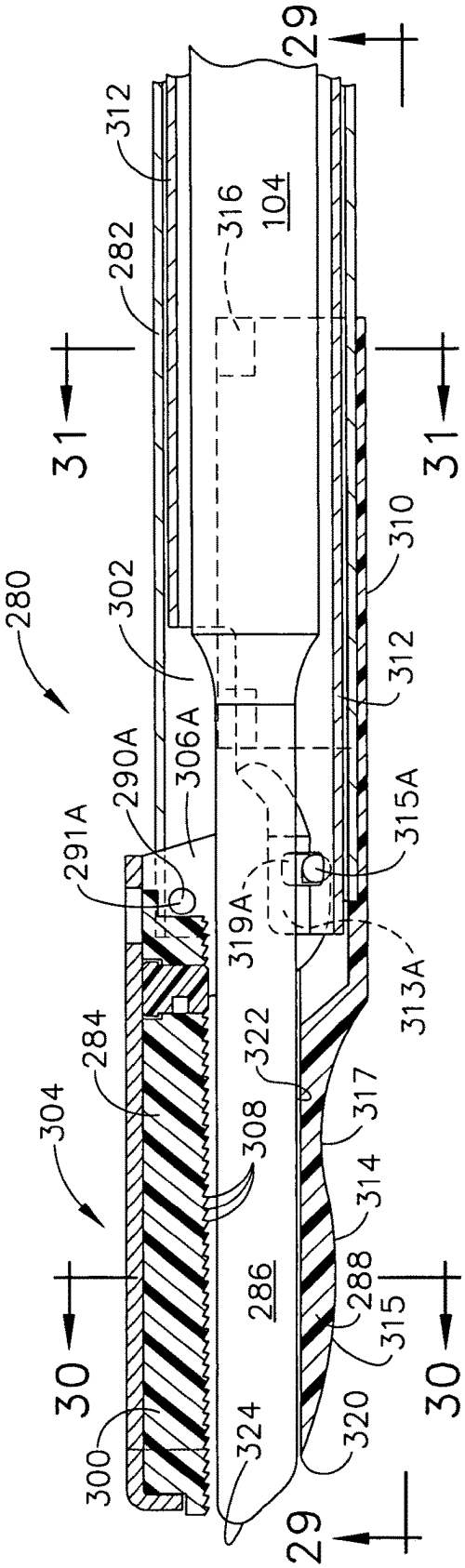
280
312
282
316
104
29
31
31
302
310
312
306A
290A
291A
315A
319A
313A
284
322
317
304
308
314
286
288
315
30
30
300
324
320
29

FIG. 28

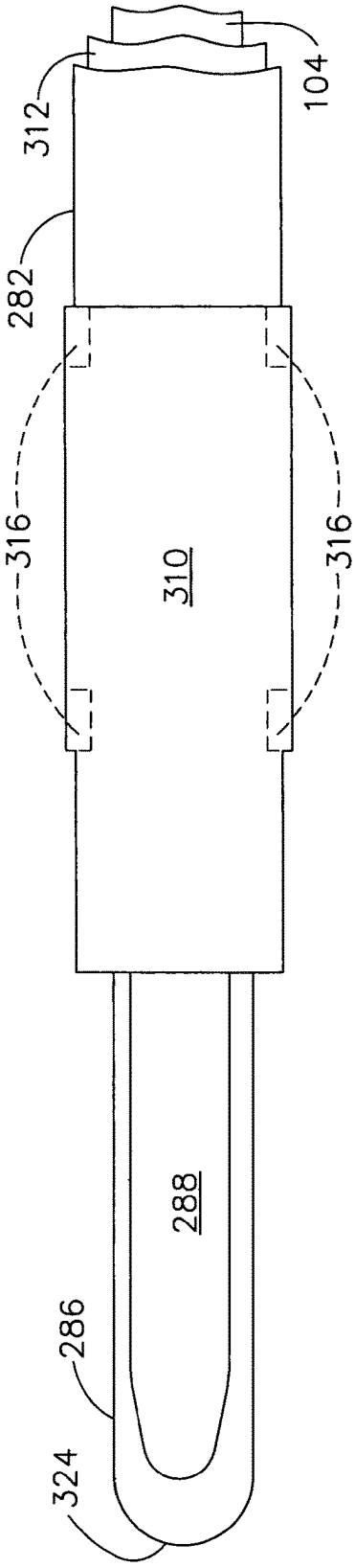
312
104
282
316
310
316
288
286
324

FIG. 29

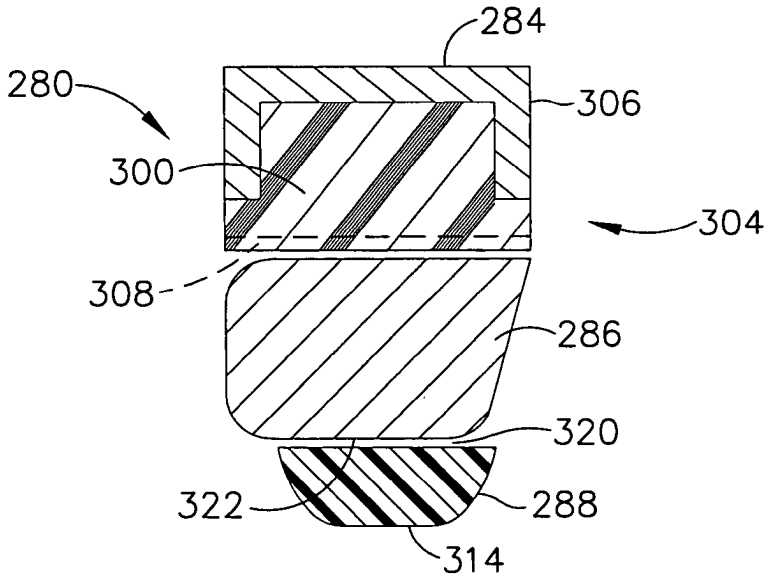
284
280
306
300
304
308
286
320
322
288
314

FIG. 30

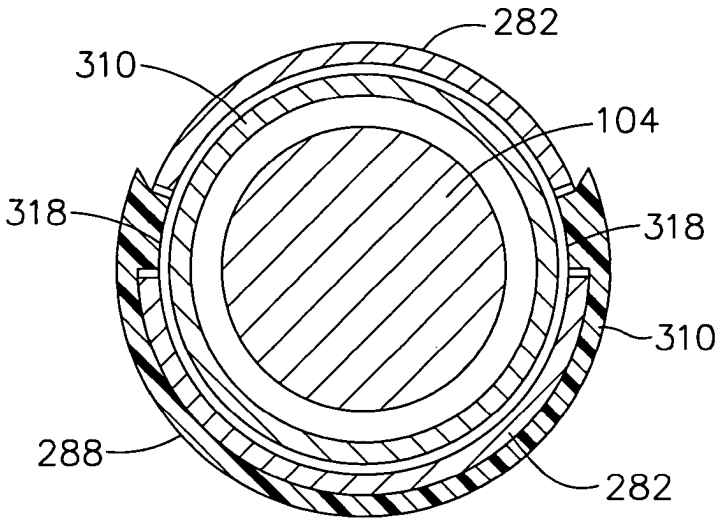
282
310
104
318
318
310
288
282

FIG. 31

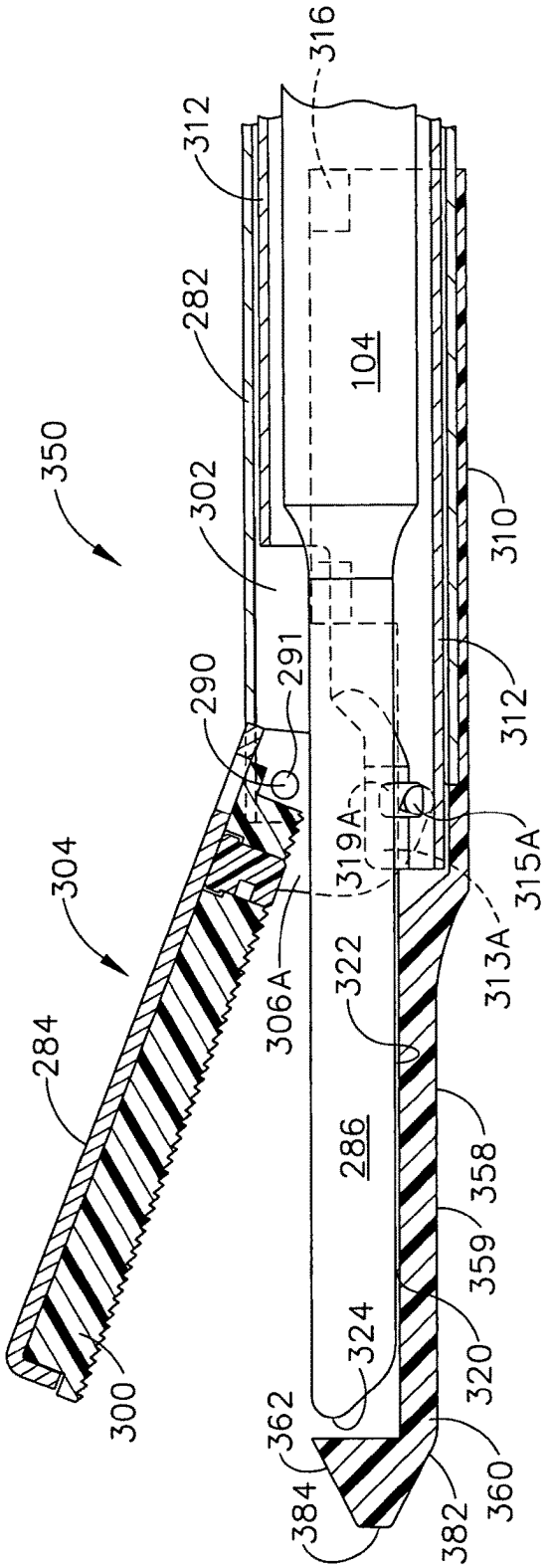
350
304
284
300
302
282
312
316
104
290
291
319A
306A
322
286
324
362
384
382
360
320
359
358
313A
315A
312
310

FIG. 32

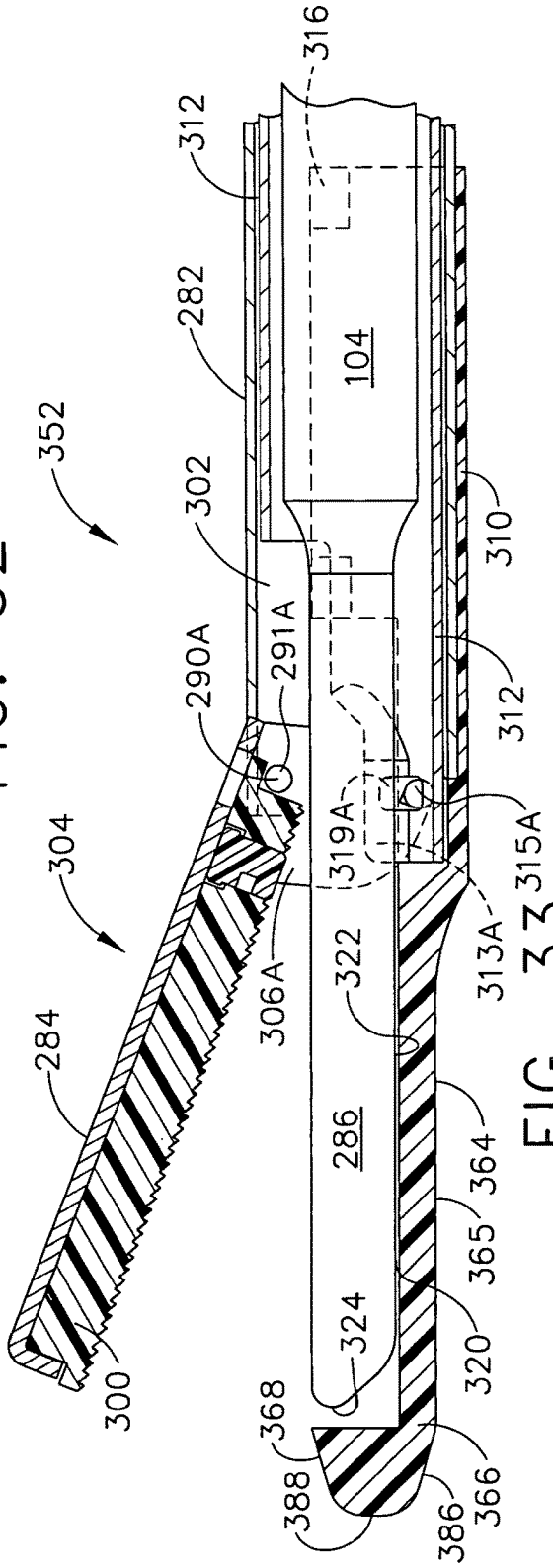
352
304
284
300
302
282
312
316
104
290A
291A
319A
306A
322
286
324
368
388
386
366
320
365
364
313A
315A
312
310

FIG. 33

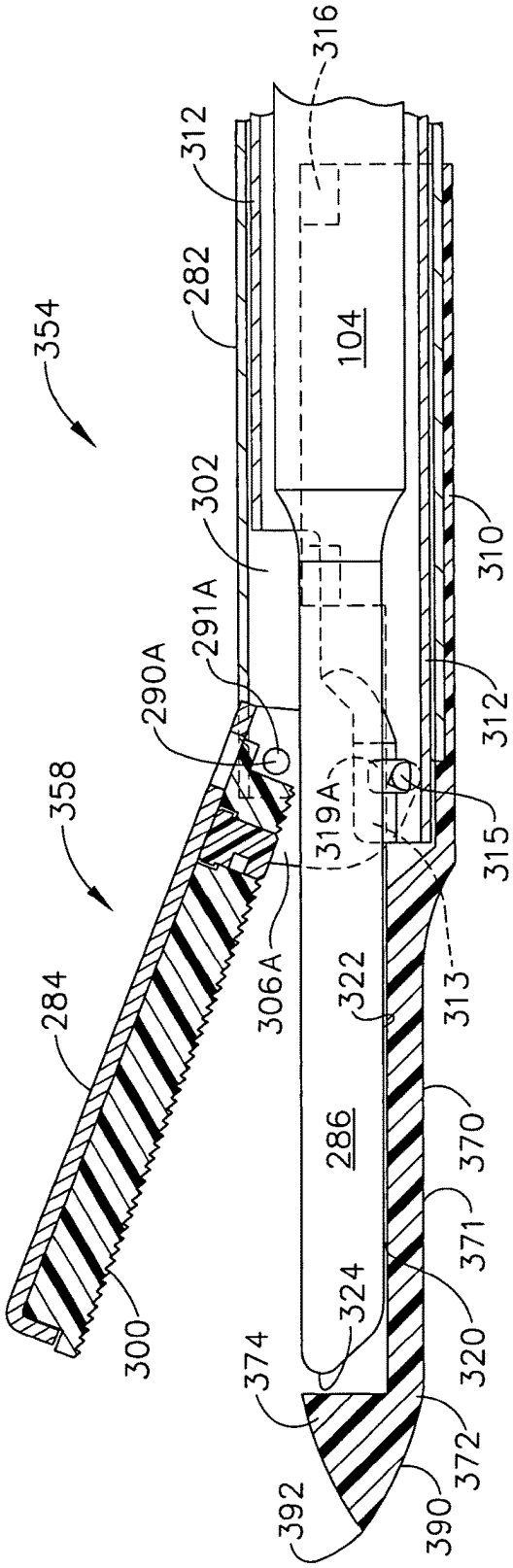
354
358
284
300
290A
291A
282
302
312
316
104
310
312
315
319A
306A
322
313
286
370
371
320
324
374
372
390
392

FIG. 34

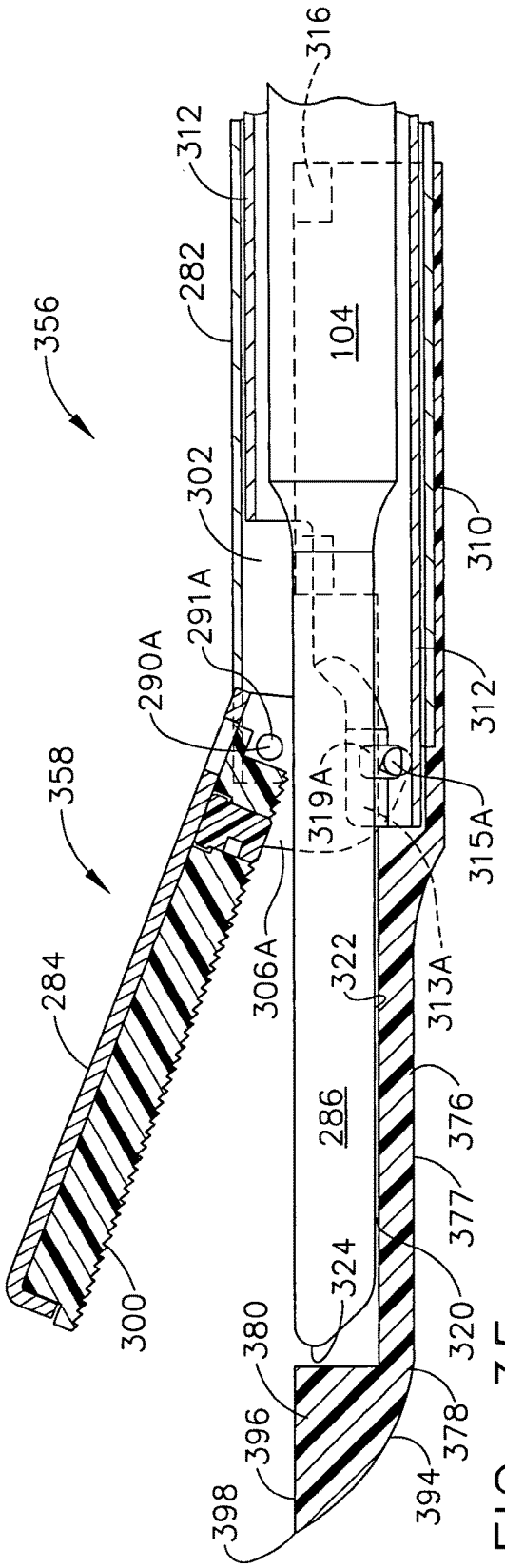
356
358
284
300
290A
291A
282
302
312
316
104
310
312
315A
319A
306A
322
313A
286
376
377
320
324
380
396
398
378
394

FIG. 35

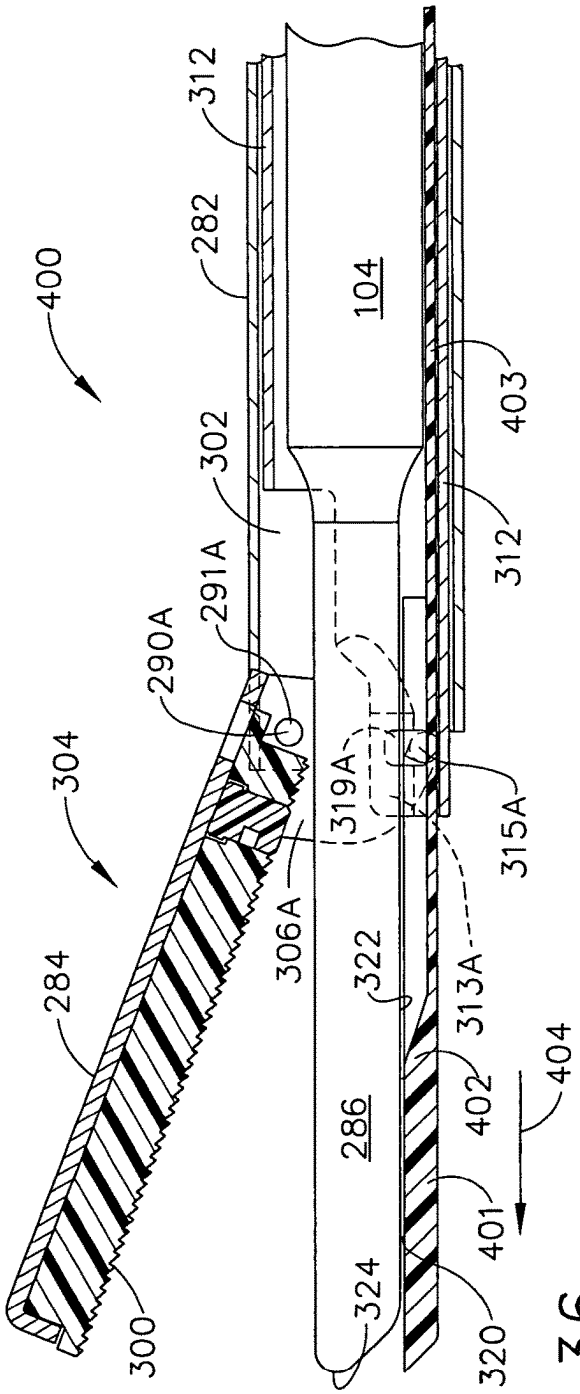
400
312
282
104
403
302
312
291A
290A
304
319A
315A
306A
322
313A
284
404
286
402
401
324
320
300

FIG. 36

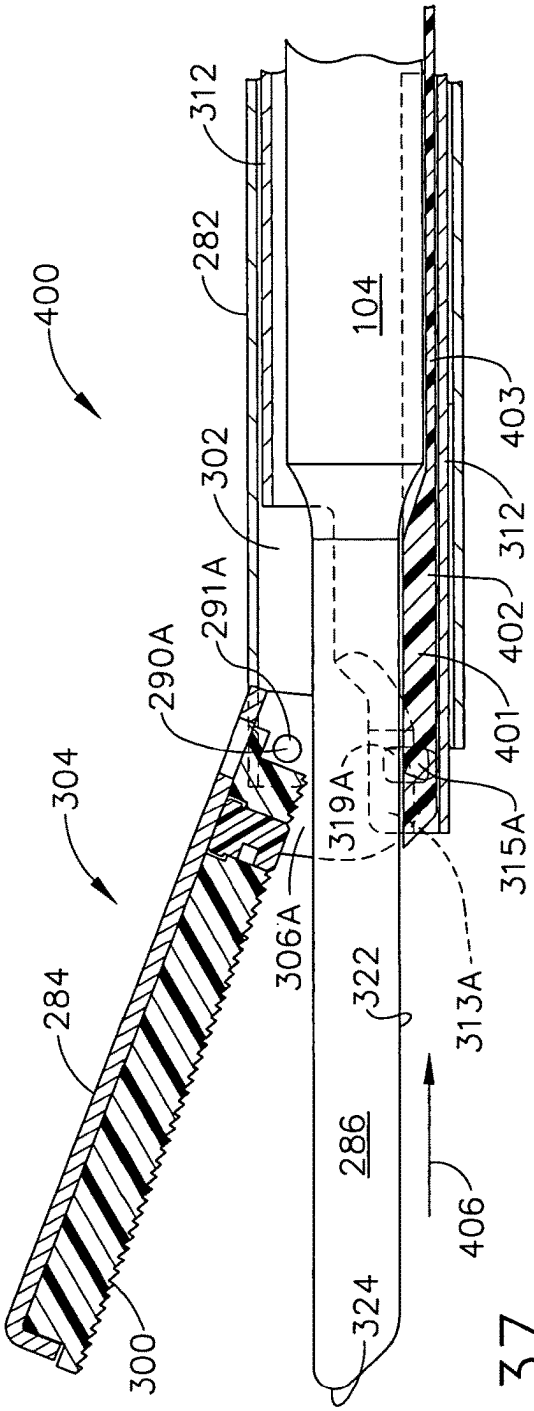
400
312
282
104
403
302
312
291A
402
290A
401
304
319A
315A
306A
322
313A
284
286
406
324
300

FIG. 37

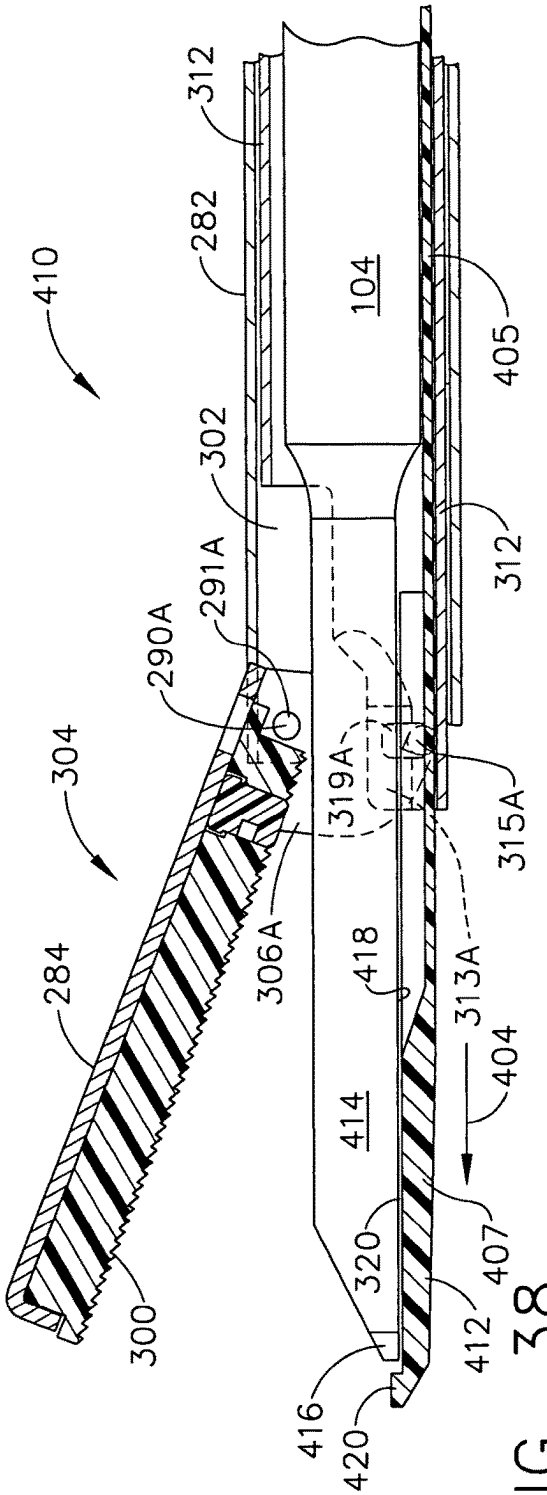
410
304
284
300
312
282
302
291A
290A
306A
319A
104
405
312
315A
418
313A
404
414
320
407
412
416
420

FIG. 38

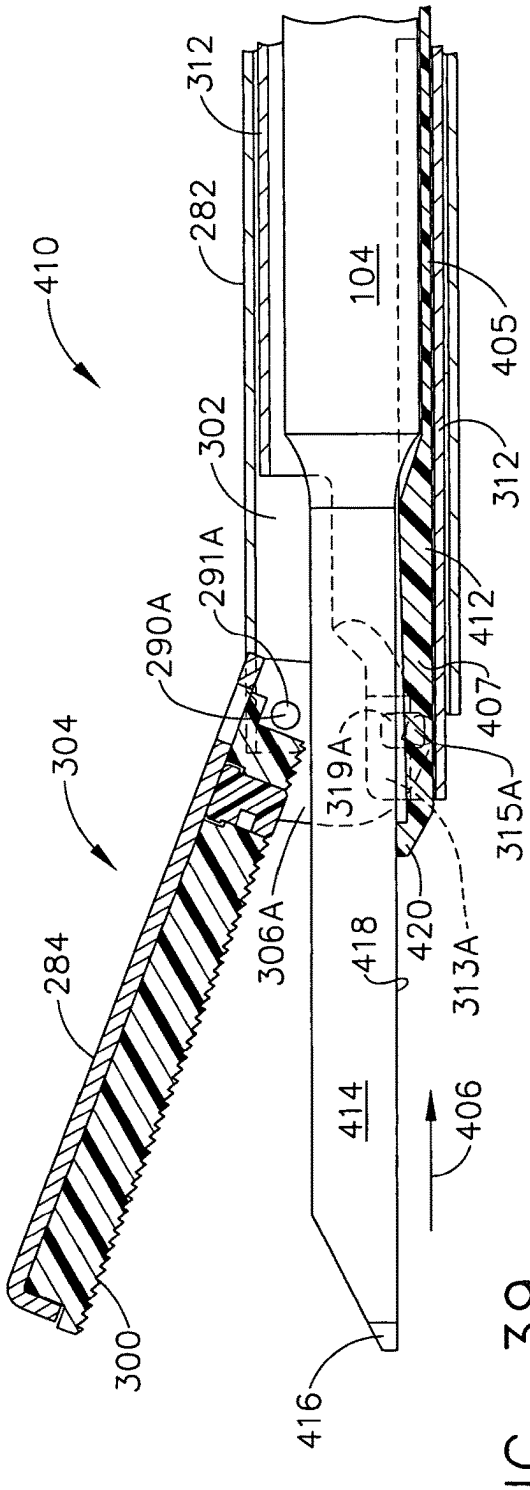
410
304
284
300
312
282
302
291A
290A
306A
319A
104
405
312
412
407
315A
418
420
313A
414
406
416

FIG. 39

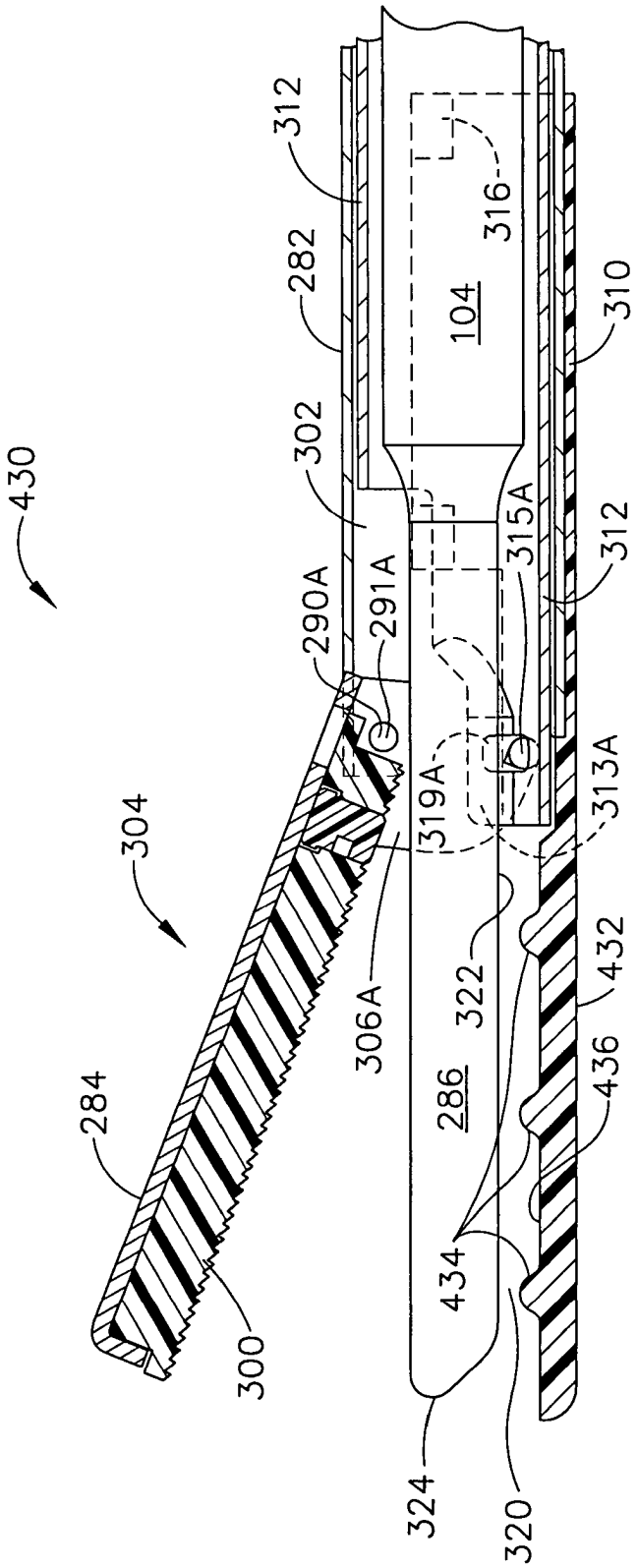
430
304
284
300
290A
291A
302
282
312
306A
319A
104
316
315A
286
322
324
320
434
436
432
313A
310
312

FIG. 40

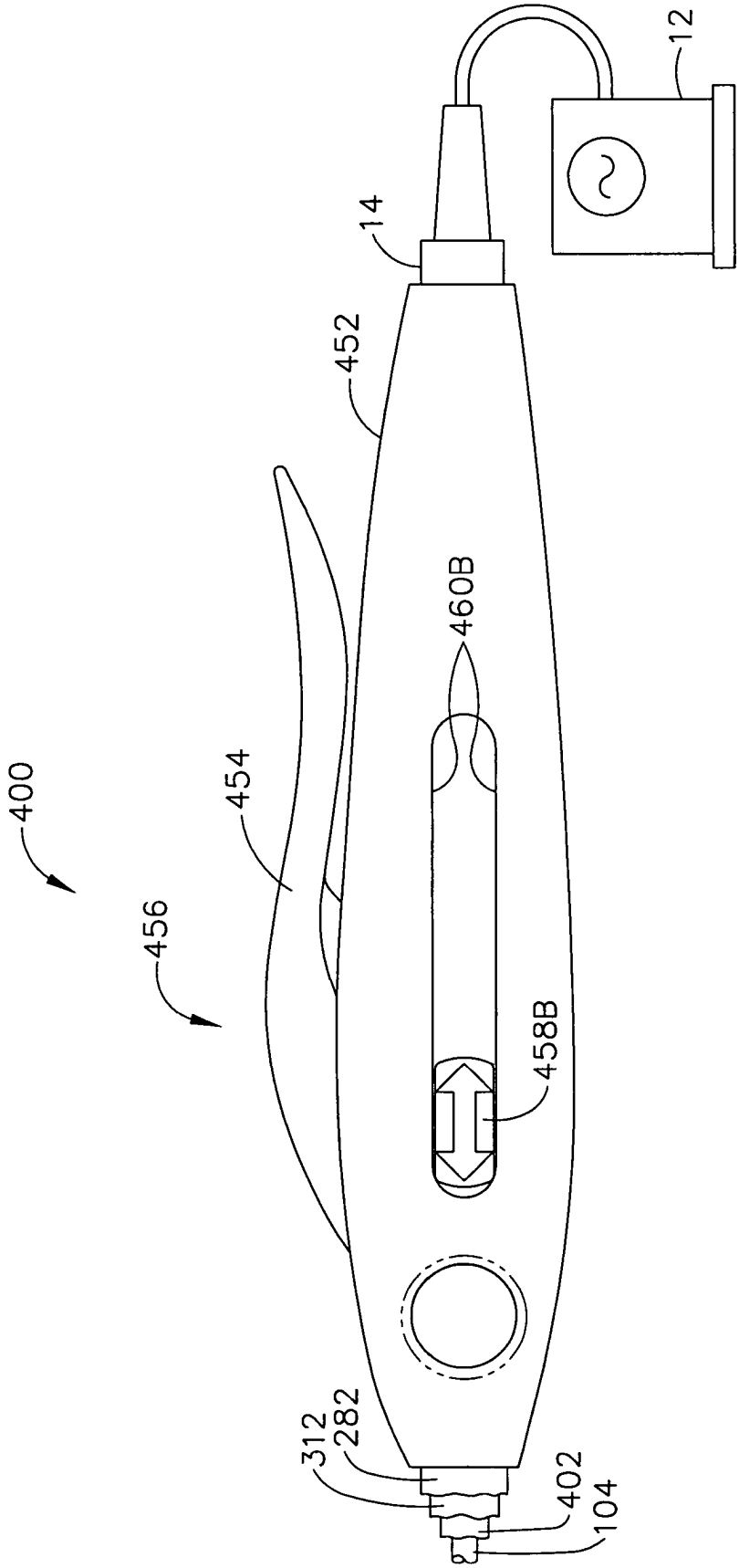

FIG. 41

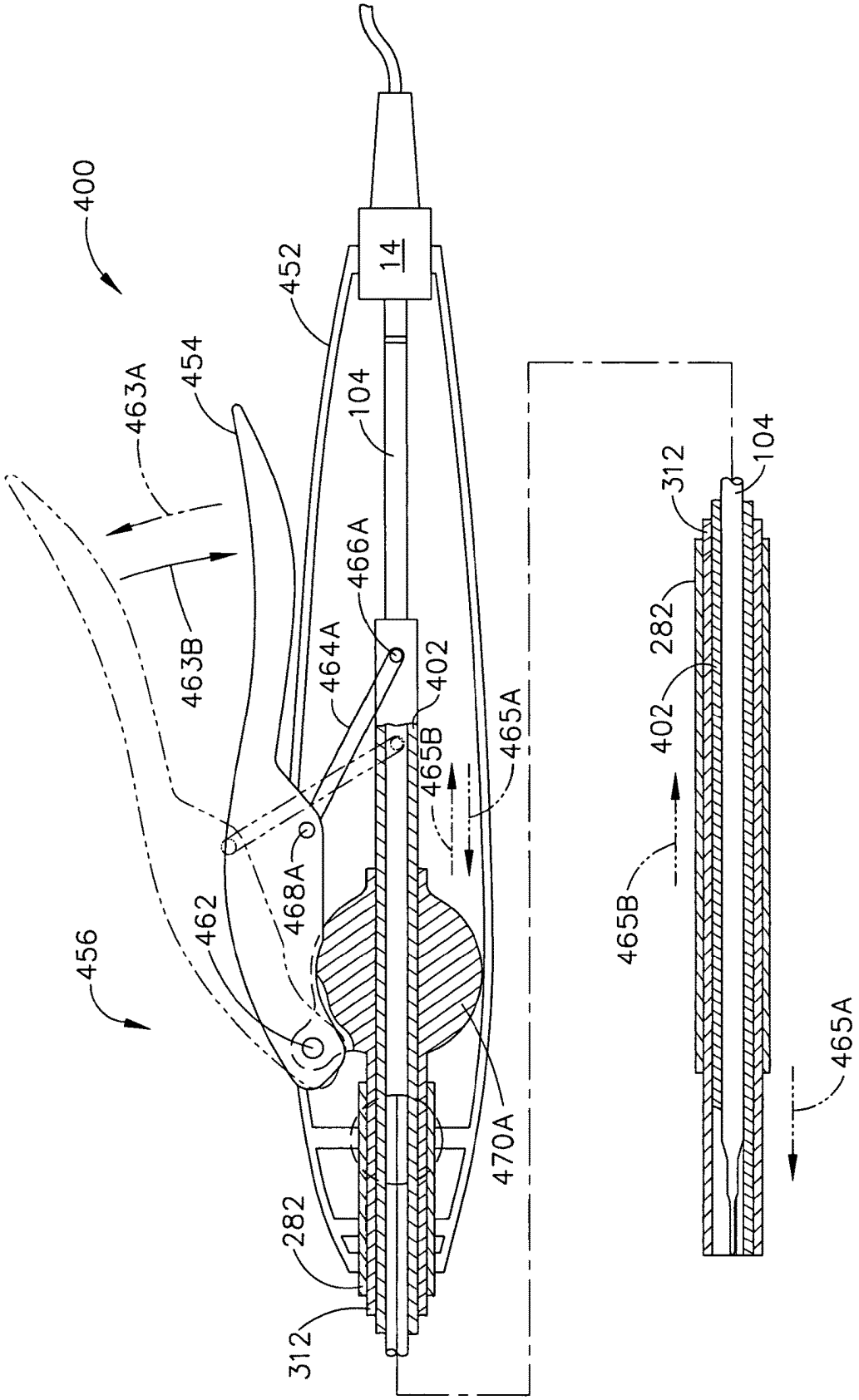
400
456
463A
463B
454
452
14
104
466A
464A
402
465B
465A
468A
462
470A
282
312
312
282
402
465B
104
465A

FIG. 42

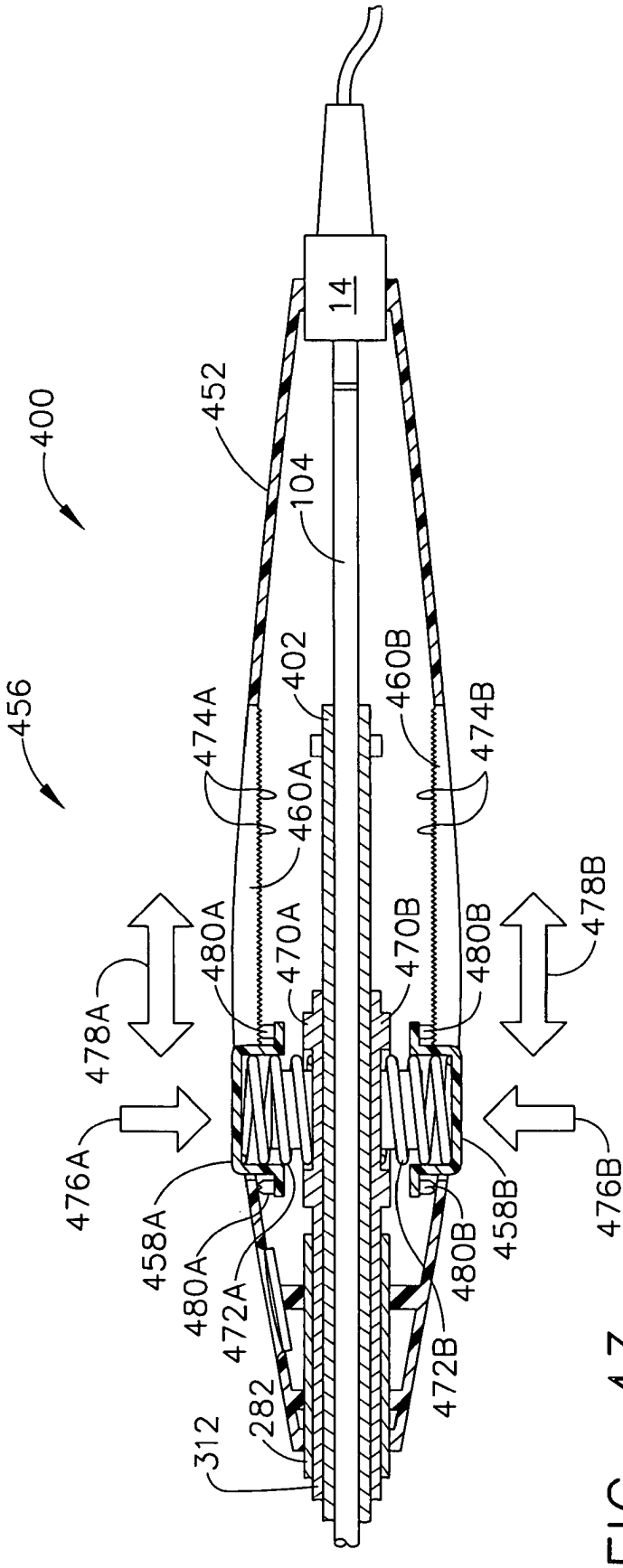
400
456
14
452
104
402
460B
474B
474A
460A
478B
478A
480A
470A
470B
480B
476A
476B
458A
458B
480A
480B
472A
472B
282
312

FIG. 43

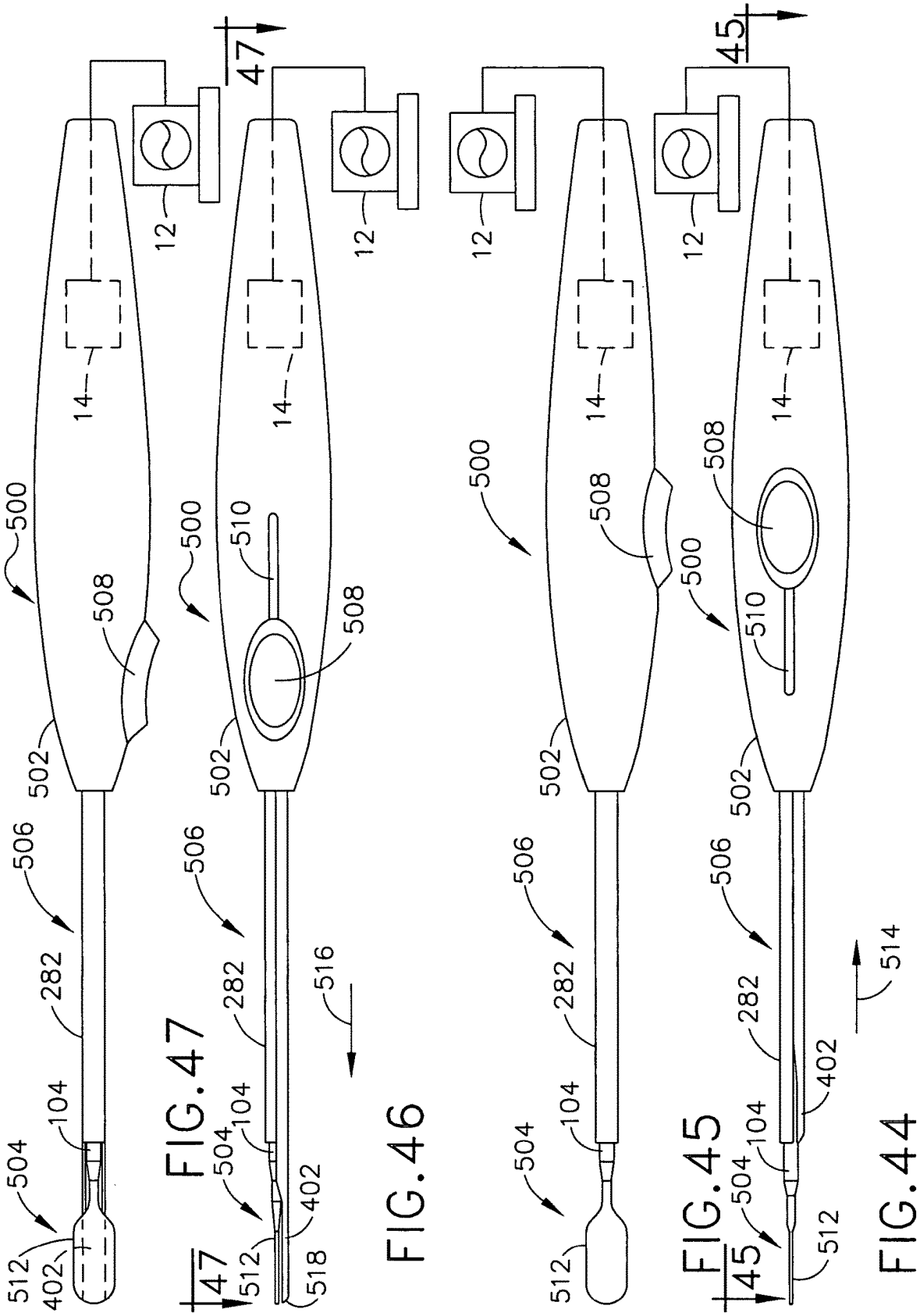

FIG. 47

FIG. 46

FIG. 45

FIG. 44

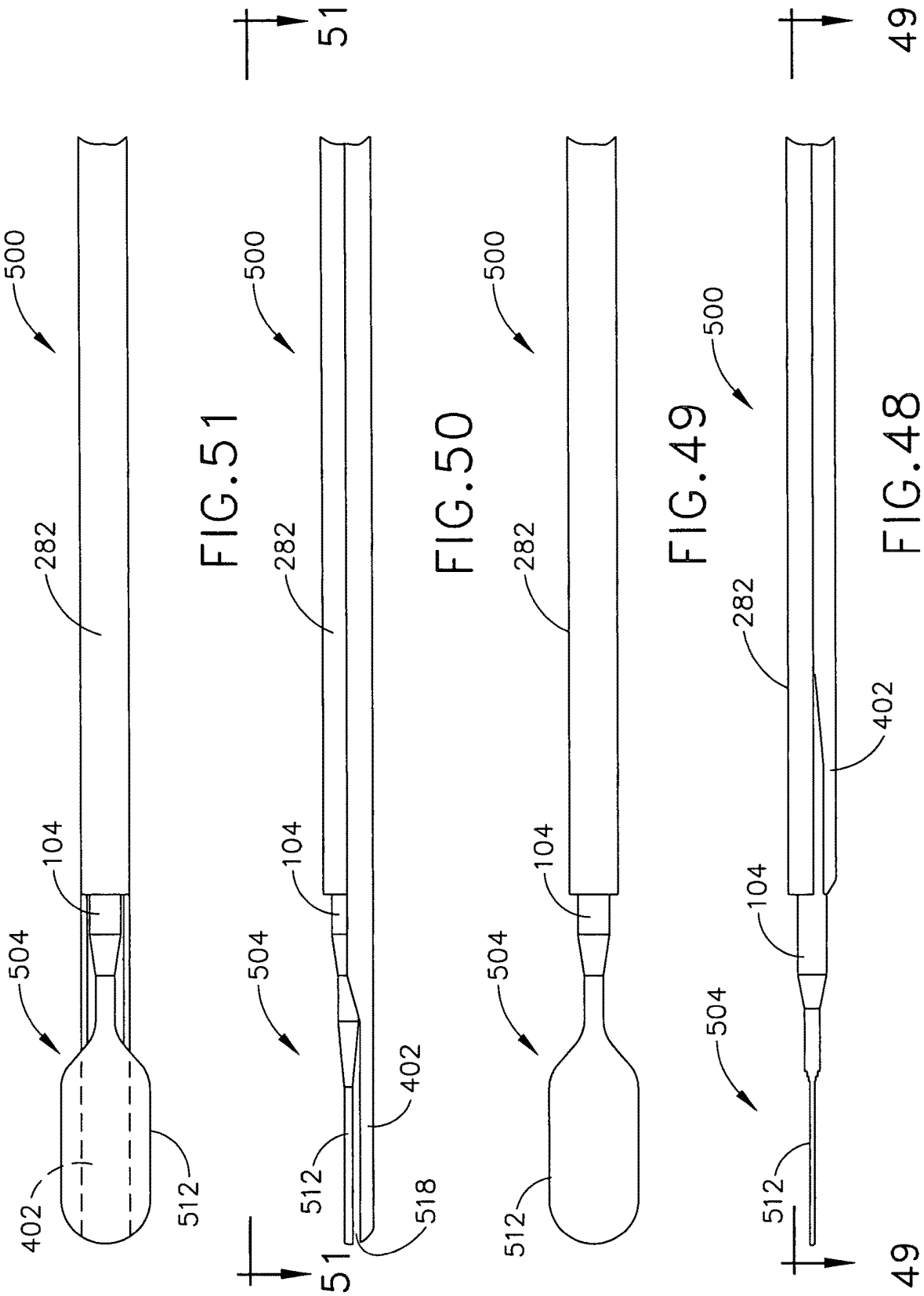

FIG.51

FIG.50

FIG.49

FIG.48

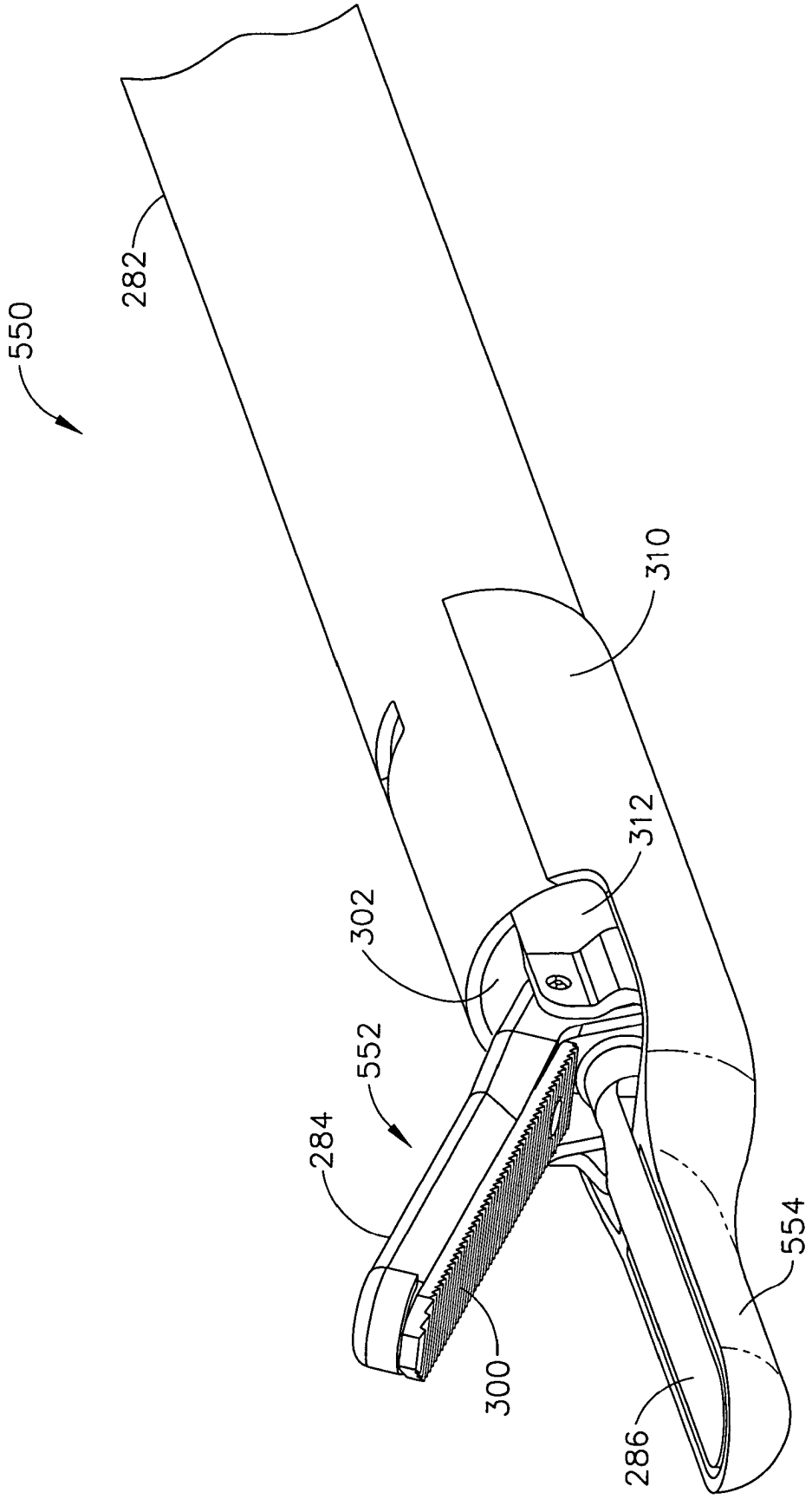

FIG. 52

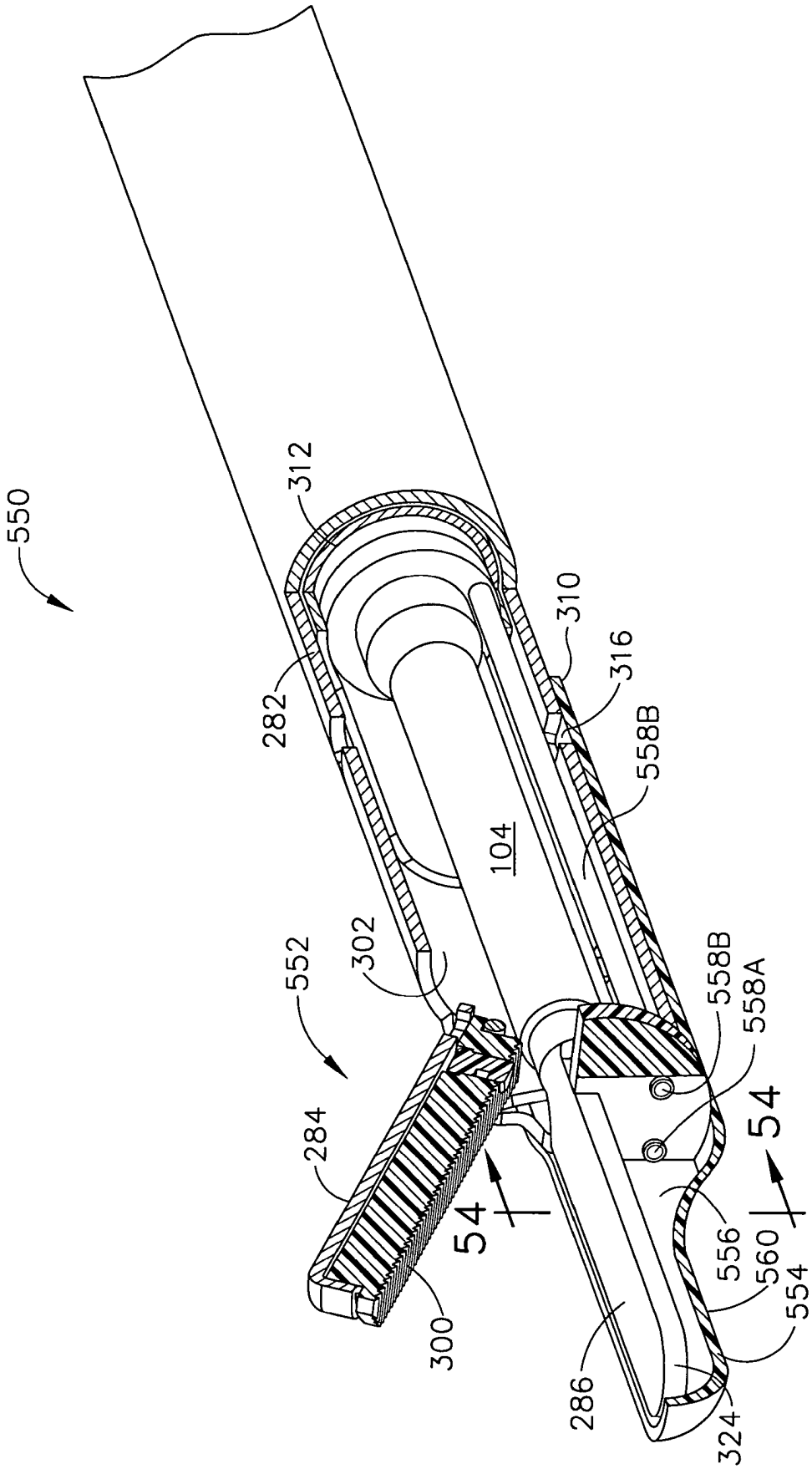
550
312
282
310
316
558B
104
552
302
558B
558A
284
54
54
556
560
554
300
286
324

FIG. 53

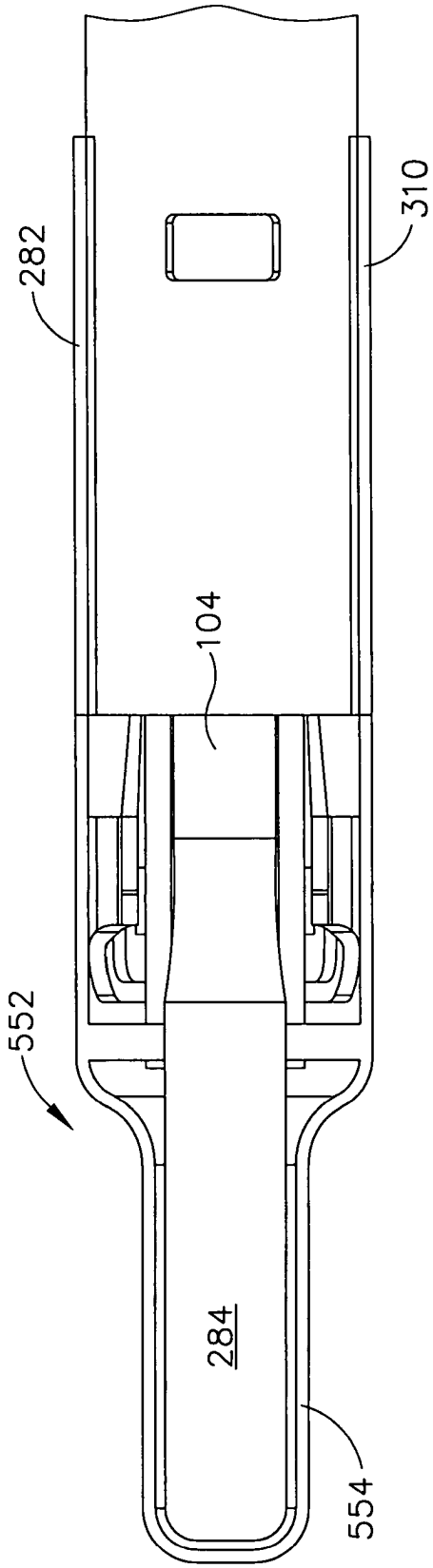
282
310
104
552
284
554

FIG. 55

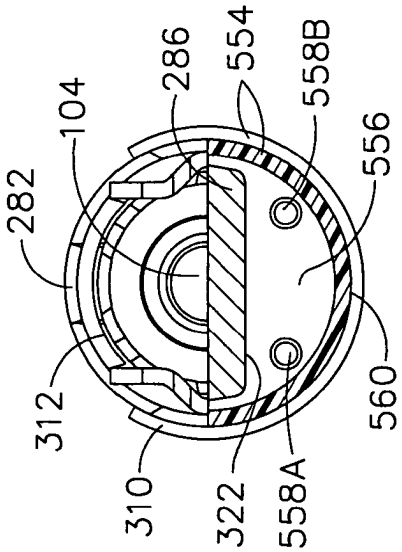
282
104
286
554
558B
556
312
310
322
558A
560

FIG. 54

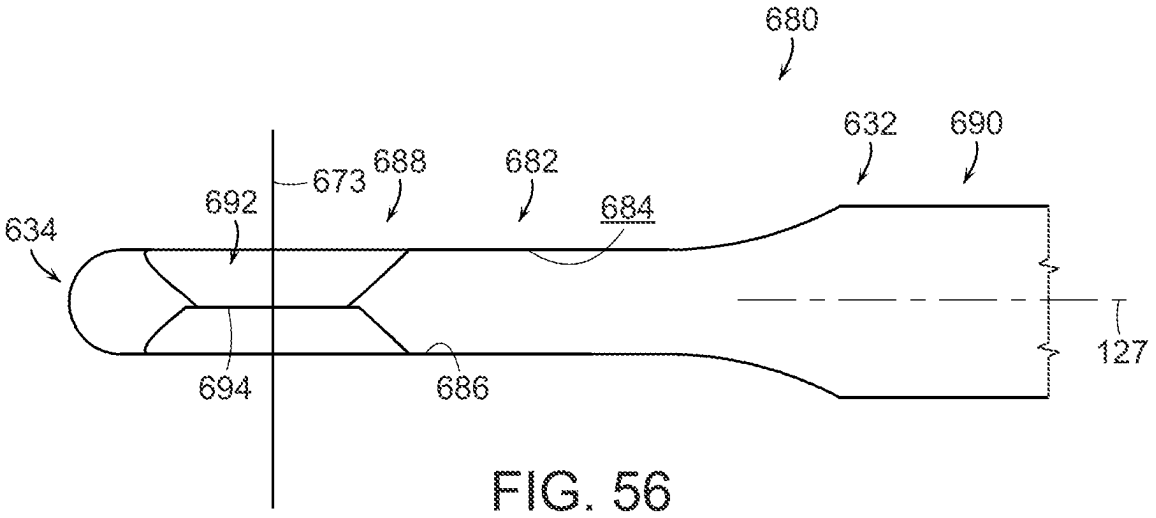
680
632
690
673
688
682
684
692
634
694
686
127

FIG. 56

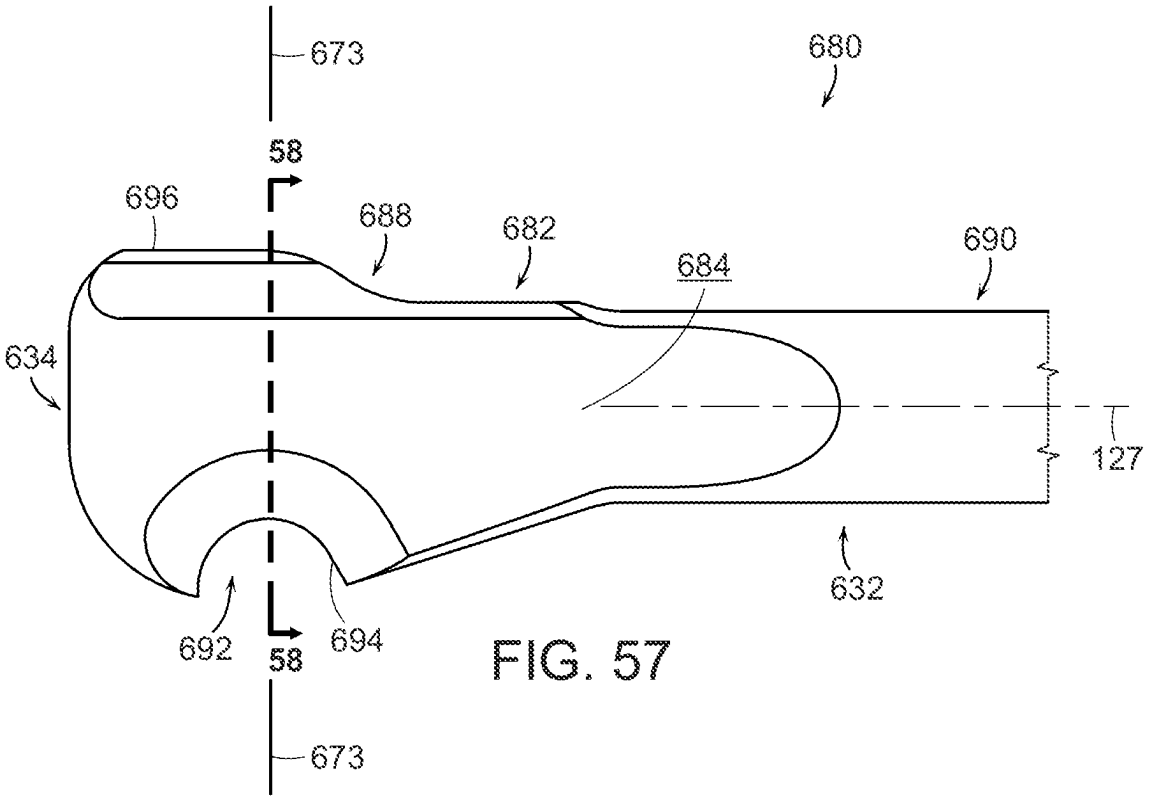
673
680
58
696
688
682
684
690
634
127
632
692
58
694
673

FIG. 57

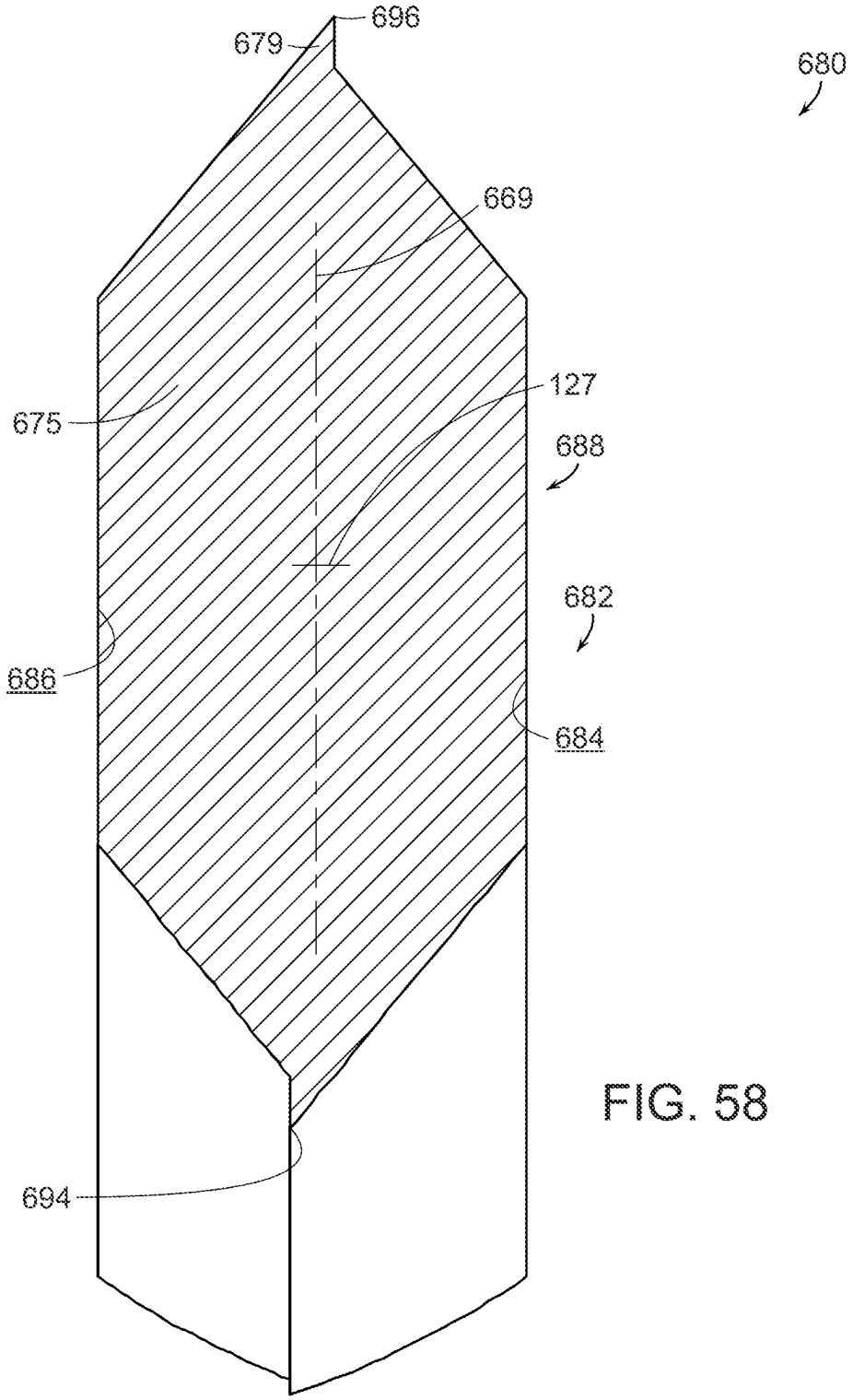

FIG. 58

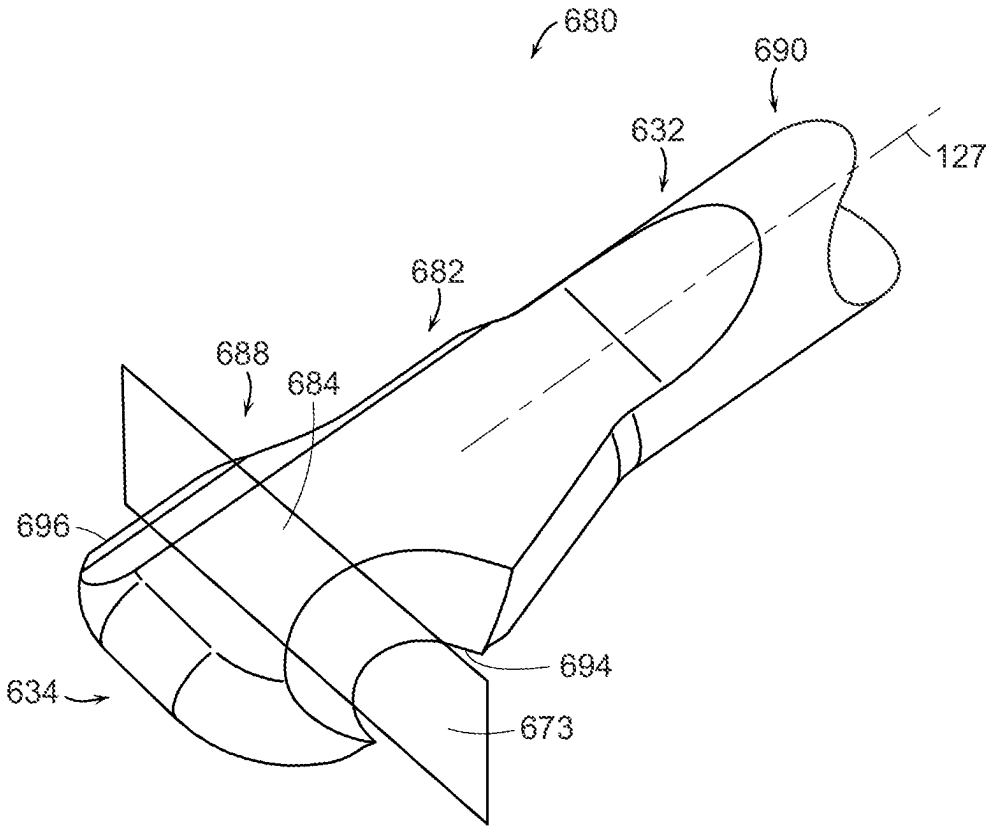

FIG. 59

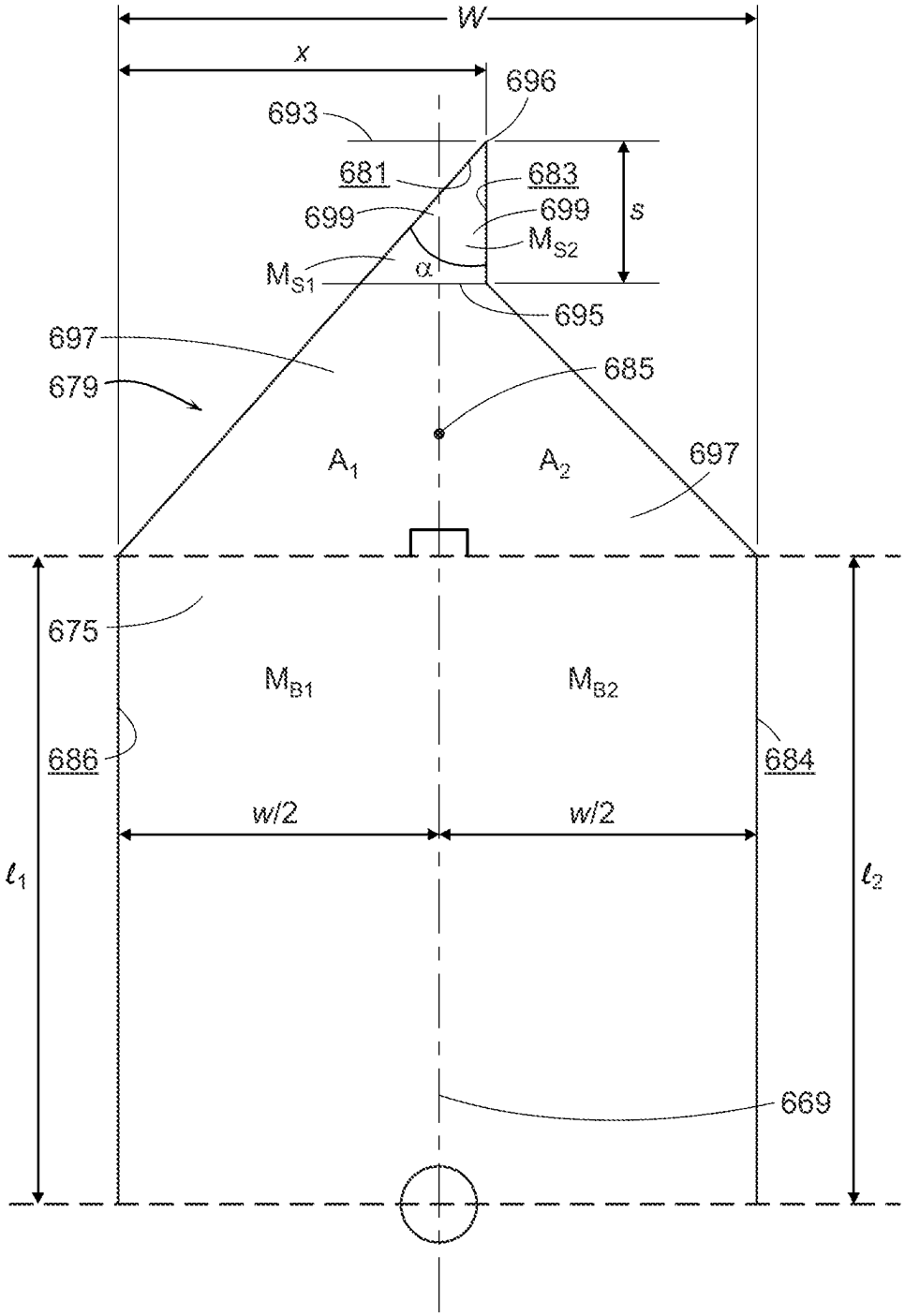
W
x
696
693
681
683
699
699
s
M_{S2}
M_{S1}
α
695
697
679
685
A_1
A_2
697
675
M_{B1}
M_{B2}
686
684
w/2
w/2
ℓ_1
ℓ_2
669

FIG. 60

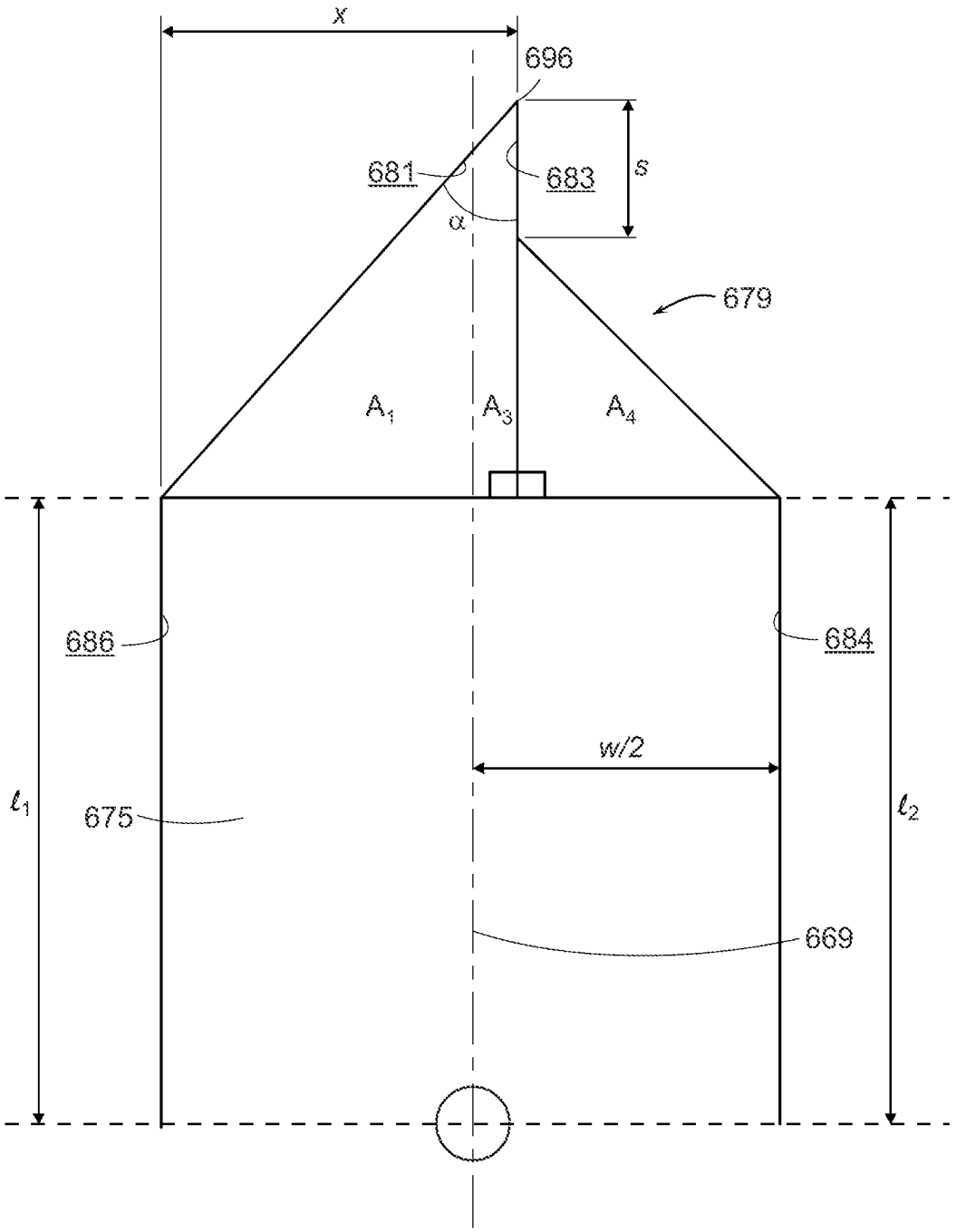

FIG. 60A

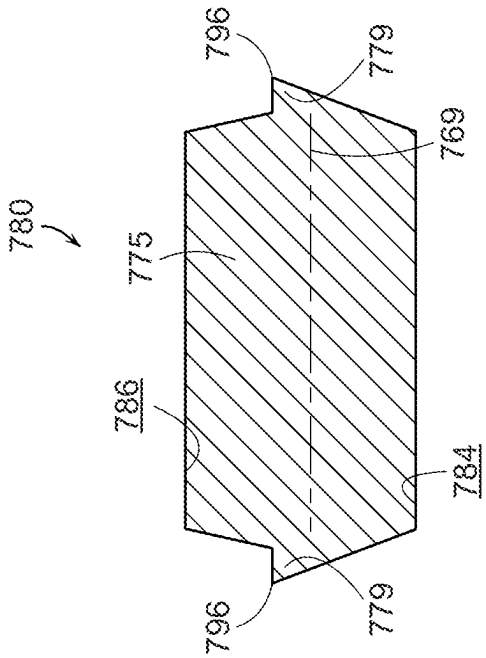

FIG. 61

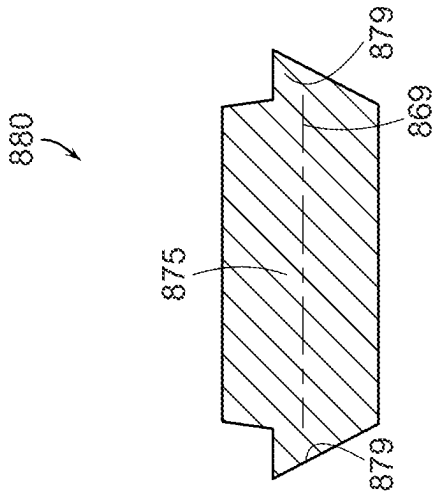

FIG. 62

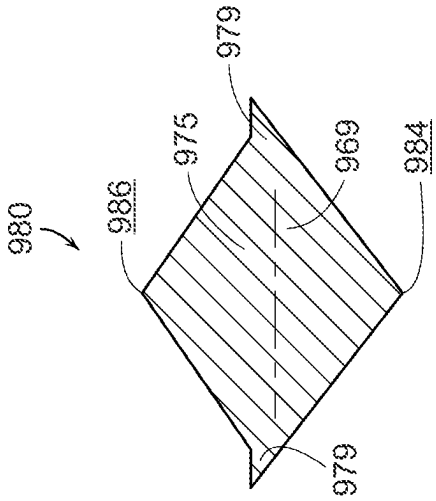

FIG. 63

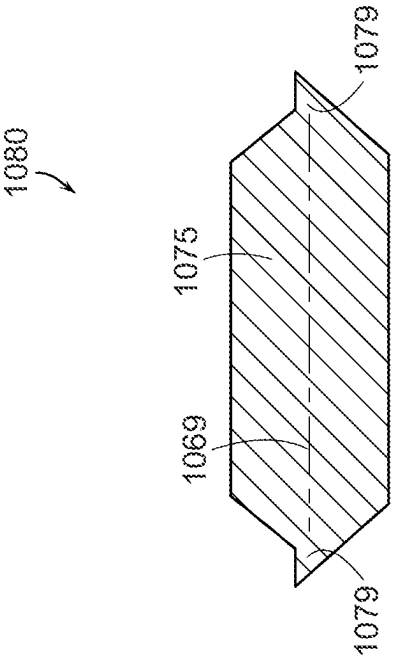

FIG. 64

ULTRASONIC SURGICAL INSTRUMENT BLADES

CROSS-REFERENCE TO RELATED APPLICATIONS

The present application is a continuation application claiming priority under 35 U.S.C. § 120 to U.S. patent application Ser. No. 16/577,307, filed Sep. 20, 2019, entitled ULTRASONIC SURGICAL INSTRUMENT BLADES, which issued on Sep. 20, 2019 as U.S. Pat. No. 11,266,433, which is a continuation application claiming priority under 35 U.S.C. § 120 to U.S. patent application Ser. No. 15/155,367, filed May 16, 2016, entitled ULTRASONIC SURGICAL INSTRUMENT BLADES, which issued on Oct. 15, 2019 as U.S. Pat. No. 10,441,308, which is a divisional application claiming priority under 35 U.S.C. § 121 to U.S. patent application Ser. No. 14/743,687, filed Jun. 18, 2015, entitled ULTRASONIC SURGICAL INSTRUMENT BLADES, which issued on May 17, 2016 as U.S. Pat. No. 9,339,289, which is a divisional application claiming priority under 35 U.S.C. § 121 to U.S. patent application Ser. No. 14/069,837, filed Nov. 1, 2013, entitled ULTRASONIC SURGICAL INSTRUMENT BLADES, which issued on Jun. 30, 2015 as U.S. Pat. No. 9,066,747, which is a divisional application claiming priority under 35 U.S.C. § 121 from U.S. patent application Ser. No. 13/270,459, filed on Oct. 11, 2011, entitled ULTRASONIC SURGICAL INSTRUMENT BLADES, which issued on Nov. 26, 2013 as U.S. Pat. No. 8,591,536, which is a divisional application claiming priority under 35 U.S.C. § 121 from U.S. patent application Ser. No. 11/998,543, filed on Nov. 30, 2007, entitled ULTRASONIC SURGICAL INSTRUMENT BLADES, which issued on Nov. 15, 2011 as U.S. Pat. No. 8,057,498, the entire disclosures of which are incorporated by reference herein.

BACKGROUND

Ultrasonic instruments, including both hollow core and solid core instruments, are used for the safe and effective treatment of many medical conditions. Ultrasonic instruments, and particularly solid core ultrasonic instruments, are advantageous because they may be used to cut and/or coagulate organic tissue using energy in the form of mechanical vibrations transmitted to a surgical end effector at ultrasonic frequencies. Ultrasonic vibrations, when transmitted to organic tissue at suitable energy levels and using a suitable end effector, may be used to cut, dissect, elevate or cauterize tissue or to separate muscle tissue off bone. Ultrasonic instruments utilizing solid core technology are particularly advantageous because of the amount of ultrasonic energy that may be transmitted from the ultrasonic transducer, through a waveguide, to the surgical end effector. Such instruments may be used for open procedures or minimally invasive procedures, such as endoscopic or laparoscopic procedures, wherein the end effector is passed through a trocar to reach the surgical site.

Activating or exciting the end effector (e.g., cutting blade) of such instruments at ultrasonic frequencies induces longitudinal vibratory movement that generates localized heat within adjacent tissue, facilitating both cutting and coagulation. Because of the nature of ultrasonic instruments, a particular ultrasonically actuated end effector may be designed to perform numerous functions, including, for example, cutting and coagulation.

Ultrasonic vibration is induced in the surgical end effector by electrically exciting a transducer, for example. The transducer may be constructed of one or more piezoelectric or magnetostrictive elements in the instrument hand piece. Vibrations generated by the transducer section are transmitted to the surgical end effector via an ultrasonic waveguide extending from the transducer section to the surgical end effector. The waveguides and end effectors are designed to resonate at the same frequency as the transducer. Therefore, when an end effector is attached to a transducer the overall system frequency is the same frequency as the transducer itself.

The amplitude of the longitudinal ultrasonic vibration at the tip, d, of the end effector behaves as a simple sinusoid at the resonant frequency as given by:

$$d = A\sin(\omega t)$$

where:

ω=the radian frequency which equals 2π times the cyclic frequency, f; and

A=the zero-to-peak amplitude.

The longitudinal excursion is defined as the peak-to-peak (p-t-p) amplitude, which is just twice the amplitude of the sine wave or 2A.

The shape of an ultrasonic surgical blade or end-effector used in an ultrasonic surgical instrument can define at least four important aspects of the instrument. These are: (1) the visibility of the end-effector and its relative position in the surgical field, (2) the ability of the end-effector to access or approach targeted tissue, (3) the manner in which ultrasonic energy is coupled to tissue for cutting and coagulation, and (4) the manner in which tissue can be manipulated with the ultrasonically inactive end-effector. It would be advantageous to provide an improved ultrasonic surgical instrument blade or end-effector optimizing at least these four aspects of the instrument.

However, as features are added to an ultrasonic surgical instrument blade to achieve the above-listed aspects, the shape of the blade is typically altered which creates asymmetries therein and causes the blade to become unbalanced, meaning that the blade can have the tendency to vibrate in directions other than the longitudinal direction along the length of the instrument, such as transverse directions. Substantial transverse motion in the blade and/or waveguide may lead to excess heat generation and/or premature stress failure therein. Long, thin ultrasonic waveguides, such as those used in instruments for minimally invasive surgery, are particularly susceptible to transverse vibrations introduced by imbalances, or asymmetries, in the end effector.

U.S. Pat. No. 6,283,981, which issued on Sep. 4, 2001 and is entitled METHOD OF BALANCING ASYMMETRIC ULTRASONIC SURGICAL BLADES, U.S. Pat. No. 6,309,400, which issued on Oct. 30, 2001 and is entitled CURVED ULTRASONIC BLADE HAVING A TRAPEZOIDAL CROSS SECTION, and U.S. Pat. No. 6,436,115, which issued on Aug. 20, 2002 and is entitled BALANCED ULTRASONIC BLADE INCLUDING A PLURALITY OF BALANCE ASYMMETRIES, the disclosures of which are hereby incorporated by reference herein, address balancing blades having asymmetries within a treatment portion of the blade by utilizing asymmetries within an adjacent balance portion. While such approaches have proven eminently

successful, there are some applications where balancing may be desirable within the treatment, or functional, portion of a blade.

Solid core ultrasonic surgical instruments may be divided into two types, single element end effector devices and multiple-element end effector. Single element end effector devices include instruments such as scalpels, and ball coagulators. Single-element end effector instruments have limited ability to apply blade-to-tissue pressure when the tissue is soft and loosely supported. Substantial pressure may be necessary to effectively couple ultrasonic energy to the tissue. This inability to grasp the tissue results in a further inability to fully coapt tissue surfaces while applying ultrasonic energy, leading to less-than-desired hemostasis and tissue joining. The use of multiple-element end effectors such as clamping coagulators includes a mechanism to press tissue against an ultrasonic blade that can overcome these deficiencies.

Ultrasonic clamp coagulators provide an improved ultrasonic surgical instrument for cutting/coagulating tissue, particularly loose and unsupported tissue, wherein the ultrasonic blade is employed in conjunction with a clamp for applying a compressive or biasing force to the tissue, whereby faster coagulation and cutting of the tissue, with less attenuation of blade motion, are achieved.

Surgical elevators are instruments used to help facilitate the elevation and removal of soft tissue during surgery. Surgical elevators are generally employed to separate muscle from bone. Cobb or curette type surgical elevators and used in spine surgery, especially to assist in posterior access in removing muscle tissue from bone. To remove muscle tissue from bone using conventional surgical elevators, the surgeon must exert a significant amount of force. This may cause premature fatigue. Also, using significant force on a conventional surgical elevator during this technique may increase the likelihood of error and unwanted tissue damage.

It would be desirable to provide an ultrasonic instrument comprising a surgical elevator blade to remove soft tissue such as muscle from bone and to perform additional surgical functions as well. Also, because ultrasonic frequencies induce longitudinal vibratory movements and generate localized heat within adjacent tissue it would be desirable to provide a protective material for the surgical elevator of such ultrasonic instrument. The protective material may reduce the possibility of blade breakage when in contact with bone or metal retractors and may decrease thermal spread from the back edge of the blade.

SUMMARY

In one general aspect, the various embodiments are directed to an ultrasonic surgical instrument that comprises a transducer configured to produce vibrations at a predetermined frequency. The transducer is configured to produce vibrations along a longitudinal axis at a predetermined frequency. An ultrasonic blade extends along the longitudinal axis and is coupled to the transducer. The ultrasonic blade includes a body having a proximal end and a distal end. The distal end is movable relative to the longitudinal axis by the vibrations produced by the transducer. The body includes a treatment region that extends from the proximal end to the distal end. The body includes a substantially flat broad top surface, a bottom surface, and a neck portion protruding from the proximal end adapted to couple to the transducer.

In at least one form of the invention, an ultrasonic surgical instrument can include an ultrasonically actuated blade or end effector having a treatment portion. In various embodiments, the blade can define a longitudinal axis and at least one axis which is transverse to the longitudinal axis. In at least one such embodiment, the transverse axis can lie within a plane which is perpendicular, or normal, to the longitudinal axis and can define a cross-section of the treatment portion. In various embodiments, such a cross-section can include a central portion and a step, wherein the step can extend from the central portion, wherein the central portion can comprise a width, and wherein the step can comprise a cutting edge. In at least one embodiment, the cutting edge can be defined by first and second surfaces which define an angle therebetween. In various embodiments, the position of the cutting edge and/or the angle between the cutting edge surfaces, for example, can be selected in order to balance the blade with respect to the transverse axis.

FIGURES

The novel features of the various embodiments are set forth with particularity in the appended claims. The various embodiments, however, both as to organization and methods of operation, together with further objects and advantages thereof, may best be understood by reference to the following description, taken in conjunction with the accompanying drawings as follows.

FIG. **1** illustrates one embodiment of an ultrasonic system.

FIG. **2** illustrates one embodiment of a connection union/joint for an ultrasonic instrument.

FIG. **3** illustrates an exploded perspective view of one embodiment of a sterile ultrasonic surgical instrument.

FIGS. **4-7** illustrate one embodiment of an ultrasonic blade, where:

FIG. **4** is a side view of one embodiment of an ultrasonic blade;

FIG. **5** is a top view of the ultrasonic blade shown in FIG. **4**;

FIG. **6** is a cross-sectional view of the ultrasonic blade taken along line **6-6** in FIG. **4**; and

FIG. **7** is a top perspective view of the ultrasonic blade shown in FIG. **4**.

FIGS. **8-11** illustrate one embodiment of an ultrasonic blade, where:

FIG. **8** is a side view of one embodiment of an ultrasonic blade;

FIG. **9** is a top view of the ultrasonic blade shown in FIG. **8**;

FIG. **10** is a cross-sectional view of the ultrasonic blade taken along line **10-10** in FIG. **8**; and

FIG. **11** is a top perspective view of the ultrasonic blade shown in FIG. **8**.

FIGS. **12-15** illustrate one embodiment of an ultrasonic blade, where:

FIG. **12** is a side view of one embodiment of an ultrasonic blade;

FIG. **13** is a top view of the ultrasonic blade shown in FIG. **12**;

FIG. **14** is a cross-sectional view of the ultrasonic blade taken along line **14-14** in FIG. **12**; and

FIG. **15** is a top perspective view of the ultrasonic blade shown in FIG. **12**.

FIGS. **16-19** illustrate one embodiment of an ultrasonic blade, where:

FIG. **16** is a side view of one embodiment of an ultrasonic blade;

FIG. **17** is a top view of the ultrasonic blade shown in FIG. **16**;

FIG. **18** is an end-sectional view of the ultrasonic blade taken along line **18-18** in FIG. **16**; and

FIG. **19** is a top perspective view of the ultrasonic blade shown in FIG. **16**.

FIG. **20** is a top perspective view of one embodiment of an ultrasonic blade.

FIG. **21** illustrates a use of one embodiment of the ultrasonic blade shown in FIG. **20**.

FIGS. **22-24** illustrate one embodiment of an ultrasonic blade comprising a protective sheath, where:

FIG. **22** illustrates a partial cross-sectional view of one embodiment of an ultrasonic blade comprising a protective sheath taken along the longitudinal axis;

FIG. **23** is a bottom view of the ultrasonic blade taken along line **23-23** in FIG. **22**; and

FIG. **24** is a cross-sectional view of the ultrasonic blade and the protective sheath shown in FIG. **22**.

FIG. **25** illustrates a use of one embodiment of an ultrasonic surgical instrument removing muscle tissue from bone.

FIG. **26** illustrates a use one embodiment of the ultrasonic surgical blade shown in FIGS. **20**, **21** comprising one embodiment of a protective sheath.

FIGS. **27-31** illustrate one embodiment of an ultrasonic surgical instrument comprising an end effector, where:

FIG. **27** is a top perspective view of one embodiment of an ultrasonic surgical instrument;

FIG. **28** is a cross-sectional view of the ultrasonic surgical instrument shown in FIG. **27** taken along the longitudinal axis of the ultrasonic surgical instrument shown in FIG. **27**;

FIG. **29** is a bottom view of the ultrasonic surgical instrument taken along lines **29-29** in FIG. **28**;

FIG. **30** is a cross-sectional view of the ultrasonic surgical instrument taken along lines **30-30** in FIG. **28**; and

FIG. **31** is cross-sectional view of the ultrasonic surgical instrument taken along lines **31-31** in FIG. **28**.

FIGS. **32-35** are cross-sectional views of various embodiments of ultrasonic surgical instruments taken along the longitudinal axis.

FIGS. **36-37** are cross-sectional views of one embodiment of an ultrasonic surgical instrument taken along the longitudinal axis.

FIGS. **38-39** are cross-sectional views of one embodiment of an ultrasonic surgical instrument taken along the longitudinal axis.

FIG. **40** is cross-sectional view of one embodiment of an ultrasonic surgical instrument taken along the longitudinal axis.

FIGS. **41-43** illustrate one embodiment of an ultrasonic system, where:

FIG. **41** is a side view of one embodiment of the ultrasonic system;

FIG. **42** is a cross-sectional side view of the ultrasonic system shown in FIG. **41** and a cross-sectional view of various tube assemblies to couple the hand piece housing with an end effector;

FIG. **43** is a bottom cross-sectional view of the ultrasonic instrument shown in FIG. **41**.

FIGS. **44-51** illustrate one embodiment of an ultrasonic system, where:

FIG. **44** is a side view of one embodiment of a ultrasonic instrument with a deployable protective sheath in a stowed or retracted position;

FIG. **45** is a top view of the ultrasonic instrument with the deployable protective sheath in the stowed or retracted position taken along line **45-45** in FIG. **44**;

FIG. **46** is a side view of the ultrasonic instrument shown in FIG. **44** with the deployable protective sheath in a deployed position;

FIG. **47** is a top view of the ultrasonic instrument in the deployed position taken along line **47-47** in FIG. **46**;

FIG. **48** is a more detailed side view of the ultrasonic instrument shown in FIG. **44** with the deployable protective sheath in a stowed or retracted position;

FIG. **49** is a more detailed top view of the ultrasonic instrument shown in FIG. **45** with the protective sheath in the stowed or retracted position taken along line **49-49** in FIG. **48**;

FIG. **50** is a more detailed side view of the ultrasonic instrument shown in FIG. **46** with the deployable protective sheath in a deployed position; and

FIG. **51** is a more detailed top view of the ultrasonic instrument shown in FIG. **47** in the deployed position taken along line **51-51** in FIG. **50**.

FIGS. **52-55** illustrate one embodiment of an ultrasonic surgical instrument comprising an end effector, where:

FIG. **52** is a top perspective view of one embodiment of an ultrasonic surgical instrument;

FIG. **53** is a partial cross-sectional view of the ultrasonic surgical instrument shown in FIG. **52** taken along the longitudinal axis of the ultrasonic surgical instrument;

FIG. **54** is a cross-sectional view of the ultrasonic surgical instrument taken along lines **54-54** shown in FIG. **53**; and

FIG. **55** is a top view of the ultrasonic surgical instrument.

FIGS. **56-59** illustrate one embodiment of an ultrasonic blade, where:

FIG. **56** is a side view of one embodiment of an ultrasonic blade;

FIG. **57** is a top view of the ultrasonic blade shown in FIG. **56**;

FIG. **58** is a cross-sectional view of the ultrasonic blade taken along line **58-58** in FIG. **57**; and

FIG. **59** is a top perspective view of the ultrasonic blade shown in FIG. **56**.

FIG. **60** is a schematic of parameters of a cross-section of a blade which can be used to balance the blade.

FIG. **60**A is an additional schematic of the cross-section of FIG. **60**

FIG. **61** is a cross-sectional view of an ultrasonic blade.

FIG. **62** is a cross-sectional view of another ultrasonic blade.

FIG. **63** is a cross-sectional view of an additional ultrasonic blade.

FIG. **64** is a cross-sectional view of a further ultrasonic blade.

DESCRIPTION

Before explaining the various embodiments in detail, it should be noted that the embodiments are not limited in its application or use to the details of construction and arrangement of parts illustrated in the accompanying drawings and description. The illustrative embodiments may be implemented or incorporated in other embodiments, variations and modifications, and may be practiced or carried out in various ways. For example, the surgical instruments and blade configurations disclosed below are illustrative only

and not meant to limit the scope or application thereof. Furthermore, unless otherwise indicated, the terms and expressions employed herein have been chosen for the purpose of describing the illustrative embodiments for the convenience of the reader and are not to limit the scope thereof.

The various embodiments relate, in general, to ultrasonic surgical blades for use in surgical instruments and, more particularly, to an ultrasonic surgical blade with improved elevator, cutting and coagulation features and to an ultrasonic blade comprising a protective sheath on a portion thereof. The various embodiments relate, in general, to ultrasonic surgical blades and instruments for improved bone and tissue removal, aspiration, and coagulation features. A blade according to various embodiments is of particular benefit, among others, in orthopedic procedures wherein it is desirable to remove cortical bone and/or tissue while controlling bleeding for removing muscle tissue from bone, due to its cutting and coagulation characteristics. The blade, however, may be useful for general soft tissue cutting and coagulation. The blade may be straight or curved, and useful for either open or laparoscopic applications. A blade according to various embodiments may be useful in spine surgery, especially to assist in posterior access in removing muscle from bone. A blade according to the various embodiments may reduce the user force required to remove muscle from bone and, in one embodiment, may be useful to simultaneously hemostatically seal or cauterize the tissue. Reducing the force to operate the surgical instrument may reduce user fatigue, improve precision and reduce unwanted tissue damage. A variety of different blade configurations are disclosed which may be useful for both open and laparoscopic applications.

Examples of ultrasonic surgical instruments are disclosed in U.S. Pat. Nos. 5,322,055 and 5,954,736 and in combination with ultrasonic blades and surgical instruments disclosed in U.S. Pat. Nos. 6,309,400 B2, 6,278,218 B1, 6,283,981 B1, and 6,325,811 B1, for example, are incorporated herein by reference in their entirety. Also incorporated by reference in its entirety is commonly-owned, co-pending U.S. patent application Ser. No. 11/726,625, entitled ULTRASONIC SURGICAL INSTRUMENTS, filed on Mar. 22, 2007, now U.S. Pat. No. 8,911,460. Some of these references disclose ultrasonic surgical instrument design and blade designs where a longitudinal node of the blade is excited. Because of asymmetry or asymmetries, these blades exhibit transverse and/or torsional motion where the characteristic "wavelength" of this non-longitudinal motion is less than that of the general longitudinal motion of the blade and its extender portion. Therefore, the wave shape of the non-longitudinal motion will present nodal positions of transverse/torsional motion along the tissue effector while the net motion of the active blade along its tissue effector is non-zero (i.e. will have at least longitudinal motion along the length extending from its distal end, an antinode of longitudinal motion, to the first nodal position of longitudinal motion that is proximal to the tissue effector portion). Certain exemplary embodiments will now be described to provide an overall understanding of the principles of the structure, function, manufacture, and use of the devices and methods disclosed herein. One or more examples of these embodiments are illustrated in the accompanying drawings. Those of ordinary skill in the art will understand that the devices and methods specifically described herein and illustrated in the accompanying drawings are non-limiting exemplary embodiments and that the scope of the various embodiments is defined solely by the claims. The features illustrated or described in connection with one exemplary embodiment may be combined with the features of other embodiments. Such modifications and variations are intended to be included within the scope of the claims.

FIG. **1** illustrates one embodiment of an ultrasonic system **10**. One embodiment of the ultrasonic system **10** comprises an ultrasonic signal generator **12** coupled to an ultrasonic transducer **14**, a hand piece assembly **60** comprising a hand piece housing **16**, and an end effector **50**. The ultrasonic transducer **14**, which is known as a "Langevin stack", generally includes a transduction portion **18**, a first resonator or end-bell **20**, and a second resonator or fore-bell **22**, and ancillary components. The ultrasonic transducer **14** is preferably an integral number of one-half system wavelengths ($n\lambda/2$) in length as will be described in more detail later. An acoustic assembly **24** includes the ultrasonic transducer **14**, a mount **26**, a velocity transformer **28**, and a surface **30**.

It will be appreciated that the terms "proximal" and "distal" are used herein with reference to a clinician gripping the hand piece assembly **60**. Thus, the end effector **50** is distal with respect to the more proximal hand piece assembly **60**. It will be further appreciated that, for convenience and clarity, spatial terms such as "top" and "bottom" also are used herein with respect to the clinician gripping the hand piece assembly **60**. However, surgical instruments are used in many orientations and positions, and these terms are not intended to be limiting and absolute.

The distal end of the end-bell **20** is connected to the proximal end of the transduction portion **18**, and the proximal end of the fore-bell **22** is connected to the distal end of the transduction portion **18**. The fore-bell **22** and the end-bell **20** have a length determined by a number of variables, including the thickness of the transduction portion **18**, the density and modulus of elasticity of the material used to manufacture the end-bell **20** and the fore-bell **22**, and the resonant frequency of the ultrasonic transducer **14**. The fore-bell **22** may be tapered inwardly from its proximal end to its distal end to amplify the ultrasonic vibration amplitude as the velocity transformer **28**, or alternately may have no amplification. A suitable vibrational frequency range may be about 20 Hz to 120 kHz and a well-suited vibrational frequency range may be about 30-70 kHz and one example operational vibrational frequency may be approximately 55.5 kHz.

Piezoelectric elements **32** may be fabricated from any suitable material, such as, for example, lead zirconate-titanate, lead meta-niobate, lead titanate, or other piezoelectric crystal material. Each of positive electrodes **34**, negative electrodes **36**, and the piezoelectric elements **32** has a bore extending through the center. The positive and negative electrodes **34** and **36** are electrically coupled to wires **38** and **40**, respectively. The wires **38** and **40** are encased within a cable **42** and electrically connectable to the ultrasonic signal generator **12** of the ultrasonic system **10**.

The ultrasonic transducer **14** of the acoustic assembly **24** converts the electrical signal from the ultrasonic signal generator **12** into mechanical energy that results in primarily longitudinal vibratory motion of the ultrasonic transducer **24** and the end effector **50** at ultrasonic frequencies. A suitable generator is available as model number GEN01, from Ethicon Endo-Surgery, Inc., Cincinnati, Ohio. When the acoustic assembly **24** is energized, a vibratory motion standing wave is generated through the acoustic assembly **24**. The amplitude of the vibratory motion at any point along the acoustic assembly **24** may depend upon the location along the acoustic assembly **24** at which the vibratory motion is measured. A minimum or zero crossing in the vibratory

motion standing wave is generally referred to as a node (i.e., where motion is usually minimal), and an absolute value maximum or peak in the standing wave is generally referred to as an anti-node (i.e., where motion is usually maximal). The distance between an anti-node and its nearest node is one-quarter wavelength (λ/4).

The wires **38** and **40** transmit an electrical signal from the ultrasonic signal generator **12** to the positive electrodes **34** and the negative electrodes **36**. The piezoelectric elements **32** are energized by the electrical signal supplied from the ultrasonic signal generator **12** in response to a foot switch **44** to produce an acoustic standing wave in the acoustic assembly **24**. The electrical signal causes disturbances in the piezoelectric elements **32** in the form of repeated small displacements resulting in large compression forces within the material. The repeated small displacements cause the piezoelectric elements **32** to expand and contract in a continuous manner along the axis of the voltage gradient, producing longitudinal waves of ultrasonic energy. The ultrasonic energy is transmitted through the acoustic assembly **24** to the end effector **50** via a an ultrasonic transmission waveguide **104**.

In order for the acoustic assembly **24** to deliver energy to the end effector **50**, all components of the acoustic assembly **24** must be acoustically coupled to the end effector **50**. The distal end of the ultrasonic transducer **14** may be acoustically coupled at the surface **30** to the proximal end of the ultrasonic transmission waveguide **104** by a threaded connection such as a stud **48**.

The components of the acoustic assembly **24** are preferably acoustically tuned such that the length of any assembly is an integral number of one-half wavelengths (nλ/2), where the wavelength λ is the wavelength of a pre-selected or operating longitudinal vibration drive frequency fa of the acoustic assembly **24**, and where n is any positive integer. It is also contemplated that the acoustic assembly **24** may incorporate any suitable arrangement of acoustic elements.

The ultrasonic end effector **50** may have a length substantially equal to an integral multiple of one-half system wavelengths (λ/2). A distal end **52** of the ultrasonic end effector **50** may be disposed near an antinode in order to provide the maximum longitudinal excursion of the distal end. When the transducer assembly is energized, the distal end **52** of the ultrasonic end effector **50** may be configured to move in the range of, for example, approximately 10 to 500 microns peak-to-peak, and preferably in the range of about 30 to 150 microns at a predetermined vibrational frequency.

The ultrasonic end effector **50** may be coupled to the ultrasonic transmission waveguide **104**. The ultrasonic end effector **50** and the ultrasonic transmission guide **104** as illustrated are formed as a single unit construction from a material suitable for transmission of ultrasonic energy such as, for example, Ti6Al4V (an alloy of Titanium including Aluminum and Vanadium), Aluminum, Stainless Steel, or other known materials. Alternately, the ultrasonic end effector **50** may be separable (and of differing composition) from the ultrasonic transmission waveguide **104**, and coupled by, for example, a stud, weld, glue, quick connect, or other suitable known methods. The ultrasonic transmission waveguide **104** may have a length substantially equal to an integral number of one-half system wavelengths (λ/2), for example. The ultrasonic transmission waveguide **104** may be preferably fabricated from a solid core shaft constructed out of material that propagates ultrasonic energy efficiently, such as titanium alloy (i.e., Ti-6Al-4V) or an aluminum alloy, for example.

The ultrasonic transmission waveguide **104** comprises a longitudinally projecting attachment post **54** at a proximal end to couple to the surface **30** of the ultrasonic transmission waveguide **104** by a threaded connection such as the stud **48**. In the embodiment illustrated in FIG. **1**, the ultrasonic transmission waveguide **104** comprises a plurality of stabilizing silicone rings or compliant supports **56** positioned at a plurality of nodes. The silicone rings **56** dampen undesirable vibration and isolate the ultrasonic energy from a removable sheath **58** assuring the flow of ultrasonic energy in a longitudinal direction to the distal end **52** of the end effector **50** with maximum efficiency.

As shown in FIG. **1**, the removable sheath **58** is coupled to the distal end of the handpiece assembly **60**. The sheath **58** generally includes an adapter or nose cone **62** and an elongated tubular member **64**. The tubular member **64** is attached to the adapter **62** and has an opening extending longitudinally therethrough. The sheath **58** may be threaded or snapped onto the distal end of the housing **16**. The ultrasonic transmission waveguide **104** extends through the opening of the tubular member **64** and the silicone rings **56** isolate the ultrasonic transmission waveguide **104** therein.

The adapter **62** of the sheath **58** is preferably constructed from Ultem®, and the tubular member **64** is fabricated from stainless steel. Alternatively, the ultrasonic transmission waveguide **104** may have polymeric material surrounding it to isolate it from outside contact.

The distal end of the ultrasonic transmission waveguide **104** may be coupled to the proximal end of the end effector **50** by an internal threaded connection, preferably at or near an antinode. It is contemplated that the end effector **50** may be attached to the ultrasonic transmission waveguide **104** by any suitable means, such as a welded joint or the like. Although the end effector **50** may be detachable from the ultrasonic transmission waveguide **104**, it is also contemplated that the end effector **50** and the ultrasonic transmission waveguide **104** may be formed as a single unitary piece.

FIG. **2** illustrates one embodiment of a connection union/joint **70** for an ultrasonic instrument. The connection union/joint **70** may be formed between the attachment post **54** of the ultrasonic transmission waveguide **104** and the surface **30** of the velocity transformer **28** at the distal end of the acoustic assembly **24**. The proximal end of the attachment post **54** comprises a female threaded substantially cylindrical recess **66** to receive a portion of the threaded stud **48** therein. The distal end of the velocity transformer **28** also may comprise a female threaded substantially cylindrical recess **68** to receive a portion of the threaded stud **40**. The recesses **66**, **68** are substantially circumferentially and longitudinally aligned.

FIG. **3** illustrates an exploded perspective view of one embodiment of a sterile ultrasonic surgical instrument **100**. The ultrasonic surgical instrument **100** may be employed with the above-described ultrasonic system **10**. However, as described herein, those of ordinary skill in the art will understand that the various embodiments of the ultrasonic surgical instruments disclosed herein as well as any equivalent structures thereof could conceivably be effectively used in connection with other known ultrasonic surgical instruments without departing from the scope thereof. Thus, the protection afforded to the various ultrasonic surgical blade embodiments disclosed herein should not be limited to use only in connection with the exemplary ultrasonic surgical instrument described above.

The ultrasonic surgical instrument **100** may be sterilized by methods known in the art such as, for example, gamma radiation sterilization, Ethelyne Oxide processes, autoclav-

ing, soaking in sterilization liquid, or other known processes. In the illustrated embodiment, an ultrasonic transmission assembly **102** includes an ultrasonic end effector, the generally designated ultrasonic end effector **50**, and the ultrasonic transmission waveguide **104**. The ultrasonic end effector **50** and the ultrasonic transmission waveguide **104** are illustrated as a single unit construction from a material suitable for transmission of ultrasonic energy such as, for example, Ti6Al4V (an alloy of Titanium including Aluminum and Vanadium), Aluminum, Stainless Steel, or other known materials. Alternately, the ultrasonic end effector **50** may be separable (and of differing composition) from the ultrasonic transmission waveguide **104**, and coupled by, for example, a stud, weld, glue, quick connect, or other known methods. The ultrasonic transmission waveguide **104** may have a length substantially equal to an integral number of one-half system wavelengths ($n\lambda/2$), for example. The ultrasonic transmission waveguide **104** may be preferably fabricated from a solid core shaft constructed out of material that propagates ultrasonic energy efficiently, such as titanium alloy (i.e., Ti-6Al-4V) or an aluminum alloy, for example.

In the embodiment illustrated in FIG. **3**, the ultrasonic transmission waveguide **104** is positioned in an outer sheath **106** by a mounting O-ring **108** and a sealing ring **110**. One or more additional dampers or support members (not shown) also may be included along the ultrasonic transmission waveguide **104**. The ultrasonic transmission waveguide **104** is affixed to the outer sheath **106** by a mounting pin **112** that passes through mounting holes **114** in the outer sheath **106** and a mounting slot **116** in the ultrasonic transmission waveguide **104**.

FIGS. **4-19** illustrate various embodiments of ultrasonic blades, which may be considered different embodiments of the end effector **50** and are generally well-suited for cutting, coagulating, and reshaping tissue. In various embodiments, the ultrasonic blades may be configured as ultrasonic surgical elevator blades that are well-suited for separating muscle from bone, for example. The ultrasonic blades may be employed in the above-described ultrasonic surgical instruments **10**, **100**. Embodiments of the ultrasonic blades may be suitable in spine surgery, and more particularly, to assist in posterior access in removing muscle tissue from bone and coagulating the tissue. Accordingly, the ultrasonic blades may be employed to simultaneously reshape or remove muscle tissue from bone and to hemostatically seal the tissue as it is removed from the bone. The ultrasonic energy assists the cutting action of the ultrasonic blade and reduces the force required by a surgeon during an operation and thereby reduces surgeon fatigue, improves precision, and reduces unwanted tissue damage. The embodiments, however, are not limited in this context. Those skilled in the art will appreciate that although the various embodiments of the ultrasonic blades are well-suited for cutting, coagulating, and reshaping tissue, e.g., to separate muscle tissue from bone, these ultrasonic blades are multifunctional and may be employed in multiple numerous applications.

FIGS. **4-7** illustrate one embodiment of an ultrasonic blade **120**. The ultrasonic blade **120** is generally well-suited for cutting, coagulating, and reshaping tissue. In one embodiment the ultrasonic blade **120** may be configured as an ultrasonic surgical elevator blade generally well-suited to separate muscle tissue from bone. Nevertheless, the ultrasonic blade **120** may be employed in various other therapeutic procedures. FIG. **4** is a side view of the ultrasonic blade **120**. FIG. **5** is a top view of the ultrasonic blade **120**. FIG. **6** is a cross-sectional view of the ultrasonic blade **120** taken along line **6-6** in FIG. **4**. FIG. **7** is a top perspective view of the ultrasonic blade **120**.

In the embodiment illustrated in FIGS. **4-7**, the ultrasonic blade **120** comprises a blade body **122** having a generally flat top surface **124** that is substantially arcuate about a first axis **121** and a smooth generally round bottom surface **126** that is substantially arcuate about a second axis **123**. As shown in the cross-sectional view of FIG. **6**, the top surface **124** is generally flat and the bottom surface **126** is substantially arcuate with respect to a third axis **125**. The blade body **122** extends along a longitudinal central axis **127**. The blade body **122** may comprise a substantially elongated treatment region, generally designated as **128**, and a neck or transition portion **130** that protrudes from a proximal end **132** of the treatment region **128**. The neck portion **130** may be attached to the ultrasonic transmission waveguide **104** by a stud, weld, glue, quick connect, or other known attachment methods, for example. In alternative embodiments, the ultrasonic blade **120** and the ultrasonic transmission waveguide **104** may be formed as a single unitary body. In either configuration, the ultrasonic transmission waveguide **104** amplifies the mechanical vibrations transmitted to the ultrasonic blade **120** as is well known in the art. The ultrasonic blade **120** is adapted to couple to the ultrasonic surgical instrument **100**, which may be employed with the above-described ultrasonic surgical instruments **10**, **100**.

The ultrasonic blade **120** comprises a treatment region **128** to effect tissue, such as, for example, cut, coagulate, reshape, scrape, and remove tissue. The treatment region **128** comprises the top surface **124** which is substantially arcuate about the first axis **121** and the smooth bottom surface **126** which is substantially arcuate about the second axis **123**. As shown in the cross-sectional view in FIG. **6**, the treatment region **128** the top surface **124** is generally flat and the bottom surface **126** is substantially arcuate about the third axis **125**. A distal end **134** of the treatment region **128** also comprises a substantially flat tip with a cutting edge **136**. The blade **120** and the distal cutting edge **136** define a broad top surface **124** for effecting tissue. The bottom surface **126** may be a surface for bone contact and atraumatic use along the bone region configured to prevent the cutting edge **136** from cutting into bone tissue. Due to its arcuate shape the bottom surface **126** may be employed to coagulate tissue. The top surface **124** of the blade **120** has a width "W" that is substantially greater than a thickness "T" of the blade **120**. Additional cutting edges **138** may be positioned laterally along both sides of the treatment region **128**. In one embodiment, the cutting edges **138** extend from the proximal end **132** to the distal end **134** of the treatment region **128**. In one example, the flat tip cutting edge **136** or the lateral cutting edges **138** of the ultrasonic blade **120** are suitable to remove muscle tissue from bone while the smooth generally round substantially arcuate bottom surface **126** acts as an atraumatic surface that glides against the bone.

The ultrasonic blade **120** may be fabricated from a material suitable for transmission of ultrasonic energy such as, for example, Ti6Al4V (an alloy of Titanium including Aluminum and Vanadium), Aluminum, Stainless Steel, or other known materials.

FIGS. **8-11** illustrate one embodiment of an ultrasonic blade **150**. The ultrasonic blade **150** is generally well-suited for cutting, coagulating, and reshaping tissue. In one embodiment the ultrasonic blade **150** may be configured as an ultrasonic surgical elevator blade generally well-suited to separate muscle tissue from bone. Nevertheless, the ultrasonic blade **150** may be employed in various other thera-

peutic procedures. FIG. **8** is a side view of the ultrasonic blade **150**. FIG. **9** is a top view of the ultrasonic blade **150**. FIG. **10** is a cross-sectional view of the ultrasonic blade **150** taken along line **10-10** in FIG. **8**. FIG. **11** is a top perspective view of the ultrasonic blade **150**.

In the embodiment illustrated in FIGS. **8-11**, the ultrasonic blade **150** comprises a blade body **152** having a generally flat planar top surface **154** and a smooth substantially arcuate bottom surface **156**. The top and bottom surfaces **154**, **56** extend along the longitudinal central axis **127**. As shown in the cross-sectional view of FIG. **10**, the top surface **154** is generally flat and planar and the bottom surface **156** is substantially arcuate about axis **129**. The blade body **152** may comprise a substantially elongated treatment region, generally designated as **158**, and a neck or transition portion **160** that protrudes from a proximal end **132** of the treatment region **158**. The neck portion **160** may be attached to the ultrasonic transmission waveguide **104** by a stud, weld, glue, quick connect, or other known attachment methods, for example. In alternative embodiments, the ultrasonic blade **150** and the waveguide **104** may be formed as a single unitary body. In either configuration, the ultrasonic transmission waveguide **104** amplifies the mechanical vibrations transmitted to the ultrasonic blade **150** as is well known in the art. The ultrasonic blade **150** is adapted to couple to the ultrasonic surgical instrument **100**, which may be coupled to above-described ultrasonic system **10**. In one embodiment, the ultrasonic blade **150** and the ultrasonic transmission waveguide **104** may be formed as a single unitary body.

The ultrasonic blade **150** comprises the substantially straight planar treatment region **158** to effect tissue. The treatment region **158** comprises the generally flat planar top surface **154** and the smooth substantially arcuate bottom surface **156**. The bottom surface **156** comprises a smooth atraumatic surface **162** that is substantially arcuate about axis **131** at a distal end **134** of the treatment region **158** for bone contact and atraumatic use along the bone region. The distal end **134** of the treatment region **158** also comprises a substantially flat tip with a distal cutting edge **166**. The atraumatic surface **162** is configured to prevent the distal cutting edge **166** from cutting into bone tissue. The atraumatic surface **162** extends from the bottom surface **156** to the top surface **154** and is intended to contact and slidingly engage the bone as the cutting edge **166** removes muscle tissue from the bone without cutting into bone tissue. A cutting edge **168** is positioned laterally along one side of the treatment region **158**. The blade **150** and the distal cutting edge **166** define a broad top surface **154** for effecting tissue. The broad top surface **154** of the blade **150** has a width "W" that is substantially greater than a thickness "T". In one embodiment, the cutting edge **168** extends from the proximal end **132** to the distal end **134** of the treatment region **158**. The blade **150** also comprises a dull, smooth, or curved lateral coagulating edge **164** positioned laterally along the side of the treatment region **158** opposite the lateral cutting edge **168**. In one embodiment, the coagulating edge **164** extends from the proximal end **132** to the distal end **134** of the treatment region **158**. The coagulating edge **164** may be used for different tissue effects other than coagulation, for example. In one example, the flat tip distal cutting edge **166** or the lateral cutting edge **168** of the ultrasonic blade **150** is suitable to remove muscle tissue from bone while the atraumatic surface **162** glides against the bone. The clinician may select either one of the cutting edges **166**, **168** or the atraumatic surface **162** for different tissue effects. The ultrasonic blade **150** may be fabricated from a material suitable for transmission of ultrasonic energy as previously described with respect to the ultrasonic blade **120**.

FIGS. **12-15** illustrate one embodiment of an ultrasonic blade **180**. The ultrasonic blade **180** is generally well-suited for cutting, coagulating, and reshaping tissue. In one embodiment the ultrasonic blade **180** may be configured as an ultrasonic surgical elevator blade generally well-suited to separate muscle tissue from bone. Nevertheless, the ultrasonic blade **180** may be employed in various other therapeutic procedures. FIG. **12** is a side view of the ultrasonic blade **180**. FIG. **13** is a top view of the ultrasonic blade **180**. FIG. **14** is a cross-sectional view of the ultrasonic blade **180** taken along line **14-14** in FIG. **12**. FIG. **15** is a top perspective view of the ultrasonic blade **180**.

In the embodiment illustrated in FIGS. **12-15**, the ultrasonic blade **180** comprises a blade body **182** having a generally flat planar top surface **184** and a generally flat planar bottom surface **186**. The top and bottom surfaces **184**, **186** are substantially parallel and extend along the longitudinal central axis **127**. The blade body **182** may comprise a substantially elongated treatment region, generally designated as **188**, and a neck or transition portion **190** that protrudes from a proximal end **132** of the treatment region **188**. The neck portion **190** may be attached to the ultrasonic transmission waveguide **104** by a stud, weld, glue, quick connect, or other known attachment methods, for example. In alternative embodiments, the ultrasonic blade **180** and the ultrasonic transmission waveguide **104** may be formed as a single unitary body. In either configuration, the ultrasonic transmission waveguide **104** amplifies the mechanical vibrations transmitted to the ultrasonic blade **180** as is well known in the art. Accordingly, the ultrasonic blade **180** is adapted to couple to the ultrasonic surgical instrument **100**, which may be employed with the above-described ultrasonic surgical instruments **100**, which may be employed in the above-described ultrasonic system **10**. In one embodiment, the ultrasonic blade **180** and the ultrasonic transmission waveguide **104** may be formed as a single unitary body.

The ultrasonic blade **180** comprises the substantially flat planar treatment region **188** to effect tissue. The treatment region **188** comprises the generally flat planar top surface **184** and the generally flat planar bottom surface **186**. A notch **192** (hook shaped in the illustrated embodiment) is defined at the distal end **134** of the treatment region **188**. The notch **192** extends inwardly into the blade body **182**. The notch **192** comprises a cutting edge **194**. A first straight lateral cutting edge **196** is positioned on the distal end **134** of the treatment region **188**. A second straight lateral cutting edge **198** is positioned laterally along the along the side of the treatment region **188** between the notch **192** and the proximal end **132**. A dull, smooth, or curved coagulating edge **200** is positioned laterally along the side of the treatment region **188** opposite the lateral cutting edge **198**. The dull, smooth, or curved coagulating edge **200** is substantially arcuate about axis **135**. The blade **180** and the lateral cutting edge **198** define a broad top surface **184**. The broad top surface **184** of the blade **184** has a width "W" that is substantially greater than a thickness "T". In one embodiment, the curved edge **200** extends from the proximal end **132** to the distal end **134** of the treatment region **188**. The coagulating edge **200** may be used different tissue effects other than coagulation, for example. In one example, the cutting edges **194**, **196**, **198** of the ultrasonic blade **180** may be employed to remove muscle tissue from bone while the coagulating edge **200** may be used for coagulation. The notch cutting edge **194** assists in cutting tissue. For example, the notch cutting edge **194** allows for faster tissue cutting in avascular tissue or may

aid in entering joint capsules. The ultrasonic blade **180** may be fabricated from a material suitable for transmission of ultrasonic energy as previously described with respect to the ultrasonic blade **120**.

FIGS. **16-19** illustrate one embodiment of an ultrasonic blade **210**. The ultrasonic blade **210** is generally well-suited for cutting, coagulating, and reshaping tissue. In one embodiment the ultrasonic blade **210** may be configured as an ultrasonic surgical elevator blade generally well-suited to separate muscle tissue from bone. Nevertheless, the ultrasonic blade **210** may be employed in various other therapeutic procedures. FIG. **16** is a side view of the ultrasonic blade **210**. FIG. **17** is a top view of the ultrasonic blade **210**. FIG. **18** is an end-sectional view of the ultrasonic blade **210** taken along line **18-18** in FIG. **16**. FIG. **19** is a top perspective view of the ultrasonic blade **210**.

In the embodiment illustrated in FIGS. **16-19**, the ultrasonic blade **210** comprises a blade body **212** having a generally flat planar top surface **214** and a generally flat planar bottom surface **216**. The top and bottom surfaces **212**, **214** are substantially parallel and extend along the longitudinal central axis **127**. The blade body **212** may comprise a substantially elongated treatment region, generally designated as **218**, and a neck or transition portion **220** that protrudes from a proximal end **132** of the treatment region **218**. The neck portion **220** may be attached to the ultrasonic transmission waveguide **104** by a stud, weld, glue, quick connect, or other known attachment methods, for example. In alternative embodiments, the ultrasonic blade **210** and the waveguide **104** may be formed as a single unitary body. In either configuration, the ultrasonic transmission waveguide **104** amplifies the mechanical vibrations transmitted to the ultrasonic blade **210** as is well known in the art. Accordingly, the ultrasonic blade **210** is adapted to couple to the ultrasonic transmission waveguide **104** of the surgical instrument **100**, which may be employed with the above-described ultrasonic system **10**. In one embodiment, the ultrasonic blade **210** and the ultrasonic transmission waveguide **104** may be formed as a single unitary body.

The ultrasonic blade **210** comprises the substantially flat planar treatment region **218** to effect tissue. The treatment region **218** comprises the generally flat planar top surface **214** and the generally flat planar bottom surface **216**. A first atraumatic flat edge **222** may be positioned on the tip at the distal end **134** of the ultrasonic blade **210** for bone contact and atraumatic use along the bone region as well as to characterize the blade **210**. The blade **210** and the distal atraumatic edge **222** define a broad top surface **214** for effecting tissue. The top surface **214** of the blade **210** has a width "W" that is substantially greater than a thickness "T" of the blade **210**. The flat atraumatic edge **222** at the tip of the distal end **134** of the ultrasonic blade **210** may be normal to the longitudinal central axis **127** of the ultrasonic blade **210** and may be employed for benchmarking measurements of the displacement of the distal end **134**, for example. This may be employed to make measurements and to characterize the ultrasonic blade **210**. A smooth atraumatic surface **228** that is substantially arcuate about axis **135** may be provided at the distal end **134** for bone contact and atraumatic use along the bone region. Cutting edges **224**, **226** may be disposed laterally along both sides of the treatment region **218**. The ultrasonic blade **210** may be fabricated from a material suitable for transmission of ultrasonic energy as previously described with respect to the ultrasonic blade **120**.

FIG. **20** is a top perspective view of one embodiment of an ultrasonic blade **230**. The ultrasonic blade **230** is generally well-suited for cutting, coagulating, and reshaping tissue. In one embodiment the ultrasonic blade **230** may be configured as an ultrasonic surgical elevator blade generally well-suited to separate muscle tissue from bone. Nevertheless, the ultrasonic blade **230** may be employed in various other therapeutic procedures. The ultrasonic blade **230** has a blade body **232** that has a generally flat planar tapered top surface portion **234**, a generally flat planar bottom surface **238** (FIG. **21**), and an offset edge portion **236** with a cutting edge **239** well-suited for dissecting tissue against bone. The ultrasonic blade **230** may be fabricated from a material suitable for transmission of ultrasonic energy as previously described with respect to the ultrasonic blade **120**. The blade body **232** may comprise a substantially elongated treatment region, generally designated as **240**, and a neck or transition portion **242** that protrudes from a proximal end **132** of the treatment region **240**. The neck portion **242** may be attached to the ultrasonic transmission waveguide **104** by a stud, weld, glue, quick connect, or other known attachment methods, for example. In alternative embodiments, the ultrasonic blade **230** and the waveguide **104** may be formed as a single unitary body. In either configuration, the ultrasonic transmission waveguide **104** amplifies the mechanical vibrations transmitted to the ultrasonic blade **230** as is well known in the art. Accordingly, the ultrasonic blade **230** is adapted to couple to the ultrasonic surgical instrument **100**, which may be employed with the above-described ultrasonic system **10**.

FIG. **21** illustrates a use of one embodiment of the ultrasonic blade **230** shown in FIG. **20**. The ultrasonic blade **230** comprises the generally planar treatment region **240** with a generally flat planar top surface **234**, a generally flat planar bottom surface **238**, and an offset edge portion **236** with a cutting edge **239**. The cutting edge **239** is suitable to dissect muscle tissue **244** from a bone **246**.

The ultrasonic blades **120**, **150**, **180**, **210**, **230** described above each have a length "L" that is substantially equal to an integral multiple of one-half system wavelengths ($\lambda/2$). The distal end **134** of the ultrasonic blades **120**, **150**, **180**, **210**, **230** may be disposed near an antinode in order to provide the maximum longitudinal excursion of the distal end **134**. When the transducer assembly is energized, the distal end **134** of the ultrasonic blade **120**, **150**, **180**, **210**, **230** may be configured to move in the range of, for example, approximately 10 to 500 microns peak-to-peak, and preferably in the range of about 30 to 150 microns at a predetermined vibrational frequency range. As previously discussed, a suitable vibrational frequency range may be about 20 Hz to 120 kHz and a well-suited vibrational frequency range may be about 30-70 kHz and one example operational vibrational frequency may be approximately 55.5 kHz.

Other embodiments may comprise multiple end effectors **50** attached distally to a common ultrasonic transmission waveguide **104**. The end effectors **50** may provide a variety of tissue effects that are similar to those discussed above with respect to the ultrasonic blades **120**, **150**, **180**, **210**, **230**. As discussed above, the ultrasonic blades **120**, **150**, **180**, **210**, **230** may be separable (and of differing composition) from the waveguide **104**, and coupled by, for example, a stud, weld, glue, quick connect, or other known methods. A quick connect coupling may provide lower cost and ease of use of multiple ultrasonic blades **120**, **150**, **180**, **210**, **230** in one procedure.

As described above, an end effector or blade of an ultrasonic surgical instrument can be vibrated along a longitudinal axis to treat tissue, for example. In various circumstances, such instruments can be preferably configured such that they do not vibrate in any other direction, such as

axes which are transverse to the longitudinal axis, for example. Such transverse vibration may make the surgical instrument inefficient and may require additional power to operate the surgical instrument, for example. In at least one circumstance, such transverse vibration may be created and/or amplified by an imbalanced asymmetrical configuration of the blade. In various embodiments of the present invention, an end effector or blade of an ultrasonic surgical instrument can be configured such that such transverse vibration is reduced or eliminated. For example, in at least one embodiment, the blade can include an asymmetrical configuration which can be balanced with respect to at least one axis which is transverse to the longitudinal vibrational axis of the surgical instrument, as described in greater detail below.

In various embodiments, referring to FIGS. **56-59**, an ultrasonic surgical instrument blade, such as blade **680**, for example, can include blade body **682** having a generally flat top surface, or side, **684** and a generally flat bottom surface, or side, **686**. Although surfaces, or sides, **684** and **686** can be generally flat or planar, they can comprise any suitable configuration including curved and/or curvilinear configurations, for example. The top and bottom surfaces **684**, **686** can be substantially parallel and can extend along the longitudinal or central axis **127**. The blade body **682** may comprise a substantially elongated treatment region, generally designated as **688**, and a neck or transition portion **690** that protrudes from a proximal end **632** of the treatment region **688**. The neck portion **690** may be attached to the ultrasonic transmission waveguide **104** (FIG. **1**) by a stud, weld, glue, quick connect, or other known attachment methods, for example. In alternative embodiments, the ultrasonic blade **680** and the ultrasonic transmission waveguide **104** may be formed as a single unitary body. In either configuration, the ultrasonic transmission waveguide **104** can amplify the mechanical vibrations transmitted to the ultrasonic blade **680** as is well known in the art.

In various embodiments, blade **680** can include a notch **692** (hook shaped in the illustrated embodiment) which is defined at the distal end **634** of the treatment region **688**. The notch **692** can extend inwardly into the blade body **682**, as illustrated in FIGS. **57** and **59**, wherein the notch **692** can comprise a cutting edge **694** configured to incise tissue, for example. In various embodiments, referring to FIG. **58**, the blade **680** can further include cutting edge **696** which can also be configured to incise tissue, for example. In at least one embodiment, the cross-section of blade **680**, again referring to FIG. **58**, can be configured such that blade **680** is balanced, or at least substantially balanced, with respect to axis **669**. In various embodiments, the cross-section can be defined by a plane, such as plane **673**, for example, wherein plane **673** can be perpendicular to longitudinal axis **127** and wherein axis **669** can lie within the plane **673**. In at least one embodiment, the cross-section of blade **680** can include a body, or central, portion **675** and a cutting, or step, portion **679**, extending from central portion **675**. In various embodiments, axis **669** may be referred to as a centerline of the blade, or a portion of the blade, although such use is not intended to communicate that the blade, or a portion of the blade, is necessarily symmetrical. Often, such a reference can be used to refer to an axis, or datum, which is utilized to determine or measure whether a symmetrical and/or asymmetrical blade, or a portion of a blade, is balanced with respect thereto.

In various embodiments, referring to the cross-section of blade **680** illustrated in FIG. **60**, the sides of central portion **675** can be defined by surfaces **684** and **686**, for example, wherein surfaces **684** and **686** can define a width (w) therebetween. Although the width of central portion **675** is substantially constant in the illustrated exemplary embodiment, the width of central portion **675** can have any suitable configuration, including configurations which comprise identical, or at least substantially identical, portions on the opposite sides of transverse axis **669**, for example. In at least one such embodiment, central portion **675** can include a first mass M_{B1} positioned on a first side of transverse axis **669** and a second mass M_{B2} positioned on a second side of said transverse axis, wherein M_B, can be equal, or at least substantially equal, to M_{B2}. In various embodiments, again referring to FIG. **60**, M_{B1} can comprise the area defined by h and w/2 and, similarly, M_{B2} can comprise the area defined by l_2 and w/2. In at least one embodiment, l_1 can equal, or at least substantially equal, l_2. In various alternative embodiments, however, M_{B1} may not be equal to M_{B2}. In at least one such embodiment, l_1 may not equal l_2. In various embodiments, though, the mass of blade **680** may be balanced in another manner as described in greater detail below.

In various embodiments, referring to FIG. **60**, step portion **679** of the cross-section can comprise first surface **681** and second surface **683**, wherein cutting edge **696** can be positioned intermediate first surface **681** and second surface **683**. In at least one embodiment, step portion **679** can include, similar to the above, a first mass M_{S1}, defined by A_1, positioned on the first side of axis **669** and a second mass M_{S2}, defined by A_2, positioned on the opposite, or second, side of axis **669**, wherein M_{S1} can be equal, or at least substantially equal, to M_{S2}. In at least one such embodiment, step portion **679** can include a center of gravity **685**, wherein center of gravity **685** can be positioned along transverse axis **669**. Although various embodiments having a symmetrical step portion **679** are possible, step portion **679** can include an asymmetric configuration with respect to transverse axis **669**. In at least one such embodiment, cutting edge **696** may not lie along, or be co-planar with, axis **669** wherein, as a result, blade **680** can include a cutting edge which is positioned closer to one of sides **684** and **686** without creating a mass imbalance with respect to axis **669**. In at least one embodiment, referring to FIG. **60**, cutting edge **696** can be positioned a distance x with respect to second side **686**, for example, such that blade **680** is balanced as described in greater detail below. Owing to the closer proximity of the cutting edge with respect to one side of the blade, the cutting edge may be more visible to the surgeon thereby facilitating the proper use of the surgical instrument.

In various embodiments, further to the above, M_{S1} may not be equal to M_{S2}. In at least one such embodiment, though, the masses of central portion **675** and step portion **679**, for example, can be arranged such that the mass of blade **680** is still balanced with respect to transverse axis **669**, for example. More particularly, M_{S1}, M_{S2}, M_{B1}, and M_{B2} can be selected such that $M_{B1}+M_{S1}$ is equal, or at least substantially equal, to $M_{B2}+M_{S2}$. In such embodiments, as a result, the total mass of blade **680** on the first side of axis **669** can be equal, or at least substantially equal, to the total mass of blade **680** on the second side of axis **669**. Furthermore, in various embodiments, the mass of blade **680** can be arranged such that the moment of force and the moment of inertia of masses M_{S1}, M_{S2}, M_{B1}, and M_{B2} are balanced as well. Generally, the moment of force of a mass is proportional to the product of the mass and the distance between the center of gravity of the mass and a datum, or axis. Also, generally, the moment of inertia of a mass is proportional to the product of the mass and the square of the distance between the center of gravity of the mass and a datum, or axis.

Referring to the illustrated embodiment of FIG. **60**, masses M_{S1}, M_{S2}, M_{B1}, and M_{B2} can be positioned so as to balance, or at least substantially balance, the moment of force and the moment of inertia of blade **680** with respect to transverse axis **669**, for example.

In various embodiments, again referring to FIG. **60**, step portion **679**, as described above, can include first and second surfaces and a cutting edge **696** positioned therebetween. In at least one embodiment, step portion **679** can further include an edge height, s, which can define the distance between cutting edge **696** and first portion **697** of step portion **679**. More particularly, in at least one embodiment, step portion **679** can include first portion **697** and cutting portion **699** which are separated by datum **695**, wherein edge height s can define the distance between the top of first portion **697**, i.e., cutting edge **696**, and datum **695**. Stated another way, referring to FIG. **60**A, edge height s can be defined as the distance between the top of a right triangle defined by area A_4 and the top of a right triangle defined by the combined areas of A_1 and A_3. In at least one embodiment, further to the above, A_1 can equal A_2, and A_2 can equal A_3+A_4. In various embodiments where second surface **683** is parallel to axis **669**, the edge height s can equal the length of second surface **683**. In various other embodiments where second surface **683** is not parallel to axis **669**, the edge height s can equal the length of the projection of second surface **683** onto axis **669**. In various embodiments, cutting edge **696** can lie in a first plane **693**, datum **695** can lie in a second plane which is parallel to the first plane, and wherein the step height s can define the distance between the first and second planes.

In various embodiments, first surface **681** and second surface **683** can be arranged such that an angle α, or edge angle, is defined therebetween wherein the edge angle can be any suitable angle such as approximately 35 degrees or approximately 65 degrees, for example. During various experimental uses of such surgical blades, it was observed that surgical blades having smaller edge angles, i.e., angles closer to zero degrees, transected tissue faster than surgical blades having larger edge angles, i.e., angles closer to 90 degrees. It was also observed, though, that such blades were to able to seal, or produce hemostasis within, the edges of the tissue as the tissue was being transected regardless of the edge angle selected. Such a result was deemed to be surprising and, advantageously, it is believed that the edge angle of the blades disclosed herein can be selected to facilitate a desired cutting rate without affecting the hemostasis of the tissue. Furthermore, it was also determined by the experimental uses of such surgical blades that a relationship for producing hemostasis within porcine tissue can comprise:

$$1.26 - 0.0102^{*}a - 1.14^{*}h + 8.14w$$

wherein a represents the longitudinal amplitude of the blade, wherein w represents the width of the blade, similar to the above, and wherein h represents the height of the blade. In various embodiments, this relationship for producing hemostasis can be equated to zero, values for two of variables a, h, and w can be selected or input into the relationship, and the relationship can then be utilized to determine a value for the third variable. In at least one circumstance, this relationship was used to determine a suitable range of widths for the blade, w, which can be between approximately 0.040" and approximately 0.070", depending on the level of hemostasis required from a particular blade. A width of approximately 0.060" was selected for one actual example.

In at least one embodiment, second surface **683** of step portion **679** can be parallel, or at least substantially parallel, to first side **684** and/or second side **686** of central portion **675**. In various embodiments, first surface **681** can lie within a plane which is transverse to second surface **683** and first side **684**, for example. Although portions of the exemplary embodiment of step portion **679** in FIG. **60** are illustrated as right triangles having straight sides, step portion **679** can include any suitable configuration which is balanced, or at least substantially balanced, with respect to transverse axis **669**, for example. In at least one embodiment, such balancing can be achieved by positioning the center of gravity of the step portion along the centerline of the blade. In various embodiments, a blade, such as blade **680**, for example, can be balanced such that the relationship of:

$$\frac{x^2}{2*\tan\alpha} + \frac{(w-x)}{2}\left(\frac{x}{\tan\alpha} - s\right) - \left(\frac{w}{2}\right)^2 \frac{1}{\tan\alpha} \quad \text{or, correspondingly:} \tag{1}$$

$$\left[\frac{x^2}{2} * (\tan\alpha)^{-1} + \frac{(w-x)}{2}\left(x * (\tan\alpha)^{-1} - s\right) - \left(\frac{w}{2}\right)^2 (\tan\alpha)^{-1}\right]$$

$$\frac{x^2}{2} * (\tan\alpha)^{-1} + \frac{(w-x)}{2}\left(x * (\tan\alpha)^{-1} - s\right) - \left(\frac{w}{2}\right)^2 (\tan\alpha)^{-1}$$

is equal to, or at least substantially equal to, zero, wherein w is the width of the body portion of the blade, such as central portion **675**, for example, wherein α is the edge angle defined between the first and second surfaces of the step portion, such as surfaces **681** and **683**, for example, wherein s is the edge height of the step portion which can be defined as outlined above, and wherein x is the distance between a side of the body portion, such as second side **686**, and the cutting edge of the step portion, such as cutting edge **696**, for example.

In various embodiments, suitable values for variables w, s, and a can be selected and relationship (1) can be manipulated to determine a value for variable x. In at least one such embodiment, relationship (1) is equated to zero and the selected values for variables w, s, and a are substituted into relationship (1) to determine the value for variable x. In such circumstances, variable x is dependent upon the selection of the values for w, s, and α. If a blade, such as blade **680**, for example, is constructed in accordance with the selected values of w, s, and α and the determined value for x, then blade **680** will be balanced, or at least substantially balanced, with respect to transverse axis **669**, for example. As outlined above, the values for variables w, s, and α can be selected for various reasons. For example, the value for variable w, i.e., the width of the body portion of the blade, can be selected such that the blade can fit through an endoscope, for example. In various embodiments, the value for variables s and a, i.e., the height and edge angle of step portion **679**, can be selected to improve or optimize the manufacturability of the blade. In addition to or in lieu of the above, the values for variable w, s, and/or α can be selected to optimize the cutting performance of the blade, for example.

Although relationship (1) may be utilized to set variable x as a dependent variable, relationship (1) may be utilized to set at least one of the other above-described variables as a dependent variable. In at least one such embodiment, for example, relationship (1) can be equated to zero and selected values for variables w, s, and x can be substituted into

relationship (1) to determine a value for variable α. Similarly, relationship (1) can be equated to zero and selected values for variables w, a, and x can be substituted into relationship (1) to determine a value for variable s, for example. A similar approach can be undertaken to determine a value for variable w. Further to the above, in various embodiments, an ultrasonic surgical blade can be configured such that, for any given values of s and w, the relationship of:

$$A*x^2*(\tan\alpha)^{-1}+B*x*(\tan\alpha)^{-1}+C*(\tan\alpha)^{-1}+D*x+E \quad (2)$$

$$A*x^2*(\tan\alpha)^{-1}+B*x*(\tan\alpha)^{-1}+C*(\tan\alpha)^{-1}+D*x+E$$

is equal, or at least substantially equal, to zero, wherein A, B, C, D, and E are constants. In various alternative embodiments, an ultrasonic surgical blade can be configured such that, for any given values of s and α, the relationship of:

$$A*x^2+B*x+C*x*w+D*w+E*w^2+F \quad (3)$$

is equal, or at least substantially equal, to zero, wherein A, B, C, D, E, and F are constants. In various further embodiments, an ultrasonic surgical blade can be configured such that, for any given values of w and α, the relationship of:

$$A*x^2+B*x+C*x*s+D*s+E \quad (4)$$

is equal, or at least substantially equal, to zero, wherein A, B, C, D, and E are constants.

In various embodiments, the above-described approaches for balancing an ultrasonic surgical blade can be utilized to balance, or at least substantially balance, various alternative surgical blades as outlined in greater detail below. In at least one embodiment, owing to the relationship between mass and kinetic energy, the energy imparted by such blades can also be balanced. More specifically, if the mass of a blade is balanced with respect to a datum or centerline of a blade, the kinetic energy produced by the blade, when it is motivated, will also be balanced with respect to the datum or centerline. In such circumstances, as a result, the surgical blade can be configured to deliver a uniform energy profile to the targeted tissue, for example. In various embodiments, a balanced, or at least substantially balanced, blade can provide a uniform, or at least substantially uniform, pressure profile to the targeted tissue. In at least one embodiment, a blade can be considered to be substantially balanced if the mass on the first side of the cross-section centerline is within approximately 10 percent of the mass on the second side of the centerline. In such embodiments, although the blade is not mass balanced, any transverse vibrations produced by the unbalanced blade may not substantially affect the performance of the blade. In at least one embodiment, a blade can be considered substantially balanced if the cutting edge, such as cutting edge **696**, for example, is positioned within approximately 10 percent of the calculated distance for x, for example. Further to the above, although methods of balancing the mass of a blade with respect to one axis have been described herein, such methods can be utilized to balance the mass of a blade with respect to two or more axes.

In at least one embodiment, referring to FIG. **61**, blade **780** can include a central portion **775** having first side **784** and second side **786**. Blade **780** can further include two step portions **779** which, in various embodiments, can be positioned on opposite sides of central portion **775**. In such embodiments, as a result, blade **780** can comprise two cutting edges **796** which can be configured to transect tissue, for example. In various embodiments, further to the above, each step portion **779** can be balanced with respect to axis **769**, wherein axis **769** can be transverse to longitudinal axis **127**. In various alternative embodiments, although not illustrated, step portions **779** can be arranged such that, although each step portion **779** may be imbalanced with respect to axis **769**, step portions **779** can balance, or offset, one another. In at least one additional embodiment, referring to FIG. **62**, blade **880** can include central portion **875** and two step portions **879** wherein, similar to the above, portions **875** and **879** can be balanced with respect to transverse axis **869**. In at least one further embodiment, referring to FIG. **63**, blade **980** can include a central portion **975** having first side **984** and second side **986**. Blade **980** can further include two step portions **979** wherein, similar to the above, portions **975** and **979** can be balanced with respect to transverse axis **969**. In at least one more embodiment, referring to FIG. **64**, blade **1080** can include central portion **1075** and two step portions **1079** wherein portions **1075** and **1079** can be balanced with respect to transverse axis **1069**.

FIGS. **22-24** illustrate one embodiment of an ultrasonic blade **250** comprising a protective sheath **252**. The ultrasonic blade **250** is generally well-suited for cutting, coagulating, and reshaping tissue. The protective sheath **252** is generally well suited for glidingly engaging the surface of the bone to prevent damage to the bone and the ultrasonic blade **250** while the ultrasonic blade **250** removes muscle tissue from the bone and to dissipate thermal energy generated by the ultrasonic blade **250**. FIG. **22** illustrates a partial cross-sectional view of one embodiment of an ultrasonic blade **250** comprising a protective sheath **252** taken along the longitudinal axis. FIG. **23** is a bottom view of the ultrasonic blade **250** taken along line **23-23**. FIG. **24** is a cross-sectional view of the ultrasonic blade **250** and the protective sheath **252**. The ultrasonic blade **250** comprises a body **254** having a substantially planar top surface **256** a generally rounded cutting edge **258** and an atraumatic surface **259** for bone contact and atraumatic use along the bone region configured to prevent the cutting edge **136** from cutting into bone tissue. In one embodiment the cutting edge **258** may be configured as an ultrasonic surgical elevator blade generally well-suited to separate muscle tissue from bone. A lateral cutting edge **264** suitable for dissecting tissue is positioned on one side of the body **254** and an atraumatic edge **266** suitable to coagulate tissue may be positioned laterally along an opposite side of the body **254**. The body also comprises a generally flat planar bottom surface **268** adjacent to the protective sheath **252**. An air gap **262** may separate the bottom surface **268** from the protective sheath **252** for cooling purposes, for example. The protective sheath **252** comprises a substantially arcuate lateral bottom surface **260** with a flat portion in the center thereof.

FIG. **25** illustrates a use of one embodiment of an ultrasonic surgical instrument **270** removing muscle tissue **244** from bone **246**. The ultrasonic surgical instrument **270** comprises the ultrasonic blade **250** described above. The ultrasonic blade **250** comprises the atraumatic bone protective sheath **252**. As used herein, atraumatic means designed to avoid injury. In one embodiment, the atraumatic bone protective sheath **252** extends longitudinally below the ultra-

sonic blade **250** to the handpiece housing of the ultrasonic surgical instrument **270** to act between the bottom surface of the ultrasonic blade **268** and the bone **246** to avoid injuring the bone **246** while coagulating, reshaping, or removing muscle tissue **244** from the bone **246** as described above. The air gap **262** provides a path for irrigation fluid to pass between the bottom surface **268** of the ultrasonic blade **250** and the protective sheath **252** to dissipate thermal energy generated by the ultrasonic blade **250** while cutting. In one embodiment, the protective sheath **252** may be rigidly and fixedly attached or mounted to the bottom surface **268** of the ultrasonic blade **250** in any suitable manner to reduce design complexity and cost. In other embodiments, the protective sheath **252** may be fixedly mounted to other substantially rigid portions of the ultrasonic surgical instrument **270**. In alternative embodiments, the protective sheath **252** may be user deployable (e.g., retractable).

The protective sheath **252** reduces thermal heating effects that may result from the ultrasonic blade **250** contacting the bone **246**. The process of removing the muscle tissue **244** from the bone **246** during posterior spine access may be a lengthy procedure. Accordingly, there is a concern that the high temperatures may build and cause breakage of the ultrasonic blade **250**, spread of excessive lateral thermal heating, damage to the bone **246**, damage to the muscle **244**, and/or damage to nerve tissue. Accordingly, the bottom surface **268** of the ultrasonic blade **250** is shielded or protected by the protective sheath **252** and can rest against the surface of the bone **246** while the active portion or the cutting edge **258** of the ultrasonic blade **250** applies energy to the muscle tissue **244**, resulting in good surgical technique of dissecting muscle tissue from bone (e.g., the spine). This protective sheath **252** also shields the ultrasonic blade **250** from contacting metal retractors and thus minimizes the risk of breaking the blade **250**. Reducing the risk of breaking the ultrasonic blade **250** reduces instrument exchange during a surgical procedure because there is less concern for retracting instruments to avoid breaking the ultrasonic blade **250**. In addition, the protective sheath **252** may enable more directed energy between the blade and a clamp arm (not shown).

The protective sheath **252** may be formed of any suitable polymeric material and may be formed on or attached to the ultrasonic blade **250** using a variety of techniques. Generally, the protective sheath **252** may be formed of any material suitable to shield the ultrasonic blade **250** from contacting bone or metal objects while cutting and minimizing the risk that of breaking the ultrasonic blade **250**. In addition, the protective sheath **252** may be formed of a material and may be attached to the ultrasonic blade **250** in a manner that is suitable to decrease the thermal energy created by the ultrasonic blade **250** to spread from the bottom surface **268** thereof. In one embodiment, the protective sheath **252** may be formed by coating the bottom surface **268** of the ultrasonic blade **250** with a polymeric material. The protective sheath **252** may be formed of a variety of high temperature lubricious polymers. For example, the protective sheath **252** may be formed of any number of fluorinated polymers such as Tetrafluoroethylene or Polytetrafluoroethylene, such as Teflon® by DuPont. In another embodiment, the protective sheath **252** may be formed as separate rigid polymeric component permanently attached (e.g., affixed, mounted) to the bottom surface **268** of the ultrasonic blade **250**. The protective sheath **252** may be attached to the bottom surface **268** of the ultrasonic blade **250** with physical snaps, adhesives, and/or insert/molding. In yet another embodiment, the protective sheath **252** may be formed as a separate rigid polymeric component mounted to a rigid portion of the ultrasonic instrument **270** and shield the bottom surface **268** of the ultrasonic blade **250** without physically contacting the bottom surface **268** of the ultrasonic blade **250**. This provides the air gap **262** between the bottom surface **268** of the ultrasonic blade **250** and the separate rigid polymeric protective sheath **252**. The air gap **262** enables irrigation fluid to travel between the protective sheath **252** and the bottom surface **268** of the ultrasonic blade **250** to assist in cooling the blade. In one embodiment, irrigation may be provided within the protective sheath to assist in cooling the ultrasonic blade **250** from ultrasonically induced thermal effects. For example, in one embodiment a protective sheath may be configured to act as an irrigation conduit along the bottom surface of the ultrasonic blade to provide directed irrigation for surgical regions as well as providing a cooling effect to the ultrasonic blade during use (FIGS. **52-55**). In various other embodiments, the protective sheath **252** may be user deployable and/or retractable by the user. Thus the user may deploy the protective sheath **252** to shield the bottom surface **268** of the ultrasonic blade **150** from the bone **246** or may retract the protective sheath **252** when desired to enable back-cutting. In other embodiments, the protective sheath **252** may be configured to assist in the mechanical dissection or removal of the muscle tissue **244** from the bone **246**. For example, the protective sheath **252** may be configured in the shape and style to accommodate a conventional curette or cobb blade with sharp cutting edges **258**, **264**. The sheath also may be employed as a fulcrum along the bottom surface **268** of the ultrasonic blade **250** while still enabling distal and lateral tissue effects by exposing the cutting edge **258** of the ultrasonic blade **250**.

FIG. **26** illustrates a use of one embodiment of the ultrasonic surgical blade **230** shown in FIGS. **20**, **21** comprising one embodiment of a protective sheath **272**. The protective sheath **272** is positioned adjacent to the bottom surface **238** of the ultrasonic surgical blade **230**. The protective sheath **272** protects the bone **246** as the cutting edge **239** dissects the muscle tissue **244** from the bone **246**. An air gap **274** between the protective sheath **272** and the bottom surface **238** of the ultrasonic blade **230** provides a path for irrigation fluid to pass therebetween to dissipate thermal energy generated by the ultrasonic blade **230** while cutting. The protective sheath **272** may be formed of any polymeric material as previously discussed with respect to FIGS. **22-25**.

FIGS. **27-31** illustrate one embodiment of an ultrasonic surgical instrument **280** comprising an end effector **304**. FIG. **27** is a top perspective view of one embodiment of the ultrasonic surgical instrument **280**. FIG. **28** is a cross-sectional view of the ultrasonic surgical instrument **280** shown in FIG. **27** taken along the longitudinal axis of the ultrasonic surgical instrument **280**. FIG. **29** is a bottom view of the ultrasonic surgical instrument **280** taken along lines **29-29**. FIG. **30** is a cross-sectional view of the ultrasonic surgical instrument **280** taken along lines **30-30**. FIG. **31** is cross-sectional view of the ultrasonic surgical instrument **280** taken along lines **31-31**. With reference now to FIGS. **27-31**, the ultrasonic surgical instrument **280** comprises an outer tubular member or outer tube **282** that extends from the handpiece assembly **456** (FIGS. **41-44**). The outer tube **282** has a substantially circular cross-section and a longitudinal opening or aperture **302** to receive an inner tubular member or inner tube **312**. The outer tube **282** has a substantially circular cross-section and may be fabricated from stainless steel. It will be recognized that the outer tube **282** may be constructed from any suitable material and may have any

suitable cross-sectional shape. Located at the distal end of the ultrasonic surgical instrument **280** is an end effector **304** for performing various tasks, such as, for example, grasping tissue, cutting tissue and the like. It is contemplated that the end effector **304** may be formed in any suitable configuration.

The end effector **304** comprises a non-vibrating clamp arm assembly **284**, an ultrasonic blade **286**, and a protective sheath **288**. The clamp arm assembly **284** comprises a tissue pad **300**. The non-vibrating clamp arm assembly **284** is to grip tissue or compress tissue against the ultrasonic blade **286**, for example.

The ultrasonic blade **286** is generally well-suited for cutting, coagulating, and reshaping tissue. In one embodiment the ultrasonic blade **286** may be configured as an ultrasonic surgical elevator blade generally well-suited to separate muscle tissue from bone. Nevertheless, the ultrasonic blade **286** may be employed in various other therapeutic procedures. The ultrasonic blade **286** comprises a cutting edge **324** at a distal portion and in other embodiments may comprise one or more lateral cutting edges and/or lateral atraumatic dull, smooth or curved edges. The ultrasonic blade **286** comprises a bottom surface **322** adjacent to the protective sheath **288** such that the protective sheath **288** shields the bottom surface **322** from contacting other surfaces. The ultrasonic blade **286** may be coupled to the ultrasonic transmission waveguide **104** or may be formed as a unitary piece therewith. The ultrasonic instrument **280** may be employed with the ultrasonic system **10**.

The protective sheath **288** is generally well suited for glidingly engaging the surface of the bone to prevent damage to the bone while the ultrasonic blade **286** removes muscle tissue from bone and to dissipate thermal energy generated by the ultrasonic blade **286** while cutting. In the embodiment, the protective sheath **288** may be fixedly coupled to the ultrasonic blade **286** or to the outer tube **282** and is not user deployable. An air gap **320** between the bottom surface **322** of the ultrasonic blade **286** and the protective sheath **288** provides a path for irrigation fluid to pass therebetween to dissipate thermal energy generated by the ultrasonic blade **286**. The protective sheath **288** comprises the proximal partially circumferentially extending portion **310** that overlaps and fixedly engages the outer tube **282**. As previously discussed, the proximal partially circumferentially extending portion **310** comprises multiple projections **318** to engage apertures **316** formed in the outer tube **282**. In one embodiment, the protective sheath **288** may be fixedly attached to the outer sheath **282** by way of the multiple projections **318** engaging the apertures **316** formed in the outer tube **282**. As shown in FIG. **30**, the protective sheath **288** comprises a curved substantially arcuate bottom surface **314** to slidingly engage bone. The curved bottom surface **314** comprises a convex portion **315** at a distal end and a concave portion **317** at a proximal end. The protective sheath **288** may be formed of any polymeric material as previously discussed with respect to FIGS. **22-25**.

The end effector **304** is illustrated in a clamp open position. The clamp arm assembly **284** is preferably pivotally mounted to the distal end of the outer tube **282** at pivot points **290**A, B such that the clamp arm assembly **284** can rotate in the direction shown by arrows **294**, **298**. The clamp arm assembly **284** preferably includes clamp arms **306**A, B and corresponding pivot pins **291**A, B on either side to engage the pivot points **290**A, B. The distal end of the inner tube **312** comprises fingers or flanges **313**A and **313**B (not shown) that extend therefrom. The fingers **313**A, B have corresponding openings **313**A and **313**B (not shown) to receive posts **315**A and **315**B (not shown) of the clamp arms **306**A, B. When the inner tube **312** is moved axially, the fingers **313**A, B move axially forwardly or rearwardly and engage the corresponding posts **315**A, B of the clamp arms **306**A, B to open and close the clamp arm assembly **284**. For example, when the inner tube **312** moves axially rearwardly or is retracted towards the proximal end in the direction indicated by arrow **292**, the clamp arm assembly **284** opens in the direction indicated by arrow **294**. When the inner tube **312** moves axially or is advanced towards to the distal end in the direction indicated by arrow **296** the clamp arm assembly **284** closes in the direction indicated by arrow **298**. The outer tube **282** remains fixed and the apertures **316** are configured to receive the projecting members **318** from the partially circumferentially extending portion **310** of the protective sheath **288**. The proximal partially circumferentially extending portion **310** of the protective sheath **288** is thus fixedly mounted to the outer tube **282**. In one embodiment, the proximal partially circumferentially extending portion **310** of the protective sheath **288** may be formed of similar materials as the protective sheath **288** or may be formed of other substantially rigid materials.

The clamp arm **306** includes the tissue pad **300** attached thereto for squeezing tissue between the ultrasonic blade **286** and the clamp arm assembly **300**. The tissue pad **300** is preferably formed of a polymeric or other compliant material and engages the ultrasonic blade **286** when the clamp arm **306** is in its closed position. Preferably, the tissue pad **300** is formed of a material having a low coefficient of friction but which has substantial rigidity to provide tissue-grasping capability, such as, for example, TEFLON, a trademark name of E. I. Du Pont de Nemours and Company for the polymer polytetraflouroethylene (PTFE). The tissue pad **300** may be mounted to the clamp arm **300** by an adhesive, or preferably by a mechanical fastening arrangement. Serrations **308** are formed in the clamping surfaces of the tissue pad **300** and extend perpendicular to the axis of the ultrasonic blade **286** to allow tissue to be grasped, manipulated, coagulated and cut without slipping between the clamp arm **306** and the ultrasonic blade **286**.

FIGS. **32-35** are cross-sectional views of various embodiments of ultrasonic surgical instruments **350**, **352**, **354**, **356** taken along the longitudinal axis. The ultrasonic surgical instruments **350**, **352**, **354**, **356** comprise respective fixedly attached protective sheaths **358**, **364**, **370**, **376**. As previously discussed, fixedly attached means that the protective sheaths are not deployable and remain in the position shown in FIGS. **32-35** during use of the instruments **350**, **352**. As shown in FIGS. **32-35**, the ultrasonic surgical instrument **350**, **352**, **354**, **356** each comprise the outer tube **282** that extends from a handpiece assembly (e.g., the handpiece assembly **60** shown in FIG. **1**). The outer tube **282** has a substantially circular cross-section and a longitudinal opening or aperture **302** to receive the inner tube **312**. Located at the distal end of the ultrasonic surgical instrument **350** is an end effector **304** for performing various tasks, such as, for example, grasping tissue, cutting tissue and the like. It is contemplated that the end effector **304** may be formed in any suitable configuration. The ultrasonic surgical instrument **350**, **352**, **354**, **356** may be employed with the ultrasonic system **10**.

The end effector **304** comprises the non-vibrating clamp arm assembly **284**, an ultrasonic blade **286**, and a protective sheath **354**. The clamp arm assembly **284** is preferably pivotally attached to the distal end of the outer tube **282** at the pivot point **290**. The clamp arm assembly **284** comprises a tissue pad **300**. As previously discussed, the ultrasonic

blade **286** may be coupled to the ultrasonic transmission waveguide **104** or may be formed as a unitary piece therewith and may be actuated by the ultrasonic system **10**.

The protective sheaths **358**, **364**, **370**, **376** are generally well suited for glidingly engaging the surface of the bone to prevent damage to the bone while the ultrasonic blade **286** removes muscle tissue from the bone and to dissipate thermal energy generated by the ultrasonic blade **286** while cutting. The protective sheaths **358**, **364**, **370**, **376** may be fixedly coupled to the ultrasonic blade **286** or to the outer tube **282** and are not user deployable. An air gap **320** between the bottom surface **322** of the ultrasonic blade **286** and the fixed protective sheaths **358**, **364**, **370**, **376** provides a space for irrigation fluid to pass therebetween to dissipate thermal energy generated by the ultrasonic blade **286** while cutting. In the embodiments illustrated in FIGS. **32-35**, the fixedly mounted protective sheaths **358**, **364**, **370**, **376** each comprise the proximal partially circumferentially extending portion **310** that overlaps and fixedly engages the outer tube **282**. As previously discussed, the proximal partially circumferentially extending portion **310** comprises multiple projections **318** to engage the apertures **316** formed in the outer tube **282** and thus the protective sheaths **358**, **364**, **370**, **376** are fixedly secured within the outer tube **282**. The alternative embodiments, the fixed protective sheaths **358**, **364**, **370**, **376** may be attached to an inner tube positioned within the outer tube **282**. The fixed protective sheaths **358**, **364**, **370**, **376** each comprise a distal portion comprising respective tapered bodies **384**, **388**, **392**, **398** that extend longitudinally beyond the distal portion of the ultrasonic blade **286** to protect the distal cutting edge **324** of the ultrasonic blade **286**. In other embodiments, the tapered bodies **384**, **388**, **392**, **398** may extend laterally to protect longitudinal portions of the ultrasonic blade **286**. The fixed protective sheaths **358**, **364**, **370**, **376** each comprise respective substantially planar sheet portions **359**, **365**, **371**, **377** extending longitudinally between the distal tapered bodies **384**, **388**, **392**, **398** and the proximal partially circumferentially extending portion **310** to shield the bottom surface **322** of the ultrasonic blade **286**. The protective sheaths **358**, **364**, **370**, **376** may be formed of any polymeric material as previously discussed with respect to FIGS. **22-25**.

As shown in FIG. **32**, the fixed protective sheath **358** comprises the tapered body **360** at a distal end that extends longitudinally beyond the distal end of the ultrasonic blade **286**. The tapered body **360** comprises a substantially planar top surface **362** and a substantially planar bottom surface **382** that taper from a proximate end to a blunt distal end **384**.

As shown in FIG. **33**, the fixed protective sheath **364** comprises the tapered body **366** at a distal end that extends longitudinally beyond the distal end of the ultrasonic blade **286**. The tapered body **366** comprises a substantially planar top surface **368** and a substantially planar bottom surface **386** that taper from a proximate end to a blunt distal end **388**. The substantially planar top and bottom surfaces **368**, **386** have corresponding radiused contoured surfaces that meet the blunt surface **388**.

As shown in FIG. **34**, the fixed protective sheath **370** comprises the tapered body **378** at a distal end that extends longitudinally beyond the distal end of the ultrasonic blade **286**. The tapered body **378** comprises a curved top surface **374** and a curved bottom surface **390** that taper from a proximate end to a sharp distal end **392**.

As shown in FIG. **35**, the fixed protective sheath **376** comprises the tapered body **378** at a distal end that extends longitudinally beyond the distal end of the ultrasonic blade **286**. The tapered body **378** comprises a substantially planar top surface **396** and a substantially curved bottom surface **394** that taper from a proximate end to a sharp distal end **398**.

FIGS. **36-37** are cross-sectional views of one embodiment of an ultrasonic surgical instrument **400** taken along the longitudinal axis. The ultrasonic surgical instrument **400** may be employed with the ultrasonic system **10**. The ultrasonic surgical instrument **400** comprises a deployable protective sheath **402**. In one embodiment, the deployable protective sheath **402** may be deployed by a user during a surgical procedure. Deployable means that the deployable protective sheath **402** may be advanced to a distal end in the direction indicated by arrow **404** to be put into use and may be retracted to a proximate end in the direction indicated by arrow **406** when it is to be taken out of use. The deployable protective sheath **402** comprises a distal portion **401** that substantially shields the bottom surface **322** of the ultrasonic blade **286** when it is deployed. The deployable protective sheath **402** comprises a proximate portion **403** that extends to the handpiece assembly (e.g., the handpiece assembly **60** shown in FIG. **1**) where it is coupled to a protective sheath deploying and retracting mechanism. The distal portion **401** may be formed slightly thicker then the proximal portion **403**. The deployable protective sheath **402** may be formed of any polymeric material as previously discussed with respect to FIGS. **22-25**. In one embodiment, the proximal portion **403** may be formed of the same material as the distal portion **401** of the deployable protective sheath **402**. In other embodiments, the proximal portion **403** may be formed of a different more durable material than the distal portion **401** of the deployable protective sheath **402** to withstand repeated deployments and retractions. For example, the proximal portion **403** may be formed of metal or other durable material to withstand the moderate forces required to hold the deployable protective sheath **402** in place during deployment, retraction, and use.

The ultrasonic surgical instrument **400** comprises the outer tube **282** that extends from the handpiece assembly **456**. The outer tube **282** has a substantially circular cross-section and a longitudinal opening or aperture **302** to receive the inner tube **312**. Located at the distal end of the ultrasonic surgical instrument **350** is an end effector **304** for performing various tasks, such as, for example, grasping tissue, cutting tissue and the like. It is contemplated that the end effector **304** may be formed in any suitable configuration. The end effector **304** comprises the non-vibrating clamp arm assembly **284**, an ultrasonic blade **286**, and the deployable protective sheath **402**. The clamp arm assembly **284** is preferably pivotally attached to the distal end of the outer tube **282** at the pivot point **290**. The clamp arm assembly **284** comprises a tissue pad **300**. As previously discussed, the ultrasonic blade **286** may be coupled to the ultrasonic transmission waveguide **104** or may be formed as a unitary piece therewith.

When the deployable protective sheath **402** is advanced in the direction indicated by arrow **404**, it is generally well suited for glidingly engaging the surface of the bone to prevent damage to the bone while the ultrasonic blade **286** removes muscle tissue from the bone and to dissipate thermal energy generated by the ultrasonic blade **286** while cutting. The deployable protective sheath **402** also is well suited to shield the bottom surface of the blade **322** from contact with other objects. The deployable protective sheath **402** may be retracted in the direction indicated by arrow **406** when it is not needed. When the deployable protective sheath **402** is deployed, the air gap **320** between the bottom surface **322** of the ultrasonic blade **286** and the protective

sheath **402** provides a space for irrigation fluid to pass therebetween to dissipate thermal energy generated by the ultrasonic blade **286** while cutting. In one embodiment, the deployable protective sheath **402** may retract within the inner tube **312**.

FIGS. **38-39** are cross-sectional views of one embodiment of an ultrasonic surgical instrument **410** taken along the longitudinal axis. The ultrasonic surgical instrument **410** comprises a deployable protective sheath **412**. In one embodiment, the deployable protective sheath **412** may be deployed by a user during a surgical procedure. Deployable means that the deployable protective sheath **412** may be advanced to a distal end in the direction indicated by arrow **404** to be put in use and may be retracted to a proximate end in the direction indicated by arrow **406** to be put out of use. The deployable protective sheath **402** comprises a distal portion **407** that substantially covers the bottom surface **418** of the ultrasonic blade **414** when it is deployed. The deployable protective sheath **412** comprises a proximate portion **405** that extends to a handpiece assembly (e.g., the handpiece assembly **60** shown in FIG. **1**) where it is coupled to a protective sheath deploying and retracting mechanism. The distal portion **407** may be formed slightly thicker then the proximal portion **405**. The distal portion comprises a vertically extending projection **420** to protect the cutting edge **416** of the ultrasonic blade **414**. The projection **420** is adapted to engage and compress the bottom surface of the ultrasonic blade **414** when it is retracted. The deployable protective sheath **402** may be formed of any polymeric material as previously discussed with respect to FIGS. **22-25**. In one embodiment, the proximal portion **405** may be formed of the same material as the distal portion **407** of the deployable protective sheath **412**. In other embodiments, the proximal portion **405** may be formed of a different more durable material than the distal portion **407** of the deployable protective sheath **412** to withstand repeated deployments and retractions. For example, the proximal portion **405** of the deployable protective sheath **412** may be formed of metal or other durable material to withstand the moderate forces required to hold the deployable protective sheath **412** in place during deployment, retraction, and use.

The ultrasonic surgical instrument **410** comprises the outer tube **282** that extends from the handpiece assembly **456**. The outer tube **282** has a substantially circular cross-section and a longitudinal opening or aperture **302** to receive the inner tube **312**. Located at the distal end of the ultrasonic surgical instrument **350** is an end effector **304** for performing various tasks, such as, for example, grasping tissue, cutting tissue and the like. It is contemplated that the end effector **304** may be formed in any suitable configuration. The end effector **304** comprises the non-vibrating clamp arm assembly **284**, an ultrasonic blade **414** with a distal chisel-shaped cutting edge **416**, and the deployable protective sheath **412**. The clamp arm assembly **284** is preferably pivotally attached to the distal end of the outer tube **282** at the pivot point **290**. The clamp arm assembly **284** comprises a tissue pad **300**. As previously discussed, the ultrasonic blade **286** may be coupled to the ultrasonic transmission waveguide **104** or may be formed as a unitary piece therewith.

When the deployable protective sheath **412** is advanced in the direction indicated by arrow **404**, it is generally well suited for gliding along the surface of the bone to prevent damage to the bone while the ultrasonic blade **414** removes muscle tissue from the bone. The deployable protective sheath **412** may be retracted in the direction indicated by arrow **406** when it is not needed. When the deployable protective sheath **412** is deployed, the air gap **320** between the bottom surface **418** of the ultrasonic blade **414** and the protective deployable sheath **412** provides a space for irrigation fluid to pass therebetween. The protective deployable sheath **412** retracts inside the inner tube **312**.

FIG. **40** is cross-sectional view of one embodiment of an ultrasonic surgical instrument **430** taken along the longitudinal axis. The ultrasonic surgical instrument **430** may be employed with the ultrasonic system **10**. The ultrasonic surgical instrument **430** comprises a fixedly attached protective sheath **432**. As previously discussed, fixedly attached means that the protective sheath is not deployable and remains in the position shown in FIG. **40** for the usable life of the instrument **430**. As shown in FIG. **40**, the ultrasonic surgical instrument **430** comprises the outer tube **282** that extends from the handpiece assembly **456**. The outer tube **282** has a substantially circular cross-section and a longitudinal opening or aperture **302** to receive the inner tube **312**. Located at the distal end of the ultrasonic surgical instrument **350** is an end effector **304** for performing various tasks, such as, for example, grasping tissue, cutting tissue and the like. It is contemplated that the end effector **304** may be formed in any suitable configuration.

The end effector **304** comprises the non-vibrating clamp arm assembly **284**, an ultrasonic blade **286**, and a protective sheath **432**. The clamp arm assembly **284** is preferably pivotally attached to the distal end of the outer tube **282** at the pivot points **290**A, B. The clamp arm assembly **284** comprises a tissue pad **300**. As previously discussed, the ultrasonic blade **286** may be coupled to the ultrasonic transmission waveguide **104** or may be formed as a unitary piece therewith.

The protective sheath **432** is generally well suited for glidingly engaging the surface of the bone to prevent damage to the bone while the ultrasonic blade **286** removes muscle tissue from the bone and to dissipate thermal energy generated by the ultrasonic blade **286** while cutting. The protective sheath **432** is also well suited to shield the bottom surface **322** of the blade **286**. The protective sheath **432** may be fixedly coupled to the ultrasonic blade **286** or to the outer tube **282** by way of projections **318** (FIGS. **27-31**) and apertures **316** and is not user deployable. An air gap **320** between the bottom surface **322** of the ultrasonic blade **286** and the fixed protective sheath **432** provides a space for irrigation fluid to pass therebetween to dissipate thermal energy generated by the ultrasonic blade **286** while cutting. The fixed protective sheath **432** comprises the proximal partially circumferentially extending portion **310** that overlaps and fixedly engages the outer tube **282**. As previously discussed, the proximal partially circumferentially extending portion **310** comprises the multiple projections **318** to engage the apertures **316** formed in the outer tube **282**. The fixed protective sheath **432** is attached to the outer tube **282**. The fixed protective sheath **432** comprises discrete projections or bumps **434** formed on a top surface **436** thereof. There may be one or multiple bumps **434** formed on the top surface **436** of the protective sheath **432**. The bumps **434** decrease the contact surface area between the ultrasonic blade **286** and the protective sheath **432**, which may occur during a procedure when the protective sheath is used as a fulcrum. This may reduce the heat or thermal energy generated by the ultrasonic blade **286** and the load on the ultrasonic blade **286**. The protective sheath **432** may be formed of any polymeric material as previously discussed with respect to FIGS. **22-25**.

FIGS. **41-43** illustrate one embodiment of an ultrasonic system **400**. FIG. **41** is a side view of the ultrasonic system **400**. One embodiment of the ultrasonic system **400** com-

prises the ultrasonic signal generator **12** coupled to the ultrasonic transducer **14**, a hand piece housing **452**, and an end effector **304** (shown in FIG. **27**) forming an ultrasonic instrument **456**. The ultrasonic instrument **456** comprises a curved lever member **454** coupled to the protective sheath **402** to move the protective sheath **402** axially. The ultrasonic instrument **456** also comprises a slideable member **458**B coupled to the inner tube **312**. The slideable member **458**B moves axially within a slot that defines walls **460**B formed in the hand piece housing **452** to actuate the end effector **304**.

FIG. **42** is a cross-sectional side view of the ultrasonic system **456** shown in FIG. **41** and a cross-sectional view of various tube assemblies to couple the hand piece housing **452** with an end effector. As shown in FIG. **42**, the curved lever member **454** is pivotally mounted to the hand piece housing **452** at pivot point **462** such that it can rotate in the direction indicated by arrows **463**A, B. Link members **464**A and **464**B (not shown) are pivotally coupled at a proximate end to pivot points **466**A and **466**B (not shown) and at a distal end to pivot points **468**A and **468**B (not shown). When the curved lever member **454** is rotated about the pivot point **462** in the direction indicated by arrow **463**A the sheath **402** moves axially in the direction indicated by arrow **465**A in its deployed position. When the curved lever member **454** is moved in the direction indicated by arrow **463**B the sheath **402** moves axially in the direction indicated by arrow **465**B n its retracted position.

FIG. **43** is a bottom cross-sectional view of the ultrasonic instrument **456** shown in FIG. **41**. As shown in FIG. **43**, the slideable members **458**A, B are held in a locked position by respective springs **472**A, B which engage and compress the slideable members **458**A, B against an interior portion of the hand piece housing **452**. The interior portion of the hand piece housing **452** comprises rows of serrated edges **474**A, B formed along inner portions of the walls **460**A, B defined by the slot. Notched members **480**A, B are mounted to flanges formed on the slideable members **458**A, B and are configured to engage the respective serrated edges **474**A, B formed in the respective walls **460**A, B. Bodies **470**A, B are formed integrally with the inner tube **312** or are attached to thereto. When a force is applied in the direction indicated by arrows **476**, B against the respective springs **472**A, B, the slideable members **458**A, B can be moved axially as indicated by arrows **478**A, B. Thus the inner tube **312** moves axially to actuate the clamp arm assembly **284** of the end effector **304**.

In alternative embodiments, the ultrasonic instrument **456** may be adapted and configured such that the curved lever member **454** is coupled to the inner tube **312** and the slideable members **458**A, B are coupled to the protective sheath **402**. Accordingly, rotating the curved lever member **454** moves the inner tube **312** axially to actuate the end effector **304**. And the slideable members **458**A, B can be used to axially deploy and retract the protective sheath **402**.

FIGS. **44-51** illustrate one embodiment of an ultrasonic system **500**. FIG. **44** is a side view of the ultrasonic instrument **506** with the deployable protective sheath **402** in a stowed or retracted position. FIG. **45** is a top view of the ultrasonic instrument **506** with the deployable protective sheath **402** in the stowed or retracted position taken along line **45-45** in FIG. **44**. FIG. **46** is a side view of the ultrasonic instrument **506** with the deployable protective sheath **402** in a deployed position. FIG. **47** is a top view of the ultrasonic instrument **506** in the deployed position taken along line **47-47** in FIG. **46**.

With reference to FIGS. **44-47**, one embodiment of the ultrasonic instrument **500** is coupled to an ultrasonic signal generator **12** and comprises an ultrasonic transducer **14**, a hand piece housing **502**, and an end effector **504** forming an ultrasonic instrument **506**. The ultrasonic instrument **506** comprises a slideable member **508** coupled to the deployable protective sheath **402** in any suitable manner as previously discussed. The slideable member **508** moves axially within a slot **510** formed in the hand piece housing **502** to actuate or deploy/retract the deployable protective sheath **402**. The slideable member **508** is shown in the deployable protective sheath **402** retracted or stowed position. When the slideable member **508** moves axially in the direction indicated by arrow **514** the deployable protective sheath **402** also moves axially in the same direction to its retracted or stowed position. When the slideable member **508** moves axially in the direction indicated by arrow **516** the deployable protective sheath **402** also moves axially in the same direction to its deployed position. Once deployed, the deployable protective sheath **402** may be locked in place with any suitable locking mechanism. An air gap **518** provides a path for irrigation fluid to cool the ultrasonic blade **512** while cutting. The end effector **504** comprises an ultrasonic blade **512** coupled to the ultrasonic transducer **14** by the ultrasonic transmission waveguide **104** as previously discussed. The fixed outer tube **282** (or sheath) shields the surgeon and the patient from unintended contact with the ultrasonic blade **512** and the ultrasonic transmission waveguide **104**.

FIG. **48** is a more detailed side view of the ultrasonic instrument **506** with the deployable protective sheath **402** in a stowed or retracted position. FIG. **49** is a more detailed top view of the ultrasonic instrument **506** with the protective sheath **402** in the stowed or retracted position taken along line **49-49** in FIG. **48**. FIG. **50** is a more detailed side view of the ultrasonic instrument **506** with the deployable protective sheath **402** in a deployed position. FIG. **51** is a more detailed top view of the ultrasonic instrument **506** in the deployed position taken along line **51-51** in FIG. **50**.

With reference to FIGS. **44-51**, the deployable protective sheath **402** is user deployable by moving the slideable member **508** in the direction indicated by arrow **516**. The distal end of the deployable protective sheath **402** may be formed of any polymeric material as previously discussed with respect to FIGS. **22-25**. The proximal end of the deployable protective sheath **402** may be formed of metal or other durable material to withstand the moderate forces required to hold the deployable protective sheath **402** in place during deployment, retraction, and use.

FIG. **50** shows the deployable protective sheath **402** in the deployed position in a substantially relaxed state as indicated by the air gap **518** between the deployable protective sheath **402** and the ultrasonic blade **512**. Thus, in a stress free state, the deployable protective sheath **402** does not contact the ultrasonic blade **512**. When the deployable protective sheath **402** is used as a fulcrum, however, it may contact the ultrasonic blade **512** for some period of time. However, when the pressure is released on the ultrasonic instrument **500**, the deployable protective sheath **402** is sufficiently resilient to return to its initial position, thus restoring the air gap **518** between the protective sheath **412** and the ultrasonic blade **512**. If needed, a separate spring may be added to the deployable protective sheath **402** to ensure that it no longer contacts the ultrasonic blade **512** once the pressure is released. In the illustrated embodiment, the deployable protective sheath **402** is shown to be smaller than the outline of the ultrasonic blade **512**. This enables the user to cut tissue with the distal tip and both edges of the ultrasonic blade **512** when the deployable protective sheath **402** is

deployed. In alternate embodiments, the deployable protective sheath **402** may also cover some or all of the three edges of the ultrasonic blade **512**.

FIGS. **52-55** illustrate one embodiment of an ultrasonic surgical instrument **550** comprising an end effector **552**. The ultrasonic surgical instrument may be employed with the ultrasonic system **10**. FIG. **52** is a top perspective view of one embodiment of the ultrasonic surgical instrument **550**. FIG. **53** is a partial cross-sectional view of the ultrasonic surgical instrument **550** shown in FIG. **52** taken along the longitudinal axis of the ultrasonic surgical instrument **550**. FIG. **54** is a cross-sectional view of the ultrasonic surgical instrument **550** taken along lines **54-54** shown in FIG. **53**. FIG. **55** is a top view of the ultrasonic surgical instrument **550**.

With reference now to FIGS. **52-55**, the ultrasonic surgical instrument **550** comprises an outer member or outer tube **282** that extends from the handpiece assembly **60** or **456** (FIG. **1** or FIGS. **41-44**). The outer tube **282** has a substantially circular cross-section and a longitudinal opening or aperture **302** to receive an inner member or an inner tube **312**. The outer tube **282** has a substantially circular cross-section and may be fabricated from stainless steel. It will be recognized that the outer tube **282** may be constructed from any suitable material and may have any suitable cross-sectional shape. Located at the distal end of the ultrasonic surgical instrument **550** is an end effector **552** for performing various tasks, such as, for example, grasping tissue, cutting tissue and the like. It is contemplated that the end effector **304** may be formed in any suitable configuration.

The end effector **552** comprises a non-vibrating clamp arm assembly **284**, an ultrasonic blade **286**, and a protective sheath **554**. The end effector **552** is illustrated in a clamp open position and operates in a manner discussed above. The clamp arm assembly **284** comprises a tissue pad **300**. The non-vibrating clamp arm assembly **284** is to grip tissue or compress tissue against the ultrasonic blade **286**, for example. The protective sheath **552** defines a chamber **556** in fluid communication with irrigation channels or tubes **558**A, B to receive irrigation fluid from the irrigation channels **558**A, B. The irrigation channels **558**A, B couple to conventional irrigation devices by way of ports **560**A, B (not shown) at the proximate end of the ultrasonic instrument **550**. The irrigation channels **558**A, B deliver irrigation fluid to the chamber **556** to dissipate thermal energy generated by the ultrasonic blade **286** while cutting and carrying away pieces cut bone and tissue. Irrigation may be controlled manually by way of a control button on the handpiece or automatically wherein each time the ultrasonic instrument **550** is powered on a irrigation fluid release cam may be activated to release the irrigation fluid.

The ultrasonic blade **286** is generally well-suited for cutting, coagulating, and reshaping tissue. In one embodiment the ultrasonic blade **286** may be configured as an ultrasonic surgical elevator blade generally well-suited to separate muscle tissue from bone. Nevertheless, the ultrasonic blade **286** may be employed in various other therapeutic procedures. The ultrasonic blade **286** comprises a cutting edge **324** at a distal portion and may comprise cutting edges extending longitudinally along the sides of the ultrasonic blade **286**. The ultrasonic blade **286** comprises a bottom surface **322** adjacent to the protective sheath **554**. The ultrasonic blade **286** may be coupled to the ultrasonic transmission waveguide **104** or may be formed as a unitary piece therewith.

The protective sheath **554** is generally well suited for glidingly engaging the surface of the bone to prevent damage to the bone while the ultrasonic blade **286** removes muscle tissue from the bone and to dissipate thermal energy generated by the ultrasonic blade **286** while cutting. The protective sheath **554** may be fixedly coupled to the ultrasonic instrument **550** or may be user deployable. In the illustrated embodiment, the protective sheath **550** is fixedly mounted to the outer tube **282** as previously discussed. The protective sheath **288** comprises the proximal partially circumferentially extending portion **310** that overlaps and fixedly engages the outer tube **282**. As previously discussed, the proximal partially circumferentially extending portion **310** comprises multiple projections to engage the apertures **316** formed in the outer tube **282**. When fixedly attached, the protective sheath **554** may be attached to the outer tube **282**. When the protective sheath **554** is deployed, it may be attached to an inner tube received within the inner tube **312** that is slidingly engaged to a deployment mechanism on the handpiece portion of the ultrasonic instrument **550** as previously discussed. The protective sheath **554** comprises a bottom surface **560** to slidingly engage bone. The protective sheath **554** may be formed of any polymeric material as previously discussed with respect to FIGS. **22-25**.

The devices disclosed herein can be designed to be disposed of after a single use, or they can be designed to be used multiple times. In either case, however, the device can be reconditioned for reuse after at least one use. Reconditioning can include any combination of the steps of disassembly of the device, followed by cleaning or replacement of particular pieces, and subsequent reassembly. In particular, the device can be disassembled, and any number of the particular pieces or parts of the device can be selectively replaced or removed in any combination. Upon cleaning and/or replacement of particular parts, the device can be reassembled for subsequent use either at a reconditioning facility, or by a surgical team immediately prior to a surgical procedure. Those skilled in the art will appreciate that reconditioning of a device can utilize a variety of techniques for disassembly, cleaning/replacement, and reassembly. Use of such techniques, and the resulting reconditioned device, are all within the scope of the present application.

Preferably, the various embodiments described herein will be processed before surgery. First, a new or used instrument is obtained and if necessary cleaned. The instrument can then be sterilized. In one sterilization technique, the instrument is placed in a closed and sealed container, such as a plastic or TYVEK bag. The container and instrument are then placed in a field of radiation that can penetrate the container, such as gamma radiation, x-rays, or high-energy electrons. The radiation kills bacteria on the instrument and in the container. The sterilized instrument can then be stored in the sterile container. The sealed container keeps the instrument sterile until it is opened in the medical facility.

It is preferred that the device is sterilized. This can be done by any number of ways known to those skilled in the art including beta or gamma radiation, ethylene oxide, steam.

Although various embodiments have been described herein, many modifications and variations to those embodiments may be implemented. For example, different types of end effectors may be employed. Also, where materials are disclosed for certain components, other materials may be used. The foregoing description and following claims are intended to cover all such modification and variations.

Any patent, publication, or other disclosure material, in whole or in part, that is said to be incorporated by reference herein is incorporated herein only to the extent that the incorporated materials does not conflict with existing defi-

nitions, statements, or other disclosure material set forth in this disclosure. As such, and to the extent necessary, the disclosure as explicitly set forth herein supersedes any conflicting material incorporated herein by reference. Any material, or portion thereof, that is said to be incorporated by reference herein, but which conflicts with existing definitions, statements, or other disclosure material set forth herein will only be incorporated to the extent that no conflict arises between that incorporated material and the existing disclosure material.

What is claimed is:

1. An ultrasonic surgical system, comprising:
a housing assembly;
a shaft assembly extending from the housing assembly, wherein the shaft assembly comprises:
an outer tube; and
an inner tube movable relative to the outer tube;
an ultrasonic waveguide extending through the shaft assembly;
an end effector, comprising:
an ultrasonic blade extending from the ultrasonic waveguide; and
a clamp arm moveable relative to the ultrasonic blade between an open position and a closed position, wherein the clamp arm is movable based on movement of the inner tube relative to the outer tube; and
a protective sheath configured to shield a portion of the ultrasonic blade, wherein the protective sheath is moveable between a retracted position and a deployed position;
wherein the housing assembly comprises:
a housing;
a lever operably coupled to the housing and the protective sheath, wherein the protective sheath is movable between the retracted position and the deployed position based on movement of the lever relative to the housing; and
an actuator operably coupled to the inner tube, wherein the actuator is moveable between a first position and a second position, and wherein the clamp arm is configured to move toward the closed position based on movement of the actuator toward the second position.

2. The ultrasonic surgical system of claim **1**, wherein the housing assembly defines a slot, and wherein the actuator is movable within the slot.

3. The ultrasonic surgical system of claim **1**, wherein the housing comprises serrated edges, wherein the actuator comprises a notched member, and wherein the actuator is prevented from moving between the first position and the second position based on the notched member engaging the serrated edges.

4. The ultrasonic surgical system of claim **3**, wherein the housing assembly further comprises a spring configured to bias the notched member into engagement with the serrated edges.

5. The ultrasonic surgical system of claim **1**, wherein the housing assembly further comprises a link pivotably coupled to the lever and the protective sheath.

6. The ultrasonic surgical system of claim **1**, wherein the protective sheath is configured to move toward the retracted position based on movement of the lever toward the housing.

7. The ultrasonic surgical system of claim **1**, wherein the actuator is slidable between the first position and the second position.

8. An ultrasonic surgical system, comprising:
a housing assembly;
a shaft assembly extending from the housing assembly, wherein the shaft assembly comprises:
an outer tube; and
an inner tube movable relative to the outer tube;
an ultrasonic waveguide extending through the shaft assembly;
an end effector, comprising:
an ultrasonic blade extending from the ultrasonic waveguide; and
a clamp arm pivotable relative to the ultrasonic blade between an open position and a closed position, wherein the clamp arm is movable based on movement of the inner tube relative to the outer tube; and
wherein the housing assembly comprises:
a housing, defining:
a first slot on a first lateral side thereof; and
a second slot of a second lateral side thereof;
a first actuator operably coupled to the inner tube, wherein the first actuator is axially moveable through the first slot; and
a second actuator operably coupled to the inner tube, wherein the second actuator is axially moveable through the second slot, and wherein the clamp arm is configured to move between the open position and the closed position based on cooperative movement of the first actuator and the second actuator through the first slot and the second slot, respectively.

9. The ultrasonic surgical system of claim **8**, wherein each of the first actuator and the second actuator are moveable between a locked configuration and an unlocked configuration.

10. The ultrasonic surgical system of claim **9**, wherein the inner tube defines a longitudinal axis, and wherein the first actuator and the second actuator are moveable toward their respective unlocked configurations based on movement of the first actuator and the second actuator toward the longitudinal axis.

11. The ultrasonic surgical system of claim **10**, wherein the housing assembly further comprises:
a first spring configured to bias the first actuator toward a first locked configuration; and
a second spring configured to bias the second actuator toward a second locked configuration.

12. The ultrasonic surgical system of claim **11**, wherein the housing comprises:
first serrated edges, wherein the first actuator comprises a first member, and wherein the first member is configured to engage the first serrated edges based on the first actuator being in the first locked configuration; and
second serrated edges, wherein the second actuator comprises a second member, and wherein the second member is configured to engage the second serrated edges based on the second actuator being in the second locked configuration.

13. The ultrasonic surgical system of claim **8**, further comprising a protective sheath configured to shield a portion of the ultrasonic blade, wherein the protective sheath is moveable between a retracted position and a deployed position.

14. The ultrasonic surgical system of claim **13**, wherein the housing assembly further comprises a lever operably coupled to the housing and the protective sheath, and wherein the protective sheath is movable between the retracted position and the deployed position based on pivotable movement of the lever relative to the housing.

15. An ultrasonic surgical system, comprising:

a housing assembly;

a shaft assembly extending from the housing assembly, wherein the shaft assembly comprises:

an outer tube; and

an inner tube movable relative to the outer tube, wherein the inner tube defines a longitudinal axis;

an ultrasonic waveguide extending through the shaft assembly;

an end effector, comprising:

an ultrasonic blade extending from the ultrasonic waveguide; and

a clamp arm moveable relative to the ultrasonic blade between an open position and a closed position, wherein the clamp arm is movable based on movement of the inner tube relative to the outer tube; and

a protective sheath configured to shield a portion of the ultrasonic blade, wherein the protective sheath is moveable between a retracted position and a deployed position;

wherein the housing assembly comprises:

a housing;

a lever operably pivotably to the housing, wherein pivotable movement of the lever is configured to effect a first action of the ultrasonic surgical system; and

a actuator, wherein axial movement of the actuator along the longitudinal axis is configured to effect a second action of the ultrasonic surgical system, and wherein the actuator is prevented from effecting the second action of the ultrasonic surgical system absent a force being applied to the actuator in a direction toward the longitudinal axis.

16. The ultrasonic surgical system of claim **15**, wherein:

the housing comprises serrated edges;

the actuator comprises a member; and

engagement of the member with the serrated edges prevents the actuator from axially moving along the longitudinal axis between a first position and a second position.

17. The ultrasonic surgical system of claim **16**, wherein the housing assembly further comprises a spring configured to bias the member into engagement with the serrated edges absent the force.

18. The ultrasonic surgical system of claim **15**, wherein:

the first action of the ultrasonic surgical system comprises moving the protective sheath between the retracted position and the deployed position; and

the second action of the ultrasonic surgical system comprises moving the clamp arm between the open position and the closed position.

19. The ultrasonic surgical system of claim **15**, wherein:

the first action of the ultrasonic surgical system comprises moving the clamp arm between the open position and the closed position; and

the second action of the ultrasonic surgical system comprises moving the protective sheath between the retracted position and the deployed position.

* * * * *