US012387716B2

(12) **United States Patent**
Coucke et al.

(10) **Patent No.: US 12,387,716 B2**
(45) **Date of Patent: Aug. 12, 2025**

(54) **WAKEWORDLESS VOICE QUICKSTARTS**

(71) Applicant: **Sonos, Inc.**, Santa Barbara, CA (US)

(72) Inventors: **Alice Coucke**, Paris (FR); **Theodore Bluche**, Paris (FR); **Julien Balian**, Paris (FR); **Raffaele Tavarone**, Paris (FR)

(73) Assignee: **Sonos, Inc.**, Goleta, CA (US)

(*) Notice: Subject to any disclaimer, the term of this patent is extended or adjusted under 35 U.S.C. 154(b) by 459 days.

(21) Appl. No.: **17/340,590**

(22) Filed: **Jun. 7, 2021**

(65) **Prior Publication Data**

US 2021/0383796 A1 Dec. 9, 2021

Related U.S. Application Data

(60) Provisional application No. 63/036,189, filed on Jun. 8, 2020.

(51) **Int. Cl.**
G10L 15/16 (2006.01)
G10L 15/06 (2013.01)
(Continued)

(52) **U.S. Cl.**
CPC ***G10L 15/16*** (2013.01); ***G10L 15/063*** (2013.01); ***G10L 15/22*** (2013.01); *G10L 2015/088* (2013.01); *G10L 2015/223* (2013.01)

(58) **Field of Classification Search**
CPC G10L 15/16; G10L 15/063; G10L 15/22; G10L 2015/088; G10L 2015/223; G10L 17/00; G06F 3/167
See application file for complete search history.

(56) **References Cited**

U.S. PATENT DOCUMENTS

999,715 A 8/1911 Gundersen
4,741,038 A 4/1988 Elko et al.
(Continued)

FOREIGN PATENT DOCUMENTS

AU 2017100486 A4 6/2017
AU 2017100581 A4 6/2017
(Continued)

OTHER PUBLICATIONS

US 9,299,346 B1, 03/2016, Hart et al. (withdrawn)
(Continued)

Primary Examiner — Michael Colucci
(74) *Attorney, Agent, or Firm* — FORTEM IP LLP

(57) **ABSTRACT**

As noted above, example techniques relate to local voice control. A device may monitoring an input sound-data stream representing sound detected by the one or more microphones for keywords and generate a first keyword detection event corresponding to a voice input when one or more keyword engines detect sound data matching at least one first keyword of the one or more keywords. The device determines whether the second voice input matches a particular predetermined speaker profile of one or more predetermined speaker profiles. Based on (i) generating the first keyword detection event and (ii) determining that the second voice input includes sound data matching the particular predetermined speaker profile, the device performs a particular playback command associated with the at least one first keyword.

20 Claims, 19 Drawing Sheets

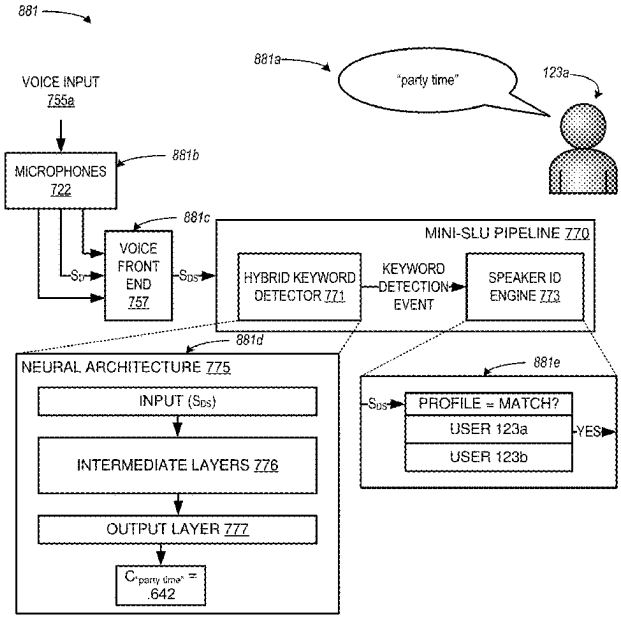

(51) **Int. Cl.**
G10L 15/08 (2006.01)
G10L 15/22 (2006.01)

(56) **References Cited**

U.S. PATENT DOCUMENTS

4,941,187 A 7/1990 Slater
4,974,213 A 11/1990 Siwecki
5,036,538 A 7/1991 Oken et al.
5,440,644 A 8/1995 Farinelli et al.
5,588,065 A 12/1996 Tanaka et al.
5,717,768 A 2/1998 Laroche
5,740,260 A 4/1998 Odom
5,761,320 A 6/1998 Farinelli et al.
5,857,172 A 1/1999 Rozak
5,923,902 A 7/1999 Inagaki
5,949,414 A 9/1999 Namikata et al.
6,032,202 A 2/2000 Lea et al.
6,070,140 A 5/2000 Tran
6,088,459 A 7/2000 Hobelsberger
6,219,645 B1 4/2001 Byers
6,256,554 B1 7/2001 DiLorenzo
6,301,603 B1 10/2001 Maher et al.
6,311,157 B1 10/2001 Strong
6,366,886 B1 4/2002 Dragosh et al.
6,404,811 B1 6/2002 Cvetko et al.
6,408,078 B1 6/2002 Hobelsberger
6,469,633 B1 10/2002 Wachter
6,522,886 B1 2/2003 Youngs et al.
6,594,347 B1 7/2003 Calder et al.
6,594,630 B1 7/2003 Zlokarnik et al.
6,611,537 B1 8/2003 Edens et al.
6,611,604 B1 8/2003 Irby et al.
6,631,410 B1 10/2003 Kowalski et al.
6,757,517 B2 6/2004 Chang
6,778,869 B2 8/2004 Champion
6,937,977 B2 8/2005 Gerson
7,099,821 B2 8/2006 Visser et al.
7,103,542 B2 9/2006 Doyle
7,130,608 B2 10/2006 Hollstrom et al.
7,130,616 B2 10/2006 Janik
7,143,939 B2 12/2006 Henzerling
7,174,299 B2 2/2007 Fujii et al.
7,228,275 B1 6/2007 Endo et al.
7,236,773 B2 6/2007 Thomas
7,295,548 B2 11/2007 Blank et al.
7,356,471 B2 4/2008 Ito et al.
7,383,297 B1 6/2008 Atsmon et al.
7,391,791 B2 6/2008 Balassanian et al.
7,483,538 B2 1/2009 McCarty et al.
7,516,068 B1 4/2009 Clark
7,571,014 B1 8/2009 Lambourne et al.
7,577,757 B2 8/2009 Carter et al.
7,630,501 B2 12/2009 Blank et al.
7,643,894 B2 1/2010 Braithwaite et al.
7,657,910 B1 2/2010 McAulay et al.
7,661,107 B1 2/2010 Van Dyke et al.
7,702,508 B2 4/2010 Bennett
7,705,565 B2 4/2010 Patino et al.
7,792,311 B1 9/2010 Holmgren et al.
7,853,341 B2 12/2010 McCarty et al.
7,961,892 B2 6/2011 Fedigan
7,987,294 B2 7/2011 Bryce et al.
8,014,423 B2 9/2011 Thaler et al.
8,019,076 B1 9/2011 Lambert
8,032,383 B1 10/2011 Bhardwaj et al.
8,041,565 B1 10/2011 Bhardwaj et al.
8,045,952 B2 10/2011 Qureshey et al.
8,073,125 B2 12/2011 Zhang et al.
8,073,681 B2 12/2011 Baldwin et al.
8,085,947 B2 12/2011 Haulick et al.
8,103,009 B2 1/2012 McCarty et al.
8,136,040 B2 3/2012 Fleming
8,165,867 B1 4/2012 Fish
8,233,632 B1 7/2012 MacDonald et al.
8,234,395 B2 7/2012 Millington
8,239,206 B1 8/2012 LeBeau et al.
8,255,224 B2 8/2012 Singleton et al.
8,284,982 B2 10/2012 Bailey
8,290,603 B1 10/2012 Lambourne
8,325,909 B2 12/2012 Tashev et al.
8,340,975 B1 12/2012 Rosenberger
8,364,481 B2 1/2013 Strope et al.
8,385,557 B2 2/2013 Tashev et al.
8,386,261 B2 2/2013 Mellott et al.
8,386,523 B2 2/2013 Mody et al.
8,423,893 B2 4/2013 Ramsay et al.
8,428,758 B2 4/2013 Naik et al.
8,453,058 B1 5/2013 Coccaro et al.
8,473,618 B2 6/2013 Spear et al.
8,483,853 B1 7/2013 Lambourne
8,484,025 B1 7/2013 Moreno et al.
8,489,398 B1 7/2013 Gruenstein
8,588,849 B2 11/2013 Patterson et al.
8,594,320 B2 11/2013 Faller
8,600,443 B2 12/2013 Kawaguchi et al.
8,620,232 B2 12/2013 Helsloot
8,639,214 B1 1/2014 Fujisaki
8,676,273 B1 3/2014 Fujisaki
8,710,970 B2 4/2014 Oelrich et al.
8,719,039 B1 5/2014 Sharifi
8,738,925 B1 5/2014 Park et al.
8,762,156 B2 6/2014 Chen
8,768,712 B1 7/2014 Sharifi
8,775,191 B1 7/2014 Sharifi et al.
8,831,761 B2 9/2014 Kemp et al.
8,831,957 B2 9/2014 Taubman et al.
8,848,879 B1 9/2014 Coughlan et al.
8,861,756 B2 10/2014 Zhu et al.
8,874,448 B1 10/2014 Kauffmann et al.
8,898,063 B1 11/2014 Sykes et al.
8,938,394 B1 1/2015 Faaborg et al.
8,942,252 B2 1/2015 Balassanian et al.
8,983,383 B1 3/2015 Haskin
8,983,844 B1 3/2015 Thomas et al.
9,002,024 B2 4/2015 Nakadai et al.
9,015,049 B2 4/2015 Baldwin et al.
9,042,556 B2 5/2015 Kallai et al.
9,047,857 B1 6/2015 Barton
9,060,224 B1 6/2015 List
9,070,367 B1 6/2015 Hoffmeister et al.
9,088,336 B2 7/2015 Mani et al.
9,094,539 B1 7/2015 Noble
9,098,467 B1 8/2015 Blanksteen et al.
9,124,650 B2 9/2015 Maharajh et al.
9,124,711 B2 9/2015 Park et al.
9,148,742 B1 9/2015 Koulomzin et al.
9,183,845 B1 11/2015 Gopalakrishnan et al.
9,190,043 B2 11/2015 Krisch et al.
9,208,785 B2 12/2015 Ben-David et al.
9,215,545 B2 12/2015 Dublin et al.
9,245,527 B2 1/2016 Lindahl
9,251,793 B2 2/2016 Lebeau et al.
9,253,572 B2 2/2016 Beddingfield, Sr. et al.
9,262,612 B2 2/2016 Cheyer
9,263,042 B1 2/2016 Sharifi
9,275,637 B1 3/2016 Salvador et al.
9,288,597 B2 3/2016 Carlsson et al.
9,300,266 B2 3/2016 Grokop
9,304,736 B1 4/2016 Whiteley et al.
9,307,321 B1 4/2016 Unruh
9,313,317 B1 4/2016 Lebeau et al.
9,318,107 B1 4/2016 Sharifi
9,319,816 B1 4/2016 Narayanan
9,324,322 B1 4/2016 Torok et al.
9,335,819 B1 5/2016 Jaeger et al.
9,354,687 B2 5/2016 Bansal et al.
9,361,878 B2 6/2016 Boukadakis
9,361,885 B2 6/2016 Ganong, III et al.
9,368,105 B1 6/2016 Freed et al.
9,373,329 B2 6/2016 Strope et al.
9,374,634 B2 6/2016 Macours
9,386,154 B2 7/2016 Baciu et al.
9,390,708 B1 7/2016 Hoffmeister
9,401,058 B2 7/2016 De La Fuente et al.

(56) **References Cited**

U.S. PATENT DOCUMENTS

9,412,392	B2	8/2016	Lindahl et al.
9,426,567	B2	8/2016	Lee et al.
9,431,021	B1	8/2016	Scalise et al.
9,443,516	B2	9/2016	Katuri et al.
9,443,527	B1	9/2016	Watanabe et al.
9,472,201	B1	10/2016	Sleator
9,472,203	B1	10/2016	Ayrapetian et al.
9,484,030	B1	11/2016	Meaney et al.
9,489,948	B1	11/2016	Chu et al.
9,491,033	B1	11/2016	Soyannwo et al.
9,494,683	B1	11/2016	Sadek
9,509,269	B1	11/2016	Rosenberg
9,510,101	B1	11/2016	Polleros
9,514,476	B2	12/2016	Kay et al.
9,514,747	B1	12/2016	Bisani et al.
9,514,752	B2	12/2016	Sharifi
9,516,081	B2	12/2016	Tebbs et al.
9,532,139	B1	12/2016	Lu et al.
9,536,541	B2	1/2017	Chen et al.
9,542,941	B1	1/2017	Weksler et al.
9,548,053	B1	1/2017	Basye et al.
9,548,066	B2	1/2017	Jain et al.
9,552,816	B2	1/2017	Vanlund et al.
9,554,210	B1	1/2017	Ayrapetian et al.
9,558,755	B1	1/2017	Laroche et al.
9,560,441	B1	1/2017	McDonough, Jr. et al.
9,576,591	B2	2/2017	Kim et al.
9,601,116	B2	3/2017	Casado et al.
9,615,170	B2	4/2017	Kirsch et al.
9,615,171	B1	4/2017	O'Neill et al.
9,626,695	B2	4/2017	Balasubramanian et al.
9,632,748	B2	4/2017	Faaborg et al.
9,633,186	B2	4/2017	Ingrassia, Jr. et al.
9,633,368	B2	4/2017	Greenzeiger et al.
9,633,660	B2	4/2017	Haughay et al.
9,633,661	B1	4/2017	Typrin et al.
9,633,671	B2	4/2017	Giacobello et al.
9,633,674	B2	4/2017	Sinha et al.
9,640,179	B1	5/2017	Hart et al.
9,640,183	B2	5/2017	Jung et al.
9,640,194	B1	5/2017	Nemala et al.
9,641,919	B1	5/2017	Poole et al.
9,646,614	B2	5/2017	Bellegarda et al.
9,648,564	B1	5/2017	Cui et al.
9,653,060	B1	5/2017	Hilmes et al.
9,653,075	B1	5/2017	Chen et al.
9,659,555	B1	5/2017	Hilmes et al.
9,672,812	B1	6/2017	Watanabe et al.
9,672,821	B2	6/2017	Krishnaswamy et al.
9,674,587	B2	6/2017	Triplett et al.
9,685,171	B1	6/2017	Yang
9,691,378	B1	6/2017	Meyers et al.
9,691,379	B1	6/2017	Mathias et al.
9,691,384	B1	6/2017	Wang et al.
9,697,826	B2	7/2017	Sainath et al.
9,697,828	B1	7/2017	Prasad et al.
9,698,999	B2	7/2017	Mutagi et al.
9,704,478	B1	7/2017	Vitaladevuni et al.
9,706,320	B2	7/2017	Starobin et al.
9,721,566	B2	8/2017	Newendorp et al.
9,721,568	B1	8/2017	Polansky et al.
9,721,570	B1	8/2017	Beal et al.
9,728,188	B1	8/2017	Rosen et al.
9,734,822	B1	8/2017	Sundaram et al.
9,736,578	B2	8/2017	Iyengar et al.
9,743,204	B1	8/2017	Welch et al.
9,743,207	B1	8/2017	Hartung
9,747,011	B2	8/2017	Lewis et al.
9,747,899	B2	8/2017	Pogue et al.
9,747,920	B2	8/2017	Ayrapetian et al.
9,747,926	B2	8/2017	Sharifi et al.
9,749,738	B1	8/2017	Adsumilli et al.
9,749,760	B2	8/2017	Lambourne
9,754,605	B1	9/2017	Chhetri
9,756,422	B2	9/2017	Paquier et al.
9,762,967	B2	9/2017	Clarke et al.
9,767,786	B2	9/2017	Starobin et al.
9,769,420	B1	9/2017	Moses
9,779,725	B2	10/2017	Sun et al.
9,779,732	B2	10/2017	Lee et al.
9,779,734	B2	10/2017	Lee
9,779,735	B2	10/2017	Civelli et al.
9,781,532	B2	10/2017	Sheen
9,799,330	B2	10/2017	Nemala et al.
9,805,733	B2	10/2017	Park
9,811,314	B2	11/2017	Plagge et al.
9,812,128	B2	11/2017	Mixter et al.
9,813,810	B1	11/2017	Nongpiur
9,813,812	B2	11/2017	Berthelsen et al.
9,818,407	B1	11/2017	Secker-Walker et al.
9,820,036	B1	11/2017	Tritschler et al.
9,820,039	B2	11/2017	Lang
9,826,306	B2	11/2017	Lang
9,865,259	B1	1/2018	Typrin et al.
9,865,264	B2	1/2018	Gelfenbeyn et al.
9,875,740	B1	1/2018	Kumar et al.
9,881,616	B2	1/2018	Beckley et al.
9,898,250	B1	2/2018	Williams et al.
9,899,021	B1	2/2018	Vitaladevuni et al.
9,900,723	B1	2/2018	Choisel et al.
9,916,839	B1	3/2018	Scalise et al.
9,947,316	B2	4/2018	Millington et al.
9,947,333	B1	4/2018	David
9,972,318	B1	5/2018	Kelly et al.
9,972,343	B1	5/2018	Thorson et al.
9,973,849	B1	5/2018	Zhang et al.
9,979,560	B2	5/2018	Kim et al.
9,992,642	B1	6/2018	Rapp et al.
10,013,381	B2	7/2018	Mayman et al.
10,013,995	B1	7/2018	Lashkari et al.
10,025,447	B1	7/2018	Dixit et al.
10,026,401	B1	7/2018	Mutagi et al.
10,028,069	B1	7/2018	Lang
10,038,419	B1	7/2018	Elliot et al.
10,048,930	B1	8/2018	Vega et al.
10,049,675	B2	8/2018	Haughay
10,051,366	B1	8/2018	Buoni et al.
10,051,600	B1	8/2018	Zhong et al.
10,057,698	B2	8/2018	Drinkwater et al.
RE47,049	E	9/2018	Zhu et al.
10,068,573	B1	9/2018	Aykac et al.
10,074,369	B2	9/2018	Devaraj et al.
10,074,371	B1	9/2018	Wang et al.
10,079,015	B1	9/2018	Lockhart et al.
10,089,981	B1	10/2018	Elangovan et al.
10,108,393	B2	10/2018	Millington et al.
10,115,400	B2	10/2018	Wilberding
10,116,748	B2	10/2018	Farmer et al.
10,127,911	B2	11/2018	Kim et al.
10,134,388	B1	11/2018	Lilly
10,134,398	B2	11/2018	Sharifi
10,134,399	B2	11/2018	Lang et al.
10,136,204	B1	11/2018	Poole et al.
10,152,969	B2	12/2018	Reilly et al.
10,157,042	B1	12/2018	Jayakumar et al.
10,181,323	B2	1/2019	Beckhardt et al.
10,186,265	B1	1/2019	Lockhart et al.
10,186,266	B1	1/2019	Devaraj et al.
10,186,276	B2	1/2019	Dewasurendra et al.
10,192,546	B1	1/2019	Piersol et al.
10,204,624	B1	2/2019	Knudson et al.
10,224,056	B1	3/2019	Torok et al.
10,225,651	B2	3/2019	Lang
10,229,680	B1	3/2019	Gillespie et al.
10,241,754	B1	3/2019	Kadarundalagi Raghuram Doss et al.
10,248,376	B2	4/2019	Keyser-Allen et al.
10,249,205	B2	4/2019	Hammersley et al.
10,276,161	B2	4/2019	Hughes et al.
10,297,256	B2	5/2019	Reilly et al.
10,304,440	B1	5/2019	Panchapagesan et al.
10,304,475	B1	5/2019	Wang et al.
10,318,236	B1	6/2019	Pal et al.
10,332,508	B1	6/2019	Hoffmeister

(56) **References Cited**

U.S. PATENT DOCUMENTS

10,339,917 B2 7/2019 Aleksic et al.
10,339,957 B1 7/2019 Chenier et al.
10,346,122 B1 7/2019 Morgan
10,354,650 B2 7/2019 Gruenstein et al.
10,354,658 B2 7/2019 Wilberding
10,360,915 B2 * 7/2019 Taple G10L 17/00
10,365,887 B1 7/2019 Mulherkar
10,365,889 B2 7/2019 Plagge et al.
10,366,688 B2 7/2019 Gunn et al.
10,366,699 B1 7/2019 Dharia et al.
10,374,816 B1 8/2019 Leblang et al.
10,381,001 B2 8/2019 Gunn et al.
10,381,002 B2 8/2019 Gunn et al.
10,381,003 B2 8/2019 Wakisaka et al.
10,388,272 B1 8/2019 Thomson et al.
10,424,296 B2 9/2019 Penilla et al.
10,433,058 B1 10/2019 Torgerson et al.
10,445,057 B2 10/2019 Vega et al.
10,445,365 B2 10/2019 Luke et al.
10,469,966 B2 11/2019 Lambourne
10,499,146 B2 12/2019 Lang et al.
10,510,340 B1 12/2019 Fu et al.
10,511,904 B2 12/2019 Buoni et al.
10,515,625 B1 12/2019 Metallinou et al.
10,522,146 B1 12/2019 Tushinskiy
10,546,583 B2 1/2020 White et al.
10,565,999 B2 1/2020 Wilberding
10,565,998 B2 2/2020 Wilberding
10,567,515 B1 * 2/2020 Bao G10L 17/22
10,573,312 B1 2/2020 Thomson et al.
10,573,321 B1 2/2020 Smith et al.
10,580,405 B1 3/2020 Wang et al.
10,586,534 B1 3/2020 Argyropoulos et al.
10,586,540 B1 3/2020 Smith et al.
10,593,328 B1 3/2020 Wang et al.
10,593,330 B2 3/2020 Sharifi
10,599,287 B2 3/2020 Kumar et al.
10,600,406 B1 3/2020 Shapiro et al.
10,602,268 B1 3/2020 Soto
10,614,807 B2 4/2020 Beckhardt et al.
10,621,981 B2 4/2020 Sereshki
10,622,009 B1 4/2020 Zhang et al.
10,623,811 B1 4/2020 Cwik
10,624,612 B2 4/2020 Sumi et al.
10,643,609 B1 5/2020 Pogue et al.
10,645,130 B2 5/2020 Corbin et al.
10,672,383 B1 6/2020 Thomson et al.
10,679,625 B1 6/2020 Lockhart et al.
10,681,460 B2 6/2020 Woo et al.
10,685,669 B1 6/2020 Lan et al.
10,694,608 B2 6/2020 Baker et al.
10,699,711 B2 6/2020 Reilly
10,706,843 B1 7/2020 Elangovan et al.
10,712,997 B2 7/2020 Wilberding et al.
10,720,173 B2 7/2020 Freeman et al.
10,728,196 B2 7/2020 Wang
10,735,870 B2 8/2020 Ballande et al.
10,740,065 B2 8/2020 Jarvis et al.
10,746,840 B1 8/2020 Barton et al.
10,748,531 B2 8/2020 Kim
10,762,896 B1 9/2020 Yavagal et al.
10,777,189 B1 9/2020 Fu et al.
10,777,203 B1 9/2020 Pasko
10,789,041 B2 9/2020 Kim et al.
10,797,667 B2 10/2020 Fish et al.
10,824,682 B2 11/2020 Alvares et al.
10,825,471 B2 11/2020 Walley et al.
10,837,667 B2 11/2020 Nelson et al.
10,847,137 B1 11/2020 Mandal et al.
10,847,143 B2 11/2020 Millington et al.
10,847,149 B1 11/2020 Mok et al.
10,847,164 B2 11/2020 Wilberding
10,848,885 B2 11/2020 Lambourne
RE48,371 E 12/2020 Zhu et al.
10,867,596 B2 12/2020 Yoneda et al.
10,867,604 B2 12/2020 Smith et al.
10,871,943 B1 12/2020 D'Amato et al.
10,878,811 B2 12/2020 Smith et al.
10,878,826 B2 12/2020 Li et al.
10,897,679 B2 1/2021 Lambourne
10,911,596 B1 2/2021 Do et al.
10,943,598 B2 3/2021 Singh et al.
10,964,314 B2 3/2021 Jazi et al.
10,971,158 B1 4/2021 Patangay et al.
11,024,311 B2 6/2021 Mixter et al.
11,025,569 B2 6/2021 Lind et al.
11,050,615 B2 6/2021 Mathews et al.
11,062,705 B2 7/2021 Watanabe et al.
11,100,923 B2 8/2021 Fainberg et al.
11,127,405 B1 9/2021 Antos et al.
11,137,979 B2 10/2021 Plagge
11,138,969 B2 10/2021 D'Amato
11,159,878 B1 10/2021 Chatlani et al.
11,172,328 B2 11/2021 Soto et al.
11,172,329 B2 11/2021 Soto et al.
11,175,880 B2 11/2021 Liu et al.
11,184,704 B2 11/2021 Jarvis et al.
11,184,969 B2 11/2021 Lang
11,206,052 B1 12/2021 Park et al.
11,212,612 B2 12/2021 Lang et al.
11,264,019 B2 3/2022 Bhattacharya et al.
11,277,512 B1 3/2022 Leeds et al.
11,315,556 B2 4/2022 Smith et al.
11,354,092 B2 6/2022 D'Amato et al.
11,361,763 B1 6/2022 Maas et al.
11,373,645 B1 6/2022 Mathew et al.
11,411,763 B2 8/2022 Mackay et al.
11,437,036 B2 * 9/2022 Zhang G10L 15/08
11,445,301 B2 9/2022 Park et al.
11,475,899 B2 10/2022 Lesso
11,514,898 B2 11/2022 Millington
11,531,520 B2 11/2022 Wilberding
2001/0003173 A1 6/2001 Lim
2001/0042107 A1 11/2001 Palm
2002/0022453 A1 2/2002 Balog et al.
2002/0026442 A1 2/2002 Lipscomb et al.
2002/0034280 A1 3/2002 Infosino
2002/0046023 A1 4/2002 Fujii et al.
2002/0054685 A1 5/2002 Avendano et al.
2002/0055950 A1 5/2002 Witteman
2002/0072816 A1 6/2002 Shdema et al.
2002/0116196 A1 8/2002 Tran
2002/0124097 A1 9/2002 Isely et al.
2002/0143532 A1 10/2002 McLean et al.
2003/0015354 A1 1/2003 Edwards et al.
2003/0038848 A1 2/2003 Lee et al.
2003/0040908 A1 2/2003 Yang et al.
2003/0070182 A1 4/2003 Pierre et al.
2003/0070869 A1 4/2003 Hlibowicki
2003/0072462 A1 4/2003 Hlibowicki
2003/0095672 A1 5/2003 Hobelsberger
2003/0097482 A1 5/2003 DeHart et al.
2003/0130850 A1 7/2003 Badt et al.
2003/0157951 A1 8/2003 Hasty, Jr.
2003/0235244 A1 12/2003 Pessoa et al.
2004/0024478 A1 2/2004 Hans et al.
2004/0093219 A1 5/2004 Shin et al.
2004/0105566 A1 6/2004 Matsunaga et al.
2004/0127241 A1 7/2004 Shostak
2004/0128135 A1 7/2004 Anastasakos et al.
2004/0153321 A1 8/2004 Chung et al.
2004/0161082 A1 8/2004 Brown et al.
2004/0234088 A1 11/2004 McCarty et al.
2005/0031131 A1 2/2005 Browning et al.
2005/0031132 A1 2/2005 Browning et al.
2005/0031133 A1 2/2005 Browning et al.
2005/0031134 A1 2/2005 Leske
2005/0031137 A1 2/2005 Browning et al.
2005/0031138 A1 2/2005 Browning et al.
2005/0031139 A1 2/2005 Browning et al.
2005/0031140 A1 2/2005 Browning
2005/0033582 A1 2/2005 Gadd et al.
2005/0047606 A1 3/2005 Lee et al.
2005/0077843 A1 4/2005 Benditt

(56) **References Cited**

U.S. PATENT DOCUMENTS

2005/0164664 A1 7/2005 DiFonzo et al.
2005/0195988 A1 9/2005 Tashev et al.
2005/0201254 A1 9/2005 Looney et al.
2005/0207584 A1 9/2005 Bright
2005/0235334 A1 10/2005 Togashi et al.
2005/0254662 A1 11/2005 Blank et al.
2005/0268234 A1 12/2005 Rossi et al.
2005/0283330 A1 12/2005 Laraia et al.
2005/0283475 A1 12/2005 Beranek et al.
2006/0004834 A1 1/2006 Pyhalammi et al.
2006/0023945 A1 2/2006 King et al.
2006/0041431 A1 2/2006 Maes
2006/0093128 A1 5/2006 Oxford
2006/0104451 A1 5/2006 Browning et al.
2006/0104454 A1 5/2006 Guitarte Perez et al.
2006/0147058 A1 7/2006 Wang
2006/0190269 A1 8/2006 Tessel et al.
2006/0190968 A1 8/2006 Jung et al.
2006/0247913 A1 11/2006 Huerta et al.
2006/0262943 A1 11/2006 Oxford
2007/0018844 A1 1/2007 Sutardja
2007/0019815 A1 1/2007 Asada et al.
2007/0033043 A1 2/2007 Hyakumoto
2007/0038461 A1 2/2007 Abbott et al.
2007/0038999 A1 2/2007 Millington
2007/0060054 A1 3/2007 Romesburg
2007/0071206 A1 3/2007 Gainsboro et al.
2007/0071255 A1 3/2007 Schobben
2007/0076131 A1 4/2007 Li et al.
2007/0076906 A1 4/2007 Takagi et al.
2007/0140058 A1 6/2007 McIntosh et al.
2007/0140521 A1 6/2007 Mitobe et al.
2007/0142944 A1 6/2007 Goldberg et al.
2007/0147651 A1 6/2007 Mitobe et al.
2007/0201639 A1 8/2007 Park et al.
2007/0254604 A1 11/2007 Kim
2007/0286426 A1 12/2007 Xiang et al.
2008/0008333 A1 1/2008 Nishikawa et al.
2008/0031466 A1 2/2008 Buck et al.
2008/0037814 A1 2/2008 Shau
2008/0090537 A1 4/2008 Sutardja
2008/0090617 A1 4/2008 Sutardja
2008/0144858 A1 6/2008 Khawand et al.
2008/0146289 A1 6/2008 Korneluk et al.
2008/0160977 A1 7/2008 Ahmaniemi et al.
2008/0182518 A1 7/2008 Lo
2008/0192946 A1 8/2008 Faller
2008/0207115 A1 8/2008 Lee et al.
2008/0208594 A1 8/2008 Cross et al.
2008/0221897 A1 9/2008 Cerra et al.
2008/0247530 A1 10/2008 Barton et al.
2008/0248797 A1 10/2008 Freeman et al.
2008/0291896 A1 11/2008 Tuubel et al.
2008/0291916 A1 11/2008 Xiong et al.
2008/0301729 A1 12/2008 Broos et al.
2009/0003620 A1 1/2009 McKillop et al.
2009/0005893 A1 1/2009 Sugii et al.
2009/0010445 A1 1/2009 Matsuo
2009/0013255 A1 1/2009 Yuschik et al.
2009/0018828 A1 1/2009 Nakadai et al.
2009/0043206 A1 2/2009 Towfiq et al.
2009/0046866 A1 2/2009 Feng et al.
2009/0052688 A1 2/2009 Ishibashi et al.
2009/0076821 A1 3/2009 Brenner et al.
2009/0113053 A1 4/2009 Van Wie et al.
2009/0153289 A1 6/2009 Hope et al.
2009/0191854 A1 7/2009 Beason
2009/0197524 A1 8/2009 Haff et al.
2009/0214048 A1 8/2009 Stokes, III et al.
2009/0220107 A1 9/2009 Every et al.
2009/0228919 A1 9/2009 Zott et al.
2009/0238377 A1 9/2009 Ramakrishnan et al.
2009/0238386 A1 9/2009 Usher et al.
2009/0248397 A1 10/2009 Garcia et al.
2009/0249222 A1 10/2009 Schmidt et al.
2009/0264072 A1 10/2009 Dai
2009/0299745 A1 12/2009 Kennewick et al.
2009/0323907 A1 12/2009 Gupta et al.
2009/0323924 A1 12/2009 Tashev et al.
2009/0326949 A1 12/2009 Douthitt et al.
2010/0014690 A1 1/2010 Wolff et al.
2010/0023638 A1 1/2010 Bowman
2010/0035593 A1 2/2010 Franco et al.
2010/0041443 A1 2/2010 Yokota
2010/0070276 A1 3/2010 Wasserblat et al.
2010/0070922 A1 3/2010 DeMaio et al.
2010/0075723 A1 3/2010 Min et al.
2010/0088100 A1 4/2010 Lindahl
2010/0092004 A1 4/2010 Kuze
2010/0161335 A1 6/2010 Whynot
2010/0172516 A1 7/2010 Lastrucci
2010/0178873 A1 7/2010 Lee et al.
2010/0179806 A1 7/2010 Zhang et al.
2010/0179874 A1 7/2010 Higgins et al.
2010/0185448 A1 7/2010 Meisel
2010/0211199 A1 8/2010 Naik et al.
2010/0260348 A1 10/2010 Bhow et al.
2010/0278351 A1 11/2010 Fozunbal et al.
2010/0299639 A1 11/2010 Ramsay et al.
2010/0329472 A1 12/2010 Nakadai et al.
2010/0332236 A1 12/2010 Tan
2011/0019833 A1 1/2011 Kuech et al.
2011/0033059 A1 2/2011 Bhaskar et al.
2011/0035580 A1 2/2011 Wang et al.
2011/0044461 A1 2/2011 Kuech et al.
2011/0044489 A1 2/2011 Saiki et al.
2011/0046952 A1 2/2011 Koshinaka
2011/0066634 A1 3/2011 Phillips et al.
2011/0091055 A1 4/2011 Leblanc
2011/0103615 A1 5/2011 Sun
2011/0131032 A1 6/2011 Yang et al.
2011/0145581 A1 6/2011 Malhotra et al.
2011/0170707 A1 7/2011 Yamada et al.
2011/0176687 A1 7/2011 Birkenes
2011/0182436 A1 7/2011 Murgia et al.
2011/0202924 A1 8/2011 Banguero et al.
2011/0218656 A1 9/2011 Bishop et al.
2011/0267985 A1 11/2011 Wilkinson et al.
2011/0276333 A1 11/2011 Wang et al.
2011/0280422 A1 11/2011 Neumeyer et al.
2011/0285808 A1 11/2011 Feng et al.
2011/0289506 A1 11/2011 Trivi et al.
2011/0299706 A1 12/2011 Sakai
2012/0009906 A1 1/2012 Patterson et al.
2012/0020485 A1 1/2012 Visser et al.
2012/0020486 A1 1/2012 Fried et al.
2012/0022863 A1 1/2012 Cho et al.
2012/0022864 A1 1/2012 Leman et al.
2012/0027218 A1 2/2012 Every et al.
2012/0076308 A1 3/2012 Kuech et al.
2012/0078635 A1 3/2012 Rothkopf et al.
2012/0086568 A1 4/2012 Scott et al.
2012/0123268 A1 5/2012 Tanaka et al.
2012/0128160 A1 5/2012 Kim et al.
2012/0131125 A1 5/2012 Seidel et al.
2012/0148075 A1 6/2012 Goh et al.
2012/0162540 A1 6/2012 Ouchi et al.
2012/0163603 A1 6/2012 Abe et al.
2012/0177215 A1 7/2012 Bose et al.
2012/0183149 A1 7/2012 Hiroe
2012/0224457 A1 9/2012 Kim et al.
2012/0224715 A1 9/2012 Kikkeri
2012/0237047 A1 9/2012 Neal et al.
2012/0245941 A1 9/2012 Cheyer
2012/0265528 A1 10/2012 Gruber et al.
2012/0288100 A1 11/2012 Cho
2012/0297284 A1 11/2012 Matthews, III et al.
2012/0308044 A1 12/2012 Vander Mey et al.
2012/0308046 A1 12/2012 Muza
2013/0006453 A1 1/2013 Wang et al.
2013/0024018 A1 1/2013 Chang et al.
2013/0034241 A1 2/2013 Pandey et al.
2013/0039527 A1 2/2013 Jensen et al.
2013/0051755 A1 2/2013 Brown et al.

(56) **References Cited**

U.S. PATENT DOCUMENTS

2013/0058492 A1 3/2013 Silzle et al.
2013/0066453 A1 3/2013 Seefeldt
2013/0073293 A1 3/2013 Jang et al.
2013/0080146 A1 3/2013 Kato et al.
2013/0080167 A1 3/2013 Mozer
2013/0080171 A1 3/2013 Mozer et al.
2013/0124211 A1 5/2013 McDonough
2013/0129100 A1 5/2013 Sorensen
2013/0148821 A1 6/2013 Sorensen
2013/0170647 A1 7/2013 Reilly et al.
2013/0179173 A1 7/2013 Lee et al.
2013/0183944 A1 7/2013 Mozer et al.
2013/0185639 A1 7/2013 Lim
2013/0191119 A1 7/2013 Sugiyama
2013/0191122 A1 7/2013 Mason
2013/0198298 A1 8/2013 Li et al.
2013/0211826 A1 8/2013 Mannby
2013/0216056 A1 8/2013 Thyssen
2013/0230184 A1 9/2013 Kuech et al.
2013/0238326 A1 9/2013 Kim et al.
2013/0262101 A1 10/2013 Srinivasan
2013/0283169 A1 10/2013 Van Wie
2013/0289994 A1 10/2013 Newman et al.
2013/0294611 A1 11/2013 Yoo et al.
2013/0301840 A1 11/2013 Yemdji et al.
2013/0315420 A1 11/2013 You
2013/0317635 A1 11/2013 Bates et al.
2013/0322462 A1 12/2013 Poulsen
2013/0322634 A1 12/2013 Bennett et al.
2013/0322665 A1 12/2013 Bennett et al.
2013/0324031 A1 12/2013 Loureiro
2013/0329896 A1 12/2013 Krishnaswamy et al.
2013/0331970 A1 12/2013 Beckhardt et al.
2013/0332165 A1 12/2013 Beckley et al.
2013/0336499 A1 12/2013 Beckhardt et al.
2013/0339028 A1 12/2013 Rosner et al.
2013/0343567 A1 12/2013 Triplett et al.
2014/0003611 A1 1/2014 Mohammad et al.
2014/0003625 A1 1/2014 Sheen et al.
2014/0003635 A1 1/2014 Mohammad et al.
2014/0005813 A1 1/2014 Reimann
2014/0006026 A1 1/2014 Lamb et al.
2014/0006825 A1 1/2014 Shenhav
2014/0019743 A1 1/2014 DeLuca
2014/0034929 A1 2/2014 Hamada et al.
2014/0046464 A1 2/2014 Reimann
2014/0056435 A1 2/2014 Kjems et al.
2014/0064476 A1 3/2014 Mani et al.
2014/0064501 A1 3/2014 Olsen et al.
2014/0073298 A1 3/2014 Rossmann
2014/0075306 A1 3/2014 Rega
2014/0075311 A1 3/2014 Boettcher et al.
2014/0094151 A1 4/2014 Klappert et al.
2014/0100854 A1 4/2014 Chen et al.
2014/0108010 A1 4/2014 Maltseff et al.
2014/0109138 A1 4/2014 Cannistraro et al.
2014/0122075 A1 5/2014 Bak et al.
2014/0126745 A1 5/2014 Dickins et al.
2014/0136195 A1 5/2014 Abdossalami et al.
2014/0145168 A1 5/2014 Ohsawa et al.
2014/0146983 A1 5/2014 Kim et al.
2014/0149118 A1 5/2014 Lee et al.
2014/0159581 A1 6/2014 Pruemmer et al.
2014/0161263 A1 6/2014 Koishida et al.
2014/0163978 A1 6/2014 Basye et al.
2014/0164400 A1 6/2014 Kruglick
2014/0167929 A1 6/2014 Shim et al.
2014/0167931 A1 6/2014 Lee et al.
2014/0168344 A1 6/2014 Shoemake et al.
2014/0172899 A1 6/2014 Hakkani-Tur et al.
2014/0172953 A1 6/2014 Blanksteen
2014/0181199 A1 6/2014 Kumar et al.
2014/0181271 A1 6/2014 Millington
2014/0188476 A1 7/2014 Li et al.
2014/0192986 A1 7/2014 Lee et al.
2014/0195252 A1 7/2014 Gruber et al.
2014/0200881 A1 7/2014 Chatlani
2014/0207457 A1 7/2014 Biatov et al.
2014/0210728 A1* 7/2014 Busse G06F 9/44505 345/173
2014/0214429 A1 7/2014 Pantel
2014/0215332 A1 7/2014 Lee et al.
2014/0219472 A1 8/2014 Huang et al.
2014/0222436 A1 8/2014 Binder et al.
2014/0229184 A1 8/2014 Shires
2014/0229959 A1 8/2014 Beckhardt et al.
2014/0244013 A1 8/2014 Reilly
2014/0244269 A1 8/2014 Tokutake
2014/0244712 A1 8/2014 Walters et al.
2014/0249817 A1 9/2014 Hart et al.
2014/0252386 A1 9/2014 Ito et al.
2014/0254805 A1 9/2014 Su et al.
2014/0258292 A1 9/2014 Thramann et al.
2014/0259075 A1 9/2014 Chang et al.
2014/0269757 A1 9/2014 Park et al.
2014/0270216 A1 9/2014 Tsilfidis et al.
2014/0270282 A1 9/2014 Tammi et al.
2014/0274185 A1 9/2014 Luna et al.
2014/0274203 A1 9/2014 Ganong, III et al.
2014/0274218 A1 9/2014 Kadiwala et al.
2014/0277650 A1 9/2014 Zurek et al.
2014/0278343 A1 9/2014 Tran
2014/0278372 A1 9/2014 Nakadai et al.
2014/0278445 A1 9/2014 Eddington, Jr.
2014/0278933 A1 9/2014 McMillan
2014/0288686 A1 9/2014 Sant et al.
2014/0291642 A1 10/2014 Watabe et al.
2014/0303969 A1 10/2014 Inose et al.
2014/0310002 A1 10/2014 Nitz et al.
2014/0310614 A1 10/2014 Jones
2014/0324203 A1 10/2014 Coburn, IV et al.
2014/0328490 A1 11/2014 Mohammad et al.
2014/0330896 A1 11/2014 Addala et al.
2014/0334645 A1 11/2014 Yun et al.
2014/0340888 A1 11/2014 Ishisone et al.
2014/0357248 A1 12/2014 Tonshal et al.
2014/0358535 A1 12/2014 Lee et al.
2014/0363022 A1 12/2014 Dizon et al.
2014/0363024 A1 12/2014 Apodaca
2014/0364089 A1 12/2014 Lienhart et al.
2014/0365225 A1 12/2014 Haiut
2014/0365227 A1 12/2014 Cash et al.
2014/0368734 A1 12/2014 Hoffert et al.
2014/0369491 A1 12/2014 Kloberdans et al.
2014/0372109 A1 12/2014 Iyer et al.
2015/0006176 A1 1/2015 Pogue et al.
2015/0006184 A1 1/2015 Marti et al.
2015/0010169 A1 1/2015 Popova et al.
2015/0014680 A1 1/2015 Yamazaki et al.
2015/0016642 A1 1/2015 Walsh et al.
2015/0018992 A1 1/2015 Griffiths et al.
2015/0019201 A1 1/2015 Schoenbach
2015/0019219 A1 1/2015 Tzirkel-Hancock et al.
2015/0030172 A1 1/2015 Gaensler et al.
2015/0032443 A1 1/2015 Karov et al.
2015/0032456 A1 1/2015 Wait
2015/0036831 A1 2/2015 Klippel
2015/0039303 A1 2/2015 Lesso et al.
2015/0039310 A1 2/2015 Clark et al.
2015/0039311 A1 2/2015 Clark et al.
2015/0039317 A1 2/2015 Klein et al.
2015/0058018 A1 2/2015 Georges et al.
2015/0063580 A1 3/2015 Huang et al.
2015/0066479 A1 3/2015 Pasupalak et al.
2015/0073807 A1 3/2015 Kumar
2015/0086034 A1 3/2015 Lombardi et al.
2015/0088500 A1 3/2015 Conliffe
2015/0091709 A1 4/2015 Reichert et al.
2015/0092947 A1 4/2015 Gossain et al.
2015/0104037 A1 4/2015 Lee et al.
2015/0106085 A1 4/2015 Lindahl
2015/0110294 A1 4/2015 Chen et al.
2015/0112672 A1 4/2015 Giacobello et al.
2015/0124975 A1 5/2015 Pontoppidan

(56) **References Cited**

U.S. PATENT DOCUMENTS

2015/0126255 A1 5/2015 Yang et al.
2015/0128065 A1 5/2015 Torii et al.
2015/0134456 A1 5/2015 Baldwin
2015/0154953 A1 6/2015 Bapat et al.
2015/0154976 A1 6/2015 Mutagi
2015/0161990 A1 6/2015 Sharifi
2015/0169279 A1 6/2015 Duga
2015/0170645 A1 6/2015 Di Censo et al.
2015/0170665 A1 6/2015 Gundeti et al.
2015/0172843 A1 6/2015 Quan
2015/0179181 A1 6/2015 Morris et al.
2015/0180432 A1 6/2015 Gao et al.
2015/0181318 A1 6/2015 Gautama et al.
2015/0189438 A1 7/2015 Hampiholi et al.
2015/0200454 A1 7/2015 Heusdens et al.
2015/0200923 A1 7/2015 Triplett
2015/0201271 A1 7/2015 Diethorn et al.
2015/0221307 A1 8/2015 Shah et al.
2015/0221678 A1 8/2015 Yamazaki et al.
2015/0222563 A1 8/2015 Burns et al.
2015/0222987 A1 8/2015 Angel, Jr. et al.
2015/0228274 A1 8/2015 Leppanen et al.
2015/0228803 A1 8/2015 Koezuka et al.
2015/0237406 A1 8/2015 Ochoa et al.
2015/0243287 A1 8/2015 Nakano et al.
2015/0245152 A1 8/2015 Ding et al.
2015/0245154 A1 8/2015 Dadu et al.
2015/0249889 A1 9/2015 Iyer et al.
2015/0253292 A1 9/2015 Larkin et al.
2015/0253960 A1 9/2015 Lin et al.
2015/0254057 A1 9/2015 Klein et al.
2015/0263174 A1 9/2015 Yamazaki et al.
2015/0271593 A1 9/2015 Sun et al.
2015/0277846 A1 10/2015 Yen et al.
2015/0280676 A1 10/2015 Holman et al.
2015/0296299 A1 10/2015 Klippel et al.
2015/0302856 A1 10/2015 Kim et al.
2015/0319529 A1 11/2015 Klippel
2015/0325267 A1 11/2015 Lee et al.
2015/0331663 A1 11/2015 Beckhardt et al.
2015/0334471 A1 11/2015 Innes et al.
2015/0338917 A1 11/2015 Steiner et al.
2015/0341406 A1 11/2015 Rockefeller et al.
2015/0346845 A1 12/2015 Di Censo et al.
2015/0348548 A1 12/2015 Piernot et al.
2015/0348551 A1 12/2015 Gruber et al.
2015/0355878 A1 12/2015 Corbin
2015/0363061 A1 12/2015 de Nigris, III et al.
2015/0363401 A1 12/2015 Chen et al.
2015/0370531 A1 12/2015 Faaborg
2015/0371657 A1 12/2015 Gao
2015/0371659 A1 12/2015 Gao
2015/0371664 A1 12/2015 Bar-Or et al.
2015/0373100 A1 12/2015 Kravets et al.
2015/0380010 A1 12/2015 Srinivasan
2015/0382047 A1 12/2015 Van Os et al.
2015/0382128 A1 12/2015 Ridihalgh et al.
2016/0007116 A1 1/2016 Holman
2016/0014536 A1 1/2016 Sheen
2016/0018873 A1 1/2016 Fernald et al.
2016/0021458 A1 1/2016 Johnson et al.
2016/0026428 A1 1/2016 Morganstern et al.
2016/0027440 A1 1/2016 Gelfenbeyn et al.
2016/0029142 A1 1/2016 Isaac et al.
2016/0034448 A1 2/2016 Tran
2016/0035321 A1 2/2016 Cho et al.
2016/0035337 A1 2/2016 Aggarwal et al.
2016/0036962 A1 2/2016 Rand et al.
2016/0042748 A1 2/2016 Jain et al.
2016/0044151 A1 2/2016 Shoemaker et al.
2016/0050488 A1 2/2016 Matheja et al.
2016/0055847 A1 2/2016 Dahan
2016/0055850 A1 2/2016 Nakadai et al.
2016/0057522 A1 2/2016 Choisel et al.
2016/0066087 A1 3/2016 Solbach et al.
2016/0070526 A1 3/2016 Sheen
2016/0072804 A1 3/2016 Chien et al.
2016/0077710 A1 3/2016 Lewis et al.
2016/0077794 A1 3/2016 Kim et al.
2016/0086609 A1 3/2016 Yue et al.
2016/0088036 A1 3/2016 Corbin et al.
2016/0088392 A1 3/2016 Huttunen et al.
2016/0093281 A1 3/2016 Kuo et al.
2016/0093304 A1 3/2016 Kim et al.
2016/0094718 A1 3/2016 Mani et al.
2016/0094917 A1 3/2016 Wilk et al.
2016/0098393 A1 4/2016 Hebert
2016/0098992 A1 4/2016 Renard et al.
2016/0103653 A1 4/2016 Jang
2016/0104480 A1 4/2016 Sharifi
2016/0111110 A1 4/2016 Gautama et al.
2016/0125876 A1 5/2016 Schroeter et al.
2016/0127780 A1 5/2016 Roberts et al.
2016/0133259 A1 5/2016 Rubin et al.
2016/0134924 A1 5/2016 Bush et al.
2016/0134966 A1 5/2016 Fitzgerald et al.
2016/0134982 A1 5/2016 Iyer
2016/0140957 A1 5/2016 Duta et al.
2016/0148612 A1 5/2016 Guo et al.
2016/0148615 A1 5/2016 Lee et al.
2016/0154089 A1 6/2016 Altman
2016/0155442 A1 6/2016 Kannan et al.
2016/0155443 A1 6/2016 Khan et al.
2016/0157035 A1 6/2016 Russell et al.
2016/0162469 A1 6/2016 Santos
2016/0171976 A1 6/2016 Sun et al.
2016/0173578 A1 6/2016 Sharma et al.
2016/0173983 A1 6/2016 Berthelsen et al.
2016/0180853 A1 6/2016 Vanlund et al.
2016/0189716 A1 6/2016 Lindahl et al.
2016/0192099 A1 6/2016 Oishi et al.
2016/0196499 A1 7/2016 Khan et al.
2016/0203331 A1 7/2016 Khan et al.
2016/0210110 A1 7/2016 Feldman
2016/0212488 A1 7/2016 Os et al.
2016/0212538 A1 7/2016 Fullam et al.
2016/0216938 A1 7/2016 Millington
2016/0217789 A1 7/2016 Lee et al.
2016/0225385 A1 8/2016 Hammarqvist
2016/0232451 A1 8/2016 Scherzer
2016/0234204 A1* 8/2016 Rishi G06F 21/31
2016/0234615 A1 8/2016 Lambourne
2016/0239255 A1 8/2016 Chavez et al.
2016/0240192 A1 8/2016 Raghuvir
2016/0241976 A1 8/2016 Pearson
2016/0253050 A1 9/2016 Mishra et al.
2016/0260431 A1 9/2016 Newendorp et al.
2016/0283841 A1 9/2016 Sainath et al.
2016/0299737 A1 10/2016 Clayton et al.
2016/0302018 A1 10/2016 Russell et al.
2016/0314782 A1 10/2016 Klimanis
2016/0316293 A1 10/2016 Klimanis
2016/0322045 A1 11/2016 Hatfield et al.
2016/0335485 A1 11/2016 Kim
2016/0336519 A1 11/2016 Seo et al.
2016/0343866 A1 11/2016 Koezuka et al.
2016/0343949 A1 11/2016 Seo et al.
2016/0343954 A1 11/2016 Seo et al.
2016/0345114 A1 11/2016 Hanna et al.
2016/0352915 A1 12/2016 Gautama
2016/0353217 A1 12/2016 Starobin et al.
2016/0353218 A1 12/2016 Starobin et al.
2016/0357503 A1 12/2016 Triplett et al.
2016/0364206 A1 12/2016 Keyser-Allen et al.
2016/0366515 A1 12/2016 Mendes et al.
2016/0372113 A1 12/2016 David et al.
2016/0372688 A1 12/2016 Seo et al.
2016/0373269 A1 12/2016 Okubo et al.
2016/0373909 A1 12/2016 Rasmussen et al.
2016/0379634 A1 12/2016 Yamamoto et al.
2016/0379635 A1 12/2016 Page
2017/0003931 A1 1/2017 Dvortsov et al.
2017/0012207 A1 1/2017 Seo et al.
2017/0012232 A1 1/2017 Kataishi et al.

(56) **References Cited**

U.S. PATENT DOCUMENTS

2017/0019732 A1 1/2017 Mendes et al.
2017/0025124 A1 1/2017 Mixter et al.
2017/0025615 A1 1/2017 Seo et al.
2017/0025630 A1 1/2017 Seo et al.
2017/0026769 A1 1/2017 Patel
2017/0032244 A1 2/2017 Kurata
2017/0034263 A1 2/2017 Archambault et al.
2017/0039025 A1 2/2017 Kielak
2017/0040002 A1 2/2017 Basson et al.
2017/0040018 A1 2/2017 Tormey
2017/0041724 A1 2/2017 Master et al.
2017/0053648 A1 2/2017 Chi
2017/0053650 A1 2/2017 Ogawa
2017/0060526 A1 3/2017 Barton et al.
2017/0062734 A1 3/2017 Suzuki et al.
2017/0070478 A1 3/2017 Park et al.
2017/0076212 A1 3/2017 Shams et al.
2017/0076720 A1 3/2017 Gopalan et al.
2017/0076726 A1 3/2017 Bae
2017/0078824 A1 3/2017 Heo
2017/0083285 A1 3/2017 Meyers et al.
2017/0083606 A1 3/2017 Mohan
2017/0084277 A1 3/2017 Sharifi
2017/0084278 A1 3/2017 Jung
2017/0084292 A1 3/2017 Yoo
2017/0084295 A1 3/2017 Tsiartas et al.
2017/0090864 A1 3/2017 Jorgovanovic
2017/0092278 A1 3/2017 Evermann et al.
2017/0092297 A1 3/2017 Sainath et al.
2017/0092299 A1 3/2017 Matsuo
2017/0092889 A1 3/2017 Seo et al.
2017/0092890 A1 3/2017 Seo et al.
2017/0094215 A1 3/2017 Western
2017/0103748 A1 4/2017 Weissberg et al.
2017/0103754 A1 4/2017 Higbie et al.
2017/0103755 A1 4/2017 Jeon et al.
2017/0110124 A1 4/2017 Boesen et al.
2017/0110130 A1 4/2017 Sharifi et al.
2017/0110144 A1 4/2017 Sharifi et al.
2017/0117497 A1 4/2017 Seo et al.
2017/0123251 A1 5/2017 Nakada et al.
2017/0125037 A1 5/2017 Shin
2017/0125456 A1 5/2017 Kasahara
2017/0133007 A1 5/2017 Drewes
2017/0133011 A1 5/2017 Chen et al.
2017/0134872 A1 5/2017 Silva et al.
2017/0139720 A1 5/2017 Stein
2017/0140449 A1 5/2017 Kannan
2017/0140748 A1 5/2017 Roberts et al.
2017/0140750 A1 5/2017 Wang et al.
2017/0140757 A1 5/2017 Penilla et al.
2017/0140759 A1 5/2017 Kumar et al.
2017/0151930 A1 6/2017 Boesen
2017/0164139 A1 6/2017 Deselaers et al.
2017/0177585 A1 6/2017 Rodger et al.
2017/0178662 A1 6/2017 Ayrapetian et al.
2017/0180561 A1 6/2017 Kadiwala et al.
2017/0186425 A1 6/2017 Dawes et al.
2017/0186427 A1 6/2017 Wang et al.
2017/0188150 A1 6/2017 Brunet et al.
2017/0188437 A1 6/2017 Banta
2017/0193999 A1 7/2017 Aleksic et al.
2017/0206896 A1 7/2017 Ko et al.
2017/0206900 A1 7/2017 Lee et al.
2017/0214996 A1 7/2017 Yeo
2017/0236512 A1 8/2017 Williams et al.
2017/0236515 A1 8/2017 Pinsky et al.
2017/0242649 A1 8/2017 Jarvis et al.
2017/0242651 A1 8/2017 Lang et al.
2017/0242653 A1 8/2017 Lang et al.
2017/0242656 A1 8/2017 Plagge et al.
2017/0242657 A1 8/2017 Jarvis et al.
2017/0243576 A1 8/2017 Millington et al.
2017/0243587 A1 8/2017 Plagge et al.
2017/0245076 A1 8/2017 Kusano et al.
2017/0255612 A1 9/2017 Sarikaya et al.
2017/0257686 A1 9/2017 Gautama et al.
2017/0269900 A1 9/2017 Triplett
2017/0269975 A1 9/2017 Wood et al.
2017/0270919 A1 9/2017 Parthasarathi et al.
2017/0278512 A1 9/2017 Pandya et al.
2017/0287485 A1 10/2017 Civelli et al.
2017/0300289 A1 10/2017 Gattis
2017/0300990 A1 10/2017 Tanaka et al.
2017/0329397 A1 11/2017 Lin
2017/0330565 A1 11/2017 Daley et al.
2017/0331869 A1 11/2017 Bendahan et al.
2017/0332168 A1 11/2017 Moghimi et al.
2017/0346872 A1 11/2017 Naik et al.
2017/0352357 A1 12/2017 Fink
2017/0353789 A1 12/2017 Kim et al.
2017/0357390 A1 12/2017 Alonso Ruiz et al.
2017/0357475 A1 12/2017 Lee et al.
2017/0357478 A1 12/2017 Piersol et al.
2017/0364371 A1 12/2017 Nandi et al.
2017/0365247 A1 12/2017 Ushakov
2017/0366393 A1 12/2017 Shaker et al.
2017/0374454 A1 12/2017 Bernardini et al.
2017/0374552 A1 12/2017 Xia et al.
2018/0012077 A1 1/2018 Laska et al.
2018/0018964 A1 1/2018 Reilly et al.
2018/0018965 A1 1/2018 Daley
2018/0018967 A1 1/2018 Lang et al.
2018/0020306 A1 1/2018 Sheen
2018/0025733 A1 1/2018 Qian et al.
2018/0033428 A1 2/2018 Kim et al.
2018/0033429 A1 2/2018 Makke et al.
2018/0033438 A1 2/2018 Toma et al.
2018/0040324 A1 2/2018 Wilberding
2018/0047394 A1 2/2018 Tian et al.
2018/0053504 A1 2/2018 Wang et al.
2018/0054506 A1 2/2018 Hart et al.
2018/0061396 A1 3/2018 Srinivasan et al.
2018/0061402 A1 3/2018 Devaraj et al.
2018/0061404 A1 3/2018 Devaraj et al.
2018/0061409 A1 3/2018 Valentine et al.
2018/0061419 A1 3/2018 Melendo Casado et al.
2018/0061420 A1 3/2018 Patil et al.
2018/0062871 A1 3/2018 Jones et al.
2018/0084367 A1 3/2018 Greff et al.
2018/0088900 A1 3/2018 Glaser et al.
2018/0091898 A1 3/2018 Yoon et al.
2018/0091913 A1 3/2018 Hartung et al.
2018/0096678 A1 4/2018 Zhou et al.
2018/0096683 A1 4/2018 James et al.
2018/0096696 A1 4/2018 Mixter
2018/0107446 A1 4/2018 Wilberding et al.
2018/0108351 A1 4/2018 Beckhardt et al.
2018/0120947 A1 5/2018 Wells et al.
2018/0122372 A1 5/2018 Wanderlust
2018/0122378 A1 5/2018 Mixter et al.
2018/0130469 A1 5/2018 Gruenstein et al.
2018/0132217 A1 5/2018 Stirling-Gallacher
2018/0132298 A1 5/2018 Birnam et al.
2018/0137857 A1 5/2018 Zhou et al.
2018/0137861 A1 5/2018 Ogawa
2018/0139512 A1 5/2018 Moran et al.
2018/0152557 A1 5/2018 White et al.
2018/0158454 A1 6/2018 Campbell et al.
2018/0165055 A1 6/2018 Yu et al.
2018/0167981 A1 6/2018 Jonna et al.
2018/0174597 A1 6/2018 Lee et al.
2018/0182383 A1 6/2018 Kim et al.
2018/0182390 A1 6/2018 Hughes et al.
2018/0182397 A1 6/2018 Carbune et al.
2018/0182410 A1 6/2018 Kaskari et al.
2018/0188948 A1 7/2018 Ouyang et al.
2018/0190274 A1 7/2018 Kirazci et al.
2018/0190285 A1 7/2018 Heckmann et al.
2018/0196776 A1 7/2018 Hershko et al.
2018/0197533 A1 7/2018 Lyon et al.
2018/0199130 A1 7/2018 Jaffe et al.
2018/0199146 A1 7/2018 Sheen
2018/0204569 A1 7/2018 Nadkar et al.

(56) **References Cited**

U.S. PATENT DOCUMENTS

2018/0205963 A1 7/2018 Matei et al.
2018/0210698 A1 7/2018 Park et al.
2018/0211665 A1 7/2018 Park et al.
2018/0218747 A1 8/2018 Moghimi et al.
2018/0219976 A1 8/2018 Decenzo et al.
2018/0225933 A1 8/2018 Park et al.
2018/0228006 A1 8/2018 Baker et al.
2018/0233130 A1 8/2018 Kaskari et al.
2018/0233136 A1 8/2018 Torok et al.
2018/0233137 A1 8/2018 Torok et al.
2018/0233139 A1 8/2018 Finkelstein et al.
2018/0233141 A1 8/2018 Solomon et al.
2018/0233142 A1 8/2018 Koishida et al.
2018/0233150 A1 8/2018 Gruenstein et al.
2018/0234765 A1 8/2018 Torok et al.
2018/0260680 A1 9/2018 Finkelstein et al.
2018/0261213 A1 9/2018 Arik et al.
2018/0262793 A1 9/2018 Lau et al.
2018/0262831 A1 9/2018 Matheja et al.
2018/0270565 A1 9/2018 Ganeshkumar
2018/0270573 A1 9/2018 Lang et al.
2018/0270575 A1 9/2018 Akutagawa
2018/0277107 A1 9/2018 Kim
2018/0277113 A1 9/2018 Hartung et al.
2018/0277119 A1 9/2018 Baba et al.
2018/0277133 A1 9/2018 Deetz et al.
2018/0286394 A1 10/2018 Li et al.
2018/0286414 A1 10/2018 Ravindran et al.
2018/0293221 A1 10/2018 Finkelstein et al.
2018/0293484 A1 10/2018 Wang et al.
2018/0301147 A1 10/2018 Kim
2018/0308470 A1 10/2018 Park et al.
2018/0314552 A1 11/2018 Kim et al.
2018/0315429 A1* 11/2018 Taple G10L 15/26
2018/0322891 A1 11/2018 Van Den Oord et al.
2018/0324756 A1 11/2018 Ryu et al.
2018/0330727 A1 11/2018 Tulli
2018/0335903 A1 11/2018 Coffman et al.
2018/0336274 A1 11/2018 Choudhury et al.
2018/0336892 A1 11/2018 Kim et al.
2018/0349093 A1 12/2018 McCarty et al.
2018/0350356 A1 12/2018 Garcia
2018/0350379 A1 12/2018 Wung et al.
2018/0352014 A1 12/2018 Alsina et al.
2018/0352334 A1 12/2018 Family et al.
2018/0356962 A1 12/2018 Corbin
2018/0358009 A1 12/2018 Daley et al.
2018/0358019 A1 12/2018 Mont-Reynaud
2018/0365567 A1 12/2018 Kolavennu et al.
2018/0367944 A1 12/2018 Heo et al.
2019/0012141 A1 1/2019 Piersol et al.
2019/0013019 A1 1/2019 Lawrence
2019/0014592 A1 1/2019 Hampel et al.
2019/0019112 A1 1/2019 Gelfenbeyn et al.
2019/0033446 A1 1/2019 Bultan et al.
2019/0035404 A1 1/2019 Gabel et al.
2019/0037173 A1 1/2019 Lee
2019/0042187 A1 2/2019 Truong et al.
2019/0043488 A1 2/2019 Bocklet et al.
2019/0043492 A1 2/2019 Lang
2019/0044745 A1 2/2019 Knudson et al.
2019/0051298 A1 2/2019 Lee et al.
2019/0051299 A1 2/2019 Ossowski et al.
2019/0066672 A1 2/2019 Wood et al.
2019/0066680 A1 2/2019 Woo et al.
2019/0066687 A1 2/2019 Wood et al.
2019/0066710 A1 2/2019 Bryan et al.
2019/0073999 A1 3/2019 Prémont et al.
2019/0074025 A1 3/2019 Lashkari et al.
2019/0079724 A1 3/2019 Feuz et al.
2019/0081507 A1 3/2019 Ide
2019/0081810 A1 3/2019 Jung
2019/0082255 A1 3/2019 Tajiri et al.
2019/0087455 A1 3/2019 He et al.
2019/0088261 A1 3/2019 Lang et al.
2019/0090056 A1 3/2019 Rexach et al.
2019/0096408 A1 3/2019 Li et al.
2019/0098400 A1 3/2019 Buoni et al.
2019/0104119 A1 4/2019 Giorgi et al.
2019/0104373 A1 4/2019 Wodrich et al.
2019/0108839 A1 4/2019 Reilly et al.
2019/0115011 A1 4/2019 Khellah et al.
2019/0122662 A1 4/2019 Chang et al.
2019/0130906 A1 5/2019 Kobayashi et al.
2019/0156847 A1 5/2019 Bryan et al.
2019/0163153 A1 5/2019 Price et al.
2019/0172452 A1 6/2019 Smith et al.
2019/0172467 A1 6/2019 Kim et al.
2019/0172476 A1 6/2019 Wung et al.
2019/0173687 A1 6/2019 Mackay et al.
2019/0179607 A1 6/2019 Thangarathnam et al.
2019/0179611 A1 6/2019 Wojogbe et al.
2019/0182072 A1 6/2019 Roe et al.
2019/0186937 A1 6/2019 Sharifi et al.
2019/0188328 A1 6/2019 Oyenan et al.
2019/0189117 A1 6/2019 Kumar
2019/0206391 A1 7/2019 Busch et al.
2019/0206405 A1 7/2019 Gillespie et al.
2019/0206412 A1 7/2019 Li et al.
2019/0219976 A1 7/2019 Giorgi et al.
2019/0220246 A1 7/2019 Orr et al.
2019/0221206 A1 7/2019 Chen et al.
2019/0237067 A1 8/2019 Friedman et al.
2019/0237089 A1 8/2019 Shin
2019/0239008 A1 8/2019 Lambourne
2019/0239009 A1 8/2019 Lambourne
2019/0243603 A1 8/2019 Keyser-Allen et al.
2019/0243606 A1 8/2019 Jayakumar et al.
2019/0244608 A1 8/2019 Choi et al.
2019/0251960 A1 8/2019 Maker et al.
2019/0259408 A1 8/2019 Freeman et al.
2019/0281387 A1 9/2019 Woo et al.
2019/0281397 A1 9/2019 Lambourne
2019/0287536 A1 9/2019 Sharifi et al.
2019/0287546 A1 9/2019 Ganeshkumar
2019/0288970 A1 9/2019 Siddiq
2019/0289367 A1 9/2019 Siddiq
2019/0295542 A1 9/2019 Huang et al.
2019/0295555 A1 9/2019 Wilberding
2019/0295556 A1 9/2019 Wilberding
2019/0295563 A1 9/2019 Kamdar et al.
2019/0297388 A1 9/2019 Panchaksharaiah et al.
2019/0304443 A1 10/2019 Bhagwan
2019/0311710 A1 10/2019 Eraslan et al.
2019/0311712 A1 10/2019 Firik et al.
2019/0311715 A1 10/2019 Pfeffinger et al.
2019/0311718 A1 10/2019 Huber et al.
2019/0311720 A1 10/2019 Pasko
2019/0311722 A1 10/2019 Caldwell
2019/0317606 A1 10/2019 Jain et al.
2019/0318729 A1 10/2019 Chao et al.
2019/0325870 A1 10/2019 Mitic
2019/0325888 A1 10/2019 Geng
2019/0341037 A1 11/2019 Bromand et al.
2019/0341038 A1 11/2019 Bromand et al.
2019/0342962 A1 11/2019 Chang et al.
2019/0347063 A1 11/2019 Liu et al.
2019/0348044 A1 11/2019 Chun et al.
2019/0362714 A1 11/2019 Mori et al.
2019/0364375 A1 11/2019 Soto et al.
2019/0364422 A1 11/2019 Zhuo
2019/0371310 A1 12/2019 Fox et al.
2019/0371324 A1 12/2019 Powell et al.
2019/0371327 A1* 12/2019 Quinn G10L 15/16
2019/0371329 A1* 12/2019 D'Souza G10L 15/22
2019/0371342 A1 12/2019 Tukka et al.
2019/0392832 A1 12/2019 Mitsui et al.
2019/0392837 A1* 12/2019 Jung G10L 15/22
2020/0007987 A1 1/2020 Woo et al.
2020/0034492 A1 1/2020 Verbeke et al.
2020/0043489 A1 2/2020 Bradley et al.
2020/0051554 A1 2/2020 Kim et al.
2020/0066279 A1 2/2020 Kang et al.
2020/0074990 A1 3/2020 Kim et al.

(56) **References Cited**

U.S. PATENT DOCUMENTS

2020/0075018	A1	3/2020	Chen	
2020/0090643	A1*	3/2020	Shin	G10L 15/063
2020/0090647	A1	3/2020	Kurtz	
2020/0092687	A1	3/2020	Devaraj et al.	
2020/0098354	A1	3/2020	Lin et al.	
2020/0098379	A1	3/2020	Tai et al.	
2020/0105245	A1	4/2020	Gupta et al.	
2020/0105256	A1	4/2020	Fainberg et al.	
2020/0105264	A1	4/2020	Jang et al.	
2020/0110571	A1	4/2020	Liu et al.	
2020/0125162	A1	4/2020	D'Amato et al.	
2020/0135194	A1	4/2020	Jeong	
2020/0135224	A1	4/2020	Bromand et al.	
2020/0152206	A1	5/2020	Shen et al.	
2020/0175989	A1	6/2020	Lockhart et al.	
2020/0184964	A1	6/2020	Myers et al.	
2020/0184980	A1	6/2020	Wilberding	
2020/0193973	A1	6/2020	Tolomei et al.	
2020/0211539	A1	7/2020	Lee	
2020/0211550	A1	7/2020	Pan et al.	
2020/0211556	A1	7/2020	Mixter et al.	
2020/0213729	A1	7/2020	Soto	
2020/0216089	A1	7/2020	Garcia et al.	
2020/0234709	A1	7/2020	Kunitake	
2020/0244650	A1	7/2020	Burris et al.	
2020/0251107	A1	8/2020	Wang et al.	
2020/0265838	A1	8/2020	Lee et al.	
2020/0310751	A1	10/2020	Anand et al.	
2020/0336846	A1	10/2020	Rohde et al.	
2020/0342869	A1	10/2020	Lee et al.	
2020/0366477	A1	11/2020	Brown et al.	
2020/0395006	A1	12/2020	Smith et al.	
2020/0395010	A1	12/2020	Smith et al.	
2020/0395013	A1	12/2020	Smith et al.	
2020/0409652	A1	12/2020	Wilberding et al.	
2020/0409926	A1	12/2020	Srinivasan et al.	
2021/0035561	A1	2/2021	D'Amato et al.	
2021/0035572	A1	2/2021	D'Amato et al.	
2021/0067867	A1	3/2021	Kagoshima	
2021/0118429	A1	4/2021	Shan	
2021/0118439	A1	4/2021	Schillmoeller et al.	
2021/0166680	A1	6/2021	Jung et al.	
2021/0183366	A1	6/2021	Reinspach et al.	
2021/0280185	A1	9/2021	Tan et al.	
2021/0295849	A1	9/2021	Van Der Ven et al.	
2021/0358481	A1	11/2021	D'Amato et al.	
2022/0020388	A1*	1/2022	Trim	H04M 3/568
2022/0036882	A1	2/2022	Ahn et al.	
2022/0050585	A1	2/2022	Fettes et al.	
2022/0083136	A1	3/2022	DeLeeuw	
2022/0301561	A1	9/2022	Robert Jose et al.	
2023/0237997	A1*	7/2023	Ramic	G10L 15/22 704/275

FOREIGN PATENT DOCUMENTS

CN	1323435	A	11/2001
CN	1748250	A	3/2006
CN	1781291	A	5/2006
CN	101310558	A	11/2008
CN	101427154	A	5/2009
CN	101480039	A	7/2009
CN	101661753	A	3/2010
CN	101686282	A	3/2010
CN	101907983	A	12/2010
CN	102123188	A	7/2011
CN	102256098	A	11/2011
CN	102567468	A	7/2012
CN	102999161	A	3/2013
CN	103052001	A	4/2013
CN	103181192	A	6/2013
CN	103210663	A	7/2013
CN	103546616	A	1/2014
CN	103811007	A	5/2014
CN	104010251	A	8/2014
CN	104035743	A	9/2014
CN	104053088	A	9/2014
CN	104092936	A	10/2014
CN	104104769	A	10/2014
CN	104115224	A	10/2014
CN	104155938	A	11/2014
CN	104282305	A	1/2015
CN	104520927	A	4/2015
CN	104538030	A	4/2015
CN	104572009	A	4/2015
CN	104575504	A	4/2015
CN	104581510	A	4/2015
CN	104635539	A	5/2015
CN	104865550	A	8/2015
CN	104885406	A	9/2015
CN	104885438	A	9/2015
CN	105101083	A	11/2015
CN	105162886	A	12/2015
CN	105187907	A	12/2015
CN	105204357	A	12/2015
CN	105206281	A	12/2015
CN	105284076	A	1/2016
CN	105284168	A	1/2016
CN	105389099	A	3/2016
CN	105427861	A	3/2016
CN	105453179	A	3/2016
CN	105472191	A	4/2016
CN	105493179	A	4/2016
CN	105493442	A	4/2016
CN	105632486	A	6/2016
CN	105679318	A	6/2016
CN	106028223	A	10/2016
CN	106030699	A	10/2016
CN	106375902	A	2/2017
CN	106531165	A	3/2017
CN	106708403	A	5/2017
CN	106796784	A	5/2017
CN	106910500	A	6/2017
CN	107004410	A	8/2017
CN	107122158	A	9/2017
CN	107465974	A	12/2017
CN	107644313	A	1/2018
CN	107767863	A	3/2018
CN	107832837	A	3/2018
CN	107919116	A	4/2018
CN	107919123	A	4/2018
CN	108028047	A	5/2018
CN	108028048	A	5/2018
CN	108198548	A	6/2018
CN	109712626	A	5/2019
EP	1349146	A1	10/2003
EP	1389853	A1	2/2004
EP	2051542	A1	4/2009
EP	2166737	A1	3/2010
EP	2683147	A1	1/2014
EP	2986034	A1	2/2016
EP	3128767	A2	2/2017
EP	3133595	A1	2/2017
EP	2351021	B1	9/2017
EP	3270377	A1	1/2018
EP	3285502	A1	2/2018
GB	2501367	A	10/2013
JP	S63301998	A	12/1988
JP	H0883091	A	3/1996
JP	2001236093	A	8/2001
JP	2003223188	A	8/2003
JP	2004096520	A	3/2004
JP	2004109361	A	4/2004
JP	2004163590	A	6/2004
JP	2004347943	A	12/2004
JP	2004354721	A	12/2004
JP	2005242134	A	9/2005
JP	2005250867	A	9/2005
JP	2005284492	A	10/2005
JP	2006092482	A	4/2006
JP	2007013400	A	1/2007
JP	2007142595	A	6/2007
JP	2007235875	A	9/2007

(56) **References Cited**

FOREIGN PATENT DOCUMENTS

JP	2008079256	A	4/2008
JP	2008158868	A	7/2008
JP	2008217444	A	9/2008
JP	2010141748	A	6/2010
JP	2013037148	A	2/2013
JP	2014071138	A	4/2014
JP	2014510481	A	4/2014
JP	2014137590	A	7/2014
JP	2015161551	A	9/2015
JP	2015527768	A	9/2015
JP	2016009193	A	1/2016
JP	2016095383	A	5/2016
JP	2017072857	A	4/2017
JP	2017129860	A	7/2017
JP	2017227912	A	12/2017
JP	2018055259	A	4/2018
JP	2019109510	A	7/2019
KR	20100036351	A	4/2010
KR	100966415	B1	6/2010
KR	20100111071	A	10/2010
KR	20130050987	A	5/2013
KR	101284134	B1	7/2013
KR	20140005410	A	1/2014
KR	20140035310	A	3/2014
KR	20140054643	A	5/2014
KR	20140111859	A	9/2014
KR	20140112900	A	9/2014
TW	201629950	A	8/2016
WO	200153994		7/2001
WO	03054854	A2	7/2003
WO	2003093950	A2	11/2003
WO	2008048599	A1	4/2008
WO	2008096414	A1	8/2008
WO	2012166386	A2	12/2012
WO	2013184792	A1	12/2013
WO	2014064531	A1	5/2014
WO	2014159581	A1	10/2014
WO	2015017303	A1	2/2015
WO	2015037396	A1	3/2015
WO	2015105788	A1	7/2015
WO	2015131024	A1	9/2015
WO	2015133022	A1	9/2015
WO	2015178950	A1	11/2015
WO	2015195216	A1	12/2015
WO	2016003509	A1	1/2016
WO	2016014142	A1	1/2016
WO	2016014686	A1	1/2016
WO	2016022926	A1	2/2016
WO	2016033364	A1	3/2016
WO	2016057268	A1	4/2016
WO	2016085775	A2	6/2016
WO	2016136062	A1	9/2016
WO	2016165067	A1	10/2016
WO	2016171956	A1	10/2016
WO	2016200593	A1	12/2016
WO	2017039632	A1	3/2017
WO	2017058654	A1	4/2017
WO	2017138934	A1	8/2017
WO	2017147075	A1	8/2017
WO	2017147936	A1	9/2017
WO	2018027142	A1	2/2018
WO	2018067404	A1	4/2018
WO	2018140777	A1	8/2018
WO	2019005772	A1	1/2019

OTHER PUBLICATIONS

Notice of Allowance mailed on Sep. 21, 2022, issued in connection with U.S. Appl. No. 17/128,949, filed Dec. 21, 2020, 8 pages.
Notice of Allowance mailed on Nov. 22, 2021, issued in connection with U.S. Appl. No. 16/834,483, filed Mar. 30, 2020, 10 pages.
Notice of Allowance mailed on Sep. 22, 2022, issued in connection with U.S. Appl. No. 17/163,506, filed Jan. 31, 2021, 13 pages.
Notice of Allowance mailed on Sep. 22, 2022, issued in connection with U.S. Appl. No. 17/248,427, filed Jan. 25, 2021, 9 pages.
Notice of Allowance mailed on Feb. 23, 2023, issued in connection with U.S. Appl. No. 17/532,674, filed Nov. 22, 2021, 10 pages.
Notice of Allowance mailed on Mar. 24, 2022, issued in connection with U.S. Appl. No. 16/378,516, filed Apr. 8, 2019, 7 pages.
Notice of Allowance mailed on Aug. 26, 2022, issued in connection with U.S. Appl. No. 17/145,667, filed Jan. 11, 2021, 8 pages.
Notice of Allowance mailed on Oct. 26, 2022, issued in connection with U.S. Appl. No. 17/486,574, filed Sep. 27, 2021, 11 pages.
Notice of Allowance mailed on Jun. 27, 2022, issued in connection with U.S. Appl. No. 16/812,758, filed Mar. 9, 2020, 16 pages.
Notice of Allowance mailed on Sep. 28, 2022, issued in connection with U.S. Appl. No. 17/444,043, filed Jul. 29, 2021, 17 pages.
Notice of Allowance mailed on Dec. 29, 2022, issued in connection with U.S. Appl. No. 17/327,911, filed May 24, 2021, 14 pages.
Notice of Allowance mailed on Jul. 29, 2022, issued in connection with U.S. Appl. No. 17/236,559, filed Apr. 21, 2021, 6 pages.
Notice of Allowance mailed on Mar. 29, 2023, issued in connection with U.S. Appl. No. 17/722,438, filed Apr. 18, 2022, 7 pages.
Notice of Allowance mailed on Mar. 3, 2022, issued in connection with U.S. Appl. No. 16/679,538, filed Nov. 11, 2019, 7 pages.
Notice of Allowance mailed on Mar. 30, 2023, issued in connection with U.S. Appl. No. 17/303,066, filed May 19, 2021, 7 pages.
Notice of Allowance mailed on Mar. 31, 2023, issued in connection with U.S. Appl. No. 17/303,735, filed Jun. 7, 2021, 19 pages.
Notice of Allowance mailed on Apr. 5, 2023, issued in connection with U.S. Appl. No. 17/549,253, filed Dec. 13, 2021, 10 pages.
Notice of Allowance mailed on Mar. 6, 2023, issued in connection with U.S. Appl. No. 17/449,926, filed Oct. 4, 2021, 8 pages.
Notice of Allowance mailed on Apr. 8, 2022, issued in connection with U.S. Appl. No. 16/813,643, filed Mar. 9, 2020, 7 pages.
Notice of Allowance mailed on Nov. 8, 2021, issued in connection with U.S. Appl. No. 17/008,104, filed Aug. 31, 2020, 9 pages.
Notice of Allowance mailed on Dec. 9, 2021, issued in connection with U.S. Appl. No. 16/845,946, filed Apr. 10, 2020, 10 pages.
Notice of Allowance mailed on Feb. 9, 2022, issued in connection with U.S. Appl. No. 17/247,736, filed Dec. 21, 2020, 8 pages.
Pre-Appeal Brief Decision mailed on Jan. 18, 2022, issued in connection with U.S. Appl. No. 16/806,747, filed Mar. 2, 2020, 2 pages.
Simon Doclo et al. Combined Acoustic Echo and Noise Reduction Using GSVD-Based Optimal Filtering. In 2000 IEEE International Conference on Acoustics, Speech, and Signal Processing. Proceedings (Cat. No. 00CH37100), Aug. 6, 2002, 4 pages. [retrieved on Feb. 23, 2023], Retrieved from the Internet: URL: https://scholar.google.com/scholar?hl=en&as_sdt=0%2C14&q=COMBINED+ACOUSTIC+ECHO+AND+NOISE+REDUCTION+USING+GSVD-BASED+OPTIMAL+FILTERING&btnG=.
Tsung-Hsien Wen et al: "A Network-based End-to-End Trainable Task-oriented Dialogue System", Corr (ARXIV), vol. 1604.04562v1, Apr. 15, 2016 (Apr. 15, 2016), pp. 1-11.
Wikipedia. "The Wayback Machine", Speech recognition software for Linux, Sep. 22, 2016, 4 pages. [retrieved on Mar. 28, 2022], Retrieved from the Internet: URL: https://web.archive.org/web/20160922151304/https://en.wikipedia.org/wiki/Speech_recognition_software_for_Linux.
Wolf et al. On the potential of channel selection for recognition of reverberated speech with multiple microphones. Interspeech, TALP Research Center, Jan. 2010, 5 pages.
Wolfel et al. Multi-source far-distance microphone selection and combination for automatic transcription of lectures, Interspeech 2006—ICSLP, Jan. 2006, 5 pages.
Zhang et al. Noise Robust Speech Recognition Using Multi-Channel Based Channel Selection And Channel Weighting. The Institute of Electronics, Information and Communication Engineers, arXiv:1604.03276v1 [cs.SD] Jan. 1, 2010, 8 pages.
International Bureau, International Search Report and Written Opinion mailed on Nov. 10, 2020, issued in connection with International Application No. PCT/US2020/044250, filed on Jul. 30, 2020, 15 pages.

(56) **References Cited**

OTHER PUBLICATIONS

International Bureau, International Search Report and Written Opinion mailed on Dec. 11, 2019, issued in connection with International Application No. PCT/US2019/052129, filed on Sep. 20, 2019, 18 pages.
International Bureau, International Search Report and Written Opinion mailed on Nov. 13, 2018, issued in connection with International Application No. PCT/US2018/045397, filed on Aug. 6, 2018, 11 pages.
International Bureau, International Search Report and Written Opinion mailed on Jan. 14, 2019, issued in connection with International Application No. PCT/US2018053472, filed on Sep. 28, 2018, 10 pages.
International Bureau, International Search Report and Written Opinion mailed on Jul. 14, 2020, issued in connection with International Application No. PCT/US2020/017150, filed on Feb. 7, 2020, 27 pages.
International Bureau, International Search Report and Written Opinion mailed on Nov. 14, 2017, issued in connection with International Application No. PCT/US2017/045521, filed on Aug. 4, 2017, 10 pages.
International Bureau, International Search Report and Written Opinion mailed on Jul. 17, 2019, issued in connection with International Application No. PCT/US2019/032934, filed on May 17, 2019, 17 pages.
International Bureau, International Search Report and Written Opinion mailed on Nov. 18, 2019, issued in connection with International Application No. PCT/US2019/048558, filed on Aug. 28, 2019, 11 pages.
International Bureau, International Search Report and Written Opinion mailed on Nov. 18, 2019, issued in connection with International Application No. PCT/US2019052841, filed on Sep. 25, 2019, 12 pages.
International Bureau, International Search Report and Written Opinion mailed on Mar. 2, 2020, issued in connection with International Application No. PCT/US2019064907, filed on Dec. 6, 2019, 11 pages.
International Bureau, International Search Report and Written Opinion mailed on Mar. 2, 2020, issued in connection with International Application No. PCT/US2019/064907, filed on Dec. 6, 2019, 9 pages.
International Bureau, International Search Report and Written Opinion mailed on Dec. 20, 2019, issued in connection with International Application No. PCT/US2019052654, filed on Sep. 24, 2019, 11 pages.
International Bureau, International Search Report and Written Opinion mailed on Sep. 21, 2020, issued in connection with International Application No. PCT/US2020/037229, filed on Jun. 11, 2020, 17 pages.
International Bureau, International Search Report and Written Opinion mailed on Oct. 22, 2020, issued in connection with International Application No. PCT/US2020/044282, filed on Jul. 30, 2020, 15 pages.
International Bureau, International Search Report and Written Opinion mailed on Apr. 23, 2021, issued in connection with International Application No. PCT/US2021/070007, filed on Jan. 6, 2021, 11 pages.
International Bureau, International Search Report and Written Opinion mailed on Jul. 24, 2018, issued in connection with International Application No. PCT/US2018/019010, filed on Feb. 21, 2018, 12 pages.
International Bureau, International Search Report and Written Opinion, mailed on Feb. 27, 2019, issued in connection with International Application No. PCT/US2018/053123, filed on Sep. 27, 2018, 16 pages.
International Bureau, International Search Report and Written Opinion mailed on Sep. 27, 2019, issued in connection with International Application No. PCT/US2019/039828, filed on Jun. 28, 2019, 13 pages.
International Bureau, International Search Report and Written Opinion mailed on Nov. 29, 2019, issued in connection with International Application No. PCT/US2019/053253, filed on Sep. 29, 2019, 14 pages.
International Bureau, International Search Report and Written Opinion mailed on Sep. 4, 2019, issued in connection with International Application No. PCT/US2019/033945, filed on May 24, 2019, 8 pages.
International Bureau, International Search Report and Written Opinion mailed on Aug. 6, 2020, issued in connection with International Application No. PCT/FR2019/000081, filed on May 24, 2019, 12 pages.
International Bureau, International Search Report and Written Opinion mailed on Dec. 6, 2018, issued in connection with International Application No. PCT/US2018/050050, filed on Sep. 7, 2018, 9 pages.
International Bureau, International Search Report and Written Opinion mailed on Dec. 6, 2019, issued in connection with International Application No. PCT/US2019050852, filed on Sep. 12, 2019, 10 pages.
International Bureau, International Search Report and Written Opinion mailed on Oct. 6, 2017, issued in connection with International Application No. PCT/US2017/045551, filed on Aug. 4, 2017, 12 pages.
International Bureau, International Search Report and Written Opinion mailed on Apr. 8, 2020, issued in connection with International Application No. PCT/US2019/067576, filed on Dec. 19, 2019, 12 pages.
International Searching Authority, International Search Report and Written Opinion mailed on Feb. 8, 2021, issued in connection with International Application No. PCT/EP2020/082243, filed on Nov. 16, 2020, 10 pages.
International Searching Authority, International Search Report and Written Opinion mailed on Feb. 12, 2021, issued in connection with International Application No. PCT/US2020/056632, filed on Oct. 21, 2020, 10 pages.
International Searching Authority, International Search Report and Written Opinion mailed on Dec. 19, 2018, in connection with International Application No. PCT/US2018/053517, 13 pages.
International Searching Authority, International Search Report and Written Opinion mailed on Nov. 22, 2017, issued in connection with International Application No. PCT/US2017/054063, filed on Sep. 28, 2017, 11 pages.
International Searching Authority, International Search Report and Written Opinion mailed on Apr. 23, 2021, issued in connection with International Application No. PCT/US2020/066231, filed on Dec. 18, 2020, 9 pages.
International Searching Authority, International Search Report and Written Opinion mailed on Jan. 23, 2018, issued in connection with International Application No. PCT/US2017/57220, filed on Oct. 18, 2017, 8 pages.
International Searching Authority, International Search Report and Written Opinion mailed on May 23, 2017, issued in connection with International Application No. PCT/US2017/018739, Filed on Feb. 21, 2017, 10 pages.
International Searching Authority, International Search Report and Written Opinion mailed on Oct. 23, 2017, issued in connection with International Application No. PCT/US2017/042170, filed on Jul. 14, 2017, 15 pages.
International Searching Authority, International Search Report and Written Opinion mailed on Oct. 24, 2017, issued in connection with International Application No. PCT/US2017/042227, filed on Jul. 14, 2017, 16 pages.
International Searching Authority, International Search Report and Written Opinion mailed on May 30, 2017, issued in connection with International Application No. PCT/US2017/018728, Filed on Feb. 21, 2017, 11 pages.
Japanese Patent Office, Decision of Refusal and Translation mailed on Jun. 8, 2021, issued in connection with Japanese Patent Application No. 2019-073348, 5 pages.
Japanese Patent Office, English Translation of Office Action mailed on Nov. 17, 2020, issued in connection with Japanese Application No. 2019-145039, 5 pages.

(56) **References Cited**

OTHER PUBLICATIONS

Japanese Patent Office, English Translation of Office Action mailed on Aug. 27, 2020, issued in connection with Japanese Application No. 2019-073349, 6 pages.
Japanese Patent Office, English Translation of Office Action mailed on Jul. 30, 2020, issued in connection with Japanese Application No. 2019-517281, 26 pages.
Japanese Patent Office, Non-Final Office Action and Translation mailed on Nov. 5, 2019, issued in connection with Japanese Patent Application No. 2019-517281, 6 pages.
Japanese Patent Office, Notice of Reasons for Refusal and Translation mailed on Jun. 22, 2021, issued in connection with Japanese Patent Application No. 2020-517935, 4 pages.
Japanese Patent Office, Office Action and Translation mailed on Mar. 16, 2021, issued in connection with Japanese Patent Application No. 2020-506725, 7 pages.
Japanese Patent Office, Office Action and Translation mailed on Nov. 17, 2020, issued in connection with Japanese Patent Application No. 2019-145039, 7 pages.
Japanese Patent Office, Office Action and Translation mailed on Apr. 20, 2021, issued in connection with Japanese Patent Application No. 2020-513852, 9 pages.
Japanese Patent Office, Office Action and Translation mailed on Feb. 24, 2021, issued in connection with Japanese Patent Application No. 2019-517281, 4 pages.
Japanese Patent Office, Office Action and Translation mailed on Apr. 27, 2021, issued in connection with Japanese Patent Application No. 2020-518400, 10 pages.
Japanese Patent Office, Office Action and Translation mailed on Aug. 27, 2020, issued in connection with Japanese Patent Application No. 2019-073349, 6 pages.
Japanese Patent Office, Office Action and Translation mailed on Jul. 30, 2020, issued in connection with Japanese Patent Application No. 2019-517281, 6 pages.
Japanese Patent Office, Office Action and Translation mailed on Jul. 6, 2020, issued in connection with Japanese Patent Application No. 2019-073348, 10 pages.
Japanese Patent Office, Office Action and Translation mailed on Jul. 6, 2021, issued in connection with Japanese Patent Application No. 2019-073349, 6 pages.
Xu et al. An End-to-end Approach for Handling Unknown Slot Values in Dialogue State Tracking. ARXIV.org, Cornell University Library, May 3, 2018, 10 pages.
Yamaha DME 64 Owner's Manual; copyright 2004, 80 pages.
Yamaha DME Designer 3.0 Owner's Manual; Copyright 2008, 501 pages.
Yamaha DME Designer 3.5 setup manual guide; copyright 2004, 16 pages.
Yamaha DME Designer 3.5 User Manual; Copyright 2004, 507 pages.
Zaykovskiy, Dmitry. Survey of the Speech Recognition Techniques for Mobile Devices. Proceedings of Specom 2006, Jun. 25, 2006, 6 pages.
Non-Final Office Action mailed on May 22, 2018, issued in connection with U.S. Appl. No. 15/946,599, filed Apr. 5, 2018, 19 pages.
Non-Final Office Action mailed on Sep. 22, 2020, issued in connection with U.S. Appl. No. 16/539,843, filed Aug. 13, 2019, 7 pages.
Non-Final Office Action mailed on Jun. 23, 2021, issued in connection with U.S. Appl. No. 16/439,032, filed Jun. 12, 2019, 13 pages.
Non-Final Office Action mailed on May 23, 2019, issued in connection with U.S. Appl. No. 16/154,071, filed Oct. 8, 2018, 36 pages.
Non-Final Office Action mailed on Nov. 23, 2020, issued in connection with U.S. Appl. No. 16/524,306, filed Jul. 29, 2019, 14 pages.
Non-Final Office Action mailed on Sep. 23, 2020, issued in connection with U.S. Appl. No. 16/177,185, filed Oct. 31, 2018, 17 pages.
Non-Final Office Action mailed on Aug. 24, 2017, issued in connection with U.S. Appl. No. 15/297,627, filed Oct. 19, 2016, 13 pages.
Non-Final Office Action mailed on Jul. 24, 2019, issued in connection with U.S. Appl. No. 16/439,009, filed Jun. 12, 2019, 26 pages.
Non-Final Office Action mailed on Jul. 25, 2017, issued in connection with U.S. Appl. No. 15/273,679, filed Jul. 22, 2016, 11 pages.
Non-Final Office Action mailed on Dec. 26, 2018, issued in connection with U.S. Appl. No. 16/154,469, filed Oct. 8, 2018, 7 pages.
Non-Final Office Action mailed on Jan. 26, 2017, issued in connection with U.S. Appl. No. 15/098,867, filed Apr. 14, 2016, 16 pages.
Non-Final Office Action mailed on Oct. 26, 2017, issued in connection with U.S. Appl. No. 15/438,744, filed Feb. 21, 2017, 12 pages.
Non-Final Office Action mailed on Oct. 26, 2021, issued in connection with U.S. Appl. No. 16/736,725, filed Jan. 7, 2020, 12 pages.
Non-Final Office Action mailed on Jun. 27, 2018, issued in connection with U.S. Appl. No. 15/438,749, filed Feb. 21, 2017, 16 pages.
Non-Final Office Action mailed on Jun. 27, 2019, issued in connection with U.S. Appl. No. 16/437,437, filed Jun. 11, 2019, 8 pages.
Non-Final Office Action mailed on Jun. 27, 2019, issued in connection with U.S. Appl. No. 16/437,476, filed Jun. 11, 2019, 8 pages.
Non-Final Office Action mailed on Mar. 27, 2020, issued in connection with U.S. Appl. No. 16/790,621, filed Feb. 13, 2020, 8 pages.
Non-Final Office Action mailed on May 27, 2020, issued in connection with U.S. Appl. No. 16/715,713, filed Dec. 16, 2019, 14 pages.
Non-Final Office Action mailed on Oct. 27, 2020, issued in connection with U.S. Appl. No. 16/213,570, filed Dec. 7, 2018, 13 pages.
Non-Final Office Action mailed on Oct. 27, 2020, issued in connection with U.S. Appl. No. 16/715,984, filed Dec. 16, 2019, 14 pages.
Non-Final Office Action mailed on Oct. 27, 2020, issued in connection with U.S. Appl. No. 16/819,755, filed Mar. 16, 2020, 8 pages.
Non-Final Office Action mailed on Oct. 28, 2019, issued in connection with U.S. Appl. No. 16/145,275, filed Sep. 28, 2018, 11 pages.
Non-Final Office Action mailed on Oct. 28, 2021, issued in connection with U.S. Appl. No. 16/378,516, filed Apr. 8, 2019, 10 pages.
Non-Final Office Action mailed on Oct. 28, 2021, issued in connection with U.S. Appl. No. 17/247,736, filed Dec. 21, 2020, 12 pages.
Non-Final Office Action mailed on Mar. 29, 2019, issued in connection with U.S. Appl. No. 16/102,650, filed Aug. 13, 2018, 11 pages.
Non-Final Office Action mailed on Mar. 29, 2021, issued in connection with U.S. Appl. No. 16/528,265, filed Jul. 31, 2019, 18 pages.
Non-Final Office Action mailed on Sep. 29, 2020, issued in connection with U.S. Appl. No. 16/402,617, filed May 3, 2019, 12 pages.
Non-Final Office Action mailed on Dec. 3, 2020, issued in connection with U.S. Appl. No. 16/145,275, filed Sep. 28, 2018, 11 pages.
Non-Final Office Action mailed on Jul. 3, 2019, issued in connection with U.S. Appl. No. 15/948,541, filed Apr. 9, 2018, 7 pages.
Non-Final Office Action mailed on May 3, 2019, issued in connection with U.S. Appl. No. 16/178,122, filed Nov. 1, 2018, 14 pages.
Non-Final Office Action mailed on Oct. 3, 2018, issued in connection with U.S. Appl. No. 16/102,153, filed Aug. 13, 2018, 20 pages.

(56) **References Cited**

OTHER PUBLICATIONS

Non-Final Office Action mailed on Apr. 30, 2019, issued in connection with U.S. Appl. No. 15/718,521, filed Sep. 28, 2017, 39 pages.
Non-Final Office Action mailed on Jun. 30, 2017, issued in connection with U.S. Appl. No. 15/277,810, filed Sep. 27, 2016, 13 pages.
Non-Final Office Action mailed on Apr. 4, 2019, issued in connection with U.S. Appl. No. 15/718,911, filed Sep. 28, 2017, 21 pages.
Non-Final Office Action mailed on Aug. 4, 2020, issued in connection with U.S. Appl. No. 16/600,644, filed Oct. 14, 2019, 30 pages.
Non-Final Office Action mailed on Jan. 4, 2019, issued in connection with U.S. Appl. No. 15/948,541, filed Apr. 9, 2018, 6 pages.
Non-Final Office Action mailed on Apr. 6, 2020, issued in connection with U.S. Appl. No. 16/424,825, filed May 29, 2019, 22 pages.
Non-Final Office Action mailed on Feb. 6, 2018, issued in connection with U.S. Appl. No. 15/211,689, filed Jul. 15, 2016, 32 pages.
Non-Final Office Action mailed on Feb. 6, 2018, issued in connection with U.S. Appl. No. 15/237,133, filed Aug. 15, 2016, 6 pages.
Non-Final Office Action mailed on Jan. 6, 2021, issued in connection with U.S. Appl. No. 16/439,046, filed Jun. 12, 2019, 13 pages.
Non-Final Office Action mailed on Mar. 6, 2020, issued in connection with U.S. Appl. No. 16/141,875, filed Sep. 25, 2018, 8 pages.
Non-Final Office Action mailed on Sep. 6, 2017, issued in connection with U.S. Appl. No. 15/131,254, filed Apr. 18, 2016, 13 pages.
Non-Final Office Action mailed on Sep. 6, 2018, issued in connection with U.S. Appl. No. 15/098,760, filed Apr. 14, 2016, 29 pages.
Non-Final Office Action mailed on Sep. 8, 2020, issued in connection with U.S. Appl. No. 15/936,177, filed Mar. 26, 2018, 19 pages.
Non-Final Office Action mailed on Apr. 9, 2018, issued in connection with U.S. Appl. No. 15/804,776, filed Nov. 6, 2017, 18 pages.
Non-Final Office Action mailed on Apr. 9, 2021, issued in connection with U.S. Appl. No. 16/780,483, filed Feb. 3, 2020, 45 pages.
Non-Final Office Action mailed on Feb. 9, 2021, issued in connection with U.S. Appl. No. 16/806,747, filed Mar. 2, 2020, 16 pages.
Non-Final Office Action mailed on May 9, 2018, issued in connection with U.S. Appl. No. 15/818,051, filed Nov. 20, 2017, 22 pages.
Non-Final Office Action mailed on Sep. 9, 2020, issued in connection with U.S. Appl. No. 16/168,389, filed Oct. 23, 2018, 29 pages.
Notice of Allowance mailed Aug. 10, 2021, issued in connection with U.S. Appl. No. 17/157,686, filed Jan. 25, 2021, 9 pages.
Japanese Patent Office, Office Action and Translation mailed on Oct. 8, 2019, issued in connection with Japanese Patent Application No. 2019-521032, 5 pages.
Japanese Patent Office, Office Action Translation mailed on Nov. 5, 2019, issued in connection with Japanese Patent Application No. 2019-517281, 2 pages.
Japanese Patent Office, Office Action Translation mailed on Oct. 8, 2019, issued in connection with Japanese Patent Application No. 2019-521032, 8 pages.
Jo et al., "Synchronized One-to-many Media Streaming with Adaptive Playout Control," Proceedings of SPIE, 2002, pp. 71-82, vol. 4861.
Johnson, "Implementing Neural Networks into Modern Technology," IJCNN'99. International Joint Conference on Neural Networks . Proceedings [Cat. No. 99CH36339], Washington, DC, USA, 1999, pp. 1028-1032, vol. 2, doi: 10.1109/IJCNN.1999.831096. [retrieved on Jun. 22, 2020].
Jones, Stephen, "Dell Digital Audio Receiver: Digital upgrade for your analog stereo," Analog Stereo, Jun. 24, 2000 http://www.reviewsonline.com/articles/961906864.htm retrieved Jun. 18, 2014, 2 pages.
Jose Alvarez and Mathieu Salzmann "Compression-aware Training of Deep Networks" 31st Conference on Neural Information Processing Systems, Nov. 13, 2017, 12pages.
Joseph Szurley et al, "Efficient computation of microphone utility in a wireless acoustic sensor network with multi-channel Wiener filter based noise reduction", 2012 IEEE International Conference on Acoustics, Speech and Signal Processing, Kyoto, Japan, Mar. 25-30, 2012, pp. 2657-2660, XP032227701, DOI: 10.1109/ICASSP .2012.6288463 ISBN: 978-1-4673-0045-2.
Ketabdar et al. Detection of Out-of-Vocabulary Words in Posterior Based ASR. Proceedings of Interspeech 2007, Aug. 27, 2007, 4 pages.
Kim et al. Character-Aware Neural Language Models. Retrieved from the Internet: URL: https://arxiv.org/pdf/1508.06615v3.pdf, Oct. 16, 2015, 9 pages.
Korean Patent Office, Korean Examination Report and Translation mailed on Apr. 26, 2021, issued in connection with Korean Application No. 10-2021-7008937, 15 pages.
Korean Patent Office, Korean Office Action and Translation mailed on Oct. 14, 2021, issued in connection with Korean Application No. 10-2020-7011843, 29 pages.
Korean Patent Office, Korean Office Action and Translation mailed on Aug. 16, 2019, issued in connection with Korean Application No. 10-2018-7027452, 14 pages.
Korean Patent Office, Korean Office Action and Translation mailed on Apr. 2, 2020, issued in connection with Korean Application No. 10-2020-7008486, 12 pages.
Korean Patent Office, Korean Office Action and Translation mailed on Mar. 25, 2020, issued in connection with Korean Application No. 10-2019-7012192, 14 pages.
Korean Patent Office, Korean Office Action and Translation mailed on Aug. 26, 2020, issued in connection with Korean Application No. 10-2019-7027640, 16 pages.
Korean Patent Office, Korean Office Action and Translation mailed on Mar. 30, 2020, issued in connection with Korean Application No. 10-2020-7004425, 5 pages.
Korean Patent Office, Korean Office Action and Translation mailed on Jan. 4, 2021, issued in connection with Korean Application No. 10-2020-7034425, 14 pages.
Korean Patent Office, Korean Office Action and Translation mailed on Sep. 9, 2019, issued in connection with Korean Application No. 10-2018-7027451, 21 pages.
Korean Patent Office, Korean Office Action mailed on May 8, 2019, issued in connection with Korean Application No. 10-2018-7027451, 7 pages.
Korean Patent Office, Korean Office Action mailed on May 8, 2019, issued in connection with Korean Application No. 10-2018-7027452, 5 pages.
Lei et al. Accurate and Compact Large Vocabulary Speech Recognition on Mobile Devices. Interspeech 2013, Aug. 25, 2013, 4 pages.
Lengerich et al. An End-to-End Architecture for Keyword Spotting and Voice Activity Detection, arXiv:1611.09405v1, Nov. 28, 2016, 5 pages.
Louderback, Jim, "Affordable Audio Receiver Furnishes Homes With MP3," TechTV Vault. Jun. 28, 2000 retrieved Jul. 10, 2014, 2 pages.
Maja Taseska and Emanual A.P. Habets, "MMSE-Based Blind Source Extraction in Diffuse Noise Fields Using a Complex Coherence-Based a Priori Sap Estimator." International Workshop on Acoustic Signal Enhancement 2012, Sep. 4-6, 2012, 4pages.
Matrix—The Ultimate Development Board Sep. 14, 2019 Matrix—The Ultimate Development Board Sep. 14, 2019 https-//web.archive.org/web/20190914035838/https-//www.matrix.one/ , 1 page.
Mesaros et al. Detection and Classification of Acoustic Scenes and Events: Outcome of the DCASE 2016 Challenge. IEEE/ACM Transactions on Audio, Speech, and Language Processing. Feb. 2018, 16 pages.
Morales-Cordovilla et al. "Room Localization for Distant Speech Recognition," Proceedings of Interspeech 2014, Sep. 14, 2014, 4 pages.
Newman, Jared. "Chromecast Audio's multi-room support has arrived," Dec. 11, 2015, https://www.pcworld.com/article/3014204/customer-electronic/chromcase-audio-s-multi-room-support-has . . . , 1 page.
Ngo et al. "Incorporating the Conditional Speech Presence Probability in Multi-Channel Wiener Filter Based Noise Reduction in Hearing Aids." EURASIP Journal on Advances in Signal Processing vol. 2009, Jun. 2, 2009, 11 pages.
Non-Final Office Action mailed Jul. 12, 2021, issued in connection with U.S. Appl. No. 17/008,104, filed Aug. 31, 2020, 6 pages.

(56) **References Cited**

OTHER PUBLICATIONS

Non-Final Office Action mailed Jun. 18, 2021, issued in connection with U.S. Appl. No. 17/236,559, filed Apr. 21, 2021, 9 pages.
Non-Final Office Action mailed Apr. 21, 2021, issued in connection with U.S. Appl. No. 16/109,375, filed Aug. 22, 2018, 9 pages.
Non-Final Office Action mailed Dec. 21, 2020, issued in connection with U.S. Appl. No. 16/153,530, filed Oct. 5, 2018, 22 pages.
Non-Final Office Action mailed Jul. 22, 2021, issued in connection with U.S. Appl. No. 16/179,779, filed Nov. 2, 2018, 19 pages.
Non-Final Office Action mailed Apr. 23, 2021, issued in connection with U.S. Appl. No. 16/660,197, filed Oct. 22, 2019, 9 pages.
Non-Final Office Action mailed Jun. 25, 2021, issued in connection with U.S. Appl. No. 16/213,570, filed Dec. 7, 2018, 11 pages.
Non-Final Office Action mailed Jul. 8, 2021, issued in connection with U.S. Appl. No. 16/813,643, filed Mar. 9, 2020, 12 pages.
Non-Final Office Action mailed Dec. 9, 2020, issued in connection with U.S. Appl. No. 16/271,550, filed Feb. 8, 2019, 35 pages.
Non-Final Office Action mailed Jul. 9, 2021, issued in connection with U.S. Appl. No. 16/806,747, filed Mar. 2, 2020, 18 pages.
Non-Final Office Action mailed on Jun. 1, 2017, issued in connection with U.S. Appl. No. 15/223,218, filed Jul. 29, 2016, 7 pages.
Non-Final Office Action mailed on Nov. 2, 2017, issued in connection with U.S. Appl. No. 15/584,782, filed May 2, 2017, 11 pages.
Non-Final Office Action mailed on Nov. 3, 2017, issued in connection with U.S. Appl. No. 15/438,741, filed Feb. 21, 2017, 11 pages.
Non-Final Office Action mailed on Nov. 4, 2019, issued in connection with U.S. Appl. No. 16/022,662, filed Jun. 28, 2018, 16 pages.
Non-Final Office Action mailed on Sep. 5, 2019, issued in connection with U.S. Appl. No. 16/416,752, filed May 20, 2019, 14 pages.
Non-Final Office Action mailed on Feb. 7, 2017, issued in connection with U.S. Appl. No. 15/131,244, filed Apr. 18, 2016, 12 pages.
Non-Final Office Action mailed on Feb. 8, 2017, issued in connection with U.S. Appl. No. 15/098,892, filed Apr. 14, 2016, 17 pages.
Non-Final Office Action mailed on Mar. 9, 2017, issued in connection with U.S. Appl. No. 15/098,760, filed Apr. 14, 2016, 13 pages.
Non-Final Office Action mailed on Oct. 9, 2019, issued in connection with U.S. Appl. No. 15/936,177, filed Mar. 26, 2018, 16 pages.
Non-Final Office Action mailed on Jul. 1, 2020, issued in connection with U.S. Appl. No. 16/138,111, filed Sep. 21, 2018, 14 pages.
Non-Final Office Action mailed on Jan. 10, 2018, issued in connection with U.S. Appl. No. 15/098,718, filed Apr. 14, 2016, 15 pages.
Non-Final Office Action mailed on Jan. 10, 2018, issued in connection with U.S. Appl. No. 15/229,868, filed Aug. 5, 2016, 13 pages.
Non-Final Office Action mailed on Jan. 10, 2018, issued in connection with U.S. Appl. No. 15/438,725, filed Feb. 21, 2017, 15 pages.
Non-Final Office Action mailed on Sep. 10, 2018, issued in connection with U.S. Appl. No. 15/670,361, filed Aug. 7, 2017, 17 pages.
Non-Final Office Action mailed on Aug. 11, 2021, issued in connection with U.S. Appl. No. 16/841,116, filed Apr. 6, 2020, 9 pages.
Non-Final Office Action mailed on Feb. 11, 2021, issued in connection with U.S. Appl. No. 16/876,493, filed May 18, 2020, 16 pages.
Non-Final Office Action mailed on Mar. 11, 2021, issued in connection with U.S. Appl. No. 16/834,483, filed Mar. 30, 2020, 11 pages.
Non-Final Office Action mailed on Oct. 11, 2019, issued in connection with U.S. Appl. No. 16/177,185, filed Oct. 31, 2018, 14 pages.
Non-Final Office Action mailed on Sep. 11, 2020, issued in connection with U.S. Appl. No. 15/989,715, filed May 25, 2018, 8 pages.
Non-Final Office Action mailed on Sep. 11, 2020, issued in connection with U.S. Appl. No. 16/219,702, filed Dec. 13, 2018, 9 pages.
Non-Final Office Action mailed on Apr. 12, 2021, issued in connection with U.S. Appl. No. 16/528,224, filed Jul. 31, 2019, 9 pages.
Non-Final Office Action mailed on Dec. 12, 2016, issued in connection with U.S. Appl. No. 15/098,718, filed Apr. 14, 2016, 11 pages.
Non-Final Office Action mailed on Feb. 12, 2019, issued in connection with U.S. Appl. No. 15/670,361, filed Aug. 7, 2017, 13 pages.
Non-Final Office Action mailed on Jan. 13, 2017, issued in connection with U.S. Appl. No. 15/098,805, filed Apr. 14, 2016, 11 pages.
Non-Final Office Action mailed on Nov. 13, 2018, issued in connection with U.S. Appl. No. 15/717,621, filed Sep. 27, 2017, 23 pages.
Non-Final Office Action mailed on Nov. 13, 2018, issued in connection with U.S. Appl. No. 16/160,107, filed Oct. 15, 2018, 8 pages.
Non-Final Office Action mailed on Nov. 13, 2019, issued in connection with U.S. Appl. No. 15/984,073, filed May 18, 2018, 18 pages.
Non-Final Office Action mailed on Oct. 13, 2021, issued in connection with U.S. Appl. No. 16/679,538, filed Nov. 11, 2019, 8 pages.
Non-Final Office Action mailed on May 14, 2020, issued in connection with U.S. Appl. No. 15/948,541, filed Apr. 9, 2018, 8 pages.
Non-Final Office Action mailed on Sep. 14, 2017, issued in connection with U.S. Appl. No. 15/178,180, filed Jun. 9, 2016, 16 pages.
Non-Final Office Action mailed on Sep. 14, 2018, issued in connection with U.S. Appl. No. 15/959,907, filed Apr. 23, 2018, 15 pages.
Non-Final Office Action mailed on Apr. 15, 2020, issued in connection with U.S. Appl. No. 16/138,111, filed Sep. 21, 2018, 15 pages.
Non-Final Office Action mailed on Dec. 15, 2020, issued in connection with U.S. Appl. No. 17/087,423, filed Nov. 2, 2020, 7 pages.
Non-Final Office Action mailed on Jan. 15, 2019, issued in connection with U.S. Appl. No. 16/173,797, filed Oct. 29, 2018, 6 pages.
Non-Final Office Action mailed on Nov. 15, 2019, issued in connection with U.S. Appl. No. 16/153,530, filed Oct. 5, 2018, 17 pages.
Non-Final Office Action mailed on Mar. 16, 2018, issued in connection with U.S. Appl. No. 15/681,937, filed Aug. 21, 2017, 5 pages.
Non-Final Office Action mailed on Oct. 16, 2018, issued in connection with U.S. Appl. No. 15/131,254, filed Apr. 18, 2016, 16 pages.
Non-Final Office Action mailed on Sep. 16, 2021, issued in connection with U.S. Appl. No. 16/879,553, filed May 20, 2020, 24 pages.
Non-Final Office Action mailed on Aug. 17, 2021, issued in connection with U.S. Appl. No. 17/236,559, filed Apr. 21, 2021, 10 pages.
Non-Final Office Action mailed on Sep. 17, 2020, issued in connection with U.S. Appl. No. 16/600,949, filed Oct. 14, 2019, 29 pages.
Non-Final Office Action mailed on Apr. 18, 2018, issued in connection with U.S. Appl. No. 15/811,468, filed Nov. 13, 2017, 14 pages.
Non-Final Office Action mailed on Aug. 18, 2021, issued in connection with U.S. Appl. No. 16/845,946, filed Apr. 10, 2020, 14 pages.
Non-Final Office Action mailed on Jan. 18, 2019, issued in connection with U.S. Appl. No. 15/721,141, filed Sep. 29, 2017, 18 pages.
Non-Final Office Action mailed on Oct. 18, 2019, issued in connection with U.S. Appl. No. 15/098,760, filed Apr. 14, 2016, 27 pages.
Non-Final Office Action mailed on Sep. 18, 2019, issued in connection with U.S. Appl. No. 16/179,779, filed Nov. 2, 2018, 14 pages.
Non-Final Office Action mailed on Apr. 19, 2017, issued in connection with U.S. Appl. No. 15/131,776, filed Apr. 18, 2016, 12 pages.

(56) **References Cited**

OTHER PUBLICATIONS

Non-Final Office Action mailed on Dec. 19, 2019, issued in connection with U.S. Appl. No. 16/147,710, filed Sep. 29, 2018, 10 pages.
Non-Final Office Action mailed on Feb. 19, 2020, issued in connection with U.S. Appl. No. 16/148,879, filed Oct. 1, 2018, 15 pages.
Non-Final Office Action mailed on Sep. 2, 2020, issued in connection with U.S. Appl. No. 16/290,599, filed Mar. 1, 2019, 17 pages.
Non-Final Office Action mailed on Sep. 2, 2021, issued in connection with U.S. Appl. No. 16/947,895, filed Aug. 24, 2020, 16 pages.
Non-Final Office Action mailed on Feb. 20, 2018, issued in connection with U.S. Appl. No. 15/211,748, filed Jul. 15, 2016, 31 pages.
Non-Final Office Action mailed on Jun. 20, 2019, issued in connection with U.S. Appl. No. 15/946,585, filed Apr. 5, 2018, 10 pages.
Non-Final Office Action mailed on Apr. 21, 2021, issued in connection with U.S. Appl. No. 16/109,375, filed Aug. 22, 2018, 9 pages.
Non-Final Office Action mailed on Aug. 21, 2019, issued in connection with U.S. Appl. No. 16/192,126, filed Nov. 15, 2018, 8 pages.
Non-Final Office Action mailed on Feb. 21, 2019, issued in connection with U.S. Appl. No. 16/214,666, filed Dec. 10, 2018, 12 pages.
Non-Final Office Action mailed on Jan. 21, 2020, issued in connection with U.S. Appl. No. 16/214,711, filed Dec. 10, 2018, 9 pages.
Non-Final Office Action mailed on Jan. 21, 2020, issued in connection with U.S. Appl. No. 16/598,125, filed Oct. 10, 2019, 25 pages.
Non-Final Office Action mailed on Oct. 21, 2019, issued in connection with U.S. Appl. No. 15/973,413, filed May 7, 2018, 10 pages.
Non-Final Office Action mailed on Jul. 22, 2020, issued in connection with U.S. Appl. No. 16/145,275, filed Sep. 28, 2018, 11 pages.
Final Office Action mailed on Mar. 21, 2022, issued in connection with U.S. Appl. No. 16/153,530, filed Oct. 5, 2018, 23 pages.
Final Office Action mailed on Aug. 22, 2022, issued in connection with U.S. Appl. No. 16/168,389, filed Oct. 23, 2018, 37 pages.
Final Office Action mailed on Jul. 27, 2022, issued in connection with U.S. Appl. No. 16/989,350, filed Aug. 10, 2020, 15 pages.
Final Office Action mailed on Mar. 29, 2023, issued in connection with U.S. Appl. No. 17/549,034, filed Dec. 13, 2021, 21 pages.
Final Office Action mailed on Nov. 29, 2021, issued in connection with U.S. Appl. No. 17/236,559, filed Apr. 21, 2021, 11 pages.
Final Office Action mailed on Jun. 7, 2022, issued in connection with U.S. Appl. No. 16/736,725, filed Jan. 7, 2020, 14 pages.
Helwani et al. Source-domain adaptive filtering for MIMO systems with application to acoustic echo cancellation. In 2010 IEEE International Conference on Acoustics, Speech and Signal Processing, Jun. 28, 2010, 4 pages. [retrieved on Feb. 23, 2023], Retrieved from the Internet: URL: https://scholar.google.com/scholar?hl=en&as_sdt=0%2C14&q=SOURCE-DOMAIN+ADAPTIVE+FILTERING+FOR+MIMO+SYSTEMS+WITH+APPLICATION+TO+ACOUSTIC+ECHO+CANCELLATION&btnG=.
International Bureau, International Preliminary Report on Patentability, mailed on Jul. 21, 2022, issued in connection with International Application No. PCT/US2021/070007, filed on Jan. 6, 2021, 8 pages.
International Bureau, International Preliminary Report on Patentability, mailed on Apr. 26, 2022, issued in connection with International Application No. PCT/US2020/056632, filed on Oct. 21, 2020, 7 pages.
Japanese Patent Office, Decision of Refusal and Translation mailed on Oct. 4, 2022, issued in connection with Japanese Patent Application No. 2021-535871, 6 pages.
Japanese Patent Office, Decision of Refusal and Translation mailed on Jul. 26, 2022, issued in connection with Japanese Patent Application No. 2020-513852, 10 pages.
Japanese Patent Office, Non-Final Office Action mailed on Apr. 4, 2023, issued in connection with Japanese Patent Application No. 2021-573944, 5 pages.
Japanese Patent Office, Notice of Reasons for Refusal and Translation mailed on Sep. 13, 2022, issued in connection with Japanese Patent Application No. 2021-163622, 12 pages.
Japanese Patent Office, Notice of Reasons for Refusal and Translation mailed on Nov. 28, 2021, issued in connection with Japanese Patent Application No. 2020-550102, 9 pages.
Japanese Patent Office, Office Action and Translation mailed on Nov. 15, 2022, issued in connection with Japanese Patent Application No. 2021-146144, 9 pages.
Japanese Patent Office, Office Action mailed on Dec. 7, 2021, issued in connection with Japanese Patent Application No. 2020-513852, 6 pages.
Japanese Patent Office, Office Action mailed on Nov. 29, 2022, issued in connection with Japanese Patent Application No. 2021-181224, 6 pages.
Katsamanis et al. Robust far-field spoken command recognition for home automation combining adaptation and multichannel processing. ICASSP, IEEE International Conference on Acoustics, Speech and Signal Processing—Proceedings, May 2014, pp. 5547-5551.
Korean Patent Office, Korean Examination Report and Translation mailed on Oct. 13, 2022, issued in connection with Korean Application No. 10-2021-7030939, 4 pages.
Korean Patent Office, Korean Examination Report and Translation mailed on Apr. 19, 2022, issued in connection with Korean Application No. 10-2021-7008937, 14 pages.
Korean Patent Office, Korean Examination Report and Translation mailed on Nov. 25, 2021, issued in connection with Korean Application No. 10-2021-7008937, 14 pages.
Korean Patent Office, Korean Examination Report and Translation mailed on Jul. 26, 2022, issued in connection with Korean Application No. 10-2022-7016656, 17 pages.
Korean Patent Office, Korean Examination Report and Translation mailed on Dec. 27, 2021, issued in connection with Korean Application No. 10-2021-7008937, 22 pages.
Korean Patent Office, Korean Examination Report and Translation mailed on Mar. 31, 2023, issued in connection with Korean Application No. 10-2022-7016656, 7 pages.
Korean Patent Office, Korean Examination Report and Translation mailed on Oct. 31, 2021, issued in connection with Korean Application No. 10-2022-7024007, 10 pages.
Korean Patent Office, Office Action and Translation mailed on Feb. 27, 2023, issued in connection with Korean Application No. 10-2022-7021879, 5 pages.
Mathias Wolfel. Channel Selection by Class Separability Measures for Automatic Transcriptions on Distant Microphones, Interspeech 2007 10.21437/Interspeech.2007-255, 4 pages.
Molina et al., "Maximum Entropy-Based Reinforcement Learning Using a Confidence Measure in Speech Recognition for Telephone Speech," in IEEE Transactions on Audio, Speech, and Language Processing, vol. 18, No. 5, pp. 1041-1052, Jul. 2010, doi: 10.1109/TASL.2009.2032618. [Retrieved online] URLhttps://ieeexplore.ieee.org/document/5247099?partnum=5247099&searchProductType=IEEE%20Journals%20Transactions.
Non-Final Office Action mailed on Feb. 2, 2023, issued in connection with U.S. Appl. No. 17/305,698, filed Jul. 13, 2021, 16 pages.
Non-Final Office Action mailed on Dec. 5, 2022, issued in connection with U.S. Appl. No. 17/662,302, filed May 6, 2022, 12 pages.
Non-Final Office Action mailed on Oct. 5, 2022, issued in connection with U.S. Appl. No. 17/449,926, filed Oct. 4, 2021, 11 pages.
Non-Final Office Action mailed on Feb. 11, 2022, issued in connection with U.S. Appl. No. 17/145,667, filed Jan. 11, 2021, 9 pages.
Non-Final Office Action mailed on Apr. 12, 2023, issued in connection with U.S. Appl. No. 17/878,649, filed Aug. 1, 2022, 16 pages.
Non-Final Office Action mailed on Nov. 14, 2022, issued in connection with U.S. Appl. No. 17/077,974, filed Oct. 22, 2020, 6 pages.

(56) **References Cited**

OTHER PUBLICATIONS

Non-Final Office Action mailed on Sep. 14, 2022, issued in connection with U.S. Appl. No. 17/446,690, filed Sep. 1, 2021, 10 pages.
Non-Final Office Action mailed on Aug. 15, 2022, issued in connection with U.S. Appl. No. 17/448,015, filed Sep. 17, 2021, 12 pages.
Non-Final Office Action mailed on Dec. 15, 2022, issued in connection with U.S. Appl. No. 17/549,253, filed Dec. 13, 2021, 10 pages.
Non-Final Office Action mailed on Feb. 15, 2023, issued in connection with U.S. Appl. No. 17/453,632, filed Nov. 4, 2021, 12 pages.
Non-Final Office Action mailed on Sep. 15, 2022, issued in connection with U.S. Appl. No. 17/247,507, filed Dec. 14, 2020, 9 pages.
Non-Final Office Action mailed on Sep. 15, 2022, issued in connection with U.S. Appl. No. 17/327,911, filed May 24, 2021, 44 pages.
Non-Final Office Action mailed on Feb. 16, 2023, issued in connection with U.S. Appl. No. 17/305,920, filed Jul. 16, 2021, 12 pages.
Non-Final Office Action mailed on Oct. 18, 2022, issued in connection with U.S. Appl. No. 16/949,973, filed Nov. 23, 2020, 31 pages.
Non-Final Office Action mailed on Sep. 19, 2022, issued in connection with U.S. Appl. No. 17/385,542, filed Jul. 26, 2021, 9 pages.
Non-Final Office Action mailed on Oct. 20, 2022, issued in connection with U.S. Appl. No. 17/532,674, filed Nov. 22, 2021, 52 pages.
Non-Final Office Action mailed on Dec. 22, 2022, issued in connection with U.S. Appl. No. 16/168,389, filed Oct. 23, 2018, 39 pages.
Non-Final Office Action mailed on Mar. 23, 2022, issued in connection with U.S. Appl. No. 16/907,953, filed Jun. 22, 2020, 7 pages.
Non-Final Office Action mailed on Sep. 23, 2022, issued in connection with U.S. Appl. No. 16/153,530, filed Oct. 5, 2018, 25 pages.
Non-Final Office Action mailed on May 24, 2022, issued in connection with U.S. Appl. No. 17/101,949, filed Nov. 23, 2020, 10 pages.
Non-Final Office Action mailed on Oct. 25, 2022, issued in connection with U.S. Appl. No. 17/549,034, filed Dec. 13, 2021, 20 pages.
Non-Final Office Action mailed on May 26, 2022, issued in connection with U.S. Appl. No. 16/989,805, filed Aug. 10, 2020, 14 pages.
Notice of Allowance mailed on Mar. 4, 2020, issued in connection with U.S. Appl. No. 16/444,975, filed Jun. 18, 2019, 10 pages.
Notice of Allowance mailed on Feb. 5, 2020, issued in connection with U.S. Appl. No. 16/178,122, filed Nov. 1, 2018, 9 pages.
Notice of Allowance mailed on Oct. 5, 2018, issued in connection with U.S. Appl. No. 15/211,748, filed Jul. 15, 2018, 10 pages.
Notice of Allowance mailed on Feb. 6, 2019, issued in connection with U.S. Appl. No. 16/102,153, filed Aug. 13, 2018, 9 pages.
Notice of Allowance mailed on Feb. 6, 2020, issued in connection with U.S. Appl. No. 16/227,308, filed Dec. 20, 2018, 7 pages.
Notice of Allowance mailed on Apr. 7, 2020, issued in connection with U.S. Appl. No. 15/098,760, filed Apr. 14, 2016, 7 pages.
Notice of Allowance mailed on Apr. 7, 2020, issued in connection with U.S. Appl. No. 16/147,710, filed Sep. 29, 2018, 15 pages.
Notice of Allowance mailed on Jun. 7, 2019, issued in connection with U.S. Appl. No. 16/102,153, filed Aug. 13, 2018, 9 pages.
Notice of Allowance mailed on Jun. 7, 2021, issued in connection with U.S. Appl. No. 16/528,224, filed Jul. 31, 2019, 9 pages.
Notice of Allowance mailed on Aug. 9, 2018, issued in connection with U.S. Appl. No. 15/229,868, filed Aug. 5, 2016, 11 pages.
Notice of Allowance mailed on Mar. 9, 2018, issued in connection with U.S. Appl. No. 15/584,782, filed May 2, 2017, 8 pages.
Oord et al. WaveNet: A Generative Model for Raw Audio. Arxiv.org, Cornell University Library, Sep. 12, 2016, 15 pages.
Optimizing Siri on HomePod in Far-Field Settings. Audio Software Engineering and Siri Speech Team, Machine Learning Journal vol. 1, Issue 12. https://machinelearning.apple.com/2018/12/03/optimizing-siri-on-homepod-in-far-field-settings.html. Dec. 2018, 18 pages.
Palm, Inc., "Handbook for the Palm VII Handheld," May 2000, 311 pages.
Parada et al. Contextual Information Improves OOV Detection in Speech. Proceedings of the 2010 Annual Conference of the North American Chapter of the Association for Computational Linguistics, Jun. 2, 2010, 9 pages.
Pre-Appeal Brief Decision mailed on Jun. 2, 2021, issued in connection with U.S. Appl. No. 16/213,570, filed Dec. 7, 2018, 2 pages.
Preinterview First Office Action mailed on Aug. 5, 2019, issued in connection with U.S. Appl. No. 16/434,426, filed Jun. 7, 2019, 4 pages.
Preinterview First Office Action mailed on Mar. 25, 2020, issued in connection with U.S. Appl. No. 16/109,375, filed Aug. 22, 2018, 6 pages.
Preinterview First Office Action mailed on Sep. 30, 2019, issued in connection with U.S. Appl. No. 15/989,715, filed May 25, 2018, 4 pages.
Preinterview First Office Action mailed on May 7, 2020, issued in connection with U.S. Appl. No. 16/213,570, filed Dec. 7, 2018, 5 pages.
Preinterview First Office Action mailed on Jan. 8, 2021, issued in connection with U.S. Appl. No. 16/798,967, filed Feb. 24, 2020, 4 pages.
Presentations at WinHEC 2000, May 2000, 138 pages.
Renato De Mori. Spoken Language Understanding: A Survey. Automatic Speech Recognition & Understanding, 2007. IEEE, Dec. 1, 2007, 56 pages.
Restriction Requirement mailed on Aug. 14, 2019, issued in connection with U.S. Appl. No. 16/214,711, filed Dec. 10, 2018, 5 pages.
Restriction Requirement mailed on Aug. 9, 2018, issued in connection with U.S. Appl. No. 15/717,621, filed Sep. 27, 2017, 8 pages.
Rottondi et al., "An Overview on Networked Music Performance Technologies," IEEE Access, vol. 4, pp. 8823-8843, 2016, DOI: 10.1109/ACCESS.2016.2628440, 21 pages.
Rybakov et al. Streaming keyword spotting on mobile devices, arXiv:2005.06720v2, Jul. 29, 2020, 5 pages.
Shan et al. Attention-based End-to-End Models for Small-Footprint Keyword Spotting, arXiv:1803.10916v1, Mar. 29, 2018, 5 pages.
Snips: How to Snips—Assistant creation & Installation, Jun. 26, 2017, 6 pages.
Souden et al. "An Integrated Solution for Online Multichannel Noise Tracking and Reduction." IEEE Transactions on Audio, Speech, and Language Processing, vol. 19. No. 7, Sep. 7, 2011, 11 pages.
Souden et al. "Gaussian Model-Based Multichannel Speech Presence Probability" IEEE Transactions on Audio, Speech, and Language Processing, vol. 18, No. 5, Jul. 5, 2010, 6pages.
Souden et al. "On Optimal Frequency-Domain Multichannel Linear Filtering for Noise Reduction." IEEE Transactions on Audio, Speech, and Language Processing, vol. 18, No. 2, Feb. 2010, 17pages.
Speidel, Hans. Chatbot Training: How to use training data to provide fully automated customer support. Retrieved from the Internet: URL: https://www.crowdguru.de/wp-content/uploads/Case-Study-Chatbox-training-How-to-use-training-data-to-provide-fully-automated-customer-support.pdf. Jun. 29, 2017, 4 pages.
Stemmer et al. Speech Recognition and Understanding on Hardware-Accelerated DSP. Proceedings of Interspeech 2017: Show & Tell Contribution, Aug. 20, 2017, 2 pages.
Steven J. Nowlan and Geoffrey E. Hinton "Simplifying Neural Networks by Soft Weight-Sharing" Neural Computation 4, 1992, 21 pages.
Tsiami et al. "Experiments in acoustic source localization using sparse arrays in adverse indoors environments", 2014 22nd European Signal Processing Conference, Sep. 1, 2014, 5 pages.

(56) **References Cited**

OTHER PUBLICATIONS

Tsung-Hsien Wen et al: "A Network-based End-to-End Trainable Task-oriented Dialogue System", Corr ARXIV. vol. 1604.04562v1, Apr. 15, 2016, pp. 1-11, XP055396370, Stroudsburg, PA, USA.
Tweet: "How to start using Google app voice commands to make your life easier Share This Story shop @Bullet", Jan. 21, 2016, https://bgr.com/2016/01/21/best-ok-google-voice-commands/, 3 page.
Ullrich et al. "Soft Weight-Sharing for Neural Network Compression." ICLR 2017, 16 pages.
U.S. Appl. No. 60/490,768, filed Jul. 28, 2003, entitled "Method for synchronizing audio playback between multiple networked devices," 13 pages.
U.S. Appl. No. 60/825,407, filed Sep. 12, 2006, entitled "Controlling and manipulating groupings in a multi-zone music or media system," 82 pages.
UPnP; "Universal Plug and Play Device Architecture," Jun. 8, 2000; version 1.0; Microsoft Corporation; pp. 1-54.
Vacher at al. "Recognition of voice commands by multisource ASR and noise cancellation in a smart home environment" Signal Processing Conference 2012 Proceedings of the 20th European, IEEE, Aug. 27, 2012, 5 pages.
Vacher et al. "Speech Recognition in a Smart Home: Some Experiments for Telemonitoring," 2009 Proceedings of the 5th Conference on Speech Technology and Human-Computer Dialogoue, Constant, 2009, 10 pages.
"S Voice or Google Now?"; https://web.archive.org/web/20160807040123/lowdown.carphonewarehouse.com/news/s-voice-or-google-now/ . . . , Apr. 28, 2015; 4 pages.
Wen et al. A Network-based End-to-End Trainable Task-oriented Dialogue System, Corr (ARXIV), Apr. 15, 2016, 11 pages.
Wu et al. End-to-End Recurrent Entity Network for Entity-Value Independent Goal-Oriented Dialog Learning. DSTC6—Dialog System Technology Challenges, Dec. 10, 2017, 5 pages.
Wung et al. "Robust Acoustic Echo Cancellation in the Short-Time Fourier Transform Domain Using Adaptive Crossband Filters" IEEE International Conference on Acoustic, Speech and Signal Processing ICASSP, 2014, p. 1300-1304.
Xiao et al. "A Learning-Based Approach to Direction of Arrival Estimation in Noisy and Reverberant Environments," 2015 IEEE International Conference on Acoustics, Speech and Signal Processing, Apr. 19, 2015, 5 pages.
Xiaoguang et al. "Robust Small-Footprint Keyword Spotting Using Sequence-To-Sequence Model with Connectionist Temporal Classifier", 2019 IEEE, Sep. 28, 2019, 5 pages.
Advisory Action mailed on Nov. 7, 2022, issued in connection with U.S. Appl. No. 16/168,389, filed Oct. 23, 2018, 4 pages.
Advisory Action mailed on Feb. 28, 2022, issued in connection with U.S. Appl. No. 16/813,643, filed Mar. 9, 2020, 3 pages.
Australian Patent Office, Australian Examination Report Action mailed on Nov. 10, 2022, issued in connection with Australian Application No. 2018312989, 2 pages.
Australian Patent Office, Australian Examination Report Action mailed on May 19, 2022, issued in connection with Australian Application No. 2021212112, 2 pages.
Australian Patent Office, Australian Examination Report Action mailed on Sep. 28, 2022, issued in connection with Australian Application No. 2018338812, 3 pages.
Australian Patent Office, Australian Examination Report Action mailed on Mar. 4, 2022, issued in connection with Australian Application No. 2021202786, 2 pages.
Canadian Patent Office, Canadian Examination Report mailed on Dec. 1, 2021, issued in connection with Canadian Application No. 3096442, 4 pages.
Canadian Patent Office, Canadian Examination Report mailed on Sep. 14, 2022, issued in connection with Canadian Application No. 3067776, 4 pages.
Canadian Patent Office, Canadian Examination Report mailed on Oct. 19, 2022, issued in connection with Canadian Application No. 3123601, 5 pages.
Canadian Patent Office, Canadian Examination Report mailed on Nov. 2, 2021, issued in connection with Canadian Application No. 3067776, 4 pages.
Canadian Patent Office, Canadian Examination Report mailed on Oct. 26, 2021, issued in connection with Canadian Application No. 3072492, 3 pages.
Canadian Patent Office, Canadian Examination Report mailed on Mar. 29, 2022, issued in connection with Canadian Application No. 3111322, 3 pages.
Canadian Patent Office, Canadian Examination Report mailed on Jun. 7, 2022, issued in connection with Canadian Application No. 3105494, 5 pages.
Chinese Patent Office, First Office Action and Translation mailed on Jun. 1, 2021, issued in connection with Chinese Application No. 201980089721.5, 21 pages.
Chinese Patent Office, First Office Action and Translation mailed on Feb. 9, 2023, issued in connection with Chinese Application No. 201880076788.0, 13 pages.
Chinese Patent Office, First Office Action and Translation mailed on Oct. 9, 2022, issued in connection with Chinese Application No. 201780056695.7, 10 pages.
Chinese Patent Office, First Office Action and Translation mailed on Dec. 1, 2021, issued in connection with Chinese Application No. 201780077204.7, 11 pages.
Chinese Patent Office, First Office Action and Translation mailed on Nov. 10, 2022, issued in connection with Chinese Application No. 201980070006.7, 15 pages.
Chinese Patent Office, First Office Action and Translation mailed on Jan. 19, 2023, issued in connection with Chinese Application No. 201880064916.X, 10 pages.
Chinese Patent Office, First Office Action and Translation mailed on Sep. 19, 2022, issued in connection with Chinese Application No. 201980056604.9, 13 pages.
Chinese Patent Office, First Office Action and Translation mailed on Dec. 20, 2021, issued in connection with Chinese Application No. 202010302650.7, 10 pages.
Chinese Patent Office, First Office Action and Translation mailed on Nov. 25, 2022, issued in connection with Chinese Application No. 201780056321.5, 8 pages.
Chinese Patent Office, First Office Action and Translation mailed on Feb. 27, 2023, issued in connection with Chinese Application No. 201980003798.6, 12 pages.
Chinese Patent Office, First Office Action and Translation mailed on Dec. 30, 2022, issued in connection with Chinese Application No. 201880076775.3, 10 pages.
Chinese Patent Office, Second Office Action and Translation mailed on Mar. 3, 2022, issued in connection with Chinese Application No. 201880077216.4, 11 pages.
Chinese Patent Office, Second Office Action and Translation mailed on Apr. 1, 2023, issued in connection with Chinese Application No. 201980056604.9, 11 pages.
Chinese Patent Office, Second Office Action mailed on Dec. 21, 2022, issued in connection with Chinese Application No. 201980089721.5, 12 pages.
European Patent Office, Decision to Refuse European Patent Application mailed on May 30, 2022, issued in connection with European Application No. 17200837.7, 4 pages.
European Patent Office, European EPC Article 94.3 mailed on Feb. 10, 2023, issued in connection with European Application No. 19729968.8, 7 pages.
European Patent Office, European EPC Article 94.3 mailed on Mar. 11, 2022, issued in connection with European Application No. 19731415.6, 7 pages.
European Patent Office, European EPC Article 94.3 mailed on Nov. 11, 2021, issued in connection with European Application No. 19784172.9, 5 pages.
European Patent Office, European EPC Article 94.3 mailed on May 2, 2022, issued in connection with European Application No. 20185599.6, 7 pages.
European Patent Office, European EPC Article 94.3 mailed on Jun. 21, 2022, issued in connection with European Application No. 19780508.8, 5 pages.

(56) **References Cited**

OTHER PUBLICATIONS

European Patent Office, European EPC Article 94.3 mailed on Feb. 23, 2023, issued in connection with European Application No. 19839734.1, 8 pages.
European Patent Office, European EPC Article 94.3 mailed on Nov. 28, 2022, issued in connection with European Application No. 18789515.6, 7 pages.
European Patent Office, European EPC Article 94.3 mailed on Mar. 3, 2022, issued in connection with European Application No. 19740292.8, 10 pages.
European Patent Office, European EPC Article 94.3 mailed on Jun. 30, 2022, issued in connection with European Application No. 19765953.5, 4 pages.
European Patent Office, European Extended Search Report mailed on Oct. 7, 2022, issued in connection with European Application No. 22182193.7, 8 pages.
European Patent Office, European Extended Search Report mailed on Apr. 22, 2022, issued in connection with European Application No. 21195031.6, 14 pages.
European Patent Office, European Extended Search Report mailed on Jun. 23, 2022, issued in connection with European Application No. 22153180.9, 6 pages.
European Patent Office, European Extended Search Report mailed on Jun. 30, 2022, issued in connection with European Application No. 21212763.3, 9 pages.
European Patent Office, European Extended Search Report mailed on Jul. 8, 2022, issued in connection with European Application No. 22153523.0, 9 pages.
European Patent Office, European Search Report mailed on Mar. 1, 2022, issued in connection with European Application No. 21180778.9, 9 pages.
European Patent Office, European Search Report mailed on Oct. 4, 2022, issued in connection with European Application No. 22180226.7, 6 pages.
European Patent Office, Summons to Attend Oral Proceedings mailed on Jul. 15, 2022, issued in connection with European Application No. 17792272.1, 11 pages.
European Patent Office, Summons to Attend Oral Proceedings mailed on Feb. 4, 2022, issued in connection with European Application No. 17757075.1, 10 pages.
European Patent Office, Summons to Attend Oral Proceedings mailed on Dec. 9, 2021, issued in connection with European Application No. 17200837.7, 10 pages.
Final Office Action mailed on Jun. 1, 2022, issued in connection with U.S. Appl. No. 16/806,747, filed Mar. 2, 2020, 20 pages.
Final Office Action mailed on Aug. 17, 2022, issued in connection with U.S. Appl. No. 16/179,779, filed Nov. 2, 2018, 26 pages.
Final Office Action mailed on Dec. 17, 2021, issued in connection with U.S. Appl. No. 16/813,643, filed Mar. 9, 2020, 12 pages.
Notice of Allowance mailed Aug. 2, 2021, issued in connection with U.S. Appl. No. 16/660,197, filed Oct. 22, 2019, 7 pages.
Notice of Allowance mailed Mar. 31, 2021, issued in connection with U.S. Appl. No. 16/813,643, filed Mar. 9, 2020, 11 pages.
Notice of Allowance mailed Aug. 4, 2021, issued in connection with U.S. Appl. No. 16/780,483, filed Feb. 3, 2020, 5 pages.
Notice of Allowance mailed on Dec. 2, 2019, issued in connection with U.S. Appl. No. 15/718,521, filed Sep. 28, 2017, 15 pages.
Notice of Allowance mailed on Dec. 4, 2017, issued in connection with U.S. Appl. No. 15/277,810, filed Sep. 27, 2016, 5 pages.
Notice of Allowance mailed on Jul. 5, 2018, issued in connection with U.S. Appl. No. 15/237,133, filed Aug. 15, 2016, 5 pages.
Notice of Allowance mailed on Jul. 9, 2018, issued in connection with U.S. Appl. No. 15/438,741, filed Feb. 21, 2017, 5 pages.
Notice of Allowance mailed on Apr. 1, 2019, issued in connection with U.S. Appl. No. 15/935,966, filed Mar. 26, 2018, 5 pages.
Notice of Allowance mailed on Aug. 1, 2018, issued in connection with U.S. Appl. No. 15/297,627, filed Oct. 19, 2016, 9 pages.
Notice of Allowance mailed on Jun. 1, 2021, issued in connection with U.S. Appl. No. 16/219,702, filed Dec. 13, 2018, 8 pages.
Notice of Allowance mailed on Jun. 1, 2021, issued in connection with U.S. Appl. No. 16/685,135, filed Nov. 15, 2019, 10 pages.
Notice of Allowance mailed on Sep. 1, 2021, issued in connection with U.S. Appl. No. 15/936,177, filed Mar. 26, 2018, 22 pages.
Notice of Allowance mailed on Aug. 10, 2020, issued in connection with U.S. Appl. No. 16/424,825, filed May 29, 2019, 9 pages.
Notice of Allowance mailed on Feb. 10, 2021, issued in connection with U.S. Appl. No. 16/138,111, filed Sep. 21, 2018, 8 pages.
Notice of Allowance mailed on Apr. 11, 2018, issued in connection with U.S. Appl. No. 15/719,454, filed Sep. 28, 2017, 15 pages.
Notice of Allowance mailed on Oct. 11, 2019, issued in connection with U.S. Appl. No. 16/437,476, filed Jun. 11, 2019, 9 pages.
Notice of Allowance mailed on Sep. 11, 2019, issued in connection with U.S. Appl. No. 16/154,071, filed Oct. 8, 2018, 5 pages.
Notice of Allowance mailed on Aug. 12, 2021, issued in connection with U.S. Appl. No. 16/819,755, filed Mar. 16, 2020, 6 pages.
Notice of Allowance mailed on Dec. 12, 2018, issued in connection with U.S. Appl. No. 15/811,468, filed Nov. 13, 2017, 9 pages.
Notice of Allowance mailed on Jul. 12, 2017, issued in connection with U.S. Appl. No. 15/098,805, filed Apr. 14, 2016, 8 pages.
Notice of Allowance mailed on Jun. 12, 2019, issued in connection with U.S. Appl. No. 15/670,361, filed Aug. 7, 2017, 7 pages.
Notice of Allowance mailed on May 12, 2021, issued in connection with U.S. Appl. No. 16/402,617, filed May 3, 2019, 8 pages.
Notice of Allowance mailed on Sep. 12, 2018, issued in connection with U.S. Appl. No. 15/438,744, filed Feb. 21, 2017, 15 pages.
Notice of Allowance mailed on Dec. 13, 2017, issued in connection with U.S. Appl. No. 15/784,952, filed Oct. 16, 2017, 9 pages.
Notice of Allowance mailed on Feb. 13, 2019, issued in connection with U.S. Appl. No. 15/959,907, filed Apr. 23, 2018, 10 pages.
Notice of Allowance mailed on Jan. 13, 2020, issued in connection with U.S. Appl. No. 16/192,126, filed Nov. 15, 2018, 6 pages.
Notice of Allowance mailed on Jan. 13, 2021, issued in connection with U.S. Appl. No. 16/539,843, filed Aug. 13, 2019, 5 pages.
Notice of Allowance mailed on Nov. 13, 2020, issued in connection with U.S. Appl. No. 16/131,409, filed Sep. 14, 2018, 11 pages.
Notice of Allowance mailed on Aug. 14, 2017, issued in connection with U.S. Appl. No. 15/098,867, filed Apr. 14, 2016, 10 pages.
Notice of Allowance mailed on Aug. 14, 2020, issued in connection with U.S. Appl. No. 16/598,125, filed Oct. 10, 2019, 5 pages.
Notice of Allowance mailed on Feb. 14, 2017, issued in connection with U.S. Appl. No. 15/229,855, filed Aug. 5, 2016, 11 pages.
Notice of Allowance mailed on Jan. 14, 2021, issued in connection with U.S. Appl. No. 17/087,423, filed Nov. 2, 2020, 8 pages.
Notice of Allowance mailed on Jun. 14, 2017, issued in connection with U.S. Appl. No. 15/282,554, filed Sep. 30, 2016, 11 pages.
Notice of Allowance mailed on Nov. 14, 2018, issued in connection with U.S. Appl. No. 15/297,627, filed Oct. 19, 2016, 5 pages.
Notice of Allowance mailed on Dec. 15, 2017, issued in connection with U.S. Appl. No. 15/223,218, filed Jul. 29, 2016, 7 pages.
Notice of Allowance mailed on Jan. 15, 2020, issued in connection with U.S. Appl. No. 16/439,009, filed Jun. 12, 2019, 9 pages.
Notice of Allowance mailed on Mar. 15, 2019, issued in connection with U.S. Appl. No. 15/804,776, filed Nov. 6, 2017, 9 pages.
Notice of Allowance mailed on Oct. 15, 2019, issued in connection with U.S. Appl. No. 16/437,437, filed Jun. 11, 2019, 9 pages.
Notice of Allowance mailed on Oct. 15, 2020, issued in connection with U.S. Appl. No. 16/715,713, filed Dec. 16, 2019, 9 pages.
Notice of Allowance mailed on Oct. 15, 2021, issued in connection with U.S. Appl. No. 16/213,570, filed Dec. 7, 2018, 8 pages.
Notice of Allowance mailed on Sep. 15, 2021, issued in connection with U.S. Appl. No. 16/685,135, filed Nov. 15, 2019, 10 pages.
Notice of Allowance mailed on Apr. 16, 2021, issued in connection with U.S. Appl. No. 16/798,967, filed Feb. 24, 2020, 16 pages.
Notice of Allowance mailed on Aug. 16, 2017, issued in connection with U.S. Appl. No. 15/098,892, filed Apr. 14, 2016, 9 pages.
Notice of Allowance mailed on Aug. 17, 2017, issued in connection with U.S. Appl. No. 15/131,244, filed Apr. 18, 2016, 9 pages.
Notice of Allowance mailed on Feb. 17, 2021, issued in connection with U.S. Appl. No. 16/715,984, filed Dec. 16, 2019, 8 pages.
Notice of Allowance mailed on Jul. 17, 2019, issued in connection with U.S. Appl. No. 15/718,911, filed Sep. 28, 2017, 5 pages.

(56) **References Cited**

OTHER PUBLICATIONS

Notice of Allowance mailed on Jun. 17, 2020, issued in connection with U.S. Appl. No. 16/141,875, filed Sep. 25, 2018, 6 pages.
Notice of Allowance mailed on Sep. 17, 2018, issued in connection with U.S. Appl. No. 15/211,689, filed Jul. 15, 2016, 6 pages.
Notice of Allowance mailed on Apr. 18, 2019, issued in connection with U.S. Appl. No. 16/173,797, filed Oct. 29, 2018, 9 pages.
Notice of Allowance mailed on Dec. 18, 2019, issued in connection with U.S. Appl. No. 16/434,426, filed Jun. 7, 2019, 13 pages.
Advisory Action mailed on Jun. 10, 2020, issued in connection with U.S. Appl. No. 15/936,177, filed Mar. 26, 2018, 4 pages.
Advisory Action mailed on Aug. 13, 2021, issued in connection with U.S. Appl. No. 16/271,550, filed Feb. 8, 2019, 4 pages.
Advisory Action mailed on Apr. 23, 2021, issued in connection with U.S. Appl. No. 16/219,702, filed Dec. 13, 2018, 3 pages.
Advisory Action mailed on Apr. 24, 2020, issued in connection with U.S. Appl. No. 15/948,541, filed Apr. 9, 2018, 4 pages.
Advisory Action mailed on Jun. 28, 2018, issued in connection with U.S. Appl. No. 15/438,744, filed Feb. 21, 2017, 3 pages.
Advisory Action mailed on Dec. 31, 2018, issued in connection with U.S. Appl. No. 15/804,776, filed Nov. 6, 2017, 4 pages.
Advisory Action mailed on Sep. 8, 2021, issued in connection with U.S. Appl. No. 16/168,389, filed Oct. 23, 2018, 4 pages.
Advisory Action mailed on Jun. 9, 2020, issued in connection with U.S. Appl. No. 16/145,275, filed Sep. 28, 2018, 3 pages.
Andra et al. Contextual Keyword Spotting in Lecture Video With Deep Convolutional Neural Network. 2017 International Conference on Advanced Computer Science and Information Systems, IEEE, Oct. 28, 2017, 6 pages.
Anonymous,. S Voice or Google Now—The Lowdown. Apr. 28, 2015, 9 pages. [online], [retrieved on Nov. 29, 2017]. Retrieved from the Internet (URL:http://web.archive.org/web/20160807040123/http://lowdown.carphonewarehouse.com/news/s-voice-or-google-now/29958/).
Anonymous: "What are the function of 4 Microphones on iPhone 6S/6S+?", ETrade Supply, Dec. 24, 2015, XP055646381, Retrieved from the Internet: URL:https://www.etradesupply.com/blog/4-microphones-iphone-6s6s-for/ [retrieved on Nov. 26, 2019].
Audhkhasi Kartik et al. End-to-end ASR-free keyword search from speech. 2017 IEEE International Conference on Acoustics, Speech and Signal Processing, Mar. 5, 2017, 7 pages.
AudioTron Quick Start Guide, Version 1.0, Mar. 2001, 24 pages.
AudioTron Reference Manual, Version 3.0, May 2002, 70 pages.
AudioTron Setup Guide, Version 3.0, May 2002, 38 pages.
Australian Patent Office, Australian Examination Report Action mailed on Apr. 14, 2020, issued in connection with Australian Application No. 2019202257, 3 pages.
Australian Patent Office, Australian Examination Report Action mailed on Oct. 3, 2019, issued in connection with Australian Application No. 2018230932, 3 pages.
Australian Patent Office, Australian Examination Report Action mailed on Apr. 7, 2021, issued in connection with Australian Application No. 2019333058, 2 pages.
Australian Patent Office, Australian Examination Report Action mailed on Aug. 7, 2020, issued in connection with Australian Application No. 2019236722, 4 pages.
Australian Patent Office, Examination Report mailed on Jun. 28, 2021, issued in connection with Australian Patent Application No. 2019395022, 2 pages.
Australian Patent Office, Examination Report mailed on Oct. 30, 2018, issued in connection with Australian Application No. 2017222436, 3 pages.
"Automatic Parameter Tying in Neural Networks" ICLR 2018, 14 pages.
Bertrand et al. "Adaptive Distributed Noise Reduction for Speech Enhancement in Wireless Acoustic Sensor Networks" Jan. 2010, 4 pages.
Bluetooth. "Specification of the Bluetooth System: The ad hoc Scatternet for affordable and highly functional wireless connectivity," Core, Version 1.0 A, Jul. 26, 1999, 1068 pages.
Bluetooth. "Specification of the Bluetooth System: Wireless connections made easy," Core, Version 1.0 B, Dec. 1, 1999, 1076 pages.
Canadian Patent Office, Canadian Examination Report mailed on Mar. 9, 2021, issued in connection with Canadian Application No. 3067776, 5 pages.
Canadian Patent Office, Canadian Office Action mailed on Nov. 14, 2018, issued in connection with Canadian Application No. 3015491, 3 pages.
Chinese Patent Office, Chinese Office Action and Translation mailed on Jul. 2, 2021, issued in connection with Chinese Application No. 201880077216.4, 22 pages.
Chinese Patent Office, Chinese Office Action and Translation mailed on Mar. 30, 2021, issued in connection with Chinese Application No. 202010302650.7, 15 pages.
Chinese Patent Office, First Office Action and Translation mailed on Mar. 20, 2019, issued in connection with Chinese Application No. 201780025028.2, 18 pages.
Chinese Patent Office, First Office Action and Translation mailed on Mar. 27, 2019, issued in connection with Chinese Application No. 201780025029.7, 9 pages.
Chinese Patent Office, First Office Action and Translation mailed on May 27, 2021, issued in connection with Chinese Application No. 201880026360.5, 15 pages.
Chinese Patent Office, First Office Action and Translation mailed on Dec. 28, 2020, issued in connection with Chinese Application No. 201880072203.8, 11 pages.
Chinese Patent Office, First Office Action and Translation mailed on Nov. 5, 2019, issued in connection with Chinese Application No. 201780072651.3, 19 pages.
Chinese Patent Office, First Office Action mailed on Feb. 28, 2020, issued in connection with Chinese Application No. 201780061543.6, 29 pages.
Chinese Patent Office, Second Office Action and Translation mailed on May 11, 2020, issued in connection with Chinese Application No. 201780061543.6, 17 pages.
Chinese Patent Office, Second Office Action and Translation mailed on Jul. 18, 2019, issued in connection with Chinese Application No. 201780025029.7, 14 pages.
Chinese Patent Office, Second Office Action and Translation mailed on Sep. 23, 2019, issued in connection with Chinese Application No. 201780025028.2, 15 pages.
Chinese Patent Office, Second Office Action and Translation mailed on Mar. 31, 2020, issued in connection with Chinese Application No. 201780072651.3, 17 pages.
Chinese Patent Office, Third Office Action and Translation mailed on Sep. 16, 2019, issued in connection with Chinese Application No. 201780025029.7, 14 pages.
Chinese Patent Office, Third Office Action and Translation mailed on Aug. 5, 2020, issued in connection with Chinese Application No. 201780072651.3, 10 pages.
Chinese Patent Office, Translation of Office Action mailed on Jul. 18, 2019, issued in connection with Chinese Application No. 201780025029.7, 8 pages.
Chung et al. Empirical Evaluation of Gated Recurrent Neural Network on Sequence Modeling. Dec. 11, 2014, 9 pages.
Cipriani,. The complete list of OK, Google commands—CNET. Jul. 1, 2016, 5 pages. [online], [retrieved on Jan. 15, 2020]. Retrieved from the Internet: (URL:https://web.archive.org/web/20160803230926/https://www.cnet.com/how-to/complete-list-of-ok-google--commands/).
Corrected Notice of Allowability mailed on Mar. 8, 2017, issued in connection with U.S. Appl. No. 15/229,855, filed Aug. 5, 2016, 6 pages.
Couke et al. Efficient Keyword Spotting using Dilated Convolutions and Gating, arXiv:1811.07684v2, Feb. 18, 2019, 5 pages.
Dell, Inc. "Dell Digital Audio Receiver: Reference Guide," Jun. 2000, 70 pages.
Dell, Inc. "Start Here," Jun. 2000, 2 pages.
"Denon 2003-2004 Product Catalog," Denon, 2003-2004, 44 pages.
European Patent Office, European EPC Article 94.3 mailed on Feb. 23, 2021, issued in connection with European Application No. 17200837.7, 8 pages.

(56) **References Cited**

OTHER PUBLICATIONS

European Patent Office, European EPC Article 94.3 mailed on Feb. 26, 2021, issued in connection with European Application No. 18789515.6, 8 pages.
European Patent Office, European Extended Search Report mailed on Oct. 7, 2021, issued in connection with European Application No. 21193616.6, 9 pages.
European Patent Office, European Extended Search Report mailed on Nov. 25, 2020, issued in connection with European Application No. 20185599.6, 9 pages.
European Patent Office, European Extended Search Report mailed on Feb. 3, 2020, issued in connection with European Application No. 19197116.7, 9 pages.
European Patent Office, European Extended Search Report mailed on Jan. 3, 2019, issued in connection with European Application No. 177570702, 8 pages.
European Patent Office, European Extended Search Report mailed on Jan. 3, 2019, issued in connection with European Application No. 17757075.1, 9 pages.
European Patent Office, European Extended Search Report mailed on Oct. 30, 2017, issued in connection with EP Application No. 17174435.2, 11 pages.
European Patent Office, European Extended Search Report mailed on Aug. 6, 2020, issued in connection with European Application No. 20166332.5, 10 pages.
European Patent Office, European Office Action mailed on Jul. 1, 2020, issued in connection with European Application No. 17757075.1, 7 pages.
European Patent Office, European Office Action mailed on Jan. 14, 2020, issued in connection with European Application No. 17757070.2, 7 pages.
European Patent Office, European Office Action mailed on Jan. 21, 2021, issued in connection with European Application No. 17792272.1, 7 pages.
European Patent Office, European Office Action mailed on Jan. 22, 2019, issued in connection with European Application No. 17174435.2, 9 pages.
European Patent Office, European Office Action mailed on Sep. 23, 2020, issued in connection with European Application No. 18788976.1, 7 pages.
European Patent Office, European Office Action mailed on Oct. 26, 2020, issued in connection with European Application No. 18760101.8, 4 pages.
European Patent Office, European Office Action mailed on Aug. 30, 2019, issued in connection with European Application No. 17781608.9, 6 pages.
European Patent Office, European Office Action mailed on Sep. 9, 2020, issued in connection with European Application No. 18792656.3, 10 pages.
European Patent Office, Examination Report mailed on Jul. 15, 2021, issued in connection with European Patent Application No. 19729968.8, 7 pages.
European Patent Office, Extended Search Report mailed on Aug. 13, 2021, issued in connection with European Patent Application No. 21164130.3, 11 pages.
European Patent Office, Extended Search Report mailed on May 16, 2018, issued in connection with European Patent Application No. 17200837.7, 11 pages.
European Patent Office, Extended Search Report mailed on Jul. 25, 2019, issued in connection with European Patent Application No. 18306501.0, 14 pages.
European Patent Office, Extended Search Report mailed on May 29, 2020, issued in connection with European Patent Application No. 19209389.6, 8 pages.
European Patent Office, Summons to Attend Oral Proceedings mailed on Dec. 20, 2019, issued in connection with European Application No. 17174435.2, 13 pages.
Fadilpasic, "Cortana can now be the default PDA on your Android", IT Pro Portal: Accessed via WayBack Machine; http:/web.archive.org/web/20171129124915/https://www.itproportal.com/2015/08/11/cortana-can-now-be- . . . , Aug. 11, 2015, 6 pages.
Final Office Action mailed Jul. 23, 2021, issued in connection with U.S. Appl. No. 16/439,046, filed Jun. 12, 2019, 12 pages.
Final Office Action mailed on Oct. 6, 2017, issued in connection with U.S. Appl. No. 15/098,760, filed Apr. 14, 2016, 25 pages.
Final Office Action mailed on Feb. 10, 2021, issued in connection with U.S. Appl. No. 16/219,702, filed Dec. 13, 2018, 9 pages.
Final Office Action mailed on Feb. 10, 2021, issued in connection with U.S. Appl. No. 16/402,617, filed May 3, 2019, 13 pages.
Final Office Action mailed on Nov. 10, 2020, issued in connection with U.S. Appl. No. 16/600,644, filed Oct. 14, 2019, 19 pages.
Final Office Action mailed on Apr. 11, 2019, issued in connection with U.S. Appl. No. 15/131,254, filed Apr. 18, 2016, 17 pages.
Final Office Action mailed on Aug. 11, 2017, issued in connection with U.S. Appl. No. 15/131,776, filed Apr. 18, 2016, 7 pages.
Final Office Action mailed on Dec. 11, 2019, issued in connection with U.S. Appl. No. 16/227,308, filed Dec. 20, 2018, 10 pages.
Final Office Action mailed on Sep. 11, 2019, issued in connection with U.S. Appl. No. 16/178,122, filed Nov. 1, 2018, 13 pages.
Final Office Action mailed on Apr. 13, 2018, issued in connection with U.S. Appl. No. 15/131,254, filed Apr. 18, 2016, 18 pages.
Final Office Action mailed on Apr. 13, 2018, issued in connection with U.S. Appl. No. 15/438,744, filed Feb. 21, 2017, 20 pages.
Final Office Action mailed on May 13, 2020, issued in connection with U.S. Appl. No. 16/153,530, filed Oct. 5, 2018, 20 pages.
Final Office Action mailed on Jul. 15, 2021, issued in connection with U.S. Appl. No. 16/153,530, filed Oct. 5, 2018, 22 pages.
Final Office Action mailed on Jun. 15, 2017, issued in connection with U.S. Appl. No. 15/098,718, filed Apr. 14, 2016, 15 pages.
Final Office Action mailed on Jun. 15, 2021, issued in connection with U.S. Appl. No. 16/819,755, filed Mar. 16, 2020, 12 pages.
Final Office Action mailed on Oct. 15, 2018, issued in connection with U.S. Appl. No. 15/804,776, filed Nov. 6, 2017, 18 pages.
Final Office Action mailed on Oct. 15, 2020, issued in connection with U.S. Appl. No. 16/109,375, filed Aug. 22, 2018, 9 pages.
Final Office Action mailed on Oct. 16, 2018, issued in connection with U.S. Appl. No. 15/438,725, filed Feb. 21, 2017, 10 pages.
Final Office Action mailed on May 18, 2020, issued in connection with U.S. Appl. No. 16/177,185, filed Oct. 31, 2018, 16 pages.
Final Office Action mailed on Feb. 21, 2018, issued in connection with U.S. Appl. No. 15/297,627, filed Oct. 19, 2016, 12 pages.
Final Office Action mailed on May 21, 2020, issued in connection with U.S. Appl. No. 15/989,715, filed May 25, 2018, 21 pages.
Final Office Action mailed on Feb. 22, 2021, issued in connection with U.S. Appl. No. 15/936,177, filed Mar. 26, 2018, 20 pages.
Final Office Action mailed on Feb. 22, 2021, issued in connection with U.S. Appl. No. 16/213,570, filed Dec. 7, 2018, 12 pages.
Final Office Action mailed on Jun. 22, 2020, issued in connection with U.S. Appl. No. 16/179,779, filed Nov. 2, 2018, 16 pages.
Final Office Action mailed on Mar. 23, 2020, issued in connection with U.S. Appl. No. 16/145,275, filed Sep. 28, 2018, 11 pages.
Final Office Action mailed on Feb. 24, 2020, issued in connection with U.S. Appl. No. 15/936,177, filed Mar. 26, 2018, 20 pages.
Final Office Action mailed on Apr. 26, 2019, issued in connection with U.S. Appl. No. 15/721,141, filed Sep. 29, 2017, 20 pages.
Non-Final Office Action mailed on Feb. 27, 2023, issued in connection with U.S. Appl. No. 17/493,430, filed Oct. 4, 2021, 17 pages.
Non-Final Office Action mailed on Feb. 28, 2023, issued in connection with U.S. Appl. No. 17/548,921, filed Dec. 13, 2021, 12 pages.
Non-Final Office Action mailed on Mar. 28, 2022, issued in connection with U.S. Appl. No. 17/222,151, filed Apr. 5, 2021, 5 pages.
Non-Final Office Action mailed on Nov. 29, 2021, issued in connection with U.S. Appl. No. 16/989,350, filed Aug. 10, 2020, 15 pages.
Non-Final Office Action mailed on Sep. 30, 2022, issued in connection with U.S. Appl. No. 17/353,254, filed Jun. 21, 2021, 22 pages.
Non-Final Office Action mailed on Jan. 4, 2022, issued in connection with U.S. Appl. No. 16/879,549, filed May 20, 2020, 14 pages.

(56) **References Cited**

OTHER PUBLICATIONS

Non-Final Office Action mailed on Nov. 4, 2022, issued in connection with U.S. Appl. No. 17/445,272, filed Aug. 17, 2021, 22 pages.
Non-Final Office Action mailed on Oct. 4, 2022, issued in connection with U.S. Appl. No. 16/915,234, filed Jun. 29, 2020, 16 pages.
Non-Final Office Action mailed on Apr. 5, 2023, issued in connection with U.S. Appl. No. 18/145,501, filed Dec. 22, 2022, 6 pages.
Non-Final Office Action mailed on Nov. 5, 2021, issued in connection with U.S. Appl. No. 16/153,530, filed Oct. 5, 2018, 21 pages.
Non-Final Office Action mailed on Dec. 7, 2021, issued in connection with U.S. Appl. No. 16/168,389, filed Oct. 23, 2018, 36 pages.
Non-Final Office Action mailed on Feb. 7, 2023, issued in connection with U.S. Appl. No. 17/303,001, filed May 18, 2021, 8 pages.
Non-Final Office Action mailed on Jan. 7, 2022, issued in connection with U.S. Appl. No. 17/135,123, filed Dec. 28, 2020, 16 pages.
Non-Final Office Action mailed on Mar. 7, 2022, issued in connection with U.S. Appl. No. 16/812,758, filed Mar. 9, 2020, 18 pages.
Non-Final Office Action mailed on Feb. 8, 2022, issued in connection with U.S. Appl. No. 16/806,747, filed Mar. 2, 2020, 17 pages.
Notice of Allowance mailed on Nov. 2, 2022, issued in connection with U.S. Appl. No. 16/989,805, filed Aug. 10, 2020, 5 pages.
Notice of Allowance mailed on Nov. 3, 2022, issued in connection with U.S. Appl. No. 17/448,015, filed Sep. 17, 2021, 7 pages.
Notice of Allowance mailed on Feb. 6, 2023, issued in connection with U.S. Appl. No. 17/077,974, filed Oct. 22, 2020, 7 pages.
Notice of Allowance mailed on Jan. 6, 2023, issued in connection with U.S. Appl. No. 17/896,129, filed Aug. 26, 2022, 13 pages.
Notice of Allowance mailed on Dec. 7, 2022, issued in connection with U.S. Appl. No. 17/315,599, filed May 10, 2021, 11 pages.
Notice of Allowance mailed on Feb. 8, 2023, issued in connection with U.S. Appl. No. 17/446,690, filed Sep. 1, 2021, 8 pages.
Notice of Allowance mailed on Jan. 9, 2023, issued in connection with U.S. Appl. No. 17/247,507, filed Dec. 14, 2020, 8 pages.
Notice of Allowance mailed on Mar. 9, 2023, issued in connection with U.S. Appl. No. 17/662,302, filed May 6, 2022, 7 pages.
Notice of Allowance mailed on Nov. 9, 2022, issued in connection with U.S. Appl. No. 17/385,542, filed Jul. 26, 2021, 8 pages.
Notice of Allowance mailed on Feb. 1, 2022, issued in connection with U.S. Appl. No. 16/439,046, filed Jun. 12, 2019, 9 pages.
Notice of Allowance mailed on Mar. 1, 2022, issued in connection with U.S. Appl. No. 16/879,549, filed May 20, 2020, 9 pages.
Notice of Allowance mailed on Jun. 10, 2022, issued in connection with U.S. Appl. No. 16/879,549, filed May 20, 2020, 8 pages.
Notice of Allowance mailed on May 11, 2022, issued in connection with U.S. Appl. No. 17/135,123, filed Dec. 28, 2020, 8 pages.
Notice of Allowance mailed on May 11, 2022, issued in connection with U.S. Appl. No. 17/145,667, filed Jan. 11, 2021, 7 pages.
Notice of Allowance mailed on Jul. 12, 2022, issued in connection with U.S. Appl. No. 16/907,953, filed Jun. 22, 2020, 8 pages.
Notice of Allowance mailed on Jul. 12, 2022, issued in connection with U.S. Appl. No. 17/391,404, filed Aug. 2, 2021, 13 pages.
Notice of Allowance mailed on Apr. 13, 2022, issued in connection with U.S. Appl. No. 17/236,559, filed Apr. 21, 2021, 7 pages.
Notice of Allowance mailed on Dec. 13, 2021, issued in connection with U.S. Appl. No. 16/879,553, filed May 20, 2020, 15 pages.
Notice of Allowance mailed on Feb. 13, 2023, issued in connection with U.S. Appl. No. 18/045,360, filed Oct. 10, 2022, 9 pages.
Notice of Allowance mailed on Jan. 14, 2022, issued in connection with U.S. Appl. No. 16/966,397, filed Jul. 30, 2020, 5 pages.
Notice of Allowance mailed on Aug. 15, 2022, issued in connection with U.S. Appl. No. 17/101,949, filed Nov. 23, 2020, 11 pages.
Notice of Allowance mailed on Feb. 15, 2023, issued in connection with U.S. Appl. No. 17/659,613, filed Apr. 18, 2022, 21 pages.
Notice of Allowance mailed on Sep. 15, 2022, issued in connection with U.S. Appl. No. 16/736,725, filed Jan. 1, 2020, 11 pages.
Notice of Allowance mailed on Aug. 17, 2022, issued in connection with U.S. Appl. No. 17/135,347, filed Dec. 28, 2020, 14 pages.
Notice of Allowance mailed on Nov. 17, 2022, issued in connection with U.S. Appl. No. 17/486,222, filed Sep. 27, 2021, 10 pages.
Notice of Allowance mailed on Jul. 18, 2022, issued in connection with U.S. Appl. No. 17/222,151, filed Apr. 5, 2021, 5 pages.
Notice of Allowance mailed on Dec. 2, 2021, issued in connection with U.S. Appl. No. 16/841,116, filed Apr. 6, 2020, 5 pages.
Notice of Allowance mailed on Dec. 20, 2022, issued in connection with U.S. Appl. No. 16/806,747, filed Mar. 2, 2020, 5 pages.
Notice of Allowance mailed on Jan. 20, 2023, issued in connection with U.S. Appl. No. 16/915,234, filed Jun. 29, 2020, 6 pages.
Notice of Allowance mailed on Jun. 20, 2022, issued in connection with U.S. Appl. No. 16/947,895, filed Aug. 24, 2020, 7 pages.
Notice of Allowance mailed on Mar. 20, 2023, issued in connection with U.S. Appl. No. 17/562,412, filed Dec. 27, 2021, 9 pages.
Notice of Allowance mailed on Dec. 21, 2021, issued in connection with U.S. Appl. No. 16/271,550, filed Feb. 8, 2019, 11 pages.
Notice of Allowance mailed on Mar. 21, 2023, issued in connection with U.S. Appl. No. 17/353,254, filed Jun. 21, 2021, 8 pages.
Notice of Allowance mailed on Nov. 21, 2022, issued in connection with U.S. Appl. No. 17/454,676, filed Nov. 12, 2021, 8 pages.
Notice of Allowance mailed on Feb. 18, 2020, issued in connection with U.S. Appl. No. 16/022,662, filed Jun. 28, 2018, 8 pages.
Notice of Allowance mailed on Jul. 18, 2019, issued in connection with U.S. Appl. No. 15/438,749, filed Feb. 21, 2017, 9 pages.
Notice of Allowance mailed on Jul. 18, 2019, issued in connection with U.S. Appl. No. 15/721,141, filed Sep. 29, 2017, 8 pages.
Notice of Allowance mailed on Mar. 18, 2021, issued in connection with U.S. Appl. No. 16/177,185, filed Oct. 31, 2018, 8 pages.
Notice of Allowance mailed on Aug. 19, 2020, issued in connection with U.S. Appl. No. 16/271,560, filed Feb. 8, 2019, 9 pages.
Notice of Allowance mailed on Dec. 19, 2018, issued in connection with U.S. Appl. No. 15/818,051, filed Nov. 20, 2017, 9 pages.
Notice of Allowance mailed on Jul. 19, 2018, issued in connection with U.S. Appl. No. 15/681,937, filed Aug. 21, 2017, 7 pages.
Notice of Allowance mailed on Mar. 19, 2021, issued in connection with U.S. Appl. No. 17/157,686, filed Jan. 25, 2021, 11 pages.
Notice of Allowance mailed on Aug. 2, 2019, issued in connection with U.S. Appl. No. 16/102,650, filed Aug. 13, 2018, 5 pages.
Notice of Allowance mailed on Dec. 2, 2020, issued in connection with U.S. Appl. No. 15/989,715, filed May 25, 2018, 11 pages.
Notice of Allowance mailed on Sep. 2, 2020, issued in connection with U.S. Appl. No. 16/214,711, filed Dec. 10, 2018, 9 pages.
Notice of Allowance mailed on Jul. 20, 2020, issued in connection with U.S. Appl. No. 15/984,073, filed May 18, 2018, 12 pages.
Notice of Allowance mailed on Mar. 20, 2018, issued in connection with U.S. Appl. No. 15/784,952, filed Oct. 16, 2017, 7 pages.
Notice of Allowance mailed on Oct. 20, 2021, issued in connection with U.S. Appl. No. 16/439,032, filed Jun. 12, 2019, 8 pages.
Notice of Allowance mailed on Sep. 20, 2018, issued in connection with U.S. Appl. No. 15/946,599, filed Apr. 5, 2018, 7 pages.
Notice of Allowance mailed on Apr. 21, 2021, issued in connection with U.S. Appl. No. 16/145,275, filed Sep. 28, 2018, 8 pages.
Notice of Allowance mailed on Feb. 21, 2020, issued in connection with U.S. Appl. No. 16/416,752, filed May 20, 2019, 6 pages.
Notice of Allowance mailed on Jan. 21, 2020, issued in connection with U.S. Appl. No. 16/672,764, filed Nov. 4, 2019, 10 pages.
Notice of Allowance mailed on Jan. 21, 2021, issued in connection with U.S. Appl. No. 16/600,644, filed Oct. 14, 2019, 7 pages.
Notice of Allowance mailed on Oct. 21, 2019, issued in connection with U.S. Appl. No. 15/946,585, filed Apr. 5, 2018, 5 pages.
Notice of Allowance mailed on Aug. 22, 2017, issued in connection with U.S. Appl. No. 15/273,679, filed Sep. 22, 2016, 5 pages.
Notice of Allowance mailed on Jan. 22, 2018, issued in connection with U.S. Appl. No. 15/178,180, filed Jun. 9, 2016, 9 pages.
Notice of Allowance mailed on Jul. 22, 2020, issued in connection with U.S. Appl. No. 16/131,409, filed Sep. 14, 2018, 13 pages.
Notice of Allowance mailed on Jul. 22, 2020, issued in connection with U.S. Appl. No. 16/790,621, filed Feb. 13, 2020, 10 pages.
Notice of Allowance mailed on Aug. 23, 2021, issued in connection with U.S. Appl. No. 16/109,375, filed Aug. 22, 2018, 10 pages.
Notice of Allowance mailed on Jun. 23, 2021, issued in connection with U.S. Appl. No. 16/814,844, filed Mar. 10, 2020, 8 pages.
Notice of Allowance mailed on Apr. 24, 2019, issued in connection with U.S. Appl. No. 16/154,469, filed Oct. 8, 2018, 5 pages.

(56) **References Cited**

OTHER PUBLICATIONS

Notice of Allowance mailed on Oct. 25, 2021, issued in connection with U.S. Appl. No. 16/723,909, filed Dec. 20, 2019, 11 pages.
Notice of Allowance mailed on Aug. 26, 2020, issued in connection with U.S. Appl. No. 15/948,541, filed Apr. 9, 2018, 9 pages.
Notice of Allowance mailed on May 26, 2021, issued in connection with U.S. Appl. No. 16/927,670, filed Jul. 13, 2020, 10 pages.
Notice of Allowance mailed on Apr. 27, 2020, issued in connection with U.S. Appl. No. 16/700,607, filed Dec. 2, 2019, 10 pages.
Notice of Allowance mailed on Mar. 27, 2019, issued in connection with U.S. Appl. No. 16/214,666, filed Dec. 10, 2018, 6 pages.
Notice of Allowance mailed on Mar. 28, 2018, issued in connection with U.S. Appl. No. 15/699,982, filed Sep. 8, 2017, 17 pages.
Notice of Allowance mailed on May 28, 2021, issued in connection with U.S. Appl. No. 16/524,306, filed Jul. 29, 2019, 9 pages.
Notice of Allowance mailed on Dec. 29, 2017, issued in connection with U.S. Appl. No. 15/131,776, filed Apr. 18, 2016, 13 pages.
Notice of Allowance mailed on Jan. 29, 2021, issued in connection with U.S. Appl. No. 16/290,599, filed Mar. 1, 2019, 9 pages.
Notice of Allowance mailed on Jun. 29, 2020, issued in connection with U.S. Appl. No. 16/216,357, filed Dec. 11, 2018, 8 pages.
Notice of Allowance mailed on Mar. 29, 2021, issued in connection with U.S. Appl. No. 16/600,949, filed Oct. 14, 2019, 9 pages.
Notice of Allowance mailed on May 29, 2020, issued in connection with U.S. Appl. No. 16/148,879, filed Oct. 1, 2018, 6 pages.
Notice of Allowance mailed on Sep. 29, 2021, issued in connection with U.S. Appl. No. 16/876,493, filed May 18, 2020, 5 pages.
Notice of Allowance mailed on Apr. 3, 2019, issued in connection with U.S. Appl. No. 16/160,107, filed Oct. 15, 2018, 7 pages.
Notice of Allowance mailed on Jun. 3, 2021, issued in connection with U.S. Appl. No. 16/876,493, filed May 18, 2020, 7 pages.
Notice of Allowance mailed on Jul. 30, 2018, issued in connection with U.S. Appl. No. 15/098,718, filed Apr. 14, 2016, 5 pages.
Notice of Allowance mailed on Jul. 30, 2019, issued in connection with U.S. Appl. No. 15/131,254, filed Apr. 18, 2016, 9 pages.
Notice of Allowance mailed on Mar. 30, 2020, issued in connection with U.S. Appl. No. 15/973,413, filed May 7, 2018, 5 pages.
Notice of Allowance mailed on Nov. 30, 2018, issued in connection with U.S. Appl. No. 15/438,725, filed Feb. 21, 2017, 5 pages.
Notice of Allowance mailed on Oct. 30, 2019, issued in connection with U.S. Appl. No. 16/131,392, filed Sep. 14, 2018, 9 pages.
Notice of Allowance mailed on Oct. 30, 2020, issued in connection with U.S. Appl. No. 16/528,016, filed Jul. 31, 2019, 10 pages.
Notice of Allowance mailed on May 31, 2019, issued in connection with U.S. Appl. No. 15/717,621, filed Sep. 27, 2017, 9 pages.
Notice of Allowance mailed on Jun. 4, 2021, issued in connection with U.S. Appl. No. 16/528,265, filed Jul. 31, 2019, 17 pages.
Final Office Action mailed on Apr. 30, 2019, issued in connection with U.S. Appl. No. 15/098,760, filed Apr. 14, 2016, 6 pages.
Final Office Action mailed on Jun. 4, 2021, issued in connection with U.S. Appl. No. 16/168,389, filed Oct. 23, 2018, 38 pages.
Final Office Action mailed on Oct. 4, 2021, issued in connection with U.S. Appl. No. 16/806,747, filed Mar. 2, 2020, 17 pages.
Final Office Action mailed on Feb. 5, 2019, issued in connection with U.S. Appl. No. 15/438,749, filed Feb. 21, 2017, 17 pages.
Final Office Action mailed on Feb. 7, 2020, issued in connection with U.S. Appl. No. 15/948,541, filed Apr. 9, 2018, 8 pages.
Final Office Action mailed on Jun. 8, 2021, issued in connection with U.S. Appl. No. 16/271,550, filed Feb. 8, 2019, 41 pages.
Final Office Action mailed on Sep. 8, 2020, issued in connection with U.S. Appl. No. 16/213,570, filed Dec. 7, 2018, 12 pages.
Fiorenza Arisio et al. "Deliverable 1.1 User Study, analysis of requirements and definition of the application task," May 31, 2012, http://dirha.fbk.eu/sites/dirha.fbk.eu/files/docs/DIRHA_D1.1., 31 pages.
First Action Interview Office Action mailed on Mar. 8, 2021, issued in connection with U.S. Appl. No. 16/798,967, filed Feb. 24, 2020, 4 pages.
First Action Interview Office Action mailed on Aug. 14, 2019, issued in connection with U.S. Appl. No. 16/227,308, filed Dec. 20, 2018, 4 pages.
First Action Interview Office Action mailed on Jun. 15, 2020, issued in connection with U.S. Appl. No. 16/213,570, filed Dec. 7, 2018, 4 pages.
First Action Interview Office Action mailed on Jun. 2, 2020, issued in connection with U.S. Appl. No. 16/109,375, filed Aug. 22, 2018, 10 pages.
First Action Interview Office Action mailed on Jan. 22, 2020, issued in connection with U.S. Appl. No. 15/989,715, filed May 25, 2018, 3 pages.
First Action Interview Office Action mailed on Jul. 5, 2019, issued in connection with U.S. Appl. No. 16/227,308, filed Dec. 20, 2018, 4 pages.
Freiberger, Karl, "Development and Evaluation of Source Localization Algorithms for Coincident Microphone Arrays," Diploma Thesis, Apr. 1, 2010, 106 pages.
Giacobello et al. "A Sparse Nonuniformly Partitioned Multidelay Filter for Acoustic Echo Cancellation," 2013, IEEE Workshop on Applications of Signal Processing to Audio and Acoustics, Oct. 2013, New Paltz, NY, 4 pages.
Giacobello et al. "Tuning Methodology for Speech Enhancement Algorithms using a Simulated Conversational Database and Perceptual Objective Measures," 2014, 4th Joint Workshop on Hands-free Speech Communication and Microphone Arrays HSCMA, 2014, 5 pages.
Han et al. "Deep Compression: Compressing Deep Neural Networks with Pruning, Trained Quantization and Huffman Coding." ICLR 2016, Feb. 15, 2016, 14 pages.
Hans Speidel: "Chatbot Training: How to use training data to provide fully automated customer support", Jun. 29, 2017, pp. 1-3, XP055473185, Retrieved from the Internet: URL:https://www.crowdguru.de/wp-content/uploads/Case-Study-Chatbot-training-How-to-use-training-data-to-provide-fully-automated-customer-support.pdf [retrieved on May 7, 2018].
Helwani et al "Source-domain adaptive filtering for MIMO systems with application to acoustic echo cancellation", Acoustics Speech and Signal Processing, 2010 IEEE International Conference, Mar. 14, 2010, 4 pages.
Hirano et al. "A Noise-Robust Stochastic Gradient Algorithm with an Adaptive Step-Size Suitable for Mobile Hands-Free Telephones," 1995, International Conference on Acoustics, Speech, and Signal Processing, vol. 2, 4 pages.
Indian Patent Office, Examination Report mailed on May 24, 2021, issued in connection with Indian Patent Application No. 201847035595, 6 pages.
Indian Patent Office, Examination Report mailed on Feb. 25, 2021, issued in connection with Indian Patent Application No. 201847035625, 6 pages.
International Bureau, International Preliminary Report on Patentability and Written Opinion, mailed on Apr. 1, 2021, issued in connection with International Application No. PCT/US2019/052129, filed on Sep. 20, 2019, 13 pages.
International Bureau, International Preliminary Report on Patentability and Written Opinion, mailed on Jul. 1, 2021, issued in connection with International Application No. PCT/US2019/067576, filed on Dec. 19, 2019, 8 pages.
International Bureau, International Preliminary Report on Patentability and Written Opinion, mailed on Aug. 10, 2021, issued in connection with International Application No. PCT/US2020/017150, filed on Feb. 7, 2020, 20 pages.
International Bureau, International Preliminary Report on Patentability and Written Opinion, mailed on Dec. 10, 2020, issued in connection with International Application No. PCT/US2019/033945, filed on May 25, 2018, 7 pages.
International Bureau, International Preliminary Report on Patentability and Written Opinion, mailed on Mar. 10, 2020, issued in connection with International Application No. PCT/US2018/050050, filed on Sep. 7, 2018, 7 pages.
International Bureau, International Preliminary Report on Patentability and Written Opinion, mailed on Apr. 15, 2021, issued in connection with International Application No. PCT/US2019/054332, filed on Oct. 2, 2019, 9 pages.
International Bureau, International Preliminary Report on Patentability and Written Opinion, mailed on Jan. 15, 2019, issued in

(56) **References Cited**

OTHER PUBLICATIONS

connection with International Application No. PCT/US2017/042170, filed on Jul. 14, 2017, 7 pages.
International Bureau, International Preliminary Report on Patentability and Written Opinion, mailed on Jan. 15, 2019, issued in connection with International Application No. PCT/US2017/042227, filed on Jul. 14, 2017, 7 pages.
International Bureau, International Preliminary Report on Patentability and Written Opinion, mailed on Mar. 25, 2021, issued in connection with International Application No. PCT/US2019/050852, filed on Sep. 12, 2019, 8 pages.
International Bureau, International Preliminary Report on Patentability and Written Opinion, mailed on Aug. 27, 2019, issued in connection with International Application No. PCT/US2018/019010, filed on Feb. 21, 2018, 9 pages.
International Bureau, International Preliminary Report on Patentability and Written Opinion, mailed on Mar. 31, 2020, issued in connection with International Application No. PCT/US2018/053517, filed on Sep. 28, 2018, 10 pages.
International Bureau, International Preliminary Report on Patentability and Written Opinion, mailed on Feb. 5, 2019, issued in connection with International Application No. PCT/US2017/045521, filed on Aug. 4, 2017, 7 pages.
International Bureau, International Preliminary Report on Patentability and Written Opinion, mailed on Feb. 5, 2019, issued in connection with International Application No. PCT/US2017/045551, filed on Aug. 4, 2017, 9 pages.
International Bureau, International Preliminary Report on Patentability and Written Opinion, mailed on Jan. 7, 2021, issued in connection with International Application No. PCT/US2019/039828, filed on Jun. 28, 2019, 11 pages.
International Bureau, International Preliminary Report on Patentability and Written Opinion, mailed on Apr. 8, 2021, issued in connection with International Application No. PCT/US2019/052654, filed on Sep. 24, 2019, 7 pages.
International Bureau, International Preliminary Report on Patentability and Written Opinion, mailed on Apr. 8, 2021, issued in connection with International Application No. PCT/US2019/052841, filed on Sep. 25, 2019, 8 pages.
International Bureau, International Preliminary Report on Patentability and Written Opinion, mailed on Apr. 8, 2021, issued in connection with International Application No. PCT/US2019/053253, filed on Sep. 26, 2019, 10 pages.
International Bureau, International Preliminary Report on Patentability, mailed on Apr. 11, 2019, issued in connection with International Application No. PCT/US2017/0054063, filed on Sep. 28, 2017, 9 pages.
International Bureau, International Preliminary Report on Patentability, mailed on Jun. 17, 2021, issued in connection with International Application No. PCT/US2019/064907, filed on Dec. 6, 2019, 8 pages.
International Bureau, International Preliminary Report on Patentability, mailed on Mar. 2, 2021, issued in connection with International Application No. PCT/US2019/048558, filed on Aug. 28, 2019, 8 pages.
International Bureau, International Preliminary Report on Patentability, mailed on Feb. 20, 2020, issued in connection with International Application No. PCT/US2018/045397, filed on Aug. 6, 2018, 8 pages.
International Bureau, International Preliminary Report on Patentability, mailed on Apr. 23, 2019, issued in connection with International Application No. PCT/US2017/057220, filed on Oct. 18, 2017, 7 pages.
International Bureau, International Preliminary Report on Patentability, mailed on Mar. 31, 2020, issued in connection with International Application No. PCT/US2018053123, filed on Sep. 27, 2018, 12 pages.
International Bureau, International Preliminary Report on Patentability, mailed on Mar. 31, 2020, issued in connection with International Application No. PCT/US2018053472, filed on Sep. 28, 2018, 8 pages.
International Bureau, International Preliminary Report on Patentability, mailed on Mar. 31, 2020, issued in connection with International Application No. PCT/US2018053517, filed on Sep. 28, 2018, 10 pages.
International Bureau, International Preliminary Report on Patentability, mailed on Sep. 7, 2018, issued in connection with International Application No. PCT/US2017/018728, filed on Feb. 21, 2017, 8 pages.
International Bureau, International Preliminary Report on Patentability, mailed on Sep. 7, 2018, issued in connection with International Application No. PCT/US2017/018739, filed on Feb. 21, 2017, 7 pages.
Australian Patent Office, Australian Examination Report Action mailed on Jul. 11, 2023, issued in connection with Australian Application No. 2022246446, 2 pages.
Australian Patent Office, Australian Examination Report Action mailed on Jun. 14, 2023, issued in connection with Australian Application No. 2019299865, 2 pages.
Australian Patent Office, Australian Examination Report Action mailed on Sep. 25, 2023, issued in connection with Australian Application No. 2018338812, 3 pages.
Chinese Patent Office, First Office Action and Translation mailed on Sep. 6, 2023, issued in connection with Chinese Application No. 202010179593.8, 14 pages.
Chinese Patent Office, Second Office Action mailed on May 30, 2023, issued in connection with Chinese Application No. 201980070006.7, 9 pages.
European Patent Office, European EPC Article 94.3 mailed on Jun. 5, 2023, issued in connection with European Application No. 20710649.3, 8 pages.
European Patent Office, European EPC Article 94.3 mailed on Jun. 27, 2023, issued in connection with European Application No. 21195031.6, 4 pages.
European Patent Office, European EPC Article 94.3 mailed on Mar. 29, 2023, issued in connection with European Application No. 22182193.7, 4 pages.
European Patent Office, European EPC Article 94.3 mailed on Jul. 31, 2023, issued in connection with European Application No. 21164130.3, 5 pages.
European Patent Office, European EPC Article 94.3 mailed on Apr. 6, 2023, issued in connection with European Application No. 21193616.6, 7 pages.
European Patent Office, European EPC Article 94.3 mailed on Sep. 6, 2023, issued in connection with European Application No. 19197116.7, 4 pages.
European Patent Office, European EPC Article 94.3 mailed on Sep. 7, 2023, issued in connection with European Application No. 20185599.6, 6 pages.
European Patent Office, European Search Report mailed on Sep. 21, 2023, issued in connection with European Application No. 23172783.5, 8 pages.
Final Office Action mailed on May 17, 2023, issued in connection with U.S. Appl. No. 16/168,389, filed Oct. 23, 2018, 44 pages.
Final Office Action mailed on Aug. 22, 2023, issued in connection with U.S. Appl. No. 18/061,570, filed Dec. 5, 2022, 12 pages.
Final Office Action mailed on Aug. 25, 2023, issued in connection with U.S. Appl. No. 16/989,350, filed Aug. 10, 2020, 21 pages.
Final Office Action mailed on Sep. 27, 2023, issued in connection with U.S. Appl. No. 18/048,034, filed Oct. 20, 2022, 9 pages.
Final Office Action mailed on Aug. 9, 2023, issued in connection with U.S. Appl. No. 17/493,430, filed Oct. 4, 2021, 19 pages.
Google LLC v. *Sonos, Inc.*, International Trade Commission Case No. 337-TA-1330, Order No. 25: Regarding Respondent Sonos, Inc.'s Omnibus Motion for Summary Determination; dated May 16, 2023, 7 pages.
Google LLC v. *Sonos, Inc.*, International Trade Commission Case No. 337-TA-1330, Order No. 28: Regarding Respondent Sonos, Inc.'s Omnibus Motion for Summary Determination; dated May 22, 2023, 3 pages.

(56) **References Cited**

OTHER PUBLICATIONS

Google LLC v. *Sonos, Inc.*, International Trade Commission Case No. 337-TA-1330, Order No. 37: Regarding Complainant Google LLC's Motions in Limine; dated Jul. 7, 2023, 10 pages.
Google LLC v. *Sonos, Inc.*, International Trade Commission Case No. 337-TA-1330, Respondent Sonos, Inc.'s Motion in Limine No. 4. Motion to Exclude Untimely Validity Arguments Regarding Claim 11 of U.S. Pat. No. 11,024,311; dated Jun. 13, 2023, 34 pages.
Google LLC v. *Sonos, Inc.*, International Trade Commission Case No. 337-TA-1330, Respondent Sonos, Inc.'s Response to Google's Motion in Limine No. 3 Preclude Sonos from Presenting Evidence or Argument that Claim 3 of the '748 Patent is Indefinite for Lack of Antecedent Basis; dated Jun. 12, 2023, 26 pages.
International Bureau, International Search Report and Written Opinion mailed on Mar. 20, 2023, issued in connection with International Application No. PCT/US2022/045399, filed on Sep. 30, 2022, 25 pages.
International Searching Authority, Invitation to Pay Additional Fees on Jan. 27, 2023, issued in connection with International Application No. PCT/US2022/045399, filed on Sep. 30, 2022, 19 pages.
Japanese Patent Office, Decision of Refusal and Translation mailed on May 23, 2023, issued in connection with Japanese Patent Application No. 2021-163622, 13 pages.
Japanese Patent Office, Notice of Reasons for Refusal and Translation mailed on Aug. 8, 2023, issued in connection with Japanese Patent Application No. 2022-101346, 6 pages.
Korean Patent Office, Korean Examination Report and Translation mailed on Apr. 10, 2023, issued in connection with Korean Application No. 10-2022-7024007, 8 pages.
Korean Patent Office, Korean Examination Report and Translation mailed on Jul. 19, 2023, issued in connection with Korean Application No. 10-2022-7024007, 9 pages.
Non-Final Office Action mailed on Aug. 10, 2023, issued in connection with U.S. Appl. No. 18/070,024, filed Nov. 28, 2022, 4 pages.
Non-Final Office Action mailed on Sep. 14, 2023, issued in connection with U.S. Appl. No. 17/528,843, filed Nov. 17, 2021, 20 pages.
Non-Final Office Action mailed on Jul. 18, 2023, issued in connection with U.S. Appl. No. 18/066,093, filed Dec. 14, 2022, 12 pages.
Non-Final Office Action mailed on Apr. 20, 2023, issued in connection with U.S. Appl. No. 18/061,570, filed Dec. 5, 2022, 12 pages.
Non-Final Office Action mailed on Jun. 23, 2023, issued in connection with U.S. Appl. No. 18/048,945, iled on Oct. 24, 2022, 10 pages.
Non-Final Office Action mailed on Apr. 24, 2023, issued in connection with U.S. Appl. No. 17/532,744, filed Nov. 22, 2021, 18 pages.
Non-Final Office Action mailed on Apr. 25, 2023, issued in connection with U.S. Appl. No. 17/536,572, filed Nov. 29, 2021, 8 pages.
Non-Final Office Action mailed on Apr. 25, 2023, issued in connection with U.S. Appl. No. 17/656,794, filed Mar. 28, 2022, 22 pages.
Non-Final Office Action mailed on May 25, 2023, issued in connection with U.S. Appl. No. 18/157,937, filed Jan. 23, 2023, 9 pages.
Non-Final Office Action mailed on Jul. 3, 2023, issued in connection with U.S. Appl. No. 17/135,173, filed Dec. 28, 2020, 22 pages.
Non-Final Office Action mailed on Jul. 5, 2023, issued in connection with U.S. Appl. No. 18/061,579, filed Dec. 5, 2022, 11 pages.
Non-Final Office Action mailed on Jun. 7, 2023, issued in connection with U.S. Appl. No. 16/179,779, filed Nov. 2, 2018, 29 pages.
Non-Final Office Action mailed on Jun. 8, 2023, issued in connection with U.S. Appl. No. 18/048,034, filed Oct. 20, 2022, 8 pages.
Non-Final Office Action mailed on Jun. 8, 2023, issued in connection with U.S. Appl. No. 18/061,243, filed Dec. 2, 2022, 10 pages.
Notice of Allowance mailed on Jun. 9, 2023, issued in connection with U.S. Appl. No. 17/532,674, filed Nov. 22, 2021, 13 pages.
Notice of Allowance mailed on Jul. 10, 2023, issued in connection with U.S. Appl. No. 17/315,599, filed May 10, 2021, 2 pages.
Notice of Allowance mailed on Aug. 11, 2023, issued in connection with U.S. Appl. No. 17/878,649, filed Aug. 1, 2022, 7 pages.
Notice of Allowance mailed on May 11, 2023, issued in connection with U.S. Appl. No. 18/061,638, filed Dec. 5, 2022, 15 pages.
Notice of Allowance mailed on Jul. 12, 2023, issued in connection with U.S. Appl. No. 18/151,619, filed Jan. 9, 2023, 13 pages.
Notice of Allowance mailed on Jun. 12, 2023, issued in connection with U.S. Appl. No. 17/453,632, filed Nov. 4, 2021, 9 pages.
Notice of Allowance mailed on Jul. 13, 2023, issued in connection with U.S. Appl. No. 18/145,501, filed Dec. 22, 2022, 9 pages.
Notice of Allowance mailed on Jun. 13, 2023, issued in connection with U.S. Appl. No. 17/249,776, filed Mar. 12, 2021, 10 pages.
Notice of Allowance mailed on Aug. 14, 2023, issued in connection with U.S. Appl. No. 17/549,034, filed Dec. 13, 2021, 9 pages.
Notice of Allowance mailed on Sep. 14, 2023, issued in connection with U.S. Appl. No. 18/061,579, filed Dec. 5, 2022, 7 pages.
Notice of Allowance mailed on Jun. 15, 2023, issued in connection with U.S. Appl. No. 17/305,698, filed Jul. 13, 2021, 8 pages.
Notice of Allowance mailed on Jun. 15, 2023, issued in connection with U.S. Appl. No. 17/305,920, filed Jul. 16, 2021, 8 pages.
Notice of Allowance mailed on Aug. 16, 2023, issued in connection with U.S. Appl. No. 17/536,572, filed Nov. 29, 2021, 7 pages.
Notice of Allowance mailed on Aug. 21, 2023, issued in connection with U.S. Appl. No. 17/548,921, filed Dec. 13, 2021, 10 pages.
Notice of Allowance mailed on Jul. 21, 2023, issued in connection with U.S. Appl. No. 17/986,241, filed Nov. 14, 2022, 12 pages.
Notice of Allowance mailed on Apr. 26, 2022, issued in connection with U.S. Appl. No. 17/896,129, filed Aug. 26, 2022, 8 pages.
Notice of Allowance mailed on Apr. 26, 2023, issued in connection with U.S. Appl. No. 17/658,717, filed Apr. 11, 2022, 11 pages.
Notice of Allowance mailed on Sep. 27, 2023, issued in connection with U.S. Appl. No. 18/048,945, filed Oct. 24, 2022, 9 pages.
Notice of Allowance mailed on Sep. 27, 2023, issued in connection with U.S. Appl. No. 18/061,243, filed Dec. 2, 2022, 8 pages.
Notice of Allowance mailed on Sep. 29, 2023, issued in connection with U.S. Appl. No. 16/168,389, filed Oct. 23, 2018, 11 pages.
Notice of Allowance mailed on Jun. 30, 2023, issued in connection with U.S. Appl. No. 17/303,001, filed May 18, 2021, 8 pages.
Notice of Allowance mailed on Aug. 31, 2023, issued in connection with U.S. Appl. No. 18/145,520, filed Dec. 22, 2022, 2 pages.
Notice of Allowance mailed on Aug. 4, 2023, issued in connection with U.S. Appl. No. 18/145,520, filed Dec. 22, 2022, 10 pages.

* cited by examiner

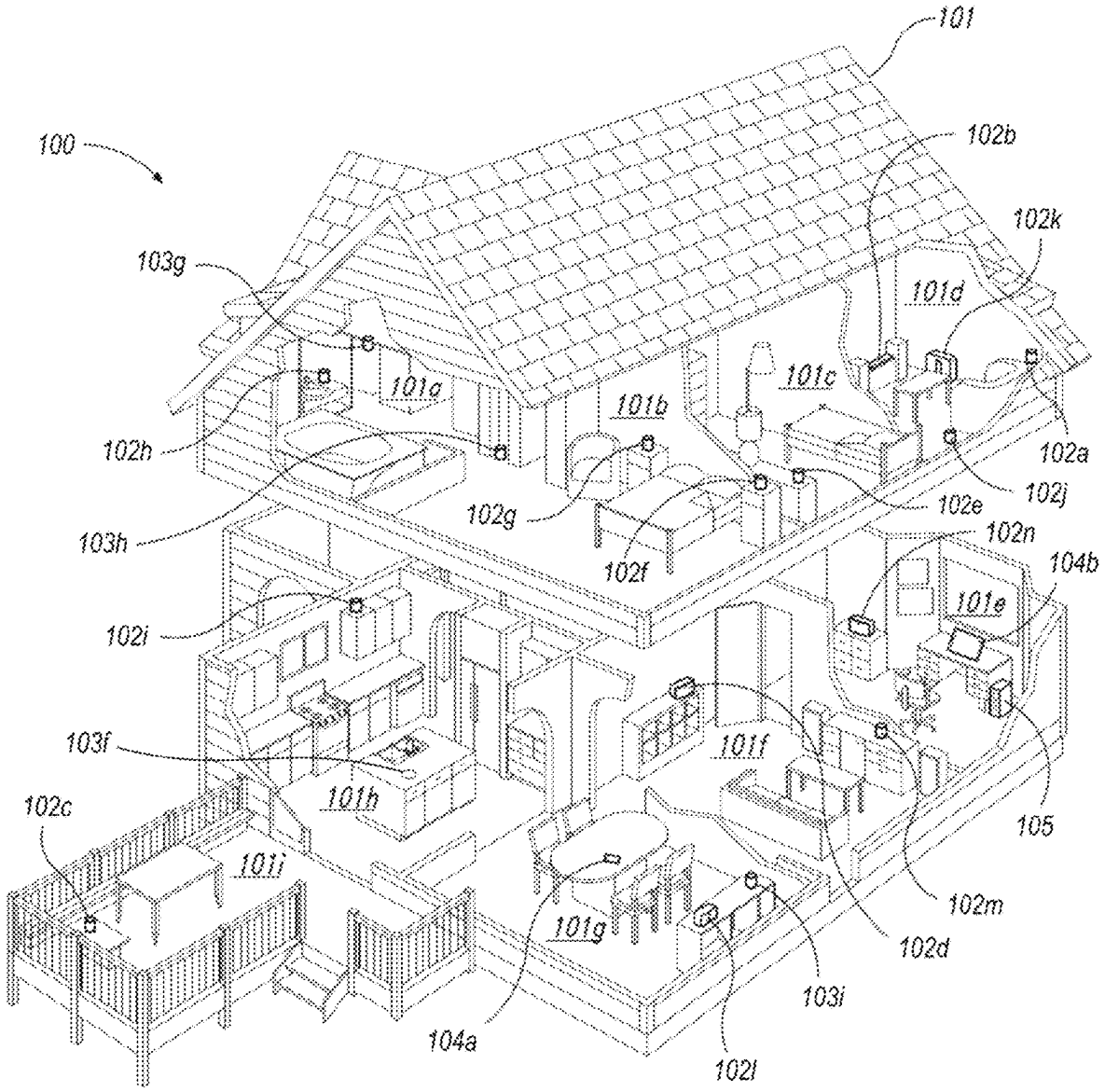
101
100
102b
102k
103g
101d
101a
101c
101b
102h
102a
102j
102g
102e
103h
102f
102n
104b
102i
101e
103f
101f
101h
102c
105
101i
102m
101g
102d
103i
104a
102l

Fig. 1A

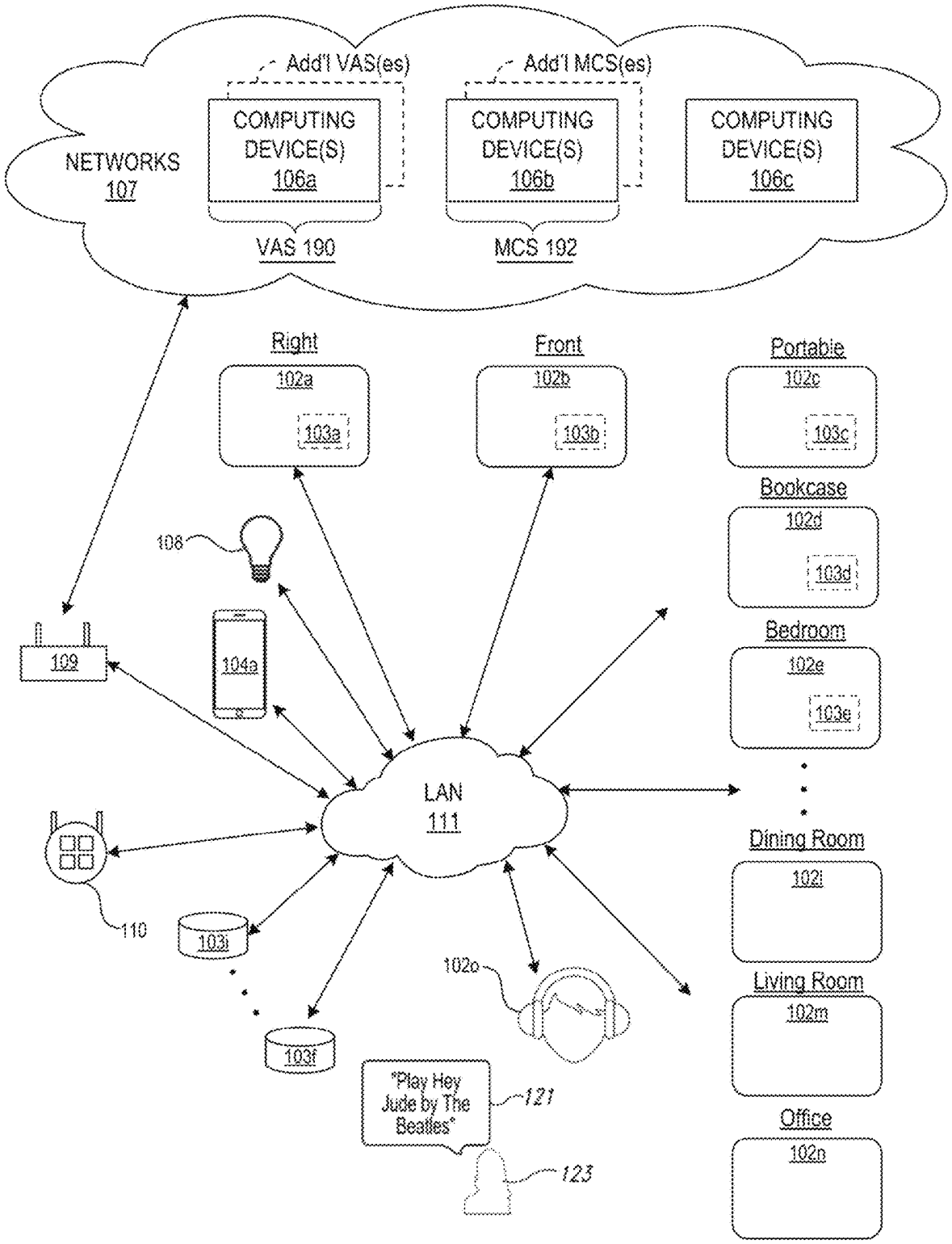
Add'l VAS(es)
Add'l MCS(es)
NETWORKS
107
COMPUTING DEVICE(S)
106a
COMPUTING DEVICE(S)
106b
COMPUTING DEVICE(S)
106c
VAS 190
MCS 192
Right
102a
103a
Front
102b
103b
Portable
102c
103c
Bookcase
102d
103d
Bedroom
102e
103e
Dining Room
102i
Living Room
102m
Office
102n
108
109
104a
LAN
111
110
103j
103f
102o
"Play Hey Jude by The Beatles"
121
123

Fig. 1B

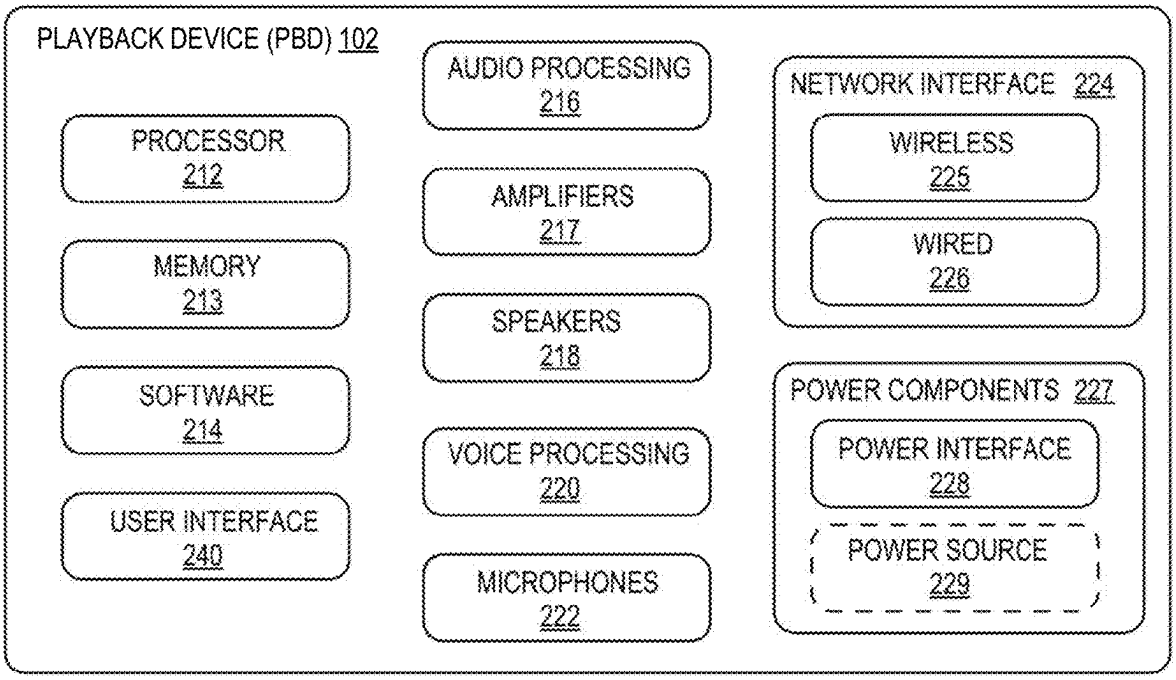
PLAYBACK DEVICE (PBD) 102
PROCESSOR 212
MEMORY 213
SOFTWARE 214
USER INTERFACE 240
AUDIO PROCESSING 216
AMPLIFIERS 217
SPEAKERS 218
VOICE PROCESSING 220
MICROPHONES 222
NETWORK INTERFACE 224
WIRELESS 225
WIRED 226
POWER COMPONENTS 227
POWER INTERFACE 228
POWER SOURCE 229

Fig. 2A

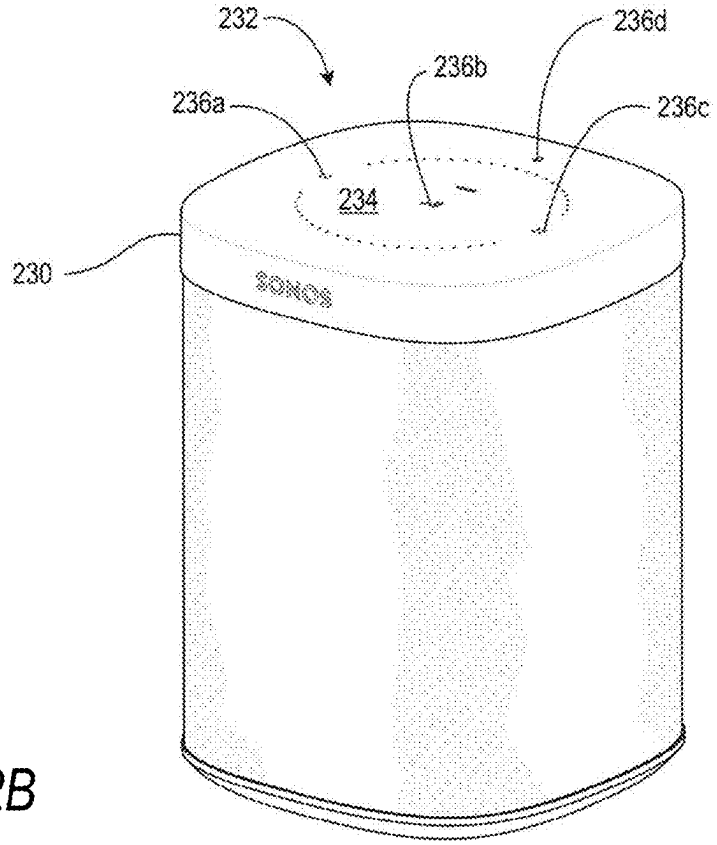
232
236d
236b
236a
236c
234
230
SONOS

Fig. 2B

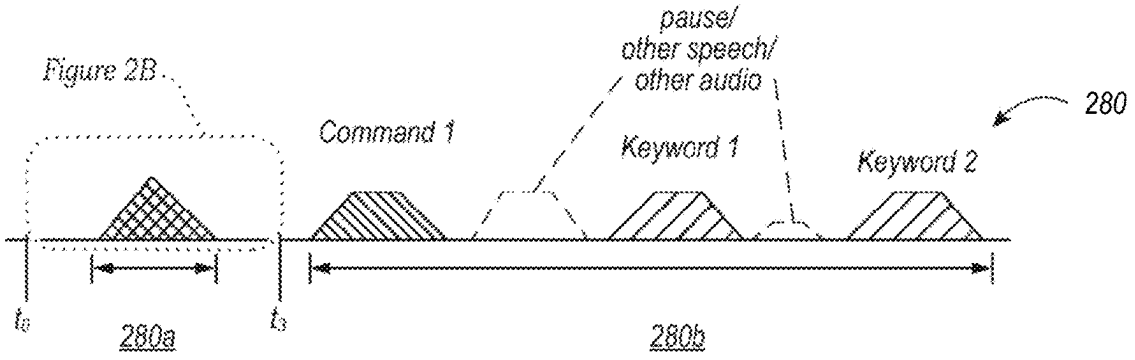
Figure 2B
pause/
other speech/
other audio
280
Command 1
Keyword 1
Keyword 2
t_0
280a
t_1
280b

Fig. 2C

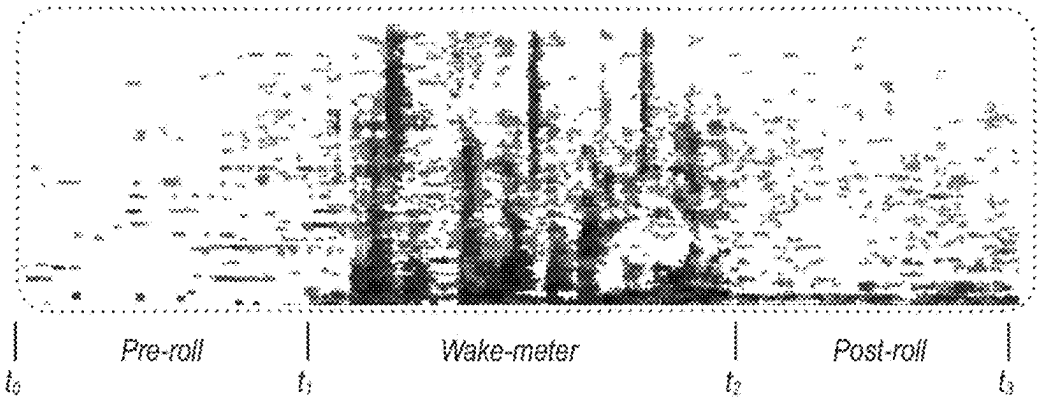
Pre-roll
Wake-meter
Post-roll
t_0
t_1
t_2
t_3

Fig. 2D

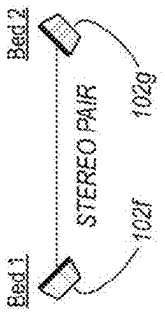

Fig. 3B

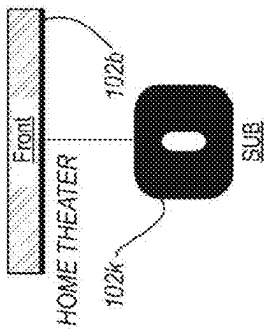

Fig. 3C

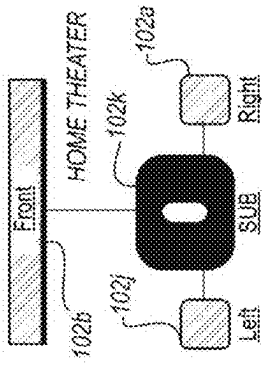

Fig. 3D

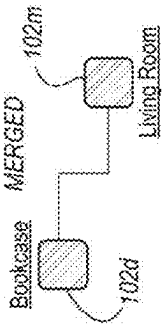

Fig. 3E

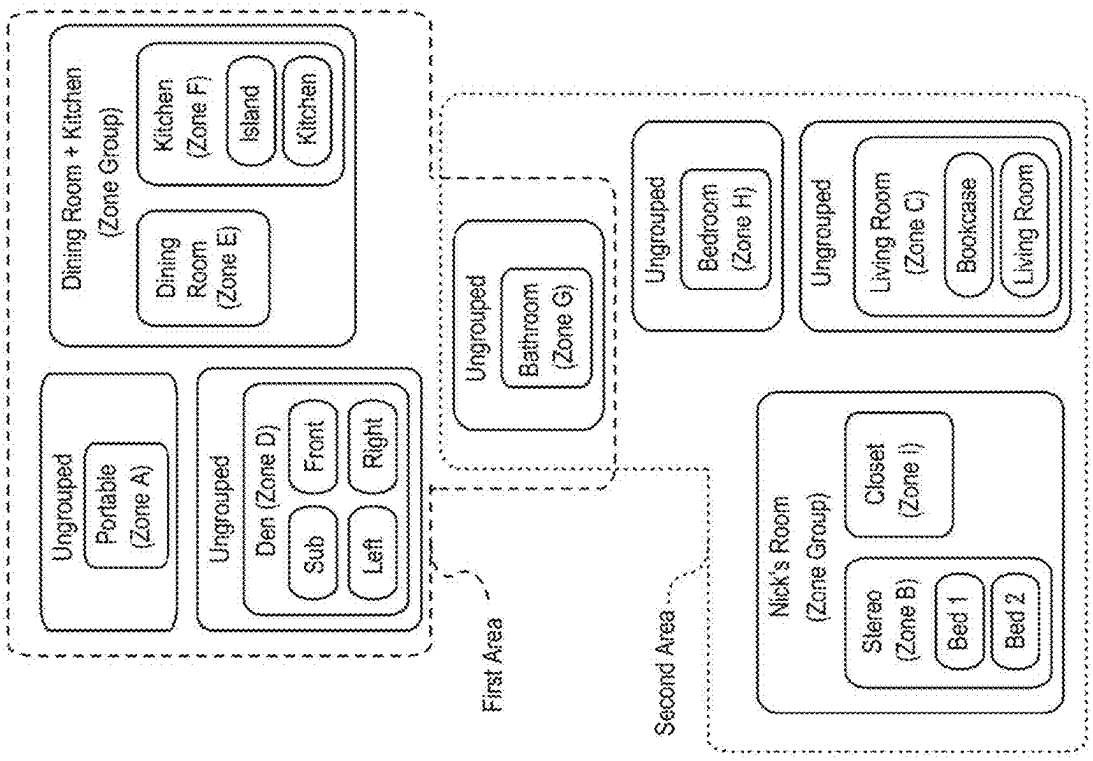

Fig. 3A

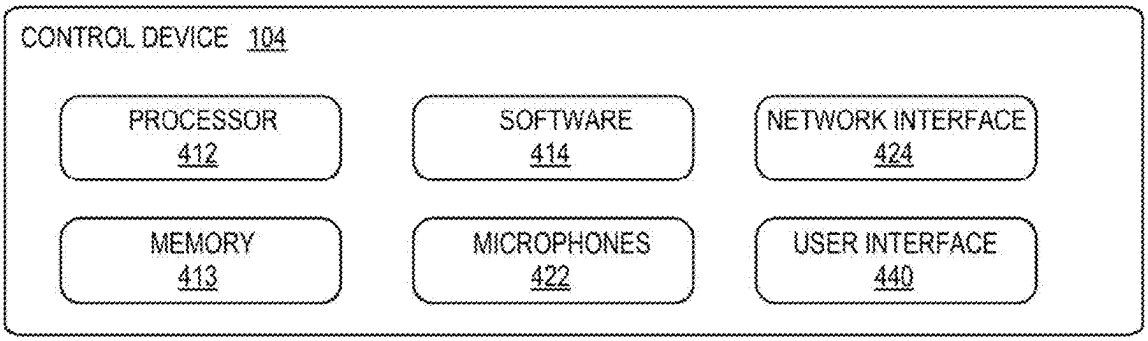

Fig. 4

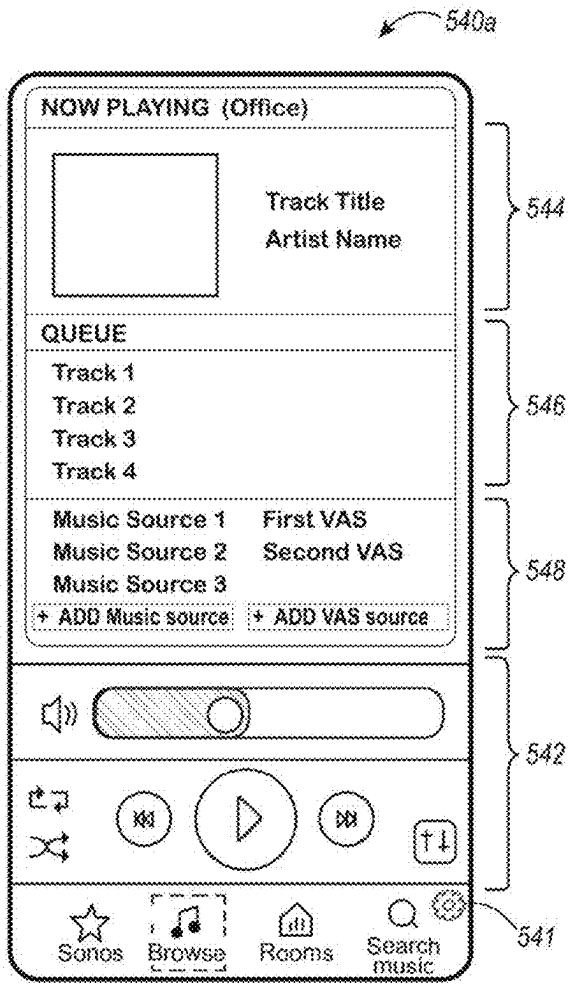

Fig. 5A

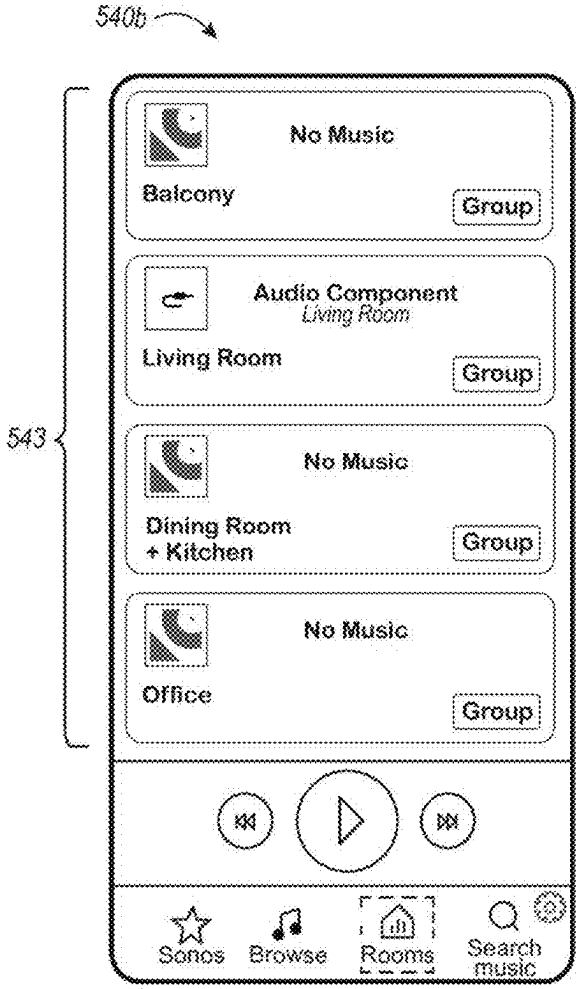

Fig. 5B

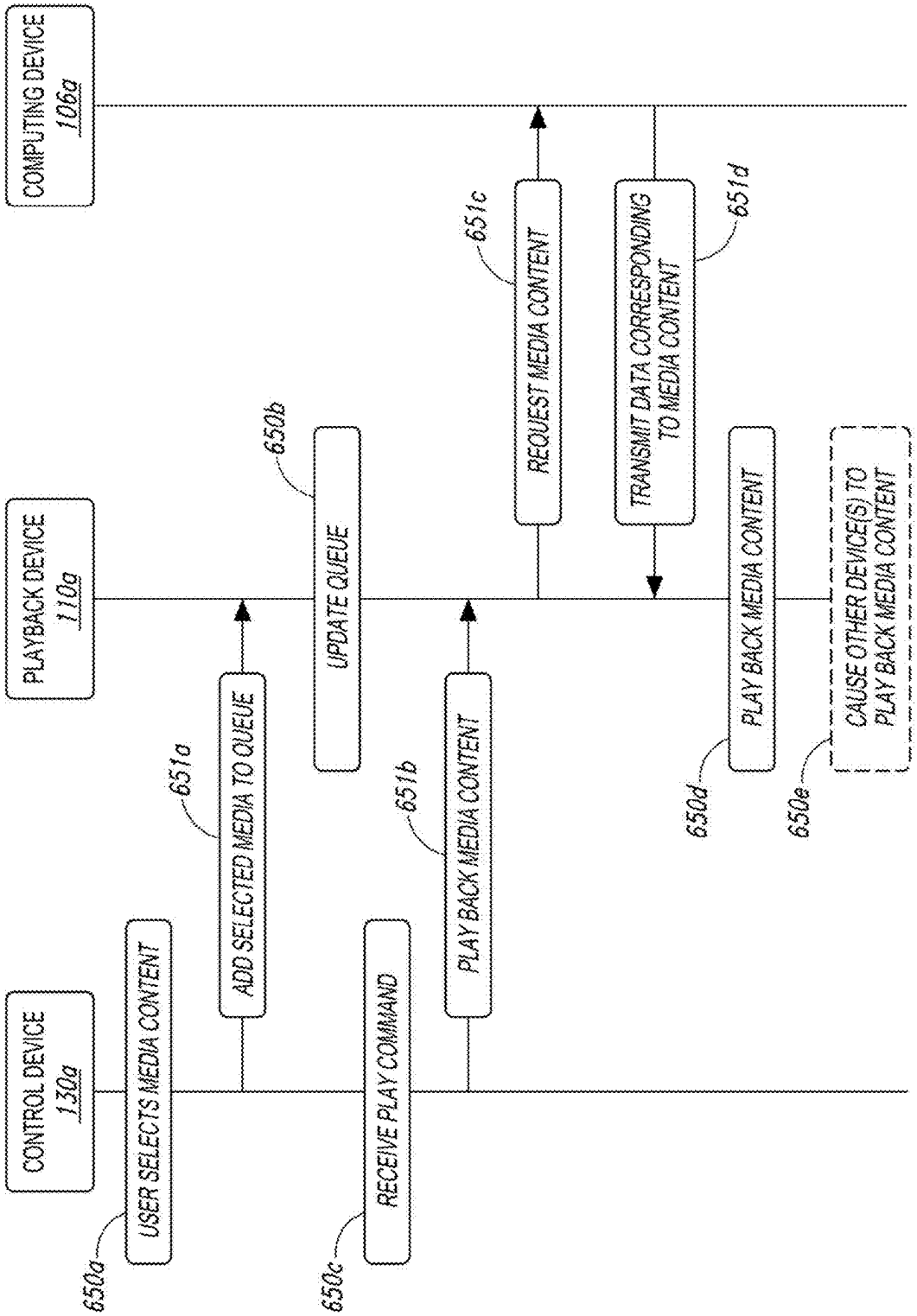
COMPUTING DEVICE
106a
PLAYBACK DEVICE
110a
CONTROL DEVICE
130a
USER SELECTS MEDIA CONTENT
650a
ADD SELECTED MEDIA TO QUEUE
651a
UPDATE QUEUE
650b
RECEIVE PLAY COMMAND
650c
PLAY BACK MEDIA CONTENT
651b
REQUEST MEDIA CONTENT
651c
TRANSMIT DATA CORRESPONDING TO MEDIA CONTENT
651d
PLAY BACK MEDIA CONTENT
650d
CAUSE OTHER DEVICE(S) TO PLAY BACK MEDIA CONTENT
650e

Fig. 6

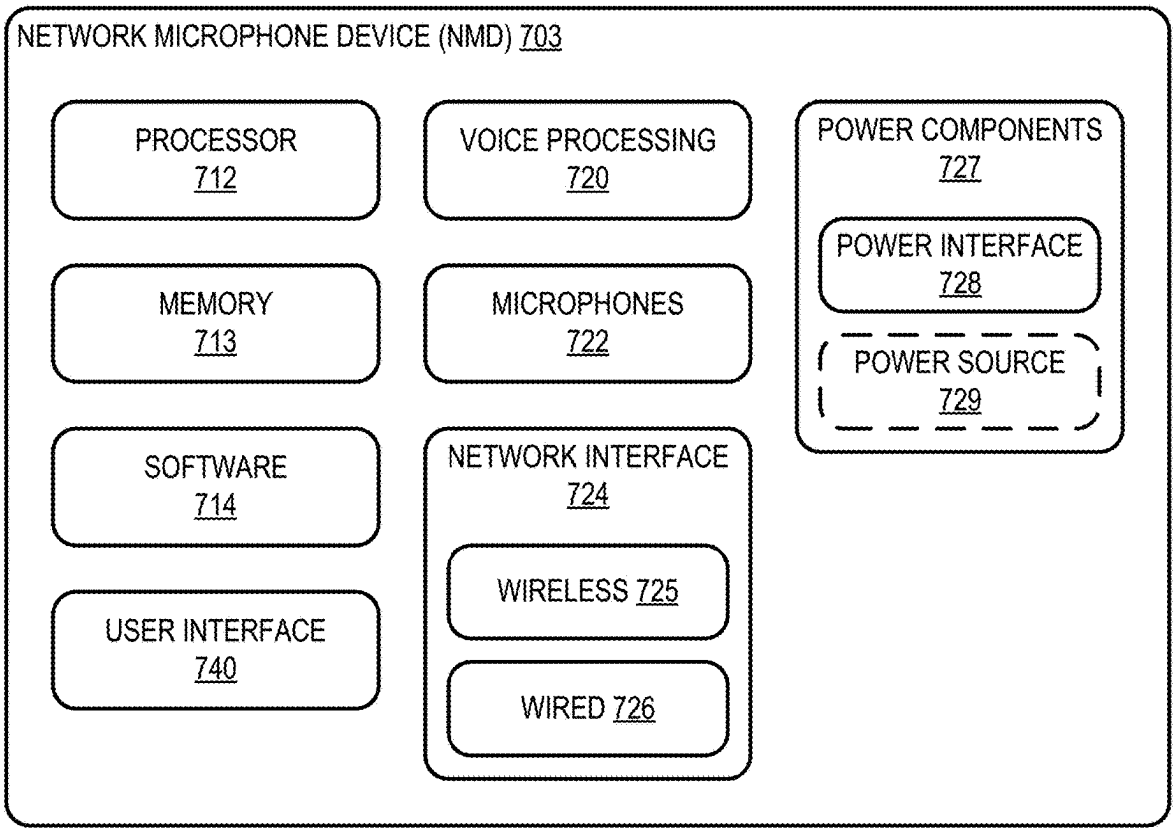
NETWORK MICROPHONE DEVICE (NMD) 703
PROCESSOR 712
VOICE PROCESSING 720
POWER COMPONENTS 727
POWER INTERFACE 728
POWER SOURCE 729
MEMORY 713
MICROPHONES 722
SOFTWARE 714
NETWORK INTERFACE 724
WIRELESS 725
WIRED 726
USER INTERFACE 740

Fig. 7A

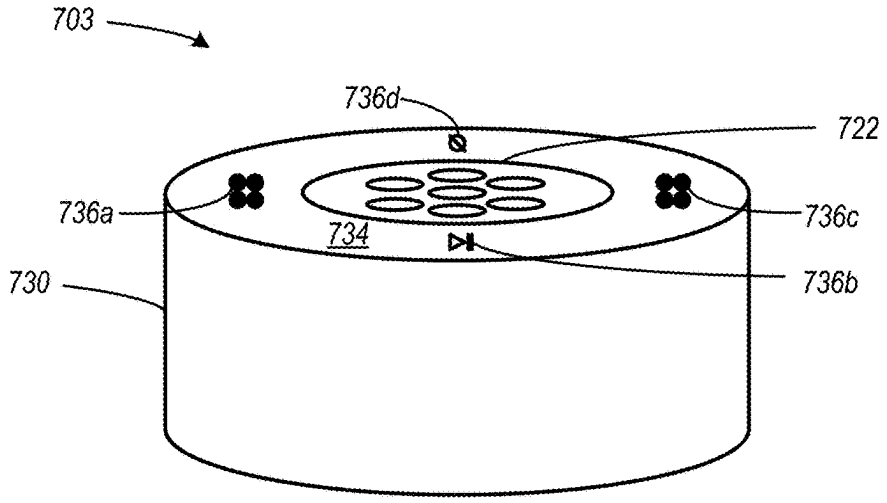
703
736d
722
736a
734
736c
730
736b

Fig. 7B

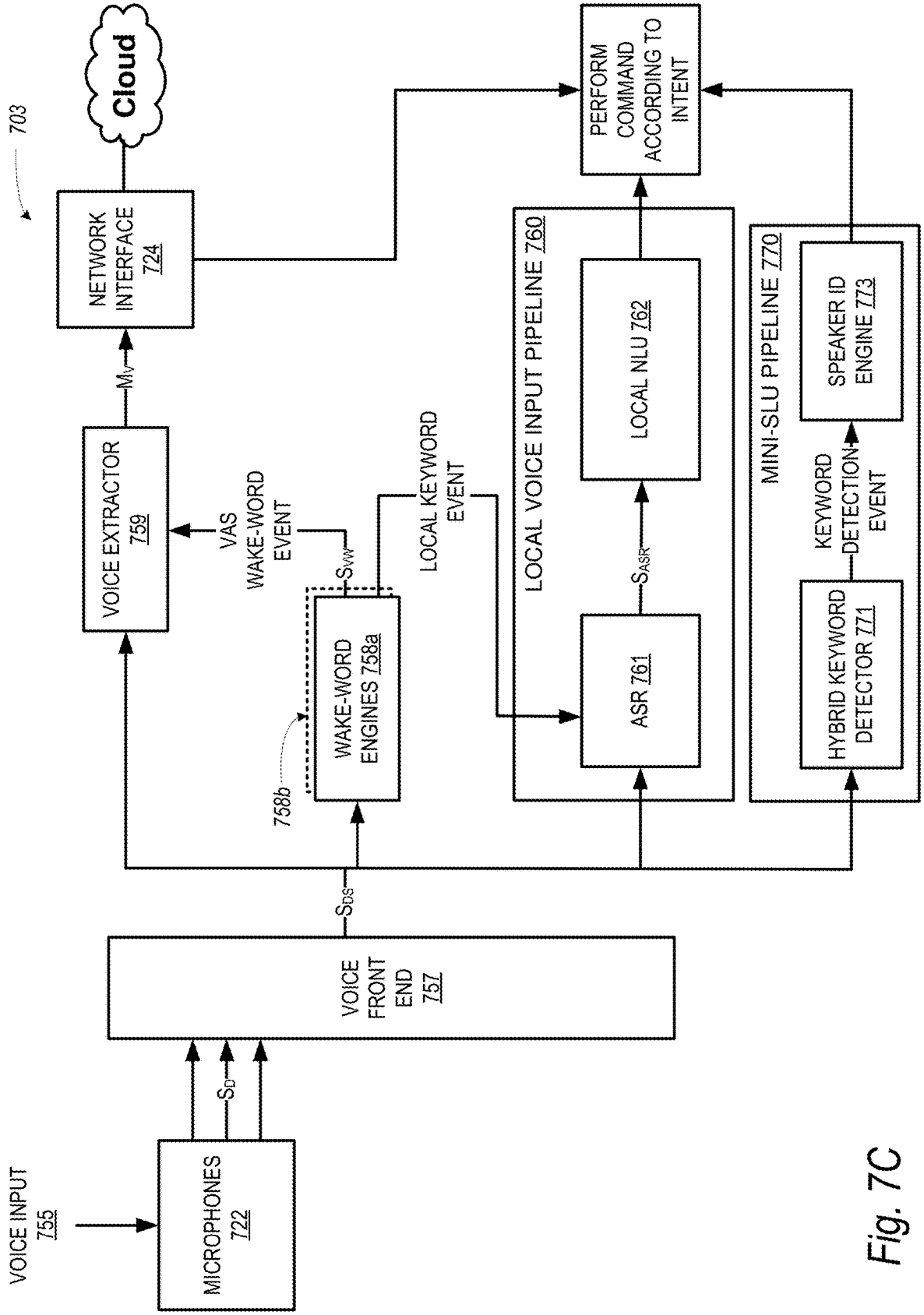
703
Cloud
NETWORK INTERFACE 724
M_V
VOICE EXTRACTOR 759
VAS WAKE-WORD EVENT
S_{WW}
758b
WAKE-WORD ENGINES 758a
LOCAL KEYWORD EVENT
LOCAL VOICE INPUT PIPELINE 760
LOCAL NLU 762
ASR 761
S_{ASR}
PERFORM COMMAND ACCORDING TO INTENT
MINI-SLU PIPELINE 770
SPEAKER ID ENGINE 773
KEYWORD DETECTION EVENT
HYBRID KEYWORD DETECTOR 771
S_{DS}
VOICE FRONT END 757
S_D
VOICE INPUT 755
MICROPHONES 722

Fig. 7C

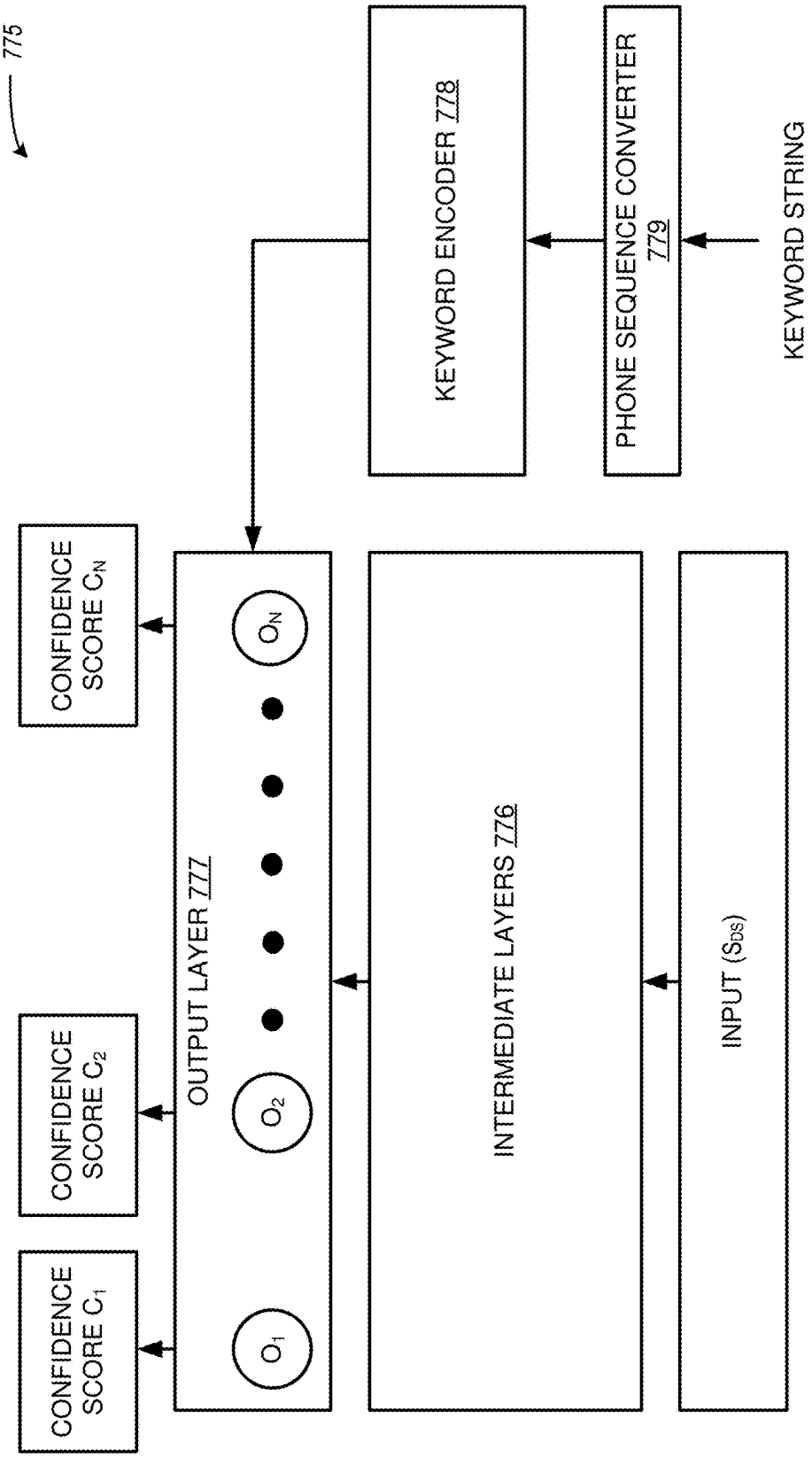
775
CONFIDENCE SCORE C_1
CONFIDENCE SCORE C_2
CONFIDENCE SCORE C_N
O_1
O_2
O_N
OUTPUT LAYER 777
INTERMEDIATE LAYERS 776
INPUT (S_{DS})
KEYWORD ENCODER 778
PHONE SEQUENCE CONVERTER 779
KEYWORD STRING

Fig. 7D

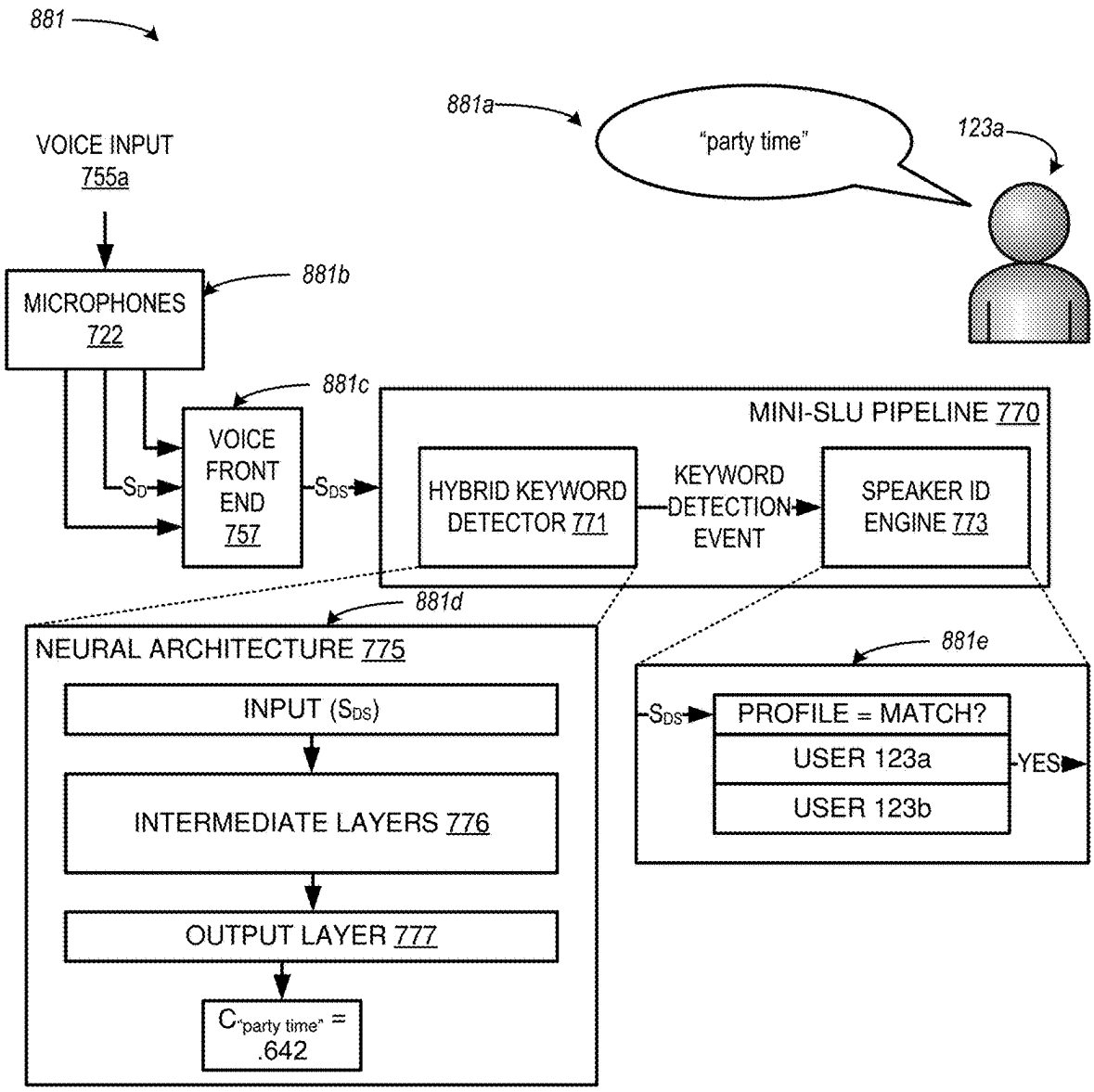
881
881a
"party time"
123a
VOICE INPUT
755a
MICROPHONES
722
881b
881c
VOICE
FRONT
END
757
S_D
S_{DS}
MINI-SLU PIPELINE 770
HYBRID KEYWORD
DETECTOR 771
KEYWORD
DETECTION
EVENT
SPEAKER ID
ENGINE 773
881d
NEURAL ARCHITECTURE 775
INPUT (S_{DS})
INTERMEDIATE LAYERS 776
OUTPUT LAYER 777
$C_{\text{"party time"}}$ =
.642
881e
S_{DS}
PROFILE = MATCH?
USER 123a
USER 123b
YES

Fig. 8A

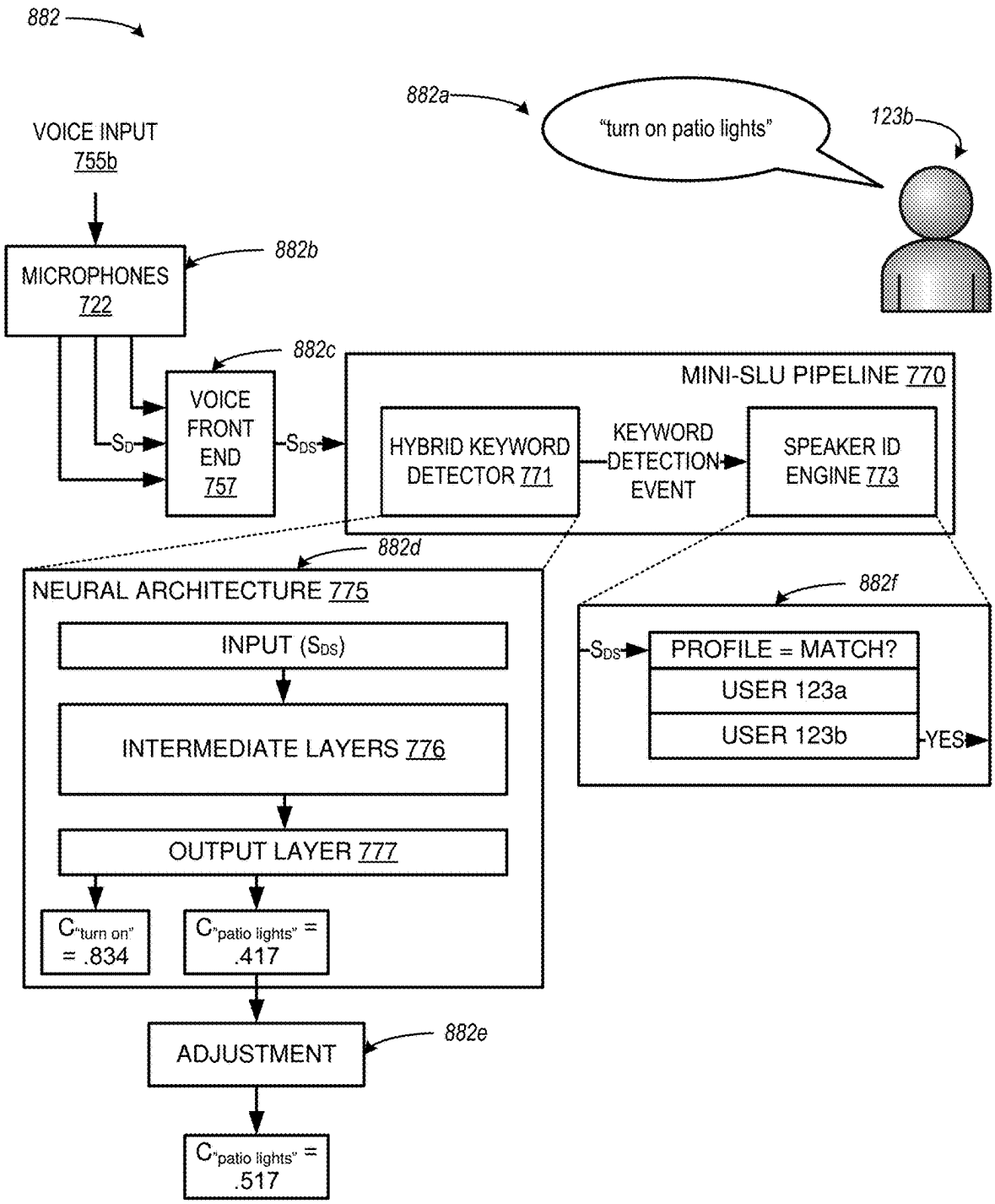
882
882a
"turn on patio lights"
123b
VOICE INPUT
755b
MICROPHONES
722
882b
882c
VOICE
FRONT
END
757
S_D
S_{DS}
MINI-SLU PIPELINE 770
HYBRID KEYWORD
DETECTOR 771
KEYWORD
DETECTION
EVENT
SPEAKER ID
ENGINE 773
882d
NEURAL ARCHITECTURE 775
INPUT (S_{DS})
INTERMEDIATE LAYERS 776
OUTPUT LAYER 777
$C_{"turn\ on"}$ = .834
$C_{"patio\ lights"}$ = .417
882f
S_{DS}
PROFILE = MATCH?
USER 123a
USER 123b
YES
ADJUSTMENT
882e
$C_{"patio\ lights"}$ = .517

Fig. 8B

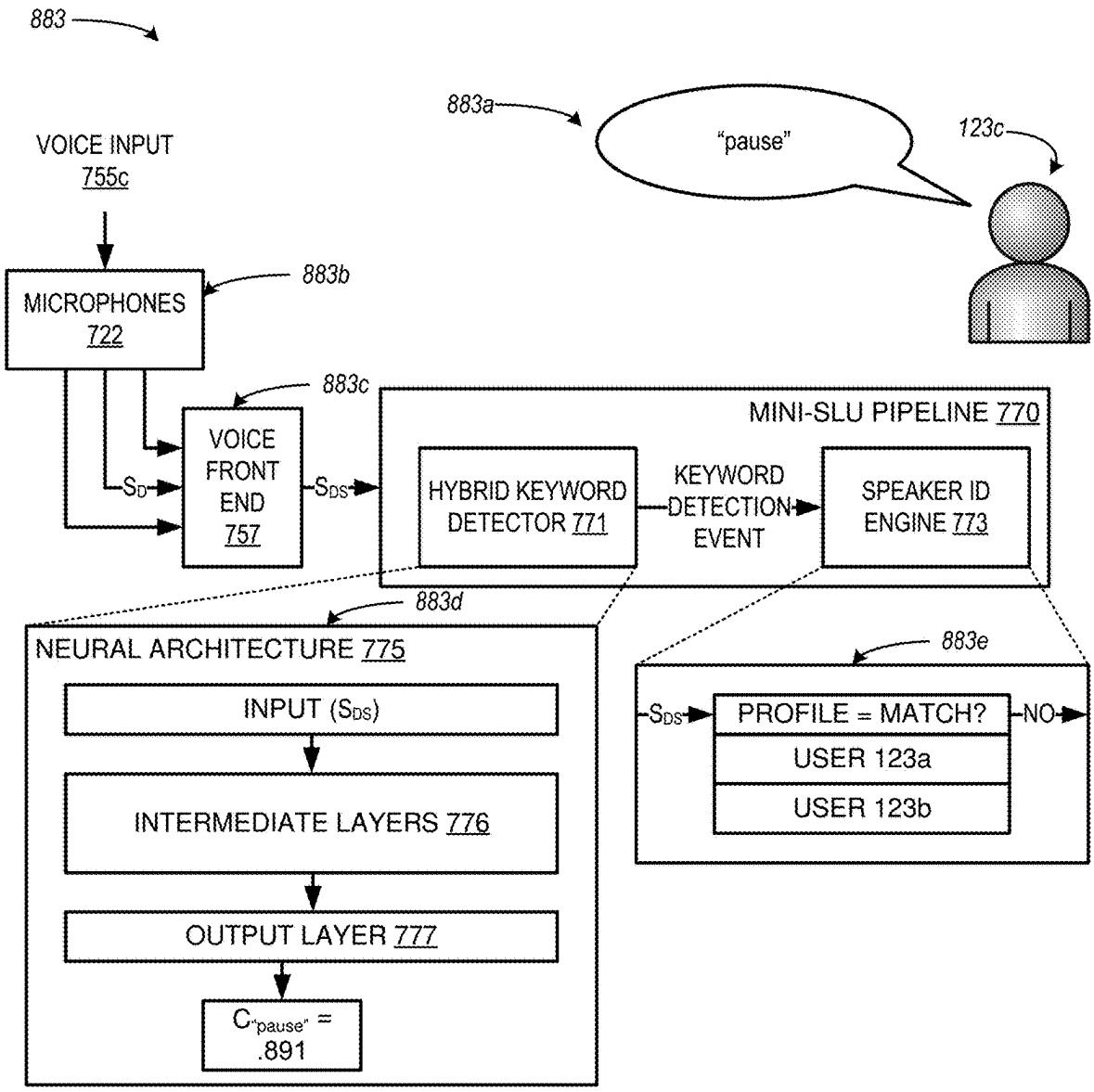
883
883a
"pause"
123c
VOICE INPUT
755c
MICROPHONES
722
883b
883c
VOICE
FRONT
END
757
S_D
S_{DS}
MINI-SLU PIPELINE 770
HYBRID KEYWORD
DETECTOR 771
KEYWORD
DETECTION
EVENT
SPEAKER ID
ENGINE 773
883d
NEURAL ARCHITECTURE 775
INPUT (S_{DS})
INTERMEDIATE LAYERS 776
OUTPUT LAYER 777
$C_{"pause"}$ =
.891
883e
S_{DS}
PROFILE = MATCH?
NO
USER 123a
USER 123b

Fig. 8C

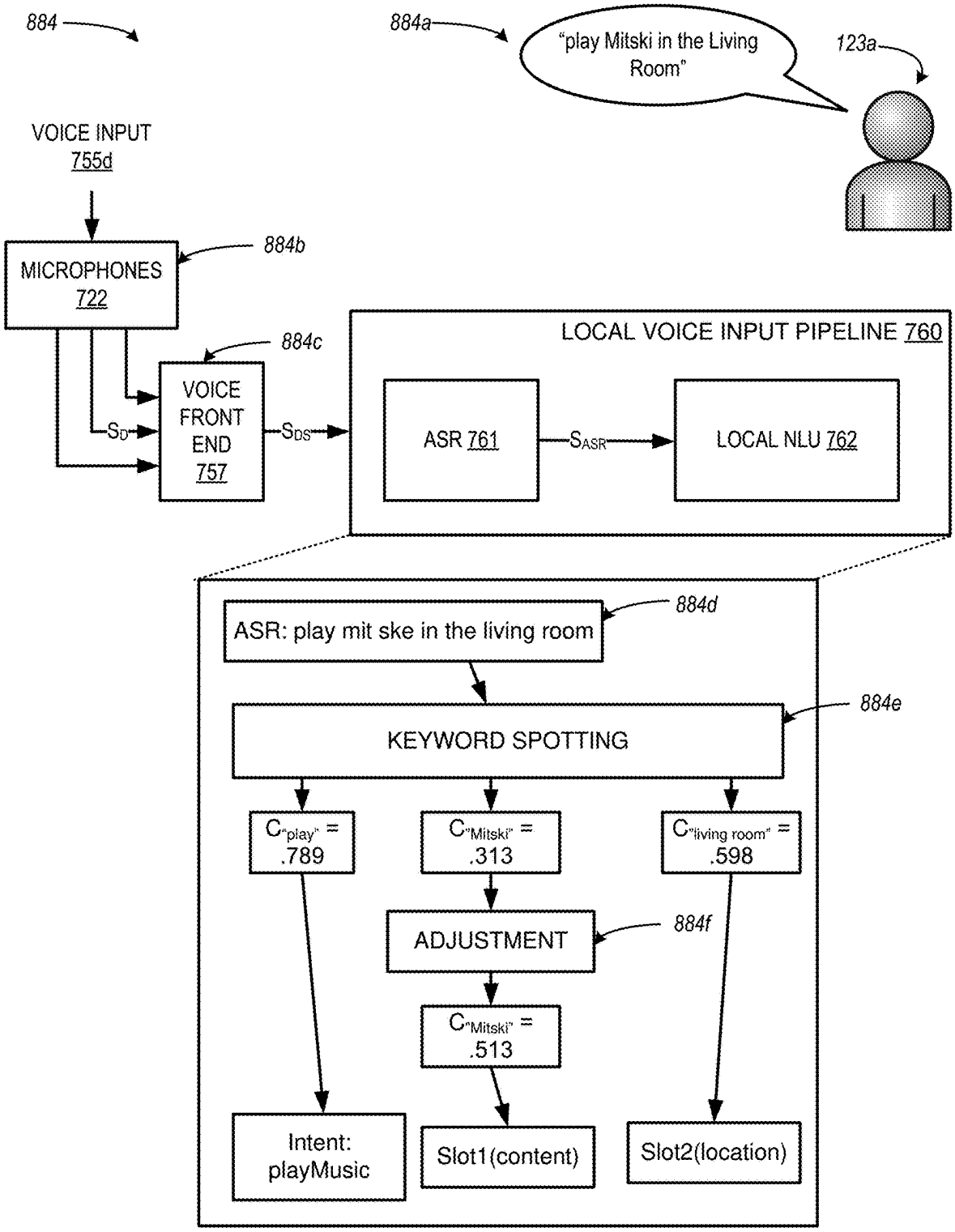
884
884a
"play Mitski in the Living Room"
123a
VOICE INPUT 755d
MICROPHONES 722
884b
884c
VOICE FRONT END 757
S_D
S_{DS}
LOCAL VOICE INPUT PIPELINE 760
ASR 761
S_{ASR}
LOCAL NLU 762
884d
ASR: play mit ske in the living room
884e
KEYWORD SPOTTING
$C_{"play"}$ = .789
$C_{"Mitski"}$ = .313
$C_{"living room"}$ = .598
ADJUSTMENT
884f
$C_{"Mitski"}$ = .513
Intent: playMusic
Slot1(content)
Slot2(location)

Fig. 8D

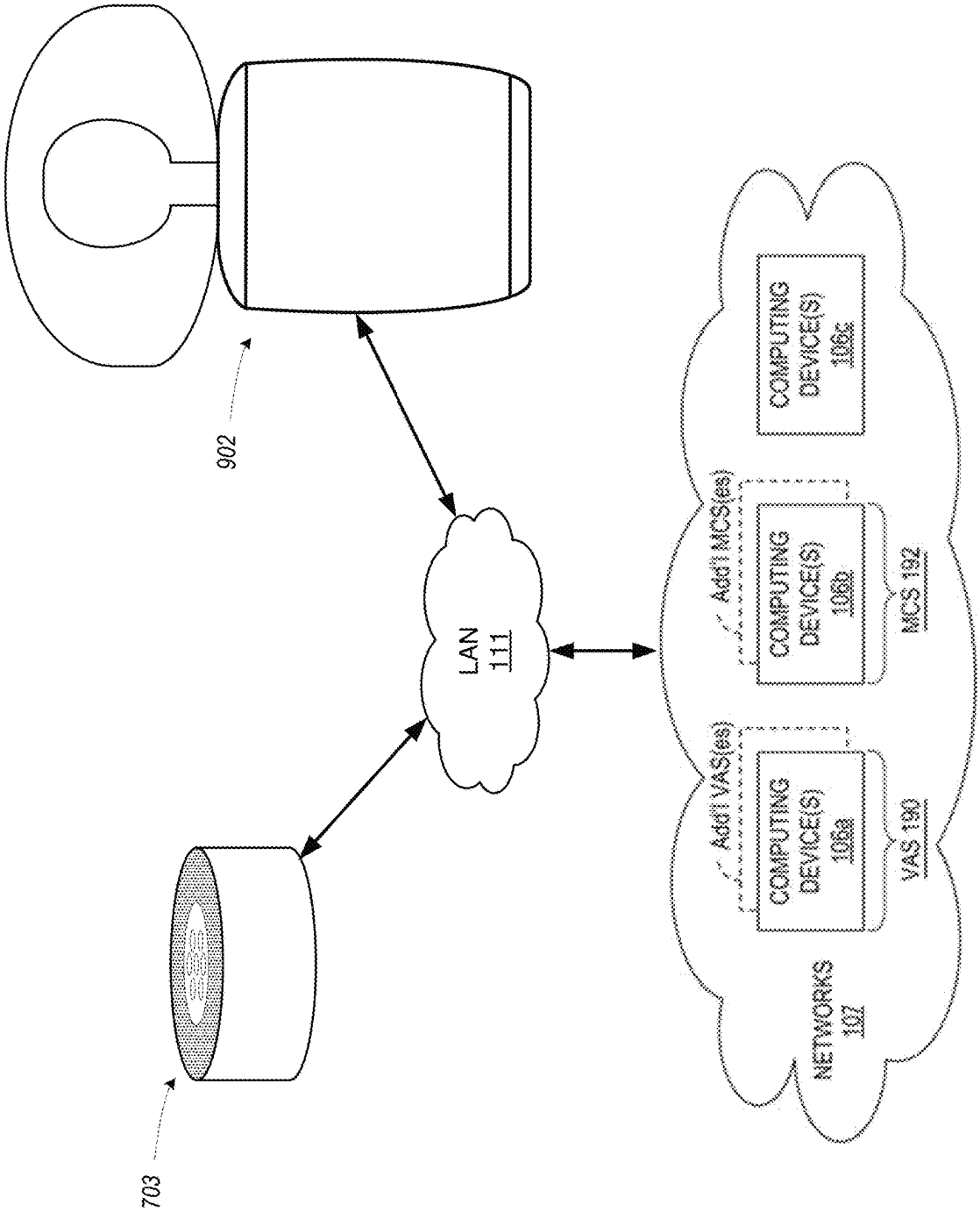
902
703
LAN
111
Addl VAS(es)
COMPUTING
DEVICE(S)
106a
VAS 190
Addl MCS(es)
COMPUTING
DEVICE(S)
106b
MCS 192
COMPUTING
DEVICE(S)
106c
NETWORKS
107

Fig. 9

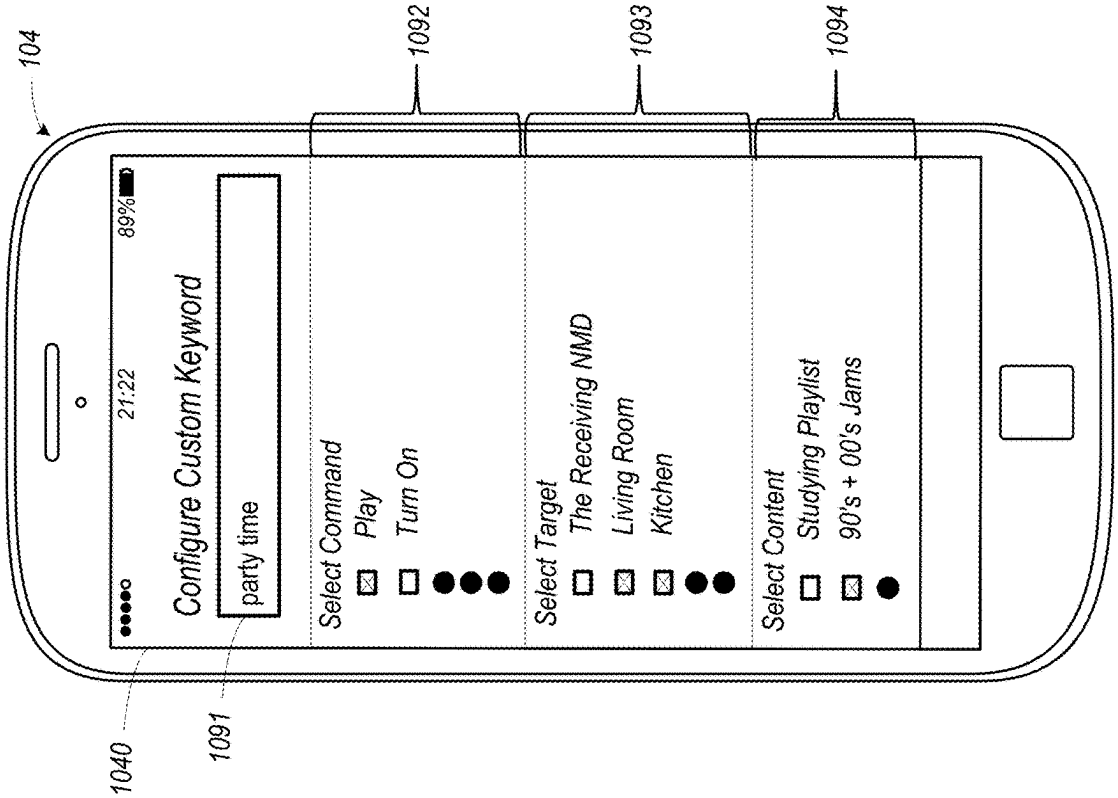

FIGURE 10B

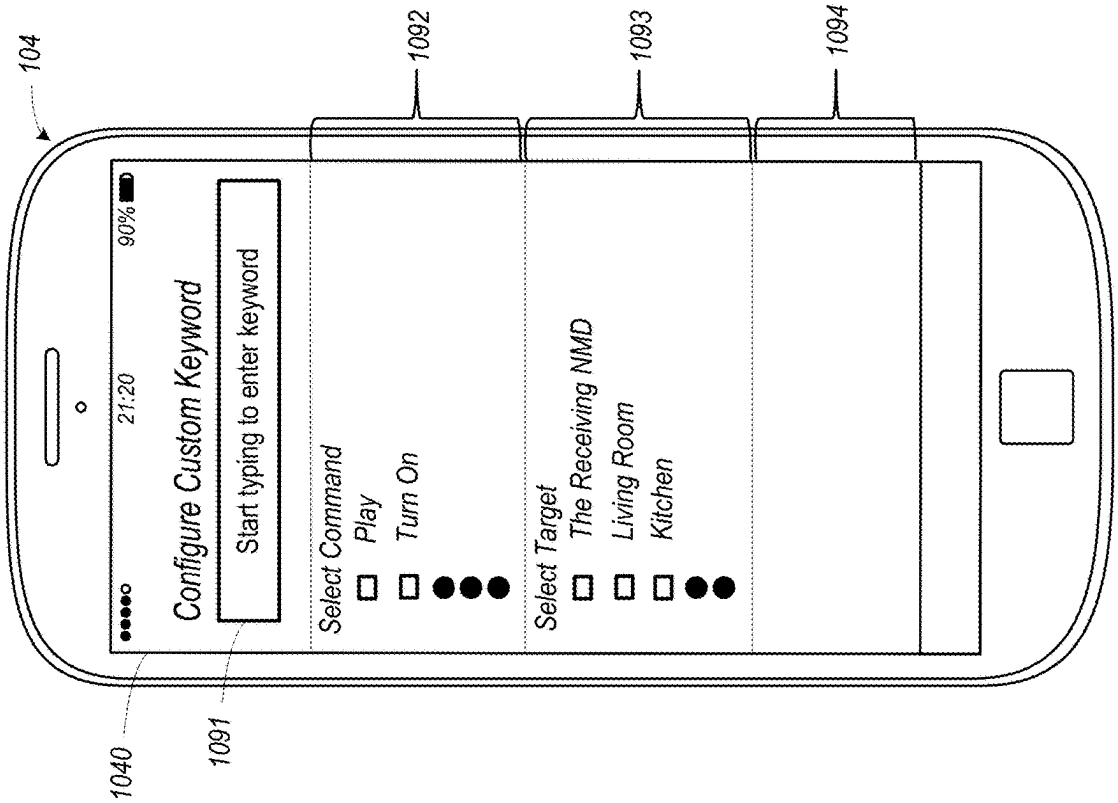

FIGURE 10A

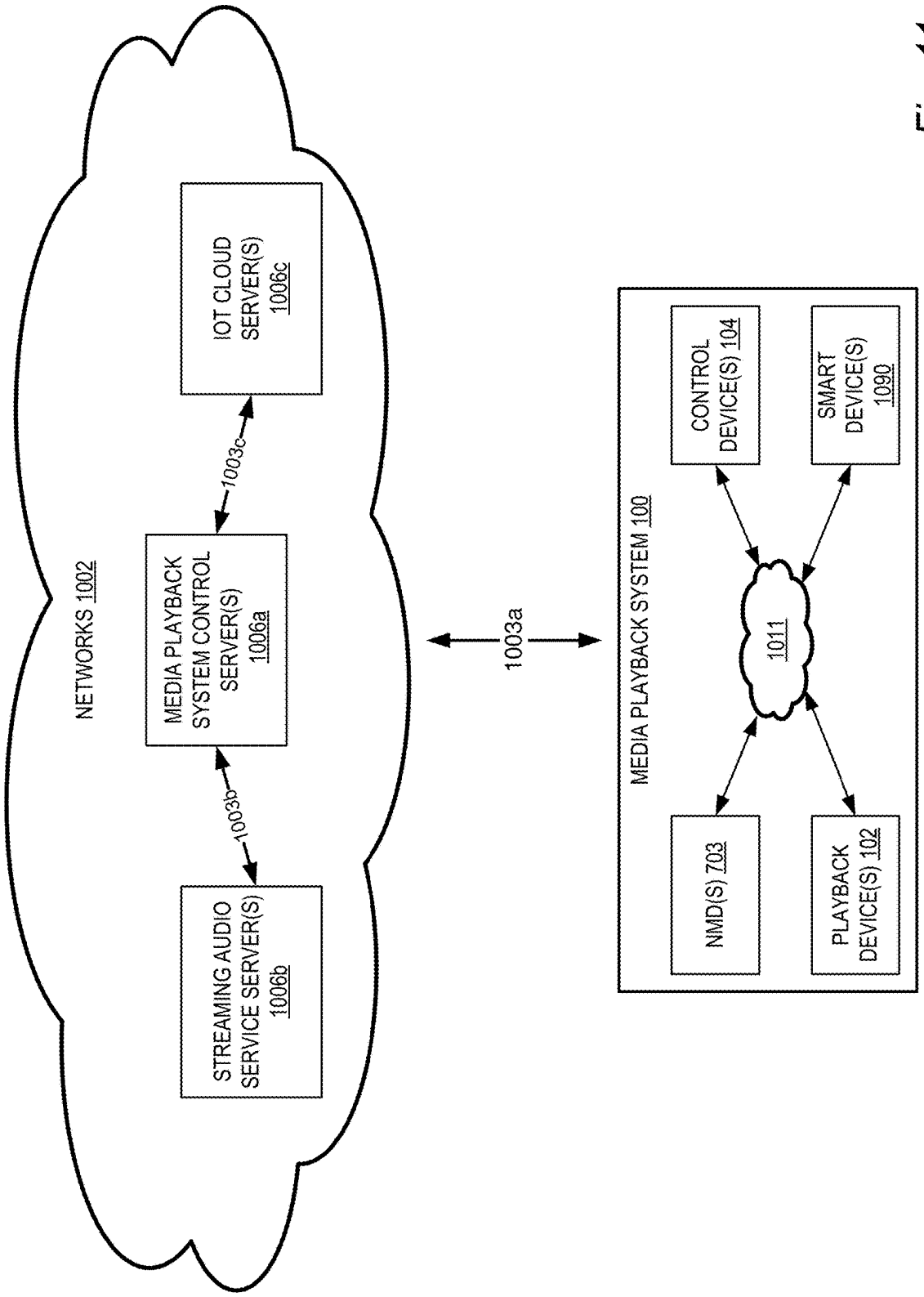
NETWORKS 1002
IOT CLOUD SERVER(S) 1006c
1003c
MEDIA PLAYBACK SYSTEM CONTROL SERVER(S) 1006a
1003b
STREAMING AUDIO SERVICE SERVER(S) 1006b
1003a
MEDIA PLAYBACK SYSTEM 100
CONTROL DEVICE(S) 104
SMART DEVICE(S) 1090
1011
NMD(S) 703
PLAYBACK DEVICE(S) 102

Fig. 11

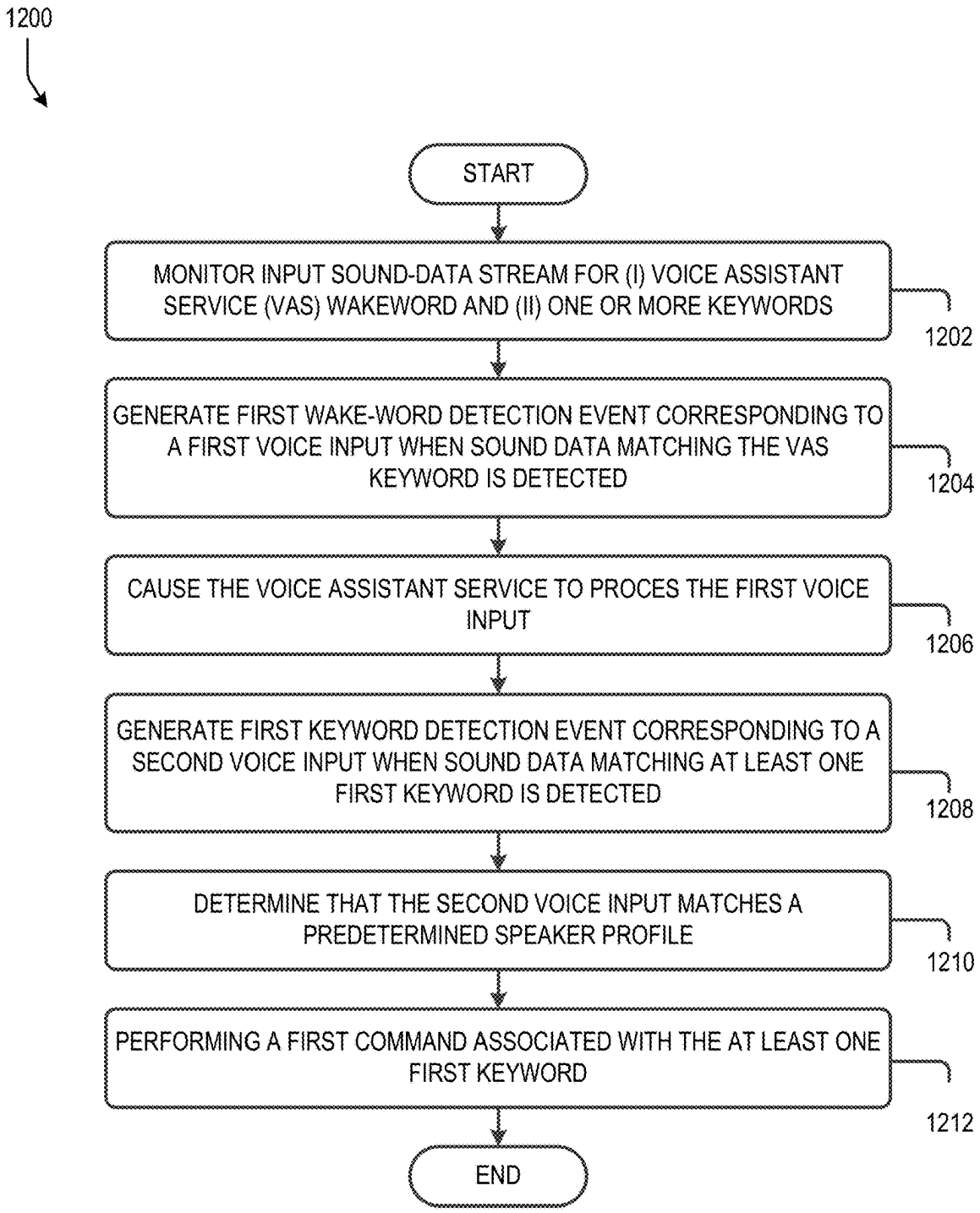
1200
START
MONITOR INPUT SOUND-DATA STREAM FOR (I) VOICE ASSISTANT SERVICE (VAS) WAKEWORD AND (II) ONE OR MORE KEYWORDS
1202
GENERATE FIRST WAKE-WORD DETECTION EVENT CORRESPONDING TO A FIRST VOICE INPUT WHEN SOUND DATA MATCHING THE VAS KEYWORD IS DETECTED
1204
CAUSE THE VOICE ASSISTANT SERVICE TO PROCES THE FIRST VOICE INPUT
1206
GENERATE FIRST KEYWORD DETECTION EVENT CORRESPONDING TO A SECOND VOICE INPUT WHEN SOUND DATA MATCHING AT LEAST ONE FIRST KEYWORD IS DETECTED
1208
DETERMINE THAT THE SECOND VOICE INPUT MATCHES A PREDETERMINED SPEAKER PROFILE
1210
PERFORMING A FIRST COMMAND ASSOCIATED WITH THE AT LEAST ONE FIRST KEYWORD
1212
END

Fig. 12

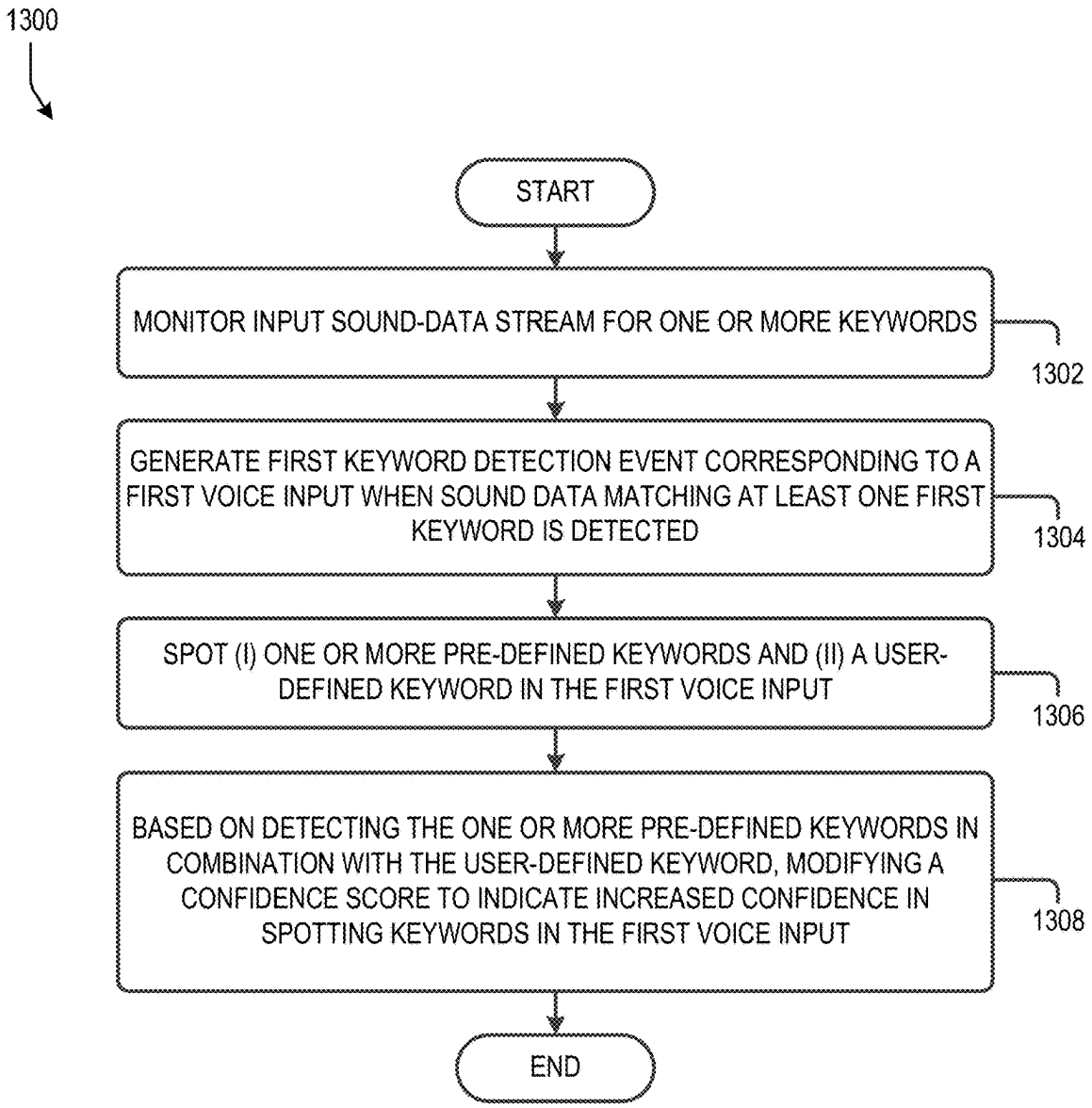
1300
START
MONITOR INPUT SOUND-DATA STREAM FOR ONE OR MORE KEYWORDS
1302
GENERATE FIRST KEYWORD DETECTION EVENT CORRESPONDING TO A FIRST VOICE INPUT WHEN SOUND DATA MATCHING AT LEAST ONE FIRST KEYWORD IS DETECTED
1304
SPOT (I) ONE OR MORE PRE-DEFINED KEYWORDS AND (II) A USER-DEFINED KEYWORD IN THE FIRST VOICE INPUT
1306
BASED ON DETECTING THE ONE OR MORE PRE-DEFINED KEYWORDS IN COMBINATION WITH THE USER-DEFINED KEYWORD, MODIFYING A CONFIDENCE SCORE TO INDICATE INCREASED CONFIDENCE IN SPOTTING KEYWORDS IN THE FIRST VOICE INPUT
1308
END

Fig. 13

WAKEWORDLESS VOICE QUICKSTARTS

CROSS-REFERENCE TO RELATED APPLICATIONS

This application claims priority to U.S. Patent Application Ser. No. 63/036,189, filed on Jun. 8, 2020, the disclosure of which is incorporated by reference herein in its entirety.

FIELD OF THE DISCLOSURE

The present technology relates to consumer goods and, more particularly, to methods, systems, products, features, services, and other elements directed to voice-assisted control of media playback systems or some aspect thereof.

BACKGROUND

Options for accessing and listening to digital audio in an out-loud setting were limited until in 2002, when SONOS, Inc. began development of a new type of playback system. Sonos then filed one of its first patent applications in 2003, entitled "Method for Synchronizing Audio Playback between Multiple Networked Devices," and began offering its first media playback systems for sale in 2005. The Sonos Wireless Home Sound System enables people to experience music from many sources via one or more networked playback devices. Through a software control application installed on a controller (e.g., smartphone, tablet, computer, voice input device), one can play what she wants in any room having a networked playback device. Media content (e.g., songs, podcasts, video sound) can be streamed to playback devices such that each room with a playback device can play back corresponding different media content. In addition, rooms can be grouped together for synchronous playback of the same media content, and/or the same media content can be heard in all rooms synchronously.

BRIEF DESCRIPTION OF THE DRAWINGS

Features, aspects, and advantages of the presently disclosed technology may be better understood with regard to the following description, appended claims, and accompanying drawings where:

Features, aspects, and advantages of the presently disclosed technology may be better understood with regard to the following description, appended claims, and accompanying drawings, as listed below. A person skilled in the relevant art will understand that the features shown in the drawings are for purposes of illustrations, and variations, including different and/or additional features and arrangements thereof, are possible.

FIG. **1**A is a partial cutaway view of an environment having a media playback system configured in accordance with aspects of the disclosed technology.

FIG. **1**B is a schematic diagram of the media playback system of FIG. **1**A and one or more networks.

FIG. **2**A is a functional block diagram of an example playback device.

FIG. **2**B is an isometric diagram of an example housing of the playback device of FIG. **2**A.

FIG. **2**C is a diagram of an example voice input.

FIG. **2**D is a graph depicting an example sound specimen in accordance with aspects of the disclosure.

FIGS. **3**A, **3**B, **3**C, **3**D and **3**E are diagrams showing example playback device configurations in accordance with aspects of the disclosure.

FIG. **4** is a functional block diagram of an example controller device in accordance with aspects of the disclosure.

FIGS. **5**A and **5**B are controller interfaces in accordance with aspects of the disclosure.

FIG. **6** is a message flow diagram of a media playback system.

FIG. **7**A is a functional block diagram of an example network microphone device.

FIG. **7**B is an isometric diagram of the example network microphone device.

FIG. **7**C is a functional block diagram of certain components of the example network microphone device in accordance with aspects of the disclosure.

FIG. **7**D is a functional block diagram of a neural architecture of the example network microphone device in accordance with aspects of the disclosure.

FIGS. **8**A, **8**B, **8**C, and **8**D illustrate example voice input processing sequences.

FIG. **9** is a schematic diagram illustrating the example network microphone device while paired with an example network device.

FIGS. **10**A and **10**B are controller interfaces in accordance with aspects of the disclosure.

FIG. **11** is a schematic diagram illustrating an example media playback system and cloud network in accordance with aspects of the disclosure.

FIG. **12** is a flow diagram of an example method to perform local voice control in accordance with aspects of the disclosure.

FIG. **13** is a flow diagram of an example method to perform local voice control in accordance with aspects of the disclosure.

The drawings are for purposes of illustrating example embodiments, but it should be understood that the inventions are not limited to the arrangements and instrumentality shown in the drawings. In the drawings, identical reference numbers identify at least generally similar elements. To facilitate the discussion of any particular element, the most significant digit or digits of any reference number refers to the Figure in which that element is first introduced. For example, element **103***a* is first introduced and discussed with reference to FIG. **1**A.

DETAILED DESCRIPTION

I. Overview

Examples described herein relate to local voice control techniques using a networked microphone device ("NMD"). A NMD is a networked computing device that typically includes an arrangement of microphones, such as a microphone array, that is configured to detect sound present in the NMD's environment. NMDs may facilitate voice control of smart home devices, such as wireless audio playback devices, illumination devices, appliances, and home-automation devices (e.g., thermostats, door locks, etc.). NMDs may also be used to query a cloud-based voice assistant service (VAS) for information such as search queries, news, weather, and the like.

In one aspect, a NMD may implement a small-footprint ("mini") spoken language understanding (SLU) pipeline. The mini-SLU pipeline derives intent of voice inputs by keyword spotting in natural language voice inputs. That is, the mini-SLU pipeline is configured to spot certain keywords, which correspond to respective commands. By spotting a particular keyword in a voice input, the mini-SLU

pipeline directly derives an intent to perform the command associated with the spotted keyword. Further, in contrast to other keyword spotting approaches, the mini-SLU pipeline does not implement full automatic speech recognition (ASR). Instead, the mini-SLU directly performs detection of keywords from intermediate representations of the voice input and keywords using a keyword spotting neural network.

More particularly, an example mini-SLU pipeline may implement a neural architecture with three components: an acoustic encoder, a convolutional keyword detector network, and an auxiliary keyword encoder network, which may be referred to together as a hybrid keyword detector. The acoustic encoder is composed of a stack of recurrent neural layers and is pre-trained to generate quantized intermediate features from conditioned data representing a natural language voice input. The intermediate features are input to the convolutional keyword detector network trained to output keyword confidences. To support custom keywords ("an open-vocabulary model"), the weights of the convolutional keyword detector network are not necessarily trained directly, but are instead predicted by the auxiliary keyword encoder network. The keyword encoder network is itself a neural network applied to a phone sequence of a keyword to predict the parameters of the convolutional keyword detector network that would detect the keyword.

In an effort to maintain a small footprint, the mini-SLU pipeline is trained to detect a relatively small set of keywords compared with a cloud-based VAS. In some implementations, this set of keywords may be task-based. For instance, a mini-SLU pipeline implemented in a playback device may be trained to detect keywords corresponding to playback commands such as "play," "pause," or "skip." As another example, a mini-SLU pipeline implemented in a washing machine may be trained to detect keywords such as "Start gentle cycle."

In exemplary NMDs, the mini-SLU pipeline is implemented in parallel with cloud-based processing of natural language voice inputs. Cloud-based processing may be significantly more capable than processing using the mini-SLU pipeline. For instance, the mini-SLU may be capable of recognizing 1,000 or fewer keywords (words and phrases) while a cloud-based VAS is capable of recognizing a wide variety of words and phrases. Such numbers are merely representative and will vary based on the specific implementations.

Additionally or alternatively, the mini-SLU pipeline is implemented in parallel with a local voice input engine. In contrast with the mini-SLU, the local voice input engine implements full ASR to convert sound data from the microphones to text and then performs spoken language understanding to combine command keywords with parameter keywords. ASR-based local processing may be relatively more capable than the mini-SLU pipeline (and likewise have a larger footprint than the mini-SLU pipeline). For instance, an ASR-based local voice input processing may be capable of recognizing 10,000 keywords (words or phrases) compared with 1,000 or fewer for a mini-SLU pipeline.

On the other hand, processing voice inputs via the mini-SLU pipeline may be relatively faster than other types of local and/or cloud processing. In particular, the mini-SLU pipeline may be relatively quicker due to various factors such as scope (i.e., attempting to detect a relatively small set of keywords), design (e.g., directly spotting keywords without first performing ASR), and architecture (e.g., no latency as inherent in cloud-based processing). Due to this relative speed in processing voice inputs, voice inputs processed via the mini-SLU pipeline may be referred to herein as "quick-starts."

To avoid duplicate processing of a voice input by the parallel voice processing pipelines, the mini-SLU pipeline may instruct or otherwise cause the other voice processing pipelines to forego or stop processing of a voice input when the mini-SLU pipeline successfully processes the voice input. On the other hand, if the mini-SLU pipeline is unable to process a voice input, that voice input may be processed by the ASR-based local voice input pipeline or the cloud-based VAS. At the same time, a user may request processing using a cloud-based VAS by pre-facing their voice input with a specific nonce wake word for that VAS. For example, a user might speak the wake word "Alexa" to invoke the AMAZON® VAS, "Ok, Google" to invoke the GOOGLE® VAS, "Hey, Siri" to invoke the APPLE® VAS, or "Hey, Sonos" to invoke a VAS offered by SONOS®, among other examples.

To identify whether sound detected by the NMD contains a voice input that includes a particular wake word, NMDs often utilize a wake-word engine, which is typically onboard the NMD. The wake-word engine may be configured to identify (i.e., "spot" or "detect") a particular wake word in recorded audio using one or more identification algorithms, which may include pattern recognition trained to detect the frequency and/or time domain patterns that speaking the wake word creates. In practice, a wake word is typically a pre-determined nonce word or phrase used to "wake up" an NMD and cause it to invoke a particular voice assistant service ("VAS") to interpret the intent of voice input in detected sound. Under this paradigm, when performing cloud-based voice processing, the NMD only needs to be able to detect a wake-word in a voice input—the heavy-lifting of voice processing (i.e., spoken language understanding) is offloaded to the cloud.

When a wake-word engine detects a wake word in recorded audio, the NMD may determine that a wake-word event (i.e., a "wake-word trigger") has occurred, which indicates that the NMD has detected sound that includes a potential voice input. The occurrence of the wake-word event typically causes the NMD to perform additional processes involving the detected sound. With a VAS wake-word engine, these additional processes may include extracting detected-sound data from a buffer, among other possible additional processes, such as outputting an alert (e.g., an audible chime and/or a light indicator) indicating that a wake word has been identified. Extracting the detected sound may include reading out and packaging a stream of the detected-sound according to a particular format and transmitting the packaged sound-data to an appropriate VAS for interpretation.

In turn, the VAS corresponding to the wake word that was identified by the wake-word engine receives the transmitted sound data from the NMD over a communication network. A VAS traditionally takes the form of a remote service implemented using one or more cloud servers configured to process voice inputs (e.g., AMAZON's ALEXA, APPLE's SIRI, MICROSOFT's CORTANA, GOOGLE'S ASSISTANT, etc.). In some instances, certain components and functionality of the VAS may be distributed across local and remote devices.

When a VAS receives detected-sound data, the VAS processes this data, which involves identifying the voice input and determining intent of words captured in the voice input. The VAS may then provide a response back to the NMD with some instruction according to the determined

intent. Based on that instruction, the NMD may cause one or more smart devices to perform an action. For example, in accordance with an instruction from a VAS, an NMD may cause a playback device to play a particular song or an illumination device to turn on/off, among other examples.

In contrast to a VAS wake-word engine, the mini SLU might not trigger based on nonce wake words and instead operate in a wakewordless paradigm. That is, the mini-SLU pipeline continually monitors data from the microphones for the keywords that it is trained to detect. Under this paradigm, a user may more quickly and naturally interact with the NMD without needing to preface their request with a nonce wake word. In this design, concern that NMDs are continually listening for these keywords is mitigated by the fact that the user's voice recordings are temporary and remain local to the user's device.

One challenge with traditional wake-word engines is that they can be prone to false positives caused by "false wake word" triggers. A false positive in the NMD context generally refers to detected sound input that erroneously invokes a VAS. With a VAS wake-work engine, a false positive may invoke the VAS, even though there is no user actually intending to speak a wake word to the NMD.

For example, a false positive can occur when a wake-word engine identifies a wake word in detected sound from audio (e.g., music, a podcast, TV, etc.) playing in the environment of the NMD. This output audio may be playing from a playback device in the vicinity of the NMD or by the NMD itself. For instance, when the audio of a commercial advertising AMAZON's ALEXA service is output in the vicinity of the NMD, the word "Alexa" in the commercial may trigger a false positive. A word or phrase in output audio that causes a false positive may be referred to herein as a "false wake word."

In other examples, words that are phonetically similar to an actual wake word cause false positives. For example, when the audio of a commercial advertising LEXUS® automobiles is output in the vicinity of the NMD, the word "Lexus" may be a false wake word that causes a false positive because this word is phonetically similar to "Alexa." As other examples, false positives may occur when a person speaks a VAS wake word or phonetically similar word in conversation.

The occurrences of false positives are undesirable, as they may cause the NMD to consume additional resources or interrupt audio playback, among other possible negative consequences. Some NMDs may avoid false positives by requiring a button press to invoke the VAS, such as on the AMAZON FIRETV remote or the APPLE TV remote. In practice, the impact of a false positive generated by a VAS wake-word engine is often partially mitigated by the VAS processing the detected-sound data and determining that the detected-sound data does not include a recognizable voice input.

A mini-SLU pipeline may be relatively more prone to false positive detections as compared with a VAS wake word engine. The mini-SLU pipeline is triggered based on a wider variety of words, including words that may be more commonly used in conversation (e.g., "play" "on", etc.) as compared with nonce wake words of a cloud-based VAS, which creates more opportunities for false positives. Second, unlike VAS wake word engines which can be trained on large sets of training data since the nonce wake words are known in advance, for at least some keywords (e.g., custom keywords), the keyword detector network is not trained directly, but instead relies on weights predicted by the keyword encoder network, which inherently produces less robust keyword detection.

To mitigate this propensity for false positives, after generating a keyword detection event when a given keyword is detected by a mini-SLU pipeline, an example NMD may require satisfaction of one or more conditions before performing a command associated with the detected keyword. In particular, these conditions may correspond with conditions that indicate likelihood that a detected keyword was intended by a user as a voice input. Accordingly, when these conditions are satisfied, the likelihood that the detected keyword is not a false positive is increased. Conversely, when these conditions are not satisfied, it is more likely that the detected keyword is a false positive.

In particular, one condition that may apply generally is whether the voice input matches a speaker profile corresponding to a particular user. Example NMDs may maintain or have access to pre-determined speaker profiles corresponding to the users in a household. When a voice input matches one of these pre-determined speaker profiles, confidence that the utterance was intended as a voice input to the NMD is increased.

For example, a particular user may set up a custom keyword such as "Party Time" to trigger a particular command or action (such as playback of a particular playlist across multiple (or all) playback devices in a household, as may be useful during a party). When the user utters the keyword "Party Time," the detecting NMD may recognize that the utterance includes that keyword and further determine that the speaker of the utterance is the particular user. Since the speaker of the custom keyword is the particular user who configured the keyword, the NMD can be more confident that the speaker intended that utterance as a voice input than the NMD would otherwise be without this determination.

Example local voice input processing pipelines such as the mini-SLU and the ASR-based local voice input pipeline, may support custom keywords. Relative to pre-loaded keywords, custom keywords may be relatively more difficult to spot, as the neural network(s) for keyword spotting in such pipelines may have been trained with relatively more training data for the pre-loaded keywords. Custom keywords might not have any particular training data at all; instead, the neural network weights used to detect custom keywords may be predicted by a keyword encoder.

Some example voice inputs may include both pre-loaded and custom keywords. For instance, when analyzing a voice input (e.g., "play the party time playlist"), the NMD may have relatively higher confidence in detecting a pre-loaded keyword (e.g., "play") and relatively lower confidence in detecting a custom keyword (e.g., "party time playlist"). In some examples, the NMD may assign a confidence value to the voice input as a whole based on the individual probabilities of detecting the constituent keywords.

Example local voice input processing pipelines such as the mini-SLU pipeline and the ASR-based local voice input pipeline may derive a greater confidence level in custom keywords based on detecting such keywords in a voice input with pre-loaded keywords. That is, when a pre-loaded keyword is detected in a voice input with relatively high confidence and a custom keyword is also detected in the voice input albeit with relatively low confidence, the NMD may assign a higher confidence to the voice input as a whole than would otherwise be assigned to a voice input with the constituent keywords. This functionality is based on this assumption that when the NMD has detected one or more

keywords with high confidence, other sounds in time proximity to those high-confidence keywords are more likely to be keywords as well.

As noted above, example techniques relate to wakeword-less local voice control. An example implementation involves a network microphone device (NMD) including one or more microphones, a network interface, one or more processors, at least one speaker, one or more processor and data storage having stored therein instructions executable by the one or more processors. The NMD monitors, via one or more keyword engines, an input sound-data stream representing sound detected by the one or more microphones for (i) a wake word associated with a voice assistant service and (ii) one or more keywords. The one or more keywords are different than the wake word. The NMD generates a first wake-word detection event corresponding to a first voice input when the one or more keyword engines detect sound data matching the wake word in the input sound-data stream. Based on generating the first wake-word detection event, the NMD causes the voice assistant service to process the first voice input. The NMD generates a first keyword detection event corresponding to a second voice input when the one or more keyword engines detect sound data matching at least one first keyword of the one or more keywords. The NMD determines that the second voice input matches a particular predetermined speaker profile of one or more predetermined speaker profiles and based on (i) generating the first keyword detection event and (ii) determining that the second voice input includes sound data matching the particular predetermined speaker profile, performs a particular playback command associated with the at least one first keyword.

Another example implementation involves a network microphone device (NMD) including one or more microphones, a network interface, one or more processors, at least one speaker, one or more processor and data storage having stored therein instructions executable by the one or more processors. The NMD monitors, via one or more keyword engines, an input sound-data stream representing sound detected by the one or more microphones for one or more keywords from a keyword library. The keyword library includes pre-defined keywords and user-defined keywords. The NMD generates a first keyword detection event corresponding to a first voice input when the one or more keyword engines detect sound data matching a first keyword from the keyword library in the input sound-data stream. The NMD performs automatic speech recognition on the first voice input to detect keywords from the keyword library in the first voice input. Performing automatic speech recognition on the first voice input includes detecting one or more pre-defined keywords from the keyword library in the first voice input, detecting a first user-defined keyword in the first voice input, and determining a confidence metric indicating confidence in recognizing keywords from the keyword library in the first voice input. Based on detecting the one or more pre-defined keywords in combination with the first user-defined keyword, the NMD modifies the confidence metric to indicate increased confidence in detecting keywords from the keyword library in the first voice input.

While some embodiments described herein may refer to functions performed by given actors, such as "users" and/or other entities, it should be understood that this description is for purposes of explanation only. The claims should not be interpreted to require action by any such example actor unless explicitly required by the language of the claims themselves.

Moreover, some functions are described herein as being performed "based on" or "in response to" another element or function. "Based on" should be understood that one element or function is related to another function or element. "In response to" should be understood that one element or function is a necessary result of another function or element. For the sake of brevity, functions are generally described as being based on another function when a functional link exists; however, such disclosure should be understood as disclosing either type of functional relationship.

II. Example Operation Environment

FIGS. **1**A and **1**B illustrate an example configuration of a media playback system **100** (or "MPS **100**") in which one or more embodiments disclosed herein may be implemented. Referring first to FIG. **1**A, the MPS **100** as shown is associated with an example home environment having a plurality of rooms and spaces, which may be collectively referred to as a "home environment," "smart home," or "environment **101**." The environment **101** comprises a household having several rooms, spaces, and/or playback zones, including a master bathroom **101***a*, a master bedroom **101***b*, (referred to herein as "Nick's Room"), a second bedroom **101***c*, a family room or den **101***d*, an office **101***e*, a living room **101***f*, a dining room **101***g*, a kitchen **101***h*, and an outdoor patio **101***i*. While certain embodiments and examples are described below in the context of a home environment, the technologies described herein may be implemented in other types of environments. In some embodiments, for example, the MPS **100** can be implemented in one or more commercial settings (e.g., a restaurant, mall, airport, hotel, a retail or other store), one or more vehicles (e.g., a sports utility vehicle, bus, car, a ship, a boat, an airplane), multiple environments (e.g., a combination of home and vehicle environments), and/or another suitable environment where multi-zone audio may be desirable.

Within these rooms and spaces, the MPS **100** includes one or more computing devices. Referring to FIGS. **1**A and **1**B together, such computing devices can include playback devices **102** (identified individually as playback devices **102***a*-**102***o*), network microphone devices **103** (identified individually as "NMDs" **103***a*-**102***i*), and controller devices **104***a* and **104***b* (collectively "controller devices **104**"). Referring to FIG. **1**B, the home environment may include additional and/or other computing devices, including local network devices, such as one or more smart illumination devices **108** (FIG. **1**B), a smart thermostat **110**, and a local computing device **105** (FIG. **1**A). In embodiments described below, one or more of the various playback devices **102** may be configured as portable playback devices, while others may be configured as stationary playback devices. For example, the headphones **102***o* (FIG. **1**B) are a portable playback device, while the playback device **102***d* on the bookcase may be a stationary device. As another example, the playback device **102***c* on the Patio may be a battery-powered device, which may allow it to be transported to various areas within the environment **101**, and outside of the environment **101**, when it is not plugged in to a wall outlet or the like.

With reference still to FIG. **1**B, the various playback, network microphone, and controller devices **102**, **103**, and **104** and/or other network devices of the MPS **100** may be coupled to one another via point-to-point connections and/or over other connections, which may be wired and/or wireless, via a network **111**, such as a LAN including a network router **109**. For example, the playback device **102***j* in the Den **101***d*

(FIG. **1**A), which may be designated as the "Left" device, may have a point-to-point connection with the playback device **102***a*, which is also in the Den **101***d* and may be designated as the "Right" device. In a related embodiment, the Left playback device **102***j* may communicate with other network devices, such as the playback device **102***b*, which may be designated as the "Front" device, via a point-to-point connection and/or other connections via the NETWORK **111**.

As further shown in FIG. **1**B, the MPS **100** may be coupled to one or more remote computing devices **106** via a wide area network ("WAN") **107**. In some embodiments, each remote computing device **106** may take the form of one or more cloud servers. The remote computing devices **106** may be configured to interact with computing devices in the environment **101** in various ways. For example, the remote computing devices **106** may be configured to facilitate streaming and/or controlling playback of media content, such as audio, in the home environment **101**.

In some implementations, the various playback devices, NMDs, and/or controller devices **102-104** may be communicatively coupled to at least one remote computing device associated with a VAS and at least one remote computing device associated with a media content service ("MCS"). For instance, in the illustrated example of FIG. **1**B, remote computing devices **106** are associated with a VAS **190** and remote computing devices **106***b* are associated with an MCS **192**. Although only a single VAS **190** and a single MCS **192** are shown in the example of FIG. **1**B for purposes of clarity, the MPS **100** may be coupled to multiple, different VASes and/or MCSes. In some implementations, VASes may be operated by one or more of AMAZON, GOOGLE, APPLE, MICROSOFT, SONOS or other voice assistant providers. In some implementations, MCSes may be operated by one or more of SPOTIFY, PANDORA, AMAZON MUSIC, or other media content services.

As further shown in FIG. **1**B, the remote computing devices **106** further include remote computing device **106***c* configured to perform certain operations, such as remotely facilitating media playback functions, managing device and system status information, directing communications between the devices of the MPS **100** and one or multiple VASes and/or MCSes, among other operations. In one example, the remote computing devices **106***c* provide cloud servers for one or more SONOS Wireless HiFi Systems.

In various implementations, one or more of the playback devices **102** may take the form of or include an on-board (e.g., integrated) network microphone device. For example, the playback devices **102***a-e* include or are otherwise equipped with corresponding NMDs **103***a-e*, respectively. A playback device that includes or is equipped with an NMD may be referred to herein interchangeably as a playback device or an NMD unless indicated otherwise in the description. In some cases, one or more of the NMDs **103** may be a stand-alone device. For example, the NMDs **103***f* and **103***g* may be stand-alone devices. A stand-alone NMD may omit components and/or functionality that is typically included in a playback device, such as a speaker or related electronics. For instance, in such cases, a stand-alone NMD may not produce audio output or may produce limited audio output (e.g., relatively low-quality audio output).

The various playback and network microphone devices **102** and **103** of the MPS **100** may each be associated with a unique name, which may be assigned to the respective devices by a user, such as during setup of one or more of these devices. For instance, as shown in the illustrated example of FIG. **1**B, a user may assign the name "Bookcase" to playback device **102***d* because it is physically situated on a bookcase. Similarly, the NMD **103***f* may be assigned the named "Island" because it is physically situated on an island countertop in the Kitchen **101***h* (FIG. **1**A). Some playback devices may be assigned names according to a zone or room, such as the playback devices **102***e*, **102***l*, **102***m*, and **102***n*, which are named "Bedroom," "Dining Room," "Living Room," and "Office," respectively. Further, certain playback devices may have functionally descriptive names. For example, the playback devices **102***a* and **102***b* are assigned the names "Right" and "Front," respectively, because these two devices are configured to provide specific audio channels during media playback in the zone of the Den **101***d* (FIG. **1**A). The playback device **102***c* in the Patio may be named portable because it is battery-powered and/or readily transportable to different areas of the environment **101**. Other naming conventions are possible.

As discussed above, an NMD may detect and process sound from its environment, such as sound that includes background noise mixed with speech spoken by a person in the NMD's vicinity. For example, as sounds are detected by the NMD in the environment, the NMD may process the detected sound to determine if the sound includes speech that contains voice input intended for the NMD and ultimately a particular VAS. For example, the NMD may identify whether speech includes a wake word associated with a particular VAS.

In the illustrated example of FIG. **1**B, the NMDs **103** are configured to interact with the VAS **190** over a network via the network **111** and the router **109**. Interactions with the VAS **190** may be initiated, for example, when an NMD identifies in the detected sound a potential wake word. The identification causes a wake-word event, which in turn causes the NMD to begin transmitting detected-sound data to the VAS **190**. In some implementations, the various local network devices **102-105** (FIG. **1**A) and/or remote computing devices **106***c* of the MPS **100** may exchange various feedback, information, instructions, and/or related data with the remote computing devices associated with the selected VAS. Such exchanges may be related to or independent of transmitted messages containing voice inputs. In some embodiments, the remote computing device(s) and the MPS **100** may exchange data via communication paths as described herein and/or using a metadata exchange channel as described in U.S. application Ser. No. 15/438,749 filed Feb. 21, 2017, and titled "Voice Control of a Media Playback System," which is herein incorporated by reference in its entirety.

Upon receiving the stream of sound data, the VAS **190** determines if there is voice input in the streamed data from the NMD, and if so the VAS **190** will also determine an underlying intent in the voice input. The VAS **190** may next transmit a response back to the MPS **100**, which can include transmitting the response directly to the NMD that caused the wake-word event. The response is typically based on the intent that the VAS **190** determined was present in the voice input. As an example, in response to the VAS **190** receiving a voice input with an utterance to "Play Hey Jude by The Beatles," the VAS **190** may determine that the underlying intent of the voice input is to initiate playback and further determine that intent of the voice input is to play the particular song "Hey Jude." After these determinations, the VAS **190** may transmit a command to a particular MCS **192** to retrieve content (i.e., the song "Hey Jude"), and that MCS **192**, in turn, provides (e.g., streams) this content directly to the MPS **100** or indirectly via the VAS **190**. In some

implementations, the VAS **190** may transmit to the MPS **100** a command that causes the MPS **100** itself to retrieve the content from the MCS **192**.

In certain implementations, NMDs may facilitate arbitration amongst one another when voice input is identified in speech detected by two or more NMDs located within proximity of one another. For example, the NMD-equipped playback device **102***d* in the environment **101** (FIG. **1**A) is in relatively close proximity to the NMD-equipped Living Room playback device **102***m*, and both devices **102***d* and **102***m* may at least sometimes detect the same sound. In such cases, this may require arbitration as to which device is ultimately responsible for providing detected-sound data to the remote VAS. Examples of arbitrating between NMDs may be found, for example, in previously referenced U.S. application Ser. No. 15/438,749.

In certain implementations, an NMD may be assigned to, or otherwise associated with, a designated or default playback device that may not include an NMD. For example, the Island NMD **103***f* in the Kitchen **101***h* (FIG. **1**A) may be assigned to the Dining Room playback device **102***l*, which is in relatively close proximity to the Island NMD **103***f*. In practice, an NMD may direct an assigned playback device to play audio in response to a remote VAS receiving a voice input from the NMD to play the audio, which the NMD might have sent to the VAS in response to a user speaking a command to play a certain song, album, playlist, etc. Additional details regarding assigning NMDs and playback devices as designated or default devices may be found, for example, in previously referenced U.S. patent application Ser. No. 15/438,749.

Further aspects relating to the different components of the example MPS **100** and how the different components may interact to provide a user with a media experience may be found in the following sections. While discussions herein may generally refer to the example MPS **100**, technologies described herein are not limited to applications within, among other things, the home environment described above. For instance, the technologies described herein may be useful in other home environment configurations comprising more or fewer of any of the playback, network microphone, and/or controller devices **102-104**. For example, the technologies herein may be utilized within an environment having a single playback device **102** and/or a single NMD **103**. In some examples of such cases, the NETWORK **111** (FIG. **1**B) may be eliminated and the single playback device **102** and/or the single NMD **103** may communicate directly with the remote computing devices **106**-*d*. In some embodiments, a telecommunication network (e.g., an LTE network, a 5G network, etc.) may communicate with the various playback, network microphone, and/or controller devices **102-104** independent of a LAN.

a. Example Playback & Network Microphone Devices

FIG. **2**A is a functional block diagram illustrating certain aspects of one of the playback devices **102** of the MPS **100** of FIGS. **1**A and **1**B. As shown, the playback device **102** includes various components, each of which is discussed in further detail below, and the various components of the playback device **102** may be operably coupled to one another via a system bus, communication network, or some other connection mechanism. In the illustrated example of FIG. **2**A, the playback device **102** may be referred to as an "NMD-equipped" playback device because it includes components that support the functionality of an NMD, such as one of the NMDs **103** shown in FIG. **1**A.

As shown, the playback device **102** includes at least one processor **212**, which may be a clock-driven computing component configured to process input data according to instructions stored in memory **213**. The memory **213** may be a tangible, non-transitory, computer-readable medium configured to store instructions that are executable by the processor **212**. For example, the memory **213** may be data storage that can be loaded with software code **214** that is executable by the processor **212** to achieve certain functions.

In one example, these functions may involve the playback device **102** retrieving audio data from an audio source, which may be another playback device. In another example, the functions may involve the playback device **102** sending audio data, detected-sound data (e.g., corresponding to a voice input), and/or other information to another device on a network via at least one network interface **224**. In yet another example, the functions may involve the playback device **102** causing one or more other playback devices to synchronously playback audio with the playback device **102**. In yet a further example, the functions may involve the playback device **102** facilitating being paired or otherwise bonded with one or more other playback devices to create a multi-channel audio environment. Numerous other example functions are possible, some of which are discussed below.

As just mentioned, certain functions may involve the playback device **102** synchronizing playback of audio content with one or more other playback devices. During synchronous playback, a listener may not perceive time-delay differences between playback of the audio content by the synchronized playback devices. U.S. Pat. No. 8,234,395 filed on Apr. 4, 2004, and titled "System and method for synchronizing operations among a plurality of independently clocked digital data processing devices," which is hereby incorporated by reference in its entirety, provides in more detail some examples for audio playback synchronization among playback devices.

To facilitate audio playback, the playback device **102** includes audio processing components **216** that are generally configured to process audio prior to the playback device **102** rendering the audio. In this respect, the audio processing components **216** may include one or more digital-to-analog converters ("DAC"), one or more audio preprocessing components, one or more audio enhancement components, one or more digital signal processors ("DSPs"), and so on. In some implementations, one or more of the audio processing components **216** may be a subcomponent of the processor **212**. In operation, the audio processing components **216** receive analog and/or digital audio and process and/or otherwise intentionally alter the audio to produce audio signals for playback.

The produced audio signals may then be provided to one or more audio amplifiers **217** for amplification and playback through one or more speakers **218** operably coupled to the amplifiers **217**. The audio amplifiers **217** may include components configured to amplify audio signals to a level for driving one or more of the speakers **218**.

Each of the speakers **218** may include an individual transducer (e.g., a "driver") or the speakers **218** may include a complete speaker system involving an enclosure with one or more drivers. A particular driver of a speaker **218** may include, for example, a subwoofer (e.g., for low frequencies), a mid-range driver (e.g., for middle frequencies), and/or a tweeter (e.g., for high frequencies). In some cases, a transducer may be driven by an individual corresponding audio amplifier of the audio amplifiers **217**. In some implementations, a playback device may not include the speakers **218**, but instead may include a speaker interface for connecting the playback device to external speakers. In certain embodiments, a playback device may include neither the

speakers **218** nor the audio amplifiers **217**, but instead may include an audio interface (not shown) for connecting the playback device to an external audio amplifier or audio-visual receiver.

In addition to producing audio signals for playback by the playback device **102**, the audio processing components **216** may be configured to process audio to be sent to one or more other playback devices, via the network interface **224**, for playback. In example scenarios, audio content to be processed and/or played back by the playback device **102** may be received from an external source, such as via an audio line-in interface (e.g., an auto-detecting 3.5 mm audio line-in connection) of the playback device **102** (not shown) or via the network interface **224**, as described below.

As shown, the at least one network interface **224**, may take the form of one or more wireless interfaces **225** and/or one or more wired interfaces **226**. A wireless interface may provide network interface functions for the playback device **102** to wirelessly communicate with other devices (e.g., other playback device(s), NMD(s), and/or controller device(s)) in accordance with a communication protocol (e.g., any wireless standard including IEEE 802.11a, 802.11b, 802.11g, 802.11n, 802.11ac, 802.15, 4G mobile communication standard, and so on). A wired interface may provide network interface functions for the playback device **102** to communicate over a wired connection with other devices in accordance with a communication protocol (e.g., IEEE 802.3). While the network interface **224** shown in FIG. **2**A includes both wired and wireless interfaces, the playback device **102** may in some implementations include only wireless interface(s) or only wired interface(s).

In general, the network interface **224** facilitates data flow between the playback device **102** and one or more other devices on a data network. For instance, the playback device **102** may be configured to receive audio content over the data network from one or more other playback devices, network devices within a LAN, and/or audio content sources over a WAN, such as the Internet. In one example, the audio content and other signals transmitted and received by the playback device **102** may be transmitted in the form of digital packet data comprising an Internet Protocol (IP)-based source address and IP-based destination addresses. In such a case, the network interface **224** may be configured to parse the digital packet data such that the data destined for the playback device **102** is properly received and processed by the playback device **102**.

As shown in FIG. **2**A, the playback device **102** also includes voice processing components **220** that are operably coupled to one or more microphones **222**. The microphones **222** are configured to detect sound (i.e., acoustic waves) in the environment of the playback device **102**, which is then provided to the voice processing components **220**. More specifically, each microphone **222** is configured to detect sound and convert the sound into a digital or analog signal representative of the detected sound, which can then cause the voice processing component **220** to perform various functions based on the detected sound, as described in greater detail below. In one implementation, the microphones **222** are arranged as an array of microphones (e.g., an array of six microphones). In some implementations, the playback device **102** includes more than six microphones (e.g., eight microphones or twelve microphones) or fewer than six microphones (e.g., four microphones, two microphones, or a single microphone).

In operation, the voice-processing components **220** are generally configured to detect and process sound received via the microphones **222**, identify potential voice input in the detected sound, and extract detected-sound data to enable a VAS, such as the VAS **190** (FIG. **1**B), to process voice input identified in the detected-sound data. The voice processing components **220** may include one or more analog-to-digital converters, an acoustic echo canceller ("AEC"), a spatial processor (e.g., one or more multi-channel Wiener filters, one or more other filters, and/or one or more beam former components), one or more buffers (e.g., one or more circular buffers), one or more wake-word engines, one or more voice extractors, and/or one or more speech processing components (e.g., components configured to recognize a voice of a particular user or a particular set of users associated with a household), among other example voice processing components. In example implementations, the voice processing components **220** may include or otherwise take the form of one or more DSPs or one or more modules of a DSP. In this respect, certain voice processing components **220** may be configured with particular parameters (e.g., gain and/or spectral parameters) that may be modified or otherwise tuned to achieve particular functions. In some implementations, one or more of the voice processing components **220** may be a subcomponent of the processor **212**.

As further shown in FIG. **2**A, the playback device **102** also includes power components **227**. The power components **227** include at least an external power source interface **228**, which may be coupled to a power source (not shown) via a power cable or the like that physically connects the playback device **102** to an electrical outlet or some other external power source. Other power components may include, for example, transformers, converters, and like components configured to format electrical power.

In some implementations, the power components **227** of the playback device **102** may additionally include an internal power source **229** (e.g., one or more batteries) configured to power the playback device **102** without a physical connection to an external power source. When equipped with the internal power source **229**, the playback device **102** may operate independent of an external power source. In some such implementations, the external power source interface **228** may be configured to facilitate charging the internal power source **229**. As discussed before, a playback device comprising an internal power source may be referred to herein as a "portable playback device." On the other hand, a playback device that operates using an external power source may be referred to herein as a "stationary playback device," although such a device may in fact be moved around a home or other environment.

The playback device **102** further includes a user interface **240** that may facilitate user interactions independent of or in conjunction with user interactions facilitated by one or more of the controller devices **104**. In various embodiments, the user interface **240** includes one or more physical buttons and/or supports graphical interfaces provided on touch sensitive screen(s) and/or surface(s), among other possibilities, for a user to directly provide input. The user interface **240** may further include one or more of lights (e.g., LEDs) and the speakers to provide visual and/or audio feedback to a user.

As an illustrative example, FIG. **2**B shows an example housing **230** of the playback device **102** that includes a user interface in the form of a control area **232** at a top portion **234** of the housing **230**. The control area **232** includes buttons **236***a-c* for controlling audio playback, volume level, and other functions. The control area **232** also includes a button **236***d* for toggling the microphones **222** to either an on state or an off state.

As further shown in FIG. **2**B, the control area **232** is at least partially surrounded by apertures formed in the top portion **234** of the housing **230** through which the microphones **222** (not visible in FIG. **2**B) receive the sound in the environment of the playback device **102**. The microphones **222** may be arranged in various positions along and/or within the top portion **234** or other areas of the housing **230** so as to detect sound from one or more directions relative to the playback device **102**.

By way of illustration, SONOS, Inc. presently offers (or has offered) for sale certain playback devices that may implement certain of the embodiments disclosed herein, including a "PLAY:1," "PLAY:3," "PLAY:5," "PLAYBAR," "CONNECT:AMP," "PLAYBASE," "BEAM," "CONNECT," and "SUB." Any other past, present, and/or future playback devices may additionally or alternatively be used to implement the playback devices of example embodiments disclosed herein. Additionally, it should be understood that a playback device is not limited to the examples illustrated in FIG. **2**A or **2**B or to the SONOS product offerings. For example, a playback device may include, or otherwise take the form of, a wired or wireless headphone set, which may operate as a part of the MPS **100** via a network interface or the like. In another example, a playback device may include or interact with a docking station for personal mobile media playback devices. In yet another example, a playback device may be integral to another device or component such as a television, a lighting fixture, or some other device for indoor or outdoor use.

FIG. **2**C is a diagram of an example voice input **280** that may be processed by an NMD or an NMD-equipped playback device. The voice input **280** may include a keyword portion **280***a* and an utterance portion **280***b*. The keyword portion **280***a* may include a wake word or a local keyword.

In the case of a wake word, the keyword portion **280***a* corresponds to detected sound that caused a VAS wake-word event. In practice, a wake word is typically a predetermined nonce word or phrase used to "wake up" an NMD and cause it to invoke a particular voice assistant service ("VAS") to interpret the intent of voice input in detected sound. For example, a user might speak the wake word "Alexa" to invoke the AMAZON® VAS, "Ok, Google" to invoke the GOOGLE® VAS, or "Hey, Siri" to invoke the APPLE® VAS, among other examples. In practice, a wake word may also be referred to as, for example, an activation-, trigger-, wakeup-word or -phrase, and may take the form of any suitable word, combination of words (e.g., a particular phrase), and/or some other audio cue.

The utterance portion **280***b* corresponds to detected sound that potentially comprises a user request following the keyword portion **280***a*. An utterance portion **280***b* can be processed to identify the presence of any words in detected-sound data by the NMD in response to the event caused by the keyword portion **280***a*. In various implementations, an underlying intent can be determined based on the words in the utterance portion **280***b*. In certain implementations, an underlying intent can also be based or at least partially based on certain words in the keyword portion **280***a*, such as when keyword portion includes a command keyword. In any case, the words may correspond to one or more commands, as well as a certain command and certain keywords.

A keyword in the voice utterance portion **280***b* may be, for example, a word identifying a particular device or group in the MPS **100**. For instance, in the illustrated example, the keywords in the voice utterance portion **280***b* may be one or more words identifying one or more zones in which the music is to be played, such as the Living Room and the Dining Room (FIG. **1**A). In some cases, the utterance portion **280***b* may include additional information, such as detected pauses (e.g., periods of non-speech) between words spoken by a user, as shown in FIG. **2**C. The pauses may demarcate the locations of separate commands, keywords, or other information spoke by the user within the utterance portion **280***b*.

Based on certain command criteria, the NMD and/or a remote VAS may take actions as a result of identifying one or more commands in the voice input. Command criteria may be based on the inclusion of certain keywords within the voice input, among other possibilities. Additionally, AMAstate and/or zone-state variables in conjunction with identification of one or more particular commands. Control-state variables may include, for example, indicators identifying a level of volume, a queue associated with one or more devices, and playback state, such as whether devices are playing a queue, paused, etc. Zone-state variables may include, for example, indicators identifying which, if any, zone players are grouped.

In some implementations, the MPS **100** is configured to temporarily reduce the volume of audio content that it is playing upon detecting a certain keyword, such as a wake word, in the keyword portion **280***a*. The MPS **100** may restore the volume after processing the voice input **280**. Such a process can be referred to as ducking, examples of which are disclosed in U.S. patent application Ser. No. 15/438,749, incorporated by reference herein in its entirety.

FIG. **2**D shows an example sound specimen. In this example, the sound specimen corresponds to the sound-data stream (e.g., one or more audio frames) associated with a spotted wake word or command keyword in the keyword portion **280***a* of FIG. **2**A. As illustrated, the example sound specimen comprises sound detected in an NMD's environment (i) immediately before a wake or command word was spoken, which may be referred to as a pre-roll portion (between times t_0 and t_1), (ii) while a wake or command word was spoken, which may be referred to as a wake-meter portion (between times t_1 and t_2), and/or (iii) after the wake or command word was spoken, which may be referred to as a post-roll portion (between times t_2 and t_3). Other sound specimens are also possible. In various implementations, aspects of the sound specimen can be evaluated according to an acoustic model which aims to map mels/spectral features to phonemes in a given language model for further processing. For example, automatic speech recognition (ASR) may include such mapping for command-keyword detection. Wake-word detection engines, by contrast, may be precisely tuned to identify a specific wake-word, and a downstream action of invoking a VAS (e.g., by targeting only nonce words in the voice input processed by the playback device).

ASR for local keyword detection may be tuned to accommodate a wide range of keywords (e.g., 5, 10, 100, 1,000, 10,000 keywords). Local keyword detection, in contrast to wake-word detection, may involve feeding ASR output to an onboard, local NLU which together with the ASR determine when local keyword events have occurred. In some implementations described below, the local NLU may determine an intent based on one or more keywords in the ASR output produced by a particular voice input. In these or other implementations, a playback device may act on a detected command keyword event only when the playback devices determine that certain conditions have been met, such as environmental conditions (e.g., low background noise).

b. Example Playback Device Configurations

FIGS. **3**A-**3**E show example configurations of playback devices. Referring first to FIG. **3**A, in some example

instances, a single playback device may belong to a zone. For example, the playback device **102***c* (FIG. **1**A) on the Patio may belong to Zone A. In some implementations described below, multiple playback devices may be "bonded" to form a "bonded pair," which together form a single zone. For example, the playback device **102***f* (FIG. **1**A) named "Bed **1**" in FIG. **3**A may be bonded to the playback device **102***g* (FIG. **1**A) named "Bed **2**" in FIG. **3**A to form Zone B. Bonded playback devices may have different playback responsibilities (e.g., channel responsibilities). In another implementation described below, multiple playback devices may be merged to form a single zone. For example, the playback device **102***d* named "Bookcase" may be merged with the playback device **102***m* named "Living Room" to form a single Zone C. The merged playback devices **102***d* and **102***m* may not be specifically assigned different playback responsibilities. That is, the merged playback devices **102***d* and **102***m* may, aside from playing audio content in synchrony, each play audio content as they would if they were not merged.

For purposes of control, each zone in the MPS **100** may be represented as a single user interface ("UI") entity. For example, as displayed by the controller devices **104**, Zone A may be provided as a single entity named "Portable," Zone B may be provided as a single entity named "Stereo," and Zone C may be provided as a single entity named "Living Room."

In various embodiments, a zone may take on the name of one of the playback devices belonging to the zone. For example, Zone C may take on the name of the Living Room device **102***m* (as shown). In another example, Zone C may instead take on the name of the Bookcase device **102***d*. In a further example, Zone C may take on a name that is some combination of the Bookcase device **102***d* and Living Room device **102***m*. The name that is chosen may be selected by a user via inputs at a controller device **104**. In some embodiments, a zone may be given a name that is different than the device(s) belonging to the zone. For example, Zone B in FIG. **3**A is named "Stereo" but none of the devices in Zone B have this name. In one aspect, Zone B is a single UI entity representing a single device named "Stereo," composed of constituent devices "Bed **1**" and "Bed **2**." In one implementation, the Bed **1** device may be playback device **102***f* in the master bedroom **101***h* (FIG. **1**A) and the Bed **2** device may be the playback device **102***g* also in the master bedroom **101***h* (FIG. **1**A).

As noted above, playback devices that are bonded may have different playback responsibilities, such as playback responsibilities for certain audio channels. For example, as shown in FIG. **3**B, the Bed **1** and Bed **2** devices **102***f* and **102***g* may be bonded so as to produce or enhance a stereo effect of audio content. In this example, the Bed **1** playback device **102***f* may be configured to play a left channel audio component, while the Bed **2** playback device **102***g* may be configured to play a right channel audio component. In some implementations, such stereo bonding may be referred to as "pairing."

Additionally, playback devices that are configured to be bonded may have additional and/or different respective speaker drivers. As shown in FIG. **3**C, the playback device **102***b* named "Front" may be bonded with the playback device **102***k* named "SUB." The Front device **102***b* may render a range of mid to high frequencies, and the SUB device **102***k* may render low frequencies as, for example, a subwoofer. When unbonded, the Front device **102***b* may be configured to render a full range of frequencies. As another example, FIG. **3**D shows the Front and SUB devices **102***b* and **102***k* further bonded with Right and Left playback devices **102***a* and **102***j*, respectively. In some implementations, the Right and Left devices **102***a* and **102***j* may form surround or "satellite" channels of a home theater system. The bonded playback devices **102***a*, **102***b*, **102***j*, and **102***k* may form a single Zone D (FIG. **3**A).

In some implementations, playback devices may also be "merged." In contrast to certain bonded playback devices, playback devices that are merged may not have assigned playback responsibilities, but may each render the full range of audio content that each respective playback device is capable of. Nevertheless, merged devices may be represented as a single UI entity (i.e., a zone, as discussed above). For instance, FIG. **3**E shows the playback devices **102***d* and **102***m* in the Living Room merged, which would result in these devices being represented by the single UI entity of Zone C. In one embodiment, the playback devices **102***d* and **102***m* may playback audio in synchrony, during which each outputs the full range of audio content that each respective playback device **102***d* and **102***m* is capable of rendering.

In some embodiments, a stand-alone NMD may be in a zone by itself. For example, the NMD **103***h* from FIG. **1**A is named "Closet" and forms Zone I in FIG. **3**A. An NMD may also be bonded or merged with another device so as to form a zone. For example, the NMD device **103***f* named "Island" may be bonded with the playback device **102***i* Kitchen, which together form Zone F, which is also named "Kitchen." Additional details regarding assigning NMDs and playback devices as designated or default devices may be found, for example, in previously referenced U.S. patent application Ser. No. 15/438,749. In some embodiments, a stand-alone NMD may not be assigned to a zone.

Zones of individual, bonded, and/or merged devices may be arranged to form a set of playback devices that playback audio in synchrony. Such a set of playback devices may be referred to as a "group," "zone group," "synchrony group," or "playback group." In response to inputs provided via a controller device **104**, playback devices may be dynamically grouped and ungrouped to form new or different groups that synchronously play back audio content. For example, referring to FIG. **3**A, Zone A may be grouped with Zone B to form a zone group that includes the playback devices of the two zones. As another example, Zone A may be grouped with one or more other Zones C-I. The Zones A-I may be grouped and ungrouped in numerous ways. For example, three, four, five, or more (e.g., all) of the Zones A-I may be grouped. When grouped, the zones of individual and/or bonded playback devices may play back audio in synchrony with one another, as described in previously referenced U.S. Pat. No. 8,234,395. Grouped and bonded devices are example types of associations between portable and stationary playback devices that may be caused in response to a trigger event, as discussed above and described in greater detail below.

In various implementations, the zones in an environment may be assigned a particular name, which may be the default name of a zone within a zone group or a combination of the names of the zones within a zone group, such as "Dining Room+Kitchen," as shown in FIG. **3**A. In some embodiments, a zone group may be given a unique name selected by a user, such as "Nick's Room," as also shown in FIG. **3**A. The name "Nick's Room" may be a name chosen by a user over a prior name for the zone group, such as the room name "Master Bedroom."

Referring back to FIG. **2**A, certain data may be stored in the memory **213** as one or more state variables that are periodically updated and used to describe the state of a

playback zone, the playback device(s), and/or a zone group associated therewith. The memory **213** may also include the data associated with the state of the other devices of the MPS **100**, which may be shared from time to time among the devices so that one or more of the devices have the most recent data associated with the system.

In some embodiments, the memory **213** of the playback device **102** may store instances of various variable types associated with the states. Variables instances may be stored with identifiers (e.g., tags) corresponding to type. For example, certain identifiers may be a first type "a1" to identify playback device(s) of a zone, a second type "b1" to identify playback device(s) that may be bonded in the zone, and a third type "c1" to identify a zone group to which the zone may belong. As a related example, in FIG. **1**A, identifiers associated with the Patio may indicate that the Patio is the only playback device of a particular zone and not in a zone group. Identifiers associated with the Living Room may indicate that the Living Room is not grouped with other zones but includes bonded playback devices **102***a*, **102***b*, **102***j*, and **102***k*. Identifiers associated with the Dining Room may indicate that the Dining Room is part of Dining Room+Kitchen group and that devices **103***f* and **102***i* are bonded. Identifiers associated with the Kitchen may indicate the same or similar information by virtue of the Kitchen being part of the Dining Room+Kitchen zone group. Other example zone variables and identifiers are described below.

In yet another example, the MPS **100** may include variables or identifiers representing other associations of zones and zone groups, such as identifiers associated with Areas, as shown in FIG. **3**A. An Area may involve a cluster of zone groups and/or zones not within a zone group. For instance, FIG. **3**A shows a first area named "First Area" and a second area named "Second Area." The First Area includes zones and zone groups of the Patio, Den, Dining Room, Kitchen, and Bathroom. The Second Area includes zones and zone groups of the Bathroom, Nick's Room, Bedroom, and Living Room. In one aspect, an Area may be used to invoke a cluster of zone groups and/or zones that share one or more zones and/or zone groups of another cluster. In this respect, such an Area differs from a zone group, which does not share a zone with another zone group. Further examples of techniques for implementing Areas may be found, for example, in U.S. application Ser. No. 15/682,506 filed Aug. 21, 2017, and titled "Room Association Based on Name," and U.S. Pat. No. 8,483,853 filed Sep. 11, 2007, and titled "Controlling and manipulating groupings in a multi-zone media system." Each of these applications is incorporated herein by reference in its entirety. In some embodiments, the MPS **100** may not implement Areas, in which case the system may not store variables associated with Areas.

The memory **213** may be further configured to store other data. Such data may pertain to audio sources accessible by the playback device **102** or a playback queue that the playback device (or some other playback device(s)) may be associated with. In embodiments described below, the memory **213** is configured to store a set of command data for selecting a particular VAS when processing voice inputs. During operation, one or more playback zones in the environment of FIG. **1**A may each be playing different audio content. For instance, the user may be grilling in the Patio zone and listening to hip hop music being played by the playback device **102***c*, while another user may be preparing food in the Kitchen zone and listening to classical music being played by the playback device **102***i*. In another example, a playback zone may play the same audio content in synchrony with another playback zone.

For instance, the user may be in the Office zone where the playback device **102***n* is playing the same hip-hop music that is being played by playback device **102***c* in the Patio zone. In such a case, playback devices **102***c* and **102***n* may be playing the hip-hop in synchrony such that the user may seamlessly (or at least substantially seamlessly) enjoy the audio content that is being played out-loud while moving between different playback zones. Synchronization among playback zones may be achieved in a manner similar to that of synchronization among playback devices, as described in previously referenced U.S. Pat. No. 8,234,395.

As suggested above, the zone configurations of the MPS **100** may be dynamically modified. As such, the MPS **100** may support numerous configurations. For example, if a user physically moves one or more playback devices to or from a zone, the MPS **100** may be reconfigured to accommodate the change(s). For instance, if the user physically moves the playback device **102***c* from the Patio zone to the Office zone, the Office zone may now include both the playback devices **102***c* and **102***n*. In some cases, the user may pair or group the moved playback device **102***c* with the Office zone and/or rename the players in the Office zone using, for example, one of the controller devices **104** and/or voice input. As another example, if one or more playback devices **102** are moved to a particular space in the home environment that is not already a playback zone, the moved playback device(s) may be renamed or associated with a playback zone for the particular space.

Further, different playback zones of the MPS **100** may be dynamically combined into zone groups or split up into individual playback zones. For example, the Dining Room zone and the Kitchen zone may be combined into a zone group for a dinner party such that playback devices **102***i* and **102***l* may render audio content in synchrony. As another example, bonded playback devices in the Den zone may be split into (i) a television zone and (ii) a separate listening zone. The television zone may include the Front playback device **102***b*. The listening zone may include the Right, Left, and SUB playback devices **102***a*, **102***j*, and **102***k*, which may be grouped, paired, or merged, as described above. Splitting the Den zone in such a manner may allow one user to listen to music in the listening zone in one area of the living room space, and another user to watch the television in another area of the living room space. In a related example, a user may utilize either of the NMD **103***a* or **103***b* (FIG. **1**B) to control the Den zone before it is separated into the television zone and the listening zone. Once separated, the listening zone may be controlled, for example, by a user in the vicinity of the NMD **103***a*, and the television zone may be controlled, for example, by a user in the vicinity of the NMD **103***b*. As described above, however, any of the NMDs **103** may be configured to control the various playback and other devices of the MPS **100**.

c. Example Controller Devices

FIG. **4** is a functional block diagram illustrating certain aspects of a selected one of the controller devices **104** of the MPS **100** of FIG. **1**A. Such controller devices may also be referred to herein as a "control device" or "controller." The controller device shown in FIG. **4** may include components that are generally similar to certain components of the network devices described above, such as a processor **412**, memory **413** storing program software **414**, at least one network interface **424**, and one or more microphones **422**. In one example, a controller device may be a dedicated controller for the MPS **100**. In another example, a controller device may be a network device on which media playback system controller application software may be installed,

such as for example, an iPhone™, iPad™ or any other smart phone, tablet, or network device (e.g., a networked computer such as a PC or Mac™).

The memory **413** of the controller device **104** may be configured to store controller application software and other data associated with the MPS **100** and/or a user of the system **100**. The memory **413** may be loaded with instructions in software **414** that are executable by the processor **412** to achieve certain functions, such as facilitating user access, control, and/or configuration of the MPS **100**. The controller device **104** is configured to communicate with other network devices via the network interface **424**, which may take the form of a wireless interface, as described above.

In one example, system information (e.g., such as a state variable) may be communicated between the controller device **104** and other devices via the network interface **424**. For instance, the controller device **104** may receive playback zone and zone group configurations in the MPS **100** from a playback device, an NMD, or another network device. Likewise, the controller device **104** may transmit such system information to a playback device or another network device via the network interface **424**. In some cases, the other network device may be another controller device.

The controller device **104** may also communicate playback device control commands, such as volume control and audio playback control, to a playback device via the network interface **424**. As suggested above, changes to configurations of the MPS **100** may also be performed by a user using the controller device **104**. The configuration changes may include adding/removing one or more playback devices to/from a zone, adding/removing one or more zones to/from a zone group, forming a bonded or merged player, separating one or more playback devices from a bonded or merged player, among others.

As shown in FIG. **4**, the controller device **104** also includes a user interface **440** that is generally configured to facilitate user access and control of the MPS **100**. The user interface **440** may include a touch-screen display or other physical interface configured to provide various graphical controller interfaces, such as the controller interfaces **540***a* and **540***b* shown in FIGS. **5**A and **5**B. Referring to FIGS. **5**A and **5**B together, the controller interfaces **540***a* and **540***b* includes a playback control region **542**, a playback zone region **543**, a playback status region **544**, a playback queue region **546**, and a sources region **548**. The user interface as shown is just one example of an interface that may be provided on a network device, such as the controller device shown in FIG. **4**, and accessed by users to control a media playback system, such as the MPS **100**. Other user interfaces of varying formats, styles, and interactive sequences may alternatively be implemented on one or more network devices to provide comparable control access to a media playback system.

The playback control region **542** (FIG. **5**A) may include selectable icons (e.g., by way of touch or by using a cursor) that, when selected, cause playback devices in a selected playback zone or zone group to play or pause, fast forward, rewind, skip to next, skip to previous, enter/exit shuffle mode, enter/exit repeat mode, enter/exit cross fade mode, etc. The playback control region **542** may also include selectable icons that, when selected, modify equalization settings and/or playback volume, among other possibilities.

The playback zone region **543** (FIG. **5**B) may include representations of playback zones within the MPS **100**. The playback zones regions **543** may also include a representation of zone groups, such as the Dining Room+Kitchen zone group, as shown.

In some embodiments, the graphical representations of playback zones may be selectable to bring up additional selectable icons to manage or configure the playback zones in the MPS **100**, such as a creation of bonded zones, creation of zone groups, separation of zone groups, and renaming of zone groups, among other possibilities.

For example, as shown, a "group" icon may be provided within each of the graphical representations of playback zones. The "group" icon provided within a graphical representation of a particular zone may be selectable to bring up options to select one or more other zones in the MPS **100** to be grouped with the particular zone. Once grouped, playback devices in the zones that have been grouped with the particular zone will be configured to play audio content in synchrony with the playback device(s) in the particular zone. Analogously, a "group" icon may be provided within a graphical representation of a zone group. In this case, the "group" icon may be selectable to bring up options to deselect one or more zones in the zone group to be removed from the zone group. Other interactions and implementations for grouping and ungrouping zones via a user interface are also possible. The representations of playback zones in the playback zone region **543** (FIG. **5**B) may be dynamically updated as playback zone or zone group configurations are modified.

The playback status region **544** (FIG. **5**A) may include graphical representations of audio content that is presently being played, previously played, or scheduled to play next in the selected playback zone or zone group. The selected playback zone or zone group may be visually distinguished on a controller interface, such as within the playback zone region **543** and/or the playback status region **544**. The graphical representations may include track title, artist name, album name, album year, track length, and/or other relevant information that may be useful for the user to know when controlling the MPS **100** via a controller interface.

The playback queue region **546** may include graphical representations of audio content in a playback queue associated with the selected playback zone or zone group. In some embodiments, each playback zone or zone group may be associated with a playback queue comprising information corresponding to zero or more audio items for playback by the playback zone or zone group. For instance, each audio item in the playback queue may comprise a uniform resource identifier (URI), a uniform resource locator (URL), or some other identifier that may be used by a playback device in the playback zone or zone group to find and/or retrieve the audio item from a local audio content source or a networked audio content source, which may then be played back by the playback device.

In one example, a playlist may be added to a playback queue, in which case information corresponding to each audio item in the playlist may be added to the playback queue. In another example, audio items in a playback queue may be saved as a playlist. In a further example, a playback queue may be empty, or populated but "not in use" when the playback zone or zone group is playing continuously streamed audio content, such as Internet radio that may continue to play until otherwise stopped, rather than discrete audio items that have playback durations. In an alternative embodiment, a playback queue can include Internet radio and/or other streaming audio content items and be "in use" when the playback zone or zone group is playing those items. Other examples are also possible.

When playback zones or zone groups are "grouped" or "ungrouped," playback queues associated with the affected playback zones or zone groups may be cleared or re-

associated. For example, if a first playback zone including a first playback queue is grouped with a second playback zone including a second playback queue, the established zone group may have an associated playback queue that is initially empty, that contains audio items from the first playback queue (such as if the second playback zone was added to the first playback zone), that contains audio items from the second playback queue (such as if the first playback zone was added to the second playback zone), or a combination of audio items from both the first and second playback queues. Subsequently, if the established zone group is ungrouped, the resulting first playback zone may be re-associated with the previous first playback queue or may be associated with a new playback queue that is empty or contains audio items from the playback queue associated with the established zone group before the established zone group was ungrouped. Similarly, the resulting second playback zone may be re-associated with the previous second playback queue or may be associated with a new playback queue that is empty or contains audio items from the playback queue associated with the established zone group before the established zone group was ungrouped. Other examples are also possible.

With reference still to FIGS. **5**A and **5**B, the graphical representations of audio content in the playback queue region **646** (FIG. **5**A) may include track titles, artist names, track lengths, and/or other relevant information associated with the audio content in the playback queue. In one example, graphical representations of audio content may be selectable to bring up additional selectable icons to manage and/or manipulate the playback queue and/or audio content represented in the playback queue. For instance, a represented audio content may be removed from the playback queue, moved to a different position within the playback queue, or selected to be played immediately, or after any currently playing audio content, among other possibilities. A playback queue associated with a playback zone or zone group may be stored in a memory on one or more playback devices in the playback zone or zone group, on a playback device that is not in the playback zone or zone group, and/or some other designated device. Playback of such a playback queue may involve one or more playback devices playing back media items of the queue, perhaps in sequential or random order.

The sources region **548** may include graphical representations of selectable audio content sources and/or selectable voice assistants associated with a corresponding VAS. The VASes may be selectively assigned. In some examples, multiple VASes, such as AMAZON's Alexa, MICROSOFT's Cortana, etc., may be invokable by the same NMD. In some embodiments, a user may assign a VAS exclusively to one or more NMDs. For example, a user may assign a first VAS to one or both of the NMDs **102***a* and **102***b* in the Living Room shown in FIG. **1**A, and a second VAS to the NMD **103***f* in the Kitchen. Other examples are possible.

d. Example Audio Content Sources

The audio sources in the sources region **548** may be audio content sources from which audio content may be retrieved and played by the selected playback zone or zone group. One or more playback devices in a zone or zone group may be configured to retrieve for playback audio content (e.g., according to a corresponding URI or URL for the audio content) from a variety of available audio content sources. In one example, audio content may be retrieved by a playback device directly from a corresponding audio content source (e.g., via a line-in connection). In another example, audio content may be provided to a playback device over a network via one or more other playback devices or network devices. As described in greater detail below, in some embodiments audio content may be provided by one or more media content services.

Example audio content sources may include a memory of one or more playback devices in a media playback system such as the MPS **100** of FIG. **1**, local music libraries on one or more network devices (e.g., a controller device, a network-enabled personal computer, or a networked-attached storage ("NAS")), streaming audio services providing audio content via the Internet (e.g., cloud-based music services), or audio sources connected to the media playback system via a line-in input connection on a playback device or network device, among other possibilities.

In some embodiments, audio content sources may be added or removed from a media playback system such as the MPS **100** of FIG. **1**A. In one example, an indexing of audio items may be performed whenever one or more audio content sources are added, removed, or updated. Indexing of audio items may involve scanning for identifiable audio items in all folders/directories shared over a network accessible by playback devices in the media playback system and generating or updating an audio content database comprising metadata (e.g., title, artist, album, track length, among others) and other associated information, such as a URI or URL for each identifiable audio item found. Other examples for managing and maintaining audio content sources may also be possible.

FIG. **6** is a message flow diagram illustrating data exchanges between devices of the MPS **100**. At step **650***a*, the MPS **100** receives an indication of selected media content (e.g., one or more songs, albums, playlists, podcasts, videos, stations) via the control device **104**. The selected media content can comprise, for example, media items stored locally on or more devices (e.g., the audio source **105** of FIG. **1**C) connected to the media playback system and/or media items stored on one or more media service servers (one or more of the remote computing devices **106** of FIG. **1**B). In response to receiving the indication of the selected media content, the control device **104** transmits a message **651***a* to the playback device **102** (FIGS. **1**A-**1**C) to add the selected media content to a playback queue on the playback device **102**.

At step **650***b*, the playback device **102** receives the message **651***a* and adds the selected media content to the playback queue for play back.

At step **650***c*, the control device **104** receives input corresponding to a command to play back the selected media content. In response to receiving the input corresponding to the command to play back the selected media content, the control device **104** transmits a message **651***b* to the playback device **102** causing the playback device **102** to play back the selected media content. In response to receiving the message **651***b*, the playback device **102** transmits a message **651***c* to the computing device **106** requesting the selected media content. The computing device **106**, in response to receiving the message **651***c*, transmits a message **651***d* comprising data (e.g., audio data, video data, a URL, a URI) corresponding to the requested media content.

At step **650***d*, the playback device **102** receives the message **651***d* with the data corresponding to the requested media content and plays back the associated media content.

At step **650***e*, the playback device **102** optionally causes one or more other devices to play back the selected media content. In one example, the playback device **102** is one of a bonded zone of two or more players (FIG. **1**M). The

playback device **102** can receive the selected media content and transmit all or a portion of the media content to other devices in the bonded zone. In another example, the playback device **102** is a coordinator of a group and is configured to transmit and receive timing information from one or more other devices in the group. The other one or more devices in the group can receive the selected media content from the computing device **106**, and begin playback of the selected media content in response to a message from the playback device **102** such that all of the devices in the group play back the selected media content in synchrony.

III. Example Network Microphone Device

FIG. **7**A is a functional block diagram illustrating certain aspects of an example network microphone device (NMD) **703**. Generally, the NMD **703** may be similar to the network microphone device(s) **103** illustrated in FIGS. **1**A and **1**B. As shown, the NMD **703** includes various components, each of which is discussed in further detail below. The various components of the NMD **703** may be operably coupled to one another via a system bus, communication network, or some other connection mechanism.

Many of these components are similar to the playback device **102** of FIG. **2**A. In some examples, the NMD **703** may be implemented in a playback device **102**. In such cases, the NMD **703** might not include duplicate components (e.g., a network interface **224** and a network **724**), but may instead share several components to carry out both playback and voice control functions. Alternatively, within some examples, the NMD **703** is not designed for audio content playback and therefore may exclude audio processing components **216**, amplifiers **217**, and/or speakers **218** or may include relatively less capable versions of these components (e.g., less powerful amplifier(s) **217** and/or smaller speakers **218**). An example of such a device is the AMAZON ECHO DOT®.

As shown, the NMD **703** includes at least one processor **712**, which may be a clock-driven computing component configured to process input data according to instructions stored in memory **713**. The memory **713** may be a tangible, non-transitory, computer-readable medium configured to store instructions that are executable by the processor **712**. For example, the memory **713** may be data storage that can be loaded with software code **714** that is executable by the processor **712** to achieve certain functions.

The at least one network interface **724** may take the form of one or more wireless interfaces **725** and/or one or more wired interfaces **726**. The wireless interface **725** may provide network interface functions for the NMD **703** to wirelessly communicate with other devices (e.g., playback device(s) **102**, other NMD(s) **103**, and/or controller device(s) **104**) in accordance with a communication protocol (e.g., any wireless standard including IEEE 802.11a, 802.11b, 802.11g, 802.11n, 802.11ac, 802.15, 4G mobile communication standard, and so on). The wired interface **726** may provide network interface functions for the NMD **703** to communicate over a wired connection with other devices in accordance with a communication protocol (e.g., IEEE 802.3). While the network interface **724** shown in FIG. **7**A includes both wired and wireless interfaces, the playback device **102** may in various implementations include only wireless interface(s) or only wired interface(s).

As shown in FIG. **7**A, the NMD **703** also includes voice processing components **720** that are operably coupled to microphones **722**. The microphones **722** are configured to detect sound (i.e., acoustic waves) in the environment of the NMD **703**, which is then provided to the voice processing components **720**. More specifically, the microphones **722** are configured to detect sound and convert the sound into a digital or analog signal representative of the detected sound, which can then cause the voice processing component **720** to perform various functions based on the detected sound, as described in greater detail below. In one implementation, the microphones **722** are arranged as one or more arrays of microphones (e.g., an array of six microphones). In some implementations, the NMD **703** includes more than six microphones (e.g., eight microphones or twelve microphones) or fewer than six microphones (e.g., four microphones, two microphones, or a single microphone).

In operation, similar to the voice-processing components **220** of the NMD-equipped playback device **102** the voice-processing components **720** are generally configured to detect and process sound received via the microphones **722**, identify potential voice input in the detected sound, and extract detected-sound data to enable processing of the voice input by a cloud-based VAS, such as the VAS **190** (FIG. **1**B), or a local NLU. The voice processing components **720** may include one or more analog-to-digital converters, an acoustic echo canceller ("AEC"), a spatial processor, one or more buffers (e.g., one or more circular buffers), one or more wake-word engines, one or more voice extractors, and/or one or more speech processing components (e.g., components configured to recognize a voice of a particular user or a particular set of users associated with a household), among other example voice processing components. In example implementations, the voice processing components **720** may include or otherwise take the form of one or more DSPs or one or more modules of a DSP. In some implementations, one or more of the voice processing components **720** may be a subcomponent of the processor **712**.

As further shown in FIG. **7**A, the NMD **703** also includes power components **727**. The power components **727** include at least an external power source interface **728**, which may be coupled to a power source (not shown) via a power cable or the like that physically connects the NMD **703** to an electrical outlet or some other external power source. Other power components may include, for example, transformers, converters, and like components configured to format electrical power.

In some implementations, the power components **727** of the NMD **703** may additionally include an internal power source **729** (e.g., one or more batteries) configured to power the NMD **703** without a physical connection to an external power source. When equipped with the internal power source **729**, the NMD **703** may operate independent of an external power source. In some such implementations, the external power source interface **728** may be configured to facilitate charging the internal power source **729**. As discussed before, a NMD comprising an internal power source may be referred to herein as a "portable NMD." On the other hand, a NMD that operates using an external power source may be referred to herein as a "stationary NMD," although such a device may in fact be moved around a home or other environment (e.g., to be connected to different power outlets of a home or other building).

The NMD **703** further includes a user interface **740** that may facilitate user interactions independent of or in conjunction with user interactions facilitated by one or more of the controller devices **104**. In various embodiments, the user interface **740** includes one or more physical buttons and/or supports graphical interfaces provided on touch sensitive screen(s) and/or surface(s), among other possibilities, for a user to directly provide input. The user interface **740** may

further include one or more of lights (e.g., LEDs) and the speakers to provide visual and/or audio feedback to a user.

As an illustrative example, FIG. 7B shows an isometric view of the NMD **730**. As shown in FIG. 7B, the NMD **730** includes a housing **730**. The housing **730** may carry one or more components shown in FIG. 7A. The housing **730** includes a user interface **740***a* carried on the top portion **734** of the housing **730**. The user interface **740** includes buttons **736***a*-**736***c* for controlling audio playback, volume level, and other functions. The user interface **740***a* also includes a button **736***d* for toggling the microphones **722** to either an on state or an off state.

As further shown in FIG. 7B, apertures are formed in the top portion **734** of the housing **730** through which the microphones **722** receive sound in the environment of the NMD **703**. The microphones **722** may be arranged in various positions along and/or within the top portion **734** or other areas of the housing **730** so as to detect sound from one or more directions relative to the NMD **703**.

FIG. 7C is a functional block diagram showing aspects of an NMD **703** configured in accordance with embodiments of the disclosure. As described in more detail below, the NMD **703** is configured to handle certain voice inputs locally, without necessarily transmitting data representing the voice input to a VAS. The NMD **703** is also configured to process other voice inputs using a voice assistant service.

Referring to the FIG. 7C, the NMD **703** includes a voice front end **757** (also referred to as voice capture components). The microphones **722** of the NMD **703** are configured to provide detected sound, S_D, from the environment of the NMD **703** to the voice front end **757**. The detected sound S_D may take the form of one or more analog or digital signals. In example implementations, the detected sound S_D may be composed of a plurality signals associated with respective channels that are fed to the voice front end **757**.

Each channel may correspond to a particular microphone **722**. For example, an NMD having six microphones may have six corresponding channels. Each channel of the detected sound S_D may bear certain similarities to the other channels but may differ in certain regards, which may be due to the position of the given channel's corresponding microphone relative to the microphones of other channels. For example, one or more of the channels of the detected sound S_D may have a greater signal to noise ratio ("SNR") of speech to background noise than other channels.

The voice front end **757** may include various components to facilitate conditioning and/or initial processing of the detected sound, S_D, such as an AEC, a spatial processor, and one or more buffers. In operation, the AEC receives the detected sound S_D and filters or otherwise processes the sound to suppress echoes and/or to otherwise improve the quality of the detected sound S_D. That processed sound may then be passed to the spatial processor.

The spatial processor is typically configured to analyze the detected sound S_D and identify certain characteristics, such as a sound's amplitude (e.g., decibel level), frequency spectrum, directionality, etc. In one respect, the spatial processor **764** may help filter or suppress ambient noise in the detected sound S_D from potential user speech based on similarities and differences in the constituent channels of the detected sound S_D, as discussed above. As one possibility, the spatial processor may monitor metrics that distinguish speech from other sounds. Such metrics can include, for example, energy within the speech band relative to background noise and entropy within the speech band—a measure of spectral structure—which is typically lower in speech than in most common background noise. In some implementations, the spatial processor **764** may be configured to determine a speech presence probability, examples of such functionality are disclosed in U.S. patent application Ser. No. 15/984,073, filed May 18, 2018, titled "Linear Filtering for Noise-Suppressed Speech Detection," which is incorporated herein by reference in its entirety.

In operation, the one or more buffers—one or more of which may be part of or separate from the memory **713** (FIG. 7A)—capture data corresponding to the detected sound S_D. More specifically, the one or more buffers capture detected-sound data that was processed by the upstream AEC and spatial processor.

The detected-sound data forms a digital representation (i.e., sound-data stream), S_{DS}, of the sound detected by the microphones **722**. In practice, the sound-data stream S_{DS} may take a variety of forms. As one possibility, the sound-data stream S_{DS} may be composed of frames, each of which may include one or more sound samples. The frames may be streamed (i.e., read out) from the one or more buffers for further processing by downstream components, such as the wake-word engines **758** and the voice extractor **759** of the NMD **703**.

In some implementations, at least one buffer captures detected-sound data utilizing a sliding window approach in which a given amount (i.e., a given window) of the most recently captured detected-sound data is retained in the at least one buffer while older detected-sound data is overwritten when it falls outside of the window. For example, at least one buffer may temporarily retain 20 frames of a sound specimen at given time, discard the oldest frame after an expiration time, and then capture a new frame, which is added to the **19** prior frames of the sound specimen.

In practice, when the sound-data stream S_{DS} is composed of frames, the frames may take a variety of forms having a variety of characteristics. As one possibility, the frames may take the form of audio frames that have a certain resolution (e.g., 16 bits of resolution), which may be based on a sampling rate (e.g., 44,100 Hz). Additionally, or alternatively, the frames may include information corresponding to a given sound specimen that the frames define, such as metadata that indicates frequency response, power input level, SNR, microphone channel identification, and/or other information of the given sound specimen, among other examples. Thus, in some embodiments, a frame may include a portion of sound (e.g., one or more samples of a given sound specimen) and metadata regarding the portion of sound. In other embodiments, a frame may only include a portion of sound (e.g., one or more samples of a given sound specimen) or metadata regarding a portion of sound.

In any case, downstream components of the NMD **703** may process the sound-data stream S_{DS}. These downstream components include one or more wake-word engine(s) **758**, a local voice input pipeline **760**, and a mini-SLU pipeline **770**, among other possible components. These downstream components may be referred to collectively as the voice back-end.

The wake-word engine(s) **758** may include one or more VAS wake-word engines **758***a*, which are configured to apply one or more identification algorithms to the sound-data stream S_{DS} (e.g., streamed sound frames) to spot potential wake words in the detected-sound S_D. Example wake word detection algorithms accept audio as input and provide an indication of whether a wake word is present in the audio. Many first- and third-party wake word detection algorithms are known and commercially available. For instance, operators of a voice service may make their

algorithm available for use in third-party devices. Alternatively, an algorithm may be trained to detect certain wake-words.

For instance, when the VAS wake-word engine(s) **758***a* detects a potential VAS wake word, the VAS wake-word engines **758***a* provides an indication of a "VAS wake-word event" (also referred to as a "VAS wake-word trigger"). In the illustrated example of FIG. **7**A, the VAS wake-word engine(s) **758***a* outputs a signal S_{VW} that indicates the occurrence of a VAS wake-word event to the voice extractor **759**.

In some multi-VAS implementations, the NMD **703** may include a VAS selector (not shown) that is generally configured to direct extraction by the voice extractor **759** and transmission of the sound-data stream S_{DS} to the appropriate VAS when a given wake-word is identified by a particular wake-word engine (and a corresponding wake-word trigger) of the wake-word engines **758**. In such implementations, the NMD **703** may include multiple, different VAS wake-word engines and/or voice extractors, each supported by a respective VAS.

Similar to the discussion above, each VAS wake-word engine **758***a* may be configured to receive as input the sound-data stream S_{DS} from the one or more buffers and apply identification algorithms to cause a wake-word trigger for the appropriate VAS. Thus, as one example, the VAS wake-word engine **758***a* may be configured to identify the wake word "Alexa" and cause the NMD **703***a* to invoke the AMAZON VAS when "Alexa" is spotted. As another example, another VAS wake-word engine may be configured to identify the wake word "Ok, Google" and cause the NMD **520** to invoke the GOOGLE VAS when "Ok, Google" is spotted. In single-VAS implementations, the VAS selector may be omitted.

In response to the VAS wake-word event (e.g., in response to the signal S_{VW} indicating the wake-word event), the voice extractor **759** is configured to receive and format (e.g., packetize) the sound-data stream S_{DS}. For instance, the voice extractor **759** packetizes the frames of the sound-data stream S_{DS} into messages. The voice extractor **759** transmits or streams these messages, M_V, that may contain voice input in real time or near real time to a remote VAS via the network interface **724**.

In some implementations, a user may selectively enable or disable voice input processing via cloud-based voice assistant services. In some examples, to disable the voice input processing via cloud-based voice assistant services, the NMD **703** physically or logically disables the VAS wake-word engine(s) **758***a*. For instance, the NMD **703** may physically or logically prevent the sound-data stream S_{DS} from the microphones **722** from reaching the VAS wake-word engine(s) **758***a* and/or voice extractor **759**. Suppressing generation may involve gating, blocking or otherwise preventing output from the VAS wake-word engine(s) **758***a* from generating a VAS wake-word event.

As described in connection with FIG. **2**C, the voice input **755** may include a keyword portion and an utterance portion. The keyword portion may correspond to detected sound that causes a VAS wake-word event (i.e., a VAS wake word). Alternatively, the keyword portion may correspond to a local keyword, which may generate a local keyword event.

For instance, when the voice input **755** includes a VAS wake word, the keyword portion corresponds to detected sound that causes the VAS wake-word engine **758***a* to output the wake-word event signal S_{VW} to the voice extractor **759**. The utterance portion in this case corresponds to detected sound that potentially comprises a user request following the keyword portion.

When a VAS wake-word event occurs, the VAS may first process the keyword portion within the sound-data stream S_{DS} to verify the presence of a VAS wake word. In some instances, the VAS may determine that the keyword portion comprises a false wake word (e.g., the word "Election" when the word "Alexa" is the target VAS wake word). In such an occurrence, the VAS may send a response to the NMD **703** with an instruction for the NMD **703** to cease extraction of sound data, which causes the voice extractor **759** to cease further streaming of the detected-sound data to the VAS. The VAS wake-word engine **758***a* may resume or continue monitoring sound specimens until it spots another potential VAS wake word, leading to another VAS wake-word event. In some implementations, the VAS does not process or receive the keyword portion but instead processes only the utterance portion.

In any case, the VAS processes the utterance portion to identify the presence of any words in the detected-sound data and to determine an underlying intent from these words. The words may correspond to one or more commands, as well as certain keywords. The keyword may be, for example, a word in the voice input identifying a particular device or group in the MPS **100**. For instance, in the illustrated example, the keyword may be one or more words identifying one or more zones in which the music is to be played, such as the Living Room and the Dining Room (FIG. **1**A).

To determine the intent of the words, the VAS is typically in communication with one or more databases associated with the VAS (not shown) and/or one or more databases (not shown) of the MPS **100**. Such databases may store various user data, analytics, catalogs, and other information for natural language processing and/or other processing. In some implementations, such databases may be updated for adaptive learning and feedback for a neural network based on voice-input processing. In some cases, the utterance portion may include additional information such as detected pauses (e.g., periods of non-speech) between words spoken by a user, as shown in FIG. **2**C. The pauses may demarcate the locations of separate commands, keywords, or other information spoken by the user within the utterance portion.

After processing the voice input, the VAS may send a response to the MPS **100** with an instruction to perform one or more actions based on an intent it determined from the voice input. For example, based on the voice input, the VAS may direct the MPS **100** to initiate playback on one or more of the playback devices **102**, control one or more of these playback devices **102** (e.g., raise/lower volume, group/ungroup devices, etc.), or turn on/off certain smart devices, among other actions. After receiving the response from the VAS, the wake-word engine **771***a* of the NMD **703** may resume or continue to monitor the sound-data stream S_{DS} until it spots another potential wake-word, as discussed above.

In general, the one or more identification algorithms that a particular VAS wake-word engine, such as the VAS wake-word engine **758***a*, applies are configured to analyze certain characteristics of the detected sound stream S_{DS} and compare those characteristics to corresponding characteristics of the particular VAS wake-word engine's one or more particular VAS wake words. For example, the wake-word engine **758***a* may apply one or more identification algorithms to spot spectral characteristics in the detected sound stream S_{DS} that match the spectral characteristics of the

engine's one or more wake words, and thereby determine that the detected sound S_D comprises a voice input including a particular VAS wake word.

In some implementations, the one or more identification algorithms may be third-party identification algorithms (i.e., developed by a company other than the company that provides the NMD **703***a*). For instance, operators of a voice service (e.g., AMAZON) may make their respective algorithms (e.g., identification algorithms corresponding to AMAZON's ALEXA) available for use in third-party devices (e.g., the NMDs **103**), which are then trained to identify one or more wake words for the particular voice assistant service. Additionally, or alternatively, the one or more identification algorithms may be first-party identification algorithms that are developed and trained to identify certain wake words that are not necessarily particular to a given voice service. Other possibilities also exist.

As noted above, the NMD **703***a* also includes a local keyword engine **758***b* in parallel with the VAS wake-word engine **758***a*. Like the VAS wake-word engine **758***a*, the local keyword engine **758***b* may apply one or more identification algorithms corresponding to one or more keywords. A "local keyword event" is generated when a local keyword is identified in the detected-sound S_D. As shown in FIG. **7**C, the VAS wake-word engine **758***a* and local keyword engine **758***b* apply different identification algorithms corresponding to their respective wake words, and further generate different events based on detecting a wake word in the detected-sound S_D. In some implementations, the VAS wake-word engine **758***a* and the local keyword engine **758***b* are implemented in the same logical unit configured to detect multiple keywords (e.g., VAS wake words and local keywords) and generate respective events corresponding to the different keywords.

Local keywords may take the form of command keywords. In contrast to the nonce words typically as utilized as VAS wake words, command keywords function as both the activation word and the command itself. For instance, example command keywords may correspond to playback commands (e.g., "play," "pause," "skip," etc.) as well as control commands ("turn on"), among other examples. Under appropriate conditions, based on detecting one of these command keywords, the NMD **703***a* performs the corresponding command. Examples of command keyword eventing are described in U.S. patent application Ser. No. 16/439,009, filed Jun. 12, 2019, titled "Network Microphone Device with Command Keyword Conditioning," which is incorporated by reference in its entirety. As noted above, utilizing command keywords instead of nonce keywords may allow a user to interact with the NMD **703** more naturally, without having to preface their voice input with the nonce keyword.

On the other hand, some implementations may utilize a one or more local keywords that take the form of a nonce wake word corresponding to local processing (e.g., "Hey Sonos"), which is different from the VAS wake words corresponding to respective voice assistant services. Exemplary local wake-word detection is described in "Efficient keyword spotting using dilated convolutions and gating," by Alice Coucke et al., published on Nov. 19, 2018, available at https://arxiv.org/pdf/1811.07684.pdf, which is incorporated by reference herein in its entirety and reproduced below in Appendix A. In such examples, the NMD **703** may utilize such keywords to trigger local keyword events, perhaps as an alternative to or in addition to command keywords.

As noted above, the local voice input pipeline **760** may also process the sound-data stream S_{DS}. The local voice input pipeline **760** includes an automatic speech recognizer (ASR) **761**, which is configured to process the sound-data stream S_{DS} and output phonetic or phenomic representations, such as text corresponding to words. For instance, the ASR **761** may transcribe spoken words represented in the sound-data stream S_{DS} to one or more strings representing the voice input **755**.

The ASR **761** can feed ASR output (labeled as S_{ASR}) to a local natural language unit (NLU) **762** that identifies particular keywords as being local keywords for invoking local-keyword events, as described below.

Exemplary automatic speech recognition is described in "Snips Voice Platform: an embedded Spoken Language Understanding system for private-by-design voice interfaces," by Alice Coucke et al., published on May 25, 2018, and available at https://arxiv.org/pdf/1805.10190.pdf, which is incorporated by reference herein in its entirety.

When the local keyword engine **758***b* detects a keyword in the sound-data stream S_{DS}, the local keyword engine **758***b* generates a local keyword event. This local keyword event triggers the local voice input pipeline **760** to process the portion of the sound-data stream S_{DS} as a voice input. That is, the local NLU **762** may perform keyword spotting on the portions of the ASR output corresponding to the detected keyword, including portions of S_{ASR} before and after the detected keyword.

The local voice input pipeline **760** may generate confidence scores representing how closely the voice input matches the determined intent. As noted above, the local voice input pipeline **760** may perform keyword spotting on the output of the ASR **761**. In some cases, the local voice input pipeline **760** may generate confidence scores indicating likelihood of spotting the keywords. The local voice input pipeline **760** may generate a confidence score for the voice input as a whole based on the individual confidence scores for the spotted keywords.

The local NLU **762** includes a keyword library (i.e., words and phrases) corresponding to respective commands and/or parameters. The local NLU **762** may derive an underlying intent from the detected keywords in the voice input **755**. For instance, if the local NLU **762** matches the keywords "David Bowie" and "kitchen" in combination with a play command, the local NLU **762** may determine that the intent of the voice input is to play David Bowie in the Kitchen **101***h* on the playback device **102***i*. In contrast to a processing of the voice input **755** by a cloud-based VAS, local processing of the voice input **755** by the local NLU **762** may be relatively less sophisticated, as the NLU **762** does not have access to the relatively greater processing capabilities and larger voice databases that a VAS generally has access to.

In some examples, the local NLU **762** may determine an intent with one or more slots, which correspond to respective keywords. For instance, referring back to the play David Bowie in the Kitchen example, when processing the voice input, the local NLU **762** may determine that an intent is to play music (e.g., intent=playMusic), while a first slot includes David Bowie as target content (e.g., slot1=DavidBowie) and a second slot includes the Kitchen **101***h* as the target playback device (e.g., slot2=kitchen). Here, the intent (to "playMusic") is based on the command keyword and the slots are parameters modifying the intent to a particular target content and playback device.

Certain parameter keywords may have a corresponding classification. For instance, some keywords may be designed as target keywords, which may refer to devices or groups of devices, perhaps by a zone or Room name. Other keywords

may be classified as content keywords, which may refer to different media items by name or type. These classifications may assist the NMD **703** in slotting keywords to parameter slots.

For instance, an example voice input **755** may be "play music at low volume" with "play" being the command keyword portion (corresponding to a playback command) and "music" "low volume" being parameter keywords. When deriving an intent of this voice input **755**, the local NLU **762** may slot these parameters as modifiers to the command keyword play to derive an intent. Further, various keywords may have classifications to assist in slotting the parameters.

In a second example, another example voice input **755** may be "play my favorites in the Kitchen" with "play" again being the command keyword portion (corresponding to a playback command) and "my favorites" and "Kitchen" as detected parameter keywords. When analyzing this voice input **755**, after detecting the command keyword "play," the local NLU **762** attempts to slot the other detected keywords as parameters to that command. "Kitchen" may slot in as a first parameter representing a target for the playback command (i.e., the kitchen **101***h* zone. Further "favorites" corresponds to a second parameter corresponding to particular audio content (i.e., a particular playlist that includes a user's favorite audio tracks).

In a third example, a further example voice input **755** may be "volume up" with "volume" being the command keyword portion (corresponding to a volume adjustment command) and "up" being a parameter keyword. When analyzing this voice input **755**, after detecting the command keyword "volume," the local NLU **762** attempts to slot the other detected keyword as a parameter to that command. "Up" may slot in as a first parameter representing a certain volume increase (e.g., a 10 point increase on a 100 point volume scale).

Other example voice inputs may relate to smart device commands. For instance, an example voice input **755** may be "turn on patio lights" with "turn on" being the command keyword portion (corresponding to a power on command) and "patio" and "lights" being the parameter keywords. When analyzing this voice input **755**, after detecting the command keyword "turn on," the local NLU **762** attempts to slot the other detected keywords as parameters to that command. In particular, if "patio" is classified as a target parameter, the mini-SLU pipeline **770** may slot that as the target for the command. As another example, another example voice input **755** may be "set temperature to 75" with "set temperature" being the command keyword portion (corresponding to a thermostat adjustment command) and "to 75" being the voice utterance portion. When analyzing this voice input **755**, the NLU **776** may recognize that "to 75" is a keyword in its library **778** corresponding to a parameter representing a setting for the thermostat adjustment command. Accordingly, the NLU **776** may determine an intent to set a smart thermostat to 75 degrees.

Some commands may require one or more parameters, as such the command keyword alone does not provide enough information to perform the corresponding command. For example, the command keyword "volume" might require a parameter to specify a volume increase or decrease, as the intent of "volume" of volume alone is unclear. As another example, the command keyword "group" may require two or more parameters identifying the target devices to group.

Accordingly, in some example implementations, when a given local wake-word is detected in the voice input **755** by the local voice input pipeline, **760** the local NLU **762** may determine whether the voice input **755** includes keywords corresponding to the required parameters. If the voice input **755** does include keywords matching the required parameters, the NMD **703** proceeds to perform the command (corresponding to the given command keyword) according to the parameters specified by the keywords.

However, if the voice input **755** does not include keywords matching the required parameters for the command, the NMD **703** may prompt the user to provide the parameters. For instance, in a first example, the NMD **703** may play an audible prompt such as "I've heard a command, but I need more information" or "Can I help you with something?" Alternatively, the NMD **703** may send a prompt to a user's personal device via a control application (e.g., the software components **132***c* of the control device(s) **104**).

Within additional examples, when a voice utterance portion does not include keywords corresponding to one or more required parameters, the NMD **703** may perform the corresponding command according to one or more default parameters. For instance, if a playback command does not include keywords indicating target playback devices **102** for playback, the NMD **703** may default to playback on the NMD **703** itself (e.g., if the NMD **703***a* is implemented within a playback device **102**) or to target one or more associated playback devices **102** (e.g., playback devices **102** in the same room or zone as the NMD **703***a*). Further, in some examples, the user may configure default parameters using a graphical user interface (e.g., user interface **430**) or voice user interface. For example, if a grouping command does not specify the playback devices **102** to group, the NMD **703** may default to instructing two or more pre-configured default playback devices **102** to form a synchrony group. Default parameters may be stored in data storage (e.g., the memory **112***b* (FIG. **1**F)) and accessed when the NMD **703***a* determines that keywords exclude certain parameters. Other examples are possible as well.

As noted above, a mini-SLU pipeline **770** may monitor the sound-data stream S_{DS}. The mini-SLU pipeline **770** includes a hybrid keyword detector **771**, which is configured to spot keywords. In contrast to keyword spotting via the local NLU **762**, the hybrid keyword detector **771** spots keywords in the sound-data stream S_{DS} rather than in the ASR output S_{ASR}. While the local voice input pipeline **760** is shown as a parallel pipeline by way of example, in some examples, the NMD **703** might not include the local voice input pipeline **760**.

The hybrid keyword detector **771** may be configured to detect pre-loaded keywords. Pre-loaded keywords may include both command keywords as well as commonly-used parameters corresponding to the commands. The set of keywords implemented in a given NMD may be task-based. For instance, if the NMD **703** is implemented in the media playback system **100** (FIG. **1**A), the NMD **703** may be trained to detect keywords corresponding to playback commands such as "play," "pause," or "skip." In some cases, the pre-loaded keywords correspond to other tasks, such as control of various IoT devices like the one or more smart illumination devices **108** or smart thermostat **110** (FIG. **1**B). Further, in some cases, the hybrid keyword detector **771** may be configured to detect pre-loaded keywords corresponding to two or more tasks, such as control of different types of smart devices in the same household.

In some examples, the hybrid keyword detector **771** is configured to detect custom keywords. In various examples, a user may define custom keywords via a user interface, such as the user interface **440** (FIG. **4**) on a control device **104** or the user interface **740** on the NMD **703** (FIG. **7**A). Custom

keywords may correspond to custom commands, such as a custom command ("party time") to enable a custom scene (e.g., grouping playback devices into a synchrony group to play back a particular party playlist in synchrony).

When the hybrid keyword detector **771** detects a keyword in the sound-data stream S_{DS}, the hybrid keyword detector **771** generates a keyword detection event. This keyword detection event triggers the mini-SLU pipeline **770** to process the portion of the sound-data stream S_{DS} as a voice input. With the mini-SLU pipeline **770**, presence of a keyword in the voice input indicates intent to perform the command associated with the keyword. In other words, intent to perform a command is directly based on presence of the keyword corresponding to that command. Within examples, the NMD **703** may maintain or have access to data correlating the keywords to corresponding commands. In this manner, intent determination is relatively quicker and less resource intensive as compared with other voice input processing pipelines.

In some cases, a given command may be associated with two or more keywords. In such examples, the mini-SLU pipeline **770** may determine intent to perform the command by detecting whether the two or more keywords are present in the voice input. Presence of one keyword associated with a given command in a voice input may prompt the mini-SLU pipeline **770** to determine whether the other keyword is present in the voice input. For instance, if the hybrid keyword detector **771** spots the keyword "volume" in a voice input, the mini-SLU pipeline **770** may determine whether the keywords "up" or "down" are also present in the voice input. In this manner, the mini-SLU pipeline **770** may determine intent based on presence without performing full spoken language understanding.

As indicated above, in some cases, the hybrid keyword detector **771** is configured to spot parameter keywords. For instance, if the NMD **703** is implemented in the media playback system **100** (FIG. **1**A), the NMD **703** may be trained to detect playback-related parameters. Pre-loaded parameter keywords may include commonly used names of playback targets (e.g., names of Rooms or zones commonly found in a household, such as "Living Room," "Kitchen" or "Master Bedroom") as illustrated by the zones of the media playback system **100** (FIG. **1**A). Within examples, a user may add custom keywords such as playlist names or the names of favorite artists, albums, or other metadata, as well as the names of custom playback targets (e.g., custom zones names).

To maintain the small footprint of the mini-SLU pipeline **770**, it is generally impractical to train the hybrid keyword detector **771** to detect many items of metadata, such as the metadata of the millions of audio tracks provided by a streaming media service. Generally, voice inputs referencing metadata outside of a subset of user favorites are handled by a more capable processing pipeline, such as the local voice input pipeline or cloud-based voice assistant processing. In this design, the user is able to customize the mini-SLU pipeline **770** to handle certain commands and parameters quickly, while maintaining the more capable (albeit slower) parallel processing pipeline(s) for queries outside of the scope of the mini-SLU pipeline **770**.

In operation, the hybrid keyword detector **771** may generate confidence scores predicting whether a portion of the sound-data stream S_{DS} (e.g., a time segment) includes each keyword. In example implementations, when the probability of detecting a keyword exceeds a threshold, the segment is determined to include that keyword. In an example implementation, when a keyword is detected, the hybrid keyword detector **771** generates a keyword detection event to process the portion of the sound-data stream S_{DS} including the keyword as a voice input. The hybrid keyword detector **771** may lower the threshold for recognizing other portions of the of the sound-data stream S_{DS} in proximity to the detected keyword as including keywords on the basis that these portions are more likely to be part of the voice input (and not false positives).

The hybrid keyword detector **771** may implement a neural architecture to spot keywords. FIG. **7**D illustrates an example neural architecture **775**, which may be implemented in the hybrid keyword detector **771**. In operation, the neural architecture **775** takes input from the sound-data stream S_{DS} and generates confidence scores $C_1, C_2, \ldots C_N$ predicting whether a portion of the sound-data stream S_{DS} (e.g., a time segment) includes each keyword.

Aspects of example hybrid keyword detectors and mini-SLU pipelines can be found below in Appendix A, under the section title "Predicting detection filters for small footprint open-vocabulary keyword spotting.

As shown in FIG. **7**D, the neural architecture **775** includes intermediate layers **776**, which together form an acoustic encoder. In illustrative examples, the intermediate layers **776** are composed of a stack of long short-term memory (LTSM) layers pre-trained to generate quantized intermediate features from the sound-data stream S_{DS}. The intermediate layers can be represented mathematically as $F(x; \theta_F)$, where parameters θ_F are applied to input x.

The output layer **777** is a convolutional layer that predicts the probability of detecting each keyword at each timestep. The output layer **777** includes an output (referred to as a confidence score) $(C_1, C_2, \ldots C_N)$ corresponding to each keyword. Each confidence score reflects how closely the sound patterns in the voice input **755** match the sound patterns for the corresponding word. In examples, these confidences scores may be sigmoid outputs with values from 0-1 with 1 indicating a high probability of the sound-data stream S_{DS} including the keyword and 0 indicating a low probability. In such examples, for keyword k, the output sequence y_k is computed as follows:

$$y_k = y_{k,1} \ldots y_{k,T} = \sigma(\theta_k * F(x;\theta_F))$$

where σ is the sigmoid function, * is the convolution operation, and $F(x; \theta_F)$ represents the intermediate layers **776** applied to input x, and θ_k is the convolutional kernel corresponding to keyword k.

The keyword encoder **778** is an auxiliary neural network configured to predict the parameters θ_k used to detect the keyword. The keyword encoder **778** can be represented as:

$$\theta_k = E(\pi_k;\theta_E)$$

where θ_E represents the parameters of the neural network of the keyword encoder **779** and π_k is the phone sequence of the keyword k. The keyword encoder **779** allows custom (i.e., user-defined) keywords to be adopted by the neural architecture **775**. That is, when provided a custom keyword k_{cust} (e.g., "party time"), the keyword encoder **779** predicts the parameters θ_k used to detect the custom keyword. These parameters are then convoluted with the input x to generate a confidence score C_{cust} whether the input x includes the custom keyword.

At inference, the neural architecture **775** may be pre-trained to detect a set of pre-loaded keywords $K=k_1, \ldots, k_n$. These keywords may include command keywords for a specific task or tasks, such as playback (e.g., play, pause, skip, etc.) as well as common parameters for the tasks (e.g., playback zones such as "Living Room" or "Kitchen"). For

each keyword $k \in K$, the phone sequence π_k is retrieved from a pronunciation lexicon or generated using a phone sequence converter **779** and the convolution kernel θ_k is computed using the keyword encoder **779**. Then, the output layer **777** can be created with the set of computed kernels $\{\theta_k; k \in K\}$ to make the neural architecture ready to process the input data.

Within examples, the intermediate layers **776** and the keyword encoder **778** may be jointly trained using generic speech training set $D=\{(x^{(i)},\pi^{(i)})\}$ without knowing all of the final keywords used in operation. Combining the intermediate layers **776**, the output layer **777**, and the keyword encoder **778** yields:

$$y_k=\sigma(E(\pi_k)*F(x)).$$

For each time step t of each training sample x, the training set includes a set $K_{i,t}^{+}$ of positive examples for π_k (where $y_{k,t}$ is close to 1) and a set $K_{i,t}^{-}$ of negative examples for π_k (where $y_{k,t}$ is close to 0). Then, in training, the following loss is minimized:

$$L_{KWS} = \sum_{x^{(i)},\pi^{(i)} \in D} \sum_{t} l(i, t)$$

where

$$l(i,t)=-\Sigma_{k \in K_{i,t}^{-}} \log(1-y_{k,t}^{(i)})-\Sigma_{k \in K_{i,t}^{+}} \log(y_{k,t}^{(i)}).$$

In some examples, the output layer **777** may be further trained based on keyword-specific data, which increase the probability of detecting certain keywords (e.g., pre-loaded keywords) relative to other keywords (e.g., custom keywords). More particularly, the weights generated by the keyword encoder **778** when training on generic speech data may be used as a started point for re-training on keyword-specific data (i.e., users speaking the keywords to be detected). In such cases, the weights of the output layer **777** can be represented as:

$$\theta_k=E(\pi_k;\theta_E)+\theta_k^{(data)}.$$

Given a training set D_K for a set of keywords K composed of positive as well as negative data, the data specific parameters $\{\theta_{k_k}^{(data)}\}k \in K$ can be adjusted to optimize the loss as noted above.

Referring together to FIGS. **7**C and **7**D, in some cases, the NMD **703** may determine a confidence score for the voice input as a whole, which may be based on confidence scores for the constituent keywords in the voice input. For instance, the NMD **703** may average or otherwise combine the individual keyword confidence scores to determine the confidence score for the voice input. Then, the NMD **703** may perform a command according to a determined intent when the confidence score for a given voice input exceeds a given threshold value (e.g., 0.5 on a scale of 0-1, indicating that the given sound is more likely than not the command keyword). Conversely, when the confidence score for a given intent is at or below the given threshold value, the NMD **703** does not perform the operation according to the determined intent.

As noted above, for certain keywords, such as pre-loaded keywords, the neural architecture **775** may have been trained with relatively more training data than other keywords, such as custom (e.g., user-defined) keywords. Custom keywords might not have any particular training data at all; instead, as discussed above, the weights used to detect custom keywords may be predicted by the keyword encoder **778**, which itself was trained on generic speech data (and possibly additionally trained on keyword-specific data for the pre-loaded keywords). The hybrid keyword detector **771** may accordingly be able to detect any pre-loaded keywords in the voice input **755** with relatively more confidence than custom keywords.

In some cases, the voice input **755** includes both pre-loaded and custom keywords. For instance, when analyzing a given voice input (e.g., "play the party time playlist"), the NMD may inherently have relatively higher confidence in detecting pre-loaded keywords in this voice input (e.g., "play") compared with detecting the custom keywords in the voice input (e.g., "party time playlist") that were defined by the user. This increased confidence may come from increased training data for the pre-loaded keywords, as well as other adjustments made to the neural architecture to improve the ability of the hybrid keyword detector to spot the pre-loaded keywords. Since the custom keywords are defined by the user, it is not possible to train the neural architecture **775** with such keyword specific data.

In practice, many voice inputs include more than one keyword. Moreover, certain keywords are typically used in a voice input with other keywords. For instance, the command keyword "play" is often used with parameter keywords identifying what to play (which playlist, artist, song, station, etc.) and possibly where to play it (i.e., which zone), among other possible parameters. As another example, the command keyword "turn on" is often used with a parameter keyword identifying what to turn on.

Based on such practices, the mini-SLU pipeline **770** may be configured to derive a greater confidence level in spotting custom keywords when detecting such keywords in a voice input with pre-loaded keywords. That is, when the hybrid keyword detector **771** spots a pre-loaded keyword in a voice input with high confidence and also spots a custom keyword is in the voice input albeit with relatively lower confidence, the NMD **703** may increase the native confidence score for the custom keyword to indicate an increased confidence in spotting the keyword in the voice input. Such an adjustment to a custom keyword would increase the confidence for the voice input as a whole. Alternatively, the hybrid keyword detector **771** may assign a higher confidence to the voice input as a whole than would otherwise be assigned to a voice input with the constituent keywords. This functionality is based on this assumption that when the hybrid keyword detector **771** has spotted one or more keywords with high confidence, other sounds spoken with those high-confidence keywords are more likely to be keywords as well.

Similar processing techniques may be applied to other parallel processing pipelines. For instance, the local voice input pipeline **760** may be configured to derive a greater confidence level in spotting custom keywords when detecting such keywords in a voice input with pre-loaded keywords. That is, similar to the mini-SLU pipeline **770**, when the local voice input pipeline **760** spots a pre-loaded keyword in a voice input with high confidence and also spots a custom keyword is in the voice input albeit with relatively lower confidence, the NMD **703** may increase the native confidence score for the custom keyword to indicate an increased confidence in spotting the keyword in the voice input. Such an adjustment to a consistent keyword would increase the confidence for the voice input as a whole. Alternatively, the NMD **703** may assign a higher confidence to the voice input as a whole than would otherwise be assigned to a voice input with the constituent keywords. Such processing techniques may also be applied to cloud-based processing by a voice assistant service that supports custom keywords.

Within examples, certain keywords are functionally linked to other keywords, which may allow the NMD **703** adjust the confidence score for a voice input based on the combination of keywords detected. For instance, the command keyword "skip" may be functionality linked to the keywords "forward" and "backward" and their cognates. Accordingly, when the command keyword "skip" is detected in a given voice input **755**, the confidence for the voice input may be adjusted upwards when "backward" or "forward" is also detected. Conversely, the confidence for the voice input may be adjusted downwards when "backward" or "forward" is not detected.

Further, in some cases, the NMD **703** may functionally link one or more pre-loaded keywords with one or more custom keywords. For instance, when a user defines a custom keyword to refer to a particular playlist, the NMD **703** may functionally link that keyword with the command keyword "play", as the user is likely to use the "play" command keyword in combination with the custom playlist parameter keyword. Then, if one of the functionality-linked keywords is detected in a voice input, the hybrid keyword detector **771** may adjust the confidence score if the other keyword is also detected in the voice input, albeit at a lower confidence.

In some implementations, a phrase may be used as a keyword, which provides additional patterns to match (or not match). For instance, a user may define a custom keyword of "Ron's Relaxation Lounge" to refer to playback devices in his den and the custom keyword "jams" to refer to a particular playlist. This user may then speak the voice input "Play jams in Ron's Relaxation Lounge." Since the custom keyword has multiple patterns, the hybrid keyword detector **771** may typically detect it with a relatively high confidence as compared with "jams." Accordingly, when detecting both "Ron's Relaxation Lounge" and "jams" the hybrid keyword detector **771** may increase the confidence score of "jams" (or the voice input as a whole).

As illustrated in FIG. **7**C, the mini-SLU pipeline **770** may operate in parallel on the NMD **703** with cloud-based VAS processing and/or local processing via the local voice input pipeline **760** (referred to as parallel processing paths). Such parallel operation may result in parallel processing of a given voice input. For instance, the voice input "Siri, play me some Mitski" may trigger a VAS wake word event (based on the VAS wake word "Siri") and also a keyword detection event (based on the keyword "play"). Duplicate processing of the voice input is undesirable as it may cause conflicting operations.

In some cases, the mini-SLU pipeline **770** is configured to stop processing of the voice input by the parallel processing paths when the mini-SLU pipeline **770** processes the voice input. The mini-SLU pipeline **770** is typically able to process voice inputs more quickly than the parallel processing paths, as the mini-SLU pipeline **770** does not perform ASR and does not have latency inherent in cloud-based processing. Due to the relatively quick response of the mini-SLU pipeline **770** relative to the parallel processing paths, the mini-SLU pipeline **770** may generally be first to process voice inputs in the sound-data stream S_{DS}. If the mini-SLU pipeline **770** completes processing (i.e., performs a command according to the determined intent), the mini-SLU pipeline **770** may stop processing by the parallel processing paths to avoid duplicate processing.

Alternatively, when detecting one or more keywords in the sound-data stream S_{DS}, the mini-SLU pipeline **770** may pause processing by the parallel processing paths. Then, if the mini-SLU pipeline **770** does not complete processing of the voice input (e.g., because the keywords were matched with low confidence), the mini-SLU pipeline **770** can resume processing by the parallel processing paths. This functionality allows the mini-SLU pipeline **770** to have a first opportunity to process the voice input for the benefit of quicker processing, but also maintain the parallel processing paths as backup to the mini-SLU pipeline **770**.

In some implementations, the mini-SLU pipeline **770** sends the voice input **755** to a VAS when the mini-SLU pipeline **770** is unable to process the voice input **755** (e.g., when the mini-SLU pipeline **770** has a low confidence score keywords in the voice input **755**). In an example, to trigger sending the voice input **755**, the NMD **703** may generate a bridging event, which causes the voice extractor **759** to process the sound-data stream S_{DS}, as discussed above. That is, the NMD **703** generates a bridging event to trigger the voice extractor **759** without a VAS wake-word being detected by the VAS wake-word engine **758***a* (instead based on a keyword in the voice input **755**, as well as the mini-SLU pipeline **770** being unable to process the voice input **755**).

Since the hybrid keyword detector is monitoring for more keywords, including words that may be commonly used in conversation, the hybrid keyword detector **771** may be relatively more prone to false positive detections as compared with the wake-word engines **758** (which may be monitoring for a VAS wake-word). Further, the hybrid keyword detector **771** may monitor for keywords more commonly used in conversation as compared with nonce wake word used to trigger VAS wake-word events. False positive detections are undesirable as they may cause unintended commands to be performed, which may alter or interrupt operation of the controlled device(s).

The mini-SLU pipeline **770** may also include a speaker ID engine **773**. The speaker ID engine **773** is configured to determine whether a voice input matches a pre-determined speaker profile. The NMD **703** may maintain (e.g., in the memory **713**) or have access to (e.g., in the cloud) pre-determined speaker profiles corresponding to the users in a household (e.g., the media playback system **100** of FIG. **1**A) as well as other users that have stored a profile with the system. When a voice input matches one of these pre-determined speaker profiles, confidence that the utterance was intended as a voice input to the NMD is increased.

In example implementations, the mini-SLU pipeline **770** does not perform any command according to the determined intent in a voice input unless the voice input matches a pre-determined speaker profile. That is, determining that the voice input matches a pre-determined speaker profile is a condition on whether the NMD **703** performs a command when the hybrid keyword detector **771** keywords corresponding to a voice input. This condition may reduce the prevalence of false positives by the mini-SLU pipeline **770**, as the NMD **703** will respond only to known users.

When a voice input includes a custom keyword set up by a particular user, the speaker profile condition may further increase confidence by not performing a command corresponding to the determined intent of the voice input unless the voice input matches a pre-determined speaker profile of the particular user. For example, a particular user may set up a custom keyword such as "Party Time" to trigger a particular command or action (such as playback of a particular playlist across multiple (or all) playback devices in a household, as may be useful during a party). When the user utters the keyword "Party Time," the detecting NMD may recognize that the utterance includes that keyword and further determine that the speaker of the utterance is the particular user. Since the speaker of the custom keyword is the

particular user who configured the keyword, the NMD **703** is more confident that the detected utterance was intended as a voice input than the NMD **703** would otherwise be without this determination.

The speaker ID engine **773** may perform speaker recognition using any suitable technique. For example, the speaker ID engine **773** may implement a neural architecture to perform speaker identification on an utterance. The network is trained to take sound data (e.g., a spectrogram) as input and produce output representing similarity between one or more pre-determined speaker profiles and the input, which may correspond to users in a household (e.g., the media playback system **100** of FIG. **1**A). In this manner, the speaker ID engine **773** determines whether the voice input **755** matches a pre-determined speaker profile. Although the speaker ID engine **773** is shown by way of example as following the hybrid keyword detector **771** in the mini-SLU pipeline **770**, the speaker ID engine **773** may be implemented in parallel to the hybrid keyword detector **771** or as part of the voice front end **757**.

Example techniques for speaker recognition at the edge are described in "Utterance-Level Aggregation For Speaker Recognition In the Wild," by Weidi Xie et al., published on May 17, 2019, and available at https://arxiv.org/pdf/1902.10107.pdf, which is incorporated by reference herein in its entirety and reproduced below in Appendix A. Other suitable edge speaker recognition techniques may be utilized in various implementations. Speaker recognition techniques yet to be developed may increase accuracy and/or speed or speaker recognition at the edge.

As noted above, in some examples, detection of a known speaker profile is a condition on performing a command according to the intent of a voice input. In some cases, the NMD **703** imposes one or more additional conditions corresponding to the detected keywords in the voice input. These additional conditions may further lower the prevalence of false positives.

For instance, when a voice input includes a command keyword corresponding to a given command, the NMD **703** performs a command only when the targeted device(s) are in a state to perform the command. For instance, after detecting the command keyword "skip" as spoken by a known speaker profile, the NMD **703** performs skips to the next track) only when certain playback conditions indicating that a skip should be performed are met. These playback conditions may include, for example, (i) a first condition that a media item is being played back, (ii) a second condition that a queue is active, and (iii) a third condition that the queue includes a media item subsequent to the media item being played back. If any of these conditions are not satisfied, the command is not performed.

The NMD **703** may include one or more state machine(s) to facilitate determining whether the appropriate conditions are met. An example state machine transitions between a first state and a second state based on whether one or more conditions corresponding to the detected command keyword are met. In particular, for a given command keyword corresponding to a particular command requiring one or more particular conditions, the state machine **779***a* transitions into a first state when one or more particular conditions are satisfied and transitions into a second state when at least one condition of the one or more particular conditions is not satisfied.

Within example implementations, the command conditions are based on states indicated in state variables. As noted above, the devices of the MPS **100** may store state variables describing the state of the respective device in various aspects. For instance, the playback devices **102** may store state variables indicating the state of the playback devices **102**, such as the audio content currently playing (or paused), the volume levels, network connection status, and the like). These state variables are updated (e.g., periodically, or based on an event (i.e., when a state in a state variable changes)) and the state variables further can be shared among the devices of the MPS **100**, including the NMD **703**.

Similarly, the NMD **703** may maintain these state variables (either by virtue of being implemented in a playback device or as a stand-alone NMD). The state machine(s) monitor the states indicated in these state variables, and determines whether the states indicated in the appropriate state variables indicate that the command condition(s) are satisfied. Based on these determinations, the state machines transition between the first state and the second state, as described above.

In some implementations, voice inputs containing certain command keywords are not performed unless certain conditions have been met via the state machines. For example, the first state and the second state of the state machine may operate as enable/disable toggles for a given command keyword. In particular, while a state machine corresponding to a particular command keyword is in the first state, the state machine enables performing the particular command keyword when detected by the hybrid keyword detector **771**. Conversely, while the state machine corresponding to the particular command keyword is in the second state, the state machine disables performing the particular command keyword when detected by the hybrid keyword detector **771**.

Other example conditions may be based on the output of a voice activity detector ("VAD"), which may be implemented in the voice front-end **757**. The VAD is configured to detect the presence (or lack thereof) of voice activity in the sound-data stream S_{DS}. In particular, the VAD **76** may analyze frames corresponding to the pre-roll portion of the voice input **755** (FIG. **2**D) with one or more voice detection algorithms to determine whether voice activity was present in the environment in certain time windows prior to a keyword portion of the voice input **755**.

The VAD may utilize any suitable voice activity detection algorithms. Example voice detection algorithms involve determining whether a given frame includes one or more features or qualities that correspond to voice activity, and further determining whether those features or qualities diverge from noise to a given extent (e.g., if a value exceeds a threshold for a given frame). Some example voice detection algorithms involve filtering or otherwise reducing noise in the frames prior to identifying the features or qualities.

In some examples, the VAD may determine whether voice activity is present in the environment based on one or more metrics. For example, the VAD can be configured to distinguish between frames that include voice activity and frames that don't include voice activity. The frames that the VAD determines have voice activity may be caused by speech regardless of whether it near- or far-field. In this example and others, the VAD may determine a count of frames in the pre-roll portion of the voice input **755** that indicate voice activity. If this count exceeds a threshold percentage or number of frames, the VAD may be configured to output a signal or set a state variable indicating that voice activity is present in the environment. Other metrics may be used as well in addition to, or as an alternative to, such a count.

The presence of voice activity in an environment may indicate that a voice input is being directed to the NMD **703**. Accordingly, when the VAD indicates that voice activity is

not present in the environment (perhaps as indicated by a state variable set by the VAD) this may be configured as one of the command conditions for the local keywords. When this condition is met (i.e., the VAD indicates that voice activity is present in the environment), the state machine will transition to the first state to enable performing commands based on local keywords, so long as any other conditions for a particular local keyword are satisfied.

Further, in some implementations, the NMD **703** may include a noise classifier. The noise classifier is configured to determine sound metadata (frequency response, signal levels, etc.) and identify signatures in the sound metadata corresponding to various noise sources. The noise classifier may include a neural network or other mathematical model configured to identify different types of noise in detected sound data or metadata. One classification of noise may be speech (e.g., far-field speech). Another classification, may be a specific type of speech, such as background speech, an example of which is described in greater detail with reference to FIG. **8**. Background speech may be differentiated from other types of voice-like activity, such as more general voice activity (e.g., cadence, pauses, or other characteristics) of voice-like activity detected by the VAD.

For example, analyzing the sound metadata can include comparing one or more features of the sound metadata with known noise reference values or a sample population data with known noise. For example, any features of the sound metadata such as signal levels, frequency response spectra, etc. can be compared with noise reference values or values collected and averaged over a sample population. In some examples, analyzing the sound metadata includes projecting the frequency response spectrum onto an eigenspace corresponding to aggregated frequency response spectra from a population of NMDs. Further, projecting the frequency response spectrum onto an eigenspace can be performed as a pre-processing step to facilitate downstream classification.

In various embodiments, any number of different techniques for classification of noise using the sound metadata can be used, for example machine learning using decision trees, or Bayesian classifiers, neural networks, or any other classification techniques. Alternatively or additionally, various clustering techniques may be used, for example K-Means clustering, mean-shift clustering, expectation-maximization clustering, or any other suitable clustering technique. Techniques to classify noise may include one or more techniques disclosed in U.S. application Ser. No. 16/227,308 filed Dec. 20, 2018, and titled "Optimization of Network Microphone Devices Using Noise Classification," which is herein incorporated by reference in its entirety.

In some implementations, an additional buffer may store information (e.g., metadata or the like) regarding the detected sound S_D that was processed by the upstream AEC and spatial processor. This additional buffer may be referred to as a "sound metadata buffer." Examples of such sound metadata include: (1) frequency response data, (2) echo return loss enhancement measures, (3) voice direction measures; (4) arbitration statistics; and/or (5) speech spectral data. In example implementations, the noise classifier may analyze the sound metadata in the buffer to classify noise in the detected sound S_D.

As noted above, one classification of sound may be background speech, such as speech indicative of far-field speech and/or speech indicative of a conversation not involving the NMD **703**. The noise classifier may output a signal and/or set a state variable indicating that background speech is present in the environment. The presence of voice activity (i.e., speech) in the pre-roll portion of the voice input **755** indicates that the voice input **755** might not be directed to the NMD **703**, but instead be conversational speech within the environment. For instance, a household member might speak something like "our kids should have a play date soon" without intending to direct the command keyword "play" to the NMD **703**.

Further, when the noise classifier indicates that background speech is present is present in the environment, this condition may disable the mini-SLU pipeline **770** and/or the local voice input pipeline **770**. In some implementations, the condition of background speech being absent in the environment (perhaps as indicated by a state variable set by the noise classifier) is configured as one of the command conditions for the command keywords.

Further, the noise classifier may determine whether background speech is present in the environment based on one or more metrics. For example, the noise classifier may determine a count of frames in the pre-roll portion of the voice input **755** that indicate background speech. If this count exceeds a threshold percentage or number of frames, the noise classifier may be configured to output the signal or set the state variable indicating that background speech is present in the environment. Other metrics may be used as well in addition to, or as an alternative to, such a count.

Referring still to FIG. **7**C, in example embodiments, the voice back end including the wake-word engines **758**, the local voice input pipeline **760**, and the mini-SLU pipeline **770** may take a variety of forms. For instance, these components may take the form of one or more modules that are stored in memory of the NMD **703** (e.g., the memory **713** of FIG. **7**A). As another example, these components may take the form of a general-purposes or special-purpose processor, or modules thereof. In this respect, the wake-word engines **758**, the local voice input pipeline **760**, and the mini-SLU pipeline **770** may be part of the same physical component of the NMD **703** or each of the wake-word engines **758**, the local voice input pipeline **760**, and the mini-SLU pipeline **770** may take the form of a dedicated component. Other possibilities also exist.

IV. Example Local Voice Control Scenarios

As noted above, the NMD **703** may perform local ("offline") voice input processing. As noted above, the NMD **703** may perform local voice input processing using a local voice input engine **760** or a mini-SLU pipeline **770**. FIGS. **8**A, **8**B, **8**C, and **8**D present example local voice input processing sequences.

FIG. **8**A shows an example sequence **881** of the NMD **703** processing an utterance by a user **123***a*. At **881***a*, the user **123***a* speaks an utterance "party time" corresponding to a custom keyword. This custom keyword may have been pre-configured by the user **123***a* to perform a command or a set of commands. For instance, the user configures the "party time" custom keyword to group a set of playback devices, such as the playback devices in the Kitchen **101***h*, the Living Room **101***f*, and the Dining Room **101***g* (FIG. **1**A), and to start playing back a particular playlist on the grouped devices.

At **881***b*, the microphones capture this utterance as a voice input **755***a* and provide detected sound, S_D, to the voice front end **757**. At **881***c*, the voice front end **757** processes the sound data and provides the sound-data stream S_{DS} to the parallel voice processing pipelines, including the mini-SLU pipeline **770**. The other parallel voice input processing pipelines are shown in FIG. **7**C.

At **881***d*, the hybrid keyword detector **771** of the mini-SLU pipeline **770** performs keyword spotting on the sound-data stream S_{DS} using the neural architecture **775**. The output layer **777** of the mini-SLU pipeline **770** generates confidence scores predicting whether each trained keyword is in the sound-data stream S_{DS}. Recall that the weights of the output layer **777** that produce the confidence scores are not necessarily trained directly (and typically not trained directly for custom keywords), but rather predicted by the keyword encoder **778** (FIG. **7**D).

Here, the hybrid keyword detector **771** spots the custom keyword "party time" and generates a keyword detection event. In this case, the confidence score for the keyword "party time" is 0.642. In this example, the threshold is 0.5, so the hybrid keyword detector **771** considers the voice input **755***a* to include this keyword. The confidence scores for the other keywords trained on the neural architecture **775** are not shown. In this example, they would be near zero indicating that it's unlikely that these other keywords appear in the sound-data stream S_{DS}.

At **881***e*, the speaker ID engine **773** determines whether the voice input **755***a* matches a pre-determined speaker profile. In this example, the NMD **703** has stored two pre-determined speaker profiles corresponding to the user **123***a* and a user **123***b*. Here, the speaker ID engine **773** determines that the voice input matches the pre-determined speaker profile corresponding to the user **123***a*.

Based on generating the keyword event and determining that the voice input **755***a* includes sound data matching one of the predetermined speaker profiles, the NMD **703** performs one or more commands associated with the keyword. In this case, the NMD **703** instructs the playback devices **102** in the Kitchen **101***h*, the Living Room **101***f*, and the Dining Room **101***g* to form a synchrony group and to start playing back a particular playlist.

FIG. **8**B shows an example sequence **882** of the NMD **703** processing an utterance by a user **123***b*. At **882***a*, the user **123***b* speaks an utterance "turn on patio lights," which includes a pre-loaded keyword ("turn on") and a custom keyword "patio lights". This custom keyword may have been pre-configured by the user **123***a* to refer to a smart illumination device.

At **882***b*, the microphones capture this utterance as a voice input **755***b* and provide detected sound, S_D, to the voice front end **757**. At **882***c*, the voice front end **757** processes the sound data and provides the sound-data stream S_{DS} to the parallel voice processing pipelines, including the mini-SLU pipeline **770**. The other parallel voice input processing pipelines are shown in FIG. **7**C.

At **882***d*, the hybrid keyword detector **771** of the mini-SLU pipeline **770** performs keyword spotting on the sound-data stream S_{DS} using the neural architecture **775**. The output layer **777** of the mini-SLU pipeline **770** generates confidence scores predicting whether each trained keyword is in the sound-data stream S_{DS}. Recall that the weights of the output layer **777** that produce the confidence scores for pre-loaded keywords may be trained with keyword-specific training data, which may result in the hybrid keyword detector **771** having relatively greater confidence in detecting pre-loaded keywords.

Here, the hybrid keyword detector **771** spots the pre-loaded keyword "turn on" and generates a keyword detection event. In this case, the confidence score for the keyword "turn on" is 0.834 and the confidence score for the keyword "patio lights" is 0.417. As noted above, the threshold is 0.5, so the hybrid keyword detector **771** considers the voice input **755***b* to include the keyword "turn on" but has not predicted the presence of the keyword "patio lights" with sufficient confidence.

However, in this example, the hybrid keyword detector **771** spotted the ("low-confidence") custom keyword "patio lights" in the voice input **755***b* with the pre-loaded ("high-confidence"). Accordingly, the mini-SLU pipeline **770** can be more confident that the patio lights keyword is intended as a voice input. As such, at **882***e*, the mini-SLU pipeline **770** adjusts the confidence score upward (by an exemplary 0.1 adjustment). This gives the custom keyword "patio lights" an adjusted confidence score of 0.517, which exceeds the threshold.

At **882***f*, the speaker ID engine **773** determines whether the voice input **755***b* matches a pre-determined speaker profile. As noted above, the NMD **703** has stored two pre-determined speaker profiles corresponding to the user **123***a* and a user **123***b*. Here, the speaker ID engine **773** determines that the voice input matches the pre-determined speaker profile corresponding to the user **123***b*.

Based on generating the keyword event and determining that the voice input **755***b* includes sound data matching a predetermined speaker profile, the NMD **703** performs one or more commands associated with the keyword. In this case, the NMD **703** instructs the smart illumination device with the name "patio lights" to turn on.

FIG. **8**C shows an example sequence **883** of the NMD **703** processing an utterance by a user **123***c*. At **883***a*, the user **123***c* speaks an utterance "pause" corresponding to a pre-loaded keyword.

At **883***b*, the microphones capture this utterance as a voice input **755***c* and provide detected sound, S_D, to the voice front end **757**. At **883***c*, the voice front end **757** processes the sound data and provides the sound-data stream S_{DS} to the parallel voice processing pipelines, including the mini-SLU pipeline **770**. The other parallel voice input processing pipelines are shown in FIG. **7**C.

At **883***d*, the hybrid keyword detector **771** of the mini-SLU pipeline **770** performs keyword spotting on the sound-data stream S_{DS} using the neural architecture **775**. The output layer **777** of the mini-SLU pipeline **770** generates confidence scores predicting whether each trained keyword is in the sound-data stream S_{DS}.

Here, the hybrid keyword detector **771** spots the pre-loaded keyword "pause" and generates a keyword detection event. In this case, the confidence score for the keyword "pause" is 0.891. In this example, the threshold is 0.5, so the hybrid keyword detector **771** considers the voice input **755***c* to include this keyword. The confidence scores for the other keywords trained on the neural architecture **775** are not shown. In this example, they would be near zero indicating that it's unlikely that these other keywords appear in the sound-data stream S_{DS}.

At **883***e*, the speaker ID engine **773** determines whether the voice input **755***c* matches a pre-determined speaker profile. In this example, the NMD **703** has stored two pre-determined speaker profiles corresponding to the user **123***a* and a user **123***b*. Here, the speaker ID engine **773** determines that the voice input spoken by the user **123***c* does not match the pre-determined speaker profile corresponding to the user **123***a* or the user **123***c*.

Based on generating the keyword event and determining that the voice input **755***a* includes sound data that does not match one of the predetermined speaker profiles, the NMD **703** forgoes performs commands associated with the keyword. That is, even though the hybrid keyword detector **771**

spotted the keyword "pause" with high confidence exceeding the threshold, the NMD **703** does not perform the corresponding command.

In some implementations, the mini-SLU pipeline **770** may implement two or more thresholds corresponding to different confidence levels. For instance, a mini-SLU pipeline **770** may implement a first threshold (e.g., **0.5**) and a second higher threshold (e.g., **0.85**). If a confidence score for a keyword exceeds the first threshold but is lower than the second threshold, the mini-SLU pipeline **770** requires the voice input to match a pre-determined speaker profile. However, if the confidence score for a keyword exceeds the second threshold, the mini-SLU pipeline **770** performs the corresponding command without the voice input necessarily matching a pre-determined speaker profile. In other words, because of the high confidence score, the mini-SLU pipeline **770** may assume that the spotted keyword is not a false positive detection.

As noted above, some voice inputs may be processed by the local voice input pipeline **760**. FIG. **8**D shows an example sequence **884** of the NMD **703** processing an utterance by a user **123***a* using the local voice input pipeline **760**. At **884***a*, the user **123***a* speaks an utterance "play Mitski in the Living Room."

The mini-SLU pipeline **770** may concurrently process this voice input, but may not be able to derive the intent because the neural architecture **775** is not trained to detect certain keywords, such as the content name (the artist "Mitski"). As such, the mini-SLU pipeline **770** may automatically operate as a secondary processing pipeline to the mini-SLU pipeline **770**. Alternatively, as noted above, some implementations of the NMD **703** might not include the mini-SLU pipeline **770** and so FIG. **8**D may represent exemplary processing of a voice input by an implementation of the NMD **703** that does not include the mini-SLU pipeline **770**.

At **884***b*, the microphones capture this utterance as a voice input **755***d* and provide detected sound, S_D, to the voice front end **757**. At **884***c*, the voice front end **757** processes the sound data and provides the sound-data stream S_{DS} to the parallel voice processing pipelines, including the local voice input pipeline **760** and the mini-SLU pipeline **770** (not shown).

At **884***d*, the ASR **761** of the local voice input pipeline **760** performs automatic speech recognition on the sound-data stream S_{DS}. Then, at **884***e*, the local NLU **762** performs keyword spotting on the output of the sound-data stream S_{DS}. Similar to the hybrid keyword detector **771**, the local NLU **762** generates confidence scores predicting certain keywords are present.

Here, the local NLU **762** spot the keywords "play" and generates a keyword detection event. In this case, the confidence score for the keyword "play" is 0.789. The confidence scores for "Mitski" keyword and the "living room" keyword are 0.313 and 0.598, respectively. In this example, the threshold is 0.5, so the local NLU **762** considers the voice input **755***d* to include the keyword "play" and "living room" but has not determined the presence of the keyword "Mitksi" with sufficient confidence.

However, in this example, the local NLU **762** spotted the relatively low-confidence keyword "Miski" in the voice input **755***d* with the relatively high-confidence keywords "play" and "living room." Accordingly, at **884***f*, the local NLU **762** can be more confident that the "Mitski" keyword is intended as a voice input. The local NLU **762** adjusts the confidence score upward (by an exemplary 0.2 adjustment). This gives the keyword "Miski" an adjusted confidence score of 0.513, which exceeds the threshold.

Based on determining the intent of the voice input **884***d*, the NMD **703** performs one or more commands according to the determined intent. In this case, the NMD **703** starts the playback devices in the living room **101***f* (FIG. **1**A) to start playing audio tracks by the artist Mitski from the default source (e.g., a default streaming audio service).

In example implementations, the NMD **703** is paired with one or more smart devices. FIG. **9** illustrates an example pairing arrangement between the NMD **703** and a smart device **902**, which includes an integrated playback device and smart illumination device. By pairing the NMD **703** with the smart device(s), voice commands to control the smart device(s) may be directed to the NMD **703** to control the smart device(s) without necessarily including a keyword identifying the smart device(s) in the voice command. For instance, commands such as "play back Better Oblivion Community Center" and "turn on lights" are received by the NMD **703**, but carried out on the smart device **809** without necessarily identifying the smart device **809** by name, room, zone, or the like. On the other hand, a user may still direct inputs to other smart devices in the MPS **100** by referencing the name, room, zone, group, area, etc. that the smart device is associated with.

Within examples, a user may configure the pairing arrangement using a graphical user interface or voice user interface. For instance, the user may use a GUI on a application of a control device **104** to configure the pairing arrangement. Alternatively, the user may speak a voice command such as "Please pair with the Ikea® lamp" or "Please pair with the Sonos® Play:1" to configure the pairing relationship. The NMD **703** may store data representing the pairing arrangement in one or more state variables, which may be referenced when identifying a device to carry out a voice command.

Further, in the exemplary pairing relationship of FIG. **9**, the smart device **902** may play back audio responses to voice inputs. As noted above, the NMD **703** may, in some examples, exclude audio playback components typically present in a playback device (e.g., audio processing components **216**, amplifiers **217**, and/or speakers **218**) or may include relatively less capable versions of these components. By pairing the NMD **703** to a playback device, the playback device may provide playback functions to complement the NMD, including playback of audio responses to voice inputs captured by the NMD **703** and playback of audio content initiated via voice command to the NMD **703**.

For instance, the user may speak the voice input "Alexa, what is the weather," which is captured by the microphones **722***b* (FIG. **7**C) of the NMD **703**. The NMD **703** transmits data representing this voice input to the servers **106***a* of the VAS **190**. The servers **106***a* process this voice input and provide data representing a spoken response. In some implementations, the smart device **902** receives this data directly from the computing devices **106***a* of the VAS **190** via the networks **107** and the LAN **111**. Alternatively, the NMD **703** may receive the data from the VAS **190**, but send the data to the smart device **902**. In either case, the playback device **902** plays back the spoken response.

As noted above, in some instances, voice input processing via the VAS **190** and voice input processing via the local voice input pipeline **760** and/or mini-SLU pipeline **770** may be concurrently enabled. In an example, a user may speak the voice input "Alexa, play 'Hey Jude' by the Beatles and turn on the Ikea lamps." Here, "Alexa" is an example of a VAS wake word and "Ikea" is an example of a local

keyword. Accordingly, such an input may generate both a VAS wake work event and one or more local events on the NMD **703**.

As described earlier, a user may configure a custom keyword using a graphical user interface. FIG. **10**A shows an example controller interface **1040** displayed on a controller device **104** to facilitate configuring a custom keyword. The controller interface **1040** includes a first region **1191** configured to receive entry of text as a string. As discussed in connection with the neural architecture **775**, the keyword encoder **778** may predict the weights used in the output layer **777** to detect custom keywords.

The controller interface **1040** further includes a second region **1092** with selectable controls corresponding to various commands. By way of example, the commands "play" and "turn on" are shown with respective selectable controls. Further example commands may be selectable as well. The second region **1092** may be scrollable to select additional commands.

The controller interface **1040** also includes a third region **1093** with selectable controls corresponding to various targets for the command selected in the second region **1092**. To illustrate, selectable controls corresponding to the Living Room **101***f* and the Kitchen **101***h* (FIG. **1**A) are shown, as well as a selectable control corresponding to the NMD that detects a voice input including the custom keyword. Further example targets may be selectable as well. The third region **1093** may be scrollable to select additional commands.

A fourth region **1094** may include selectable controls corresponding to the selected command. To illustrate, in FIG. **10**B, a user has provided a custom keyword "party time" in the first region **1191** and selected the command "play" and the targets as the Living Room **101***f* and the Kitchen **101***h*. Then, the fourth region **1094** is populated with selectable controls corresponding to various playlists and other media items to select as content for the play command.

In some examples, the NMD **703** may configure the hybrid keyword detector **771** or the local NLU **672** to detect custom keywords that are not provided directly by the user, but nonetheless correspond to the user. The respective set of keywords that the hybrid keyword detector **771** or local NLU **672** are trained to spot are referred to collectively as the library of the NMD **703**. Training the hybrid keyword detector **771** and/or the local NLU **672** may be referred to as populating the library. While these respective sets are referred to collectively, since the hybrid keyword detector **771** and the local NLU **672** are trained separately using different techniques, the sets of keywords that each component is trained to detect are not necessarily the same. Further, to maintain the small footprint of the mini-SLU pipeline **770**, the hybrid keyword detector **771** will generally not be trained to detect as many keywords as the local NLU **672**.

In a first aspect, the library may be customized to the devices that are within the household of the NMD (e.g., the household within the environment **101** (FIG. **1**A)). For instance, the library may include keywords corresponding to the names of the devices within the household, such as the zone names of the playback devices **102** in the MPS **100**. In a second aspect, the library may be customized to the users of the devices within the household. For example, the library may include keywords corresponding to names or other identifiers of a user's preferred playlists, artists, albums, and the like. Then, the user may refer to these names or identifiers in voice inputs.

Within example implementations, the NMD **703** may populate the library locally within the network **111** (FIG. **1**B). As noted above, the NMD **703** may maintain or have access to state variables indicating the respective states of devices connected to the network **111** (e.g., the playback devices **104**). These state variables may include names of the various devices. For instance, the kitchen **101***h* may include the playback device **101***b*, which are assigned the zone name "Kitchen." The NMD **703** may read these names from the state variables and include them in the library by training the hybrid keyword detector **771** and/or the local NLU **672** to recognize them as keywords. The keyword entry for a given name may then be associated with the corresponding device in an associated parameter (e.g., by an identifier of the device, such as a MAC address or IP address). The NMD **703***a* can then use the parameters to customize control commands and direct the commands to a particular device.

In further examples, the NMD **703** may populate the library by discovering devices connected to the network **111**. For instance, the NMD **703***a* may transmit discovery requests via the network **111** according to a protocol configured for device discovery, such as universal plug-and-play (UPnP) or zero-configuration networking. Devices on the network **111** may then respond to the discovery requests and exchange data representing the device names, identifiers, addresses and the like to facilitate communication and control via the network **111**. The NMD **703** may read these names from the exchanged messages and include them in the library by training the hybrid keyword detector **771** and/or the local NLU **672** to recognize them as keywords.

In further examples, the NMD **703** may populate the library using the cloud. To illustrate, FIG. **11** is a schematic diagram of the MPS **100** and a cloud network **1002**. The cloud network **1002** includes cloud servers **1006**, identified separately as media playback system control servers **1006***a*, streaming audio service servers **1006***b*, and IOT cloud servers **1006***c*. The streaming audio service servers **1006***b* may represent cloud servers of different streaming audio services. Similarly, the IOT cloud servers **1006***c* may represent cloud servers corresponding to different cloud services supporting smart devices **1090** in the MPS **100**. Smart devices **1090** include smart illumination devices, smart thermostats, smart plugs, security cameras, doorbells, and the like.

Within examples, a user may link an account of the MPS **100** to an account of an IOT service. For instance, an IOT manufacturer (such as IKEA®) may operate a cloud-based IOT service to facilitate cloud-based control of their IOT products using smartphone app, website portal, and the like. In connection with such linking, the hybrid keyword detector **771** and/or the local NLU **672** may be trained with keywords associated with the cloud-based service and the IOT devices. For instance, the local NLU **672** may be trained with a nonce keyword (e.g., "Hey Ikea"). Further, the hybrid keyword detector **771** and/or the local NLU **672** may be trained to detected names of various IOT devices, keyword commands for controlling the IOT devices, and keywords corresponding to parameters for the commands.

One or more communication links **1003***a*, **1003***b*, and **1003***c* (referred to hereinafter as "the links **1003**") communicatively couple the MPS **100** and the cloud servers **1006**. The links **1003** can include one or more wired networks and one or more wireless networks (e.g., the Internet). Further, similar to the network **111** (FIG. **1**B), a network **1011** communicatively couples the links **1003** and at least a portion of the devices (e.g., one or more of the playback devices **102**, NMDs **103**, control devices **104**, and/or smart devices **1090**) of the MPS **100**.

In some implementations, the media playback system control servers **1006***a* facilitate populating the library. In an example, the media playback system control servers **1006***a* may receive data representing a request to populate the library from the NMD **703***a*. Based on this request, the media playback system control servers **1006***a* may communicate with the streaming audio service servers **1006***b* and/or IOT cloud servers **1006***c* to obtain keywords specific to the user.

In some examples, the media playback system control servers **1006***a* may utilize user accounts and/or user profiles in obtaining keywords specific to the user. As noted above, a user of the MPS **100** may set-up a user profile to define settings and other information within the MPS **100**. The user profile may then in turn be registered with user accounts of one or more streaming audio services to facilitate streaming audio from such services to the playback devices **102** of the MPS **100**.

Through use of these registered streaming audio services, the streaming audio service servers **1006***b* may collect data indicating a user's saved or preferred playlists, artists, albums, tracks, and the like, either via usage history or via user input (e.g., via a user input designating a media item as saved or a favorite). This data may be stored in a database on the streaming audio service servers **1006***b* to facilitate providing certain features of the streaming audio service to the user, such as custom playlists, recommendations, and similar features. Under appropriate conditions (e.g., after receiving user permission), the streaming audio service servers **1006***b* may share this data with the media playback system control servers **1006***a* over the links **1003***b*.

Accordingly, within examples, the media playback system control servers **1006***a* may maintain or have access to data indicating a user's saved or preferred playlists, artists, albums, tracks, genres, and the like. If a user has registered their user profile with multiple streaming audio services, the saved data may include saved playlists, artists, albums, tracks, and the like from two or more streaming audio services. Further, the media playback system control servers **1006***a* may develop a more complete understanding of the user's preferred playlists, artists, albums, tracks, and the like by aggregating data from the two or more streaming audio services, as compared with a streaming audio service that only has access to data generated through use of its own service.

Moreover, in some implementations, in addition to the data shared from the streaming audio service servers **1006***b*, the media playback system control servers **1006***a* may collect usage data from the MPS **100** over the links **1003***a*, after receiving user permission. This may include data indicating a user's saved or preferred media items on a zone basis. Different types of music may be preferred in different rooms. For instance, a user may prefer upbeat music in the Kitchen **101***h* and more mellow music to assist with focus in the Office **101***e*.

Using the data indicating a user's saved or preferred playlists, artists, albums, tracks, and the like, the media playback system control servers **1006***a* may identify names of playlists, artists, albums, tracks, and the like that the user is likely to refer to when providing playback commands to the NMDs **703** via voice input. Data representing these names can then be transmitted via the links **1003***a* and the network **1004** to the NMDs **703** and then added to the library as keywords. For instance, the media playback system control servers **1006***a* may send instructions to the NMD **703** to train the hybrid keyword detector **771** and/or the local NLU **672** to spot certain names as keywords. Alternatively, the NMD **703** (or another device of the MPS **100**) may identify names of playlists, artists, albums, tracks, and the like that the user is likely to refer to when providing playback commands to the NMD **703** via voice input and then train the hybrid keyword detector **771** and/or the local NLU **672** to spot these names.

Due to such customization, similar voice inputs may result in different operations being performed when the voice input is processed locally as compared with processing by a VAS. For instance, a first voice input of "Alexa, play me my favorites in the Office" may trigger a VAS wake-word event, as it includes a VAS wake word ("Alexa"). A second voice input of "Play me my favorites in the Office" may trigger a command keyword, as it includes a command keyword ("play"). Accordingly, the first voice input is sent by the NMD **703** to the VAS, while the second voice input is processed locally.

While these voice inputs are nearly identical, they may cause different operations. In particular, the VAS may, to the best of its ability, determine a first playlist of audio tracks to add to a queue of the playback device **102***f* in the office **101***e*. Similarly, the local NLU **776** may recognize keywords "favorites" and "kitchen" in the second voice input. Accordingly, the NMD **703** performs the voice command of "play" with parameters of <favorites playlist> and <kitchen **101***h* zone>, which causes a second playlist of audio tracks to be added to the queue of the playback device **102***f* in the office **101***e*. However, the second playlist of audio tracks may include a more complete and/or more accurate collection of the user's favorite audio tracks, as the second playlist of audio tracks may draw on data indicating a user's saved or preferred playlists, artists, albums, and tracks from multiple streaming audio services, and/or the usage data collected by the media playback system control servers **1006***a*. In contrast, the VAS may draw on its relatively limited conception of the user's saved or preferred playlists, artists, albums, and tracks when determining the first playlist.

A household may include multiple users. Two or more users may configure their own respective user profiles with the MPS **100**. Each user profile may have its own user accounts of one or more streaming audio services associated with the respective user profile. Further, the media playback system control servers **1006***a* may maintain or have access to data indicating each user's saved or preferred playlists, artists, albums, tracks, genres, and the like, which may be associated with the user profile of that user.

In various examples, names corresponding to user profiles may be populated in the library. This may facilitate referring to a particular user's saved or preferred playlists, artists, albums, tracks, or genres. For instance, when a voice input of "Play Anne's favorites on the patio" is processed by the local NLU **762**, the local NLU **762** may determine that "Anne" matches a stored keyword corresponding to a particular user. Then, when performing the playback command corresponding to that voice input, the NMD **703** adds a playlist of that particular user's favorite audio tracks to the queue of the playback device **102***c* in the patio **101***i*.

In some cases, a voice input might not include a keyword corresponding to a particular user, but multiple user profiles are configured with the MPS **100**. In some cases, the NMD **703***a* may determine the user profile to use in performing a command using voice recognition, such as the speaker ID engine **773**. Although shown as part of the mini-SLU pipeline **770** by way of example, the speaker ID engine **773** may be implemented in a manner accessible to the local voice input engine **770**. Alternatively, the NMD **703***a* may default to a certain user profile. Further, the NMD **703** may

use preferences from the multiple user profiles when performing a command corresponding to a voice input that did not identify a particular user profile. For instance, the NMD **703** may determine a favorites playlist including preferred or saved audio tracks from each user profile registered with the MPS **100**.

The IOT cloud servers **1006***c* may be configured to provide supporting cloud services to the smart devices **1090**. The smart devices **1090** may include various "smart" internet-connected devices, such as lights, thermostats, cameras, security systems, appliances, and the like. For instance, an IOT cloud server **1006***c* may provide a cloud service supporting a smart thermostat, which allows a user to control the smart thermostat over the internet via a smartphone app or website.

Accordingly, within examples, the IOT cloud servers **1006***c* may maintain or have access to data associated with a user's smart devices **1090**, such as device names, settings, and configuration. Under appropriate conditions (e.g., after receiving user permission), the IOT cloud servers **1006***c* may share this data with the media playback system control servers **1006***a* and/or the NMD **703** via the links **1003***c*. For instance, the IOT cloud servers **1006***c* that provide the smart thermostat cloud service may provide data representing such keywords to the NMD **703**, which facilitates populating the library with keywords corresponding to the temperature.

Yet further, in some cases, the IOT cloud servers **1006***c* may also provide keywords specific to control of their corresponding smart devices **1090**. For instance, the IOT cloud server **1006***c* that provides the cloud service supporting the smart thermostat may provide a set of keywords corresponding to voice control of a thermostat, such as "temperature," "warmer," or "cooler," among other examples. Data representing such keywords may be sent to the NMD **703** over the links **1003** and the network **1004** from the IOT cloud servers **1006***c*.

As noted above, some households may include more than NMD **703**. In example implementations, two or more NMDs **703** may synchronize or otherwise update their libraries. For instance, a first NMD **703***a* and a second NMD **703***b* may share data representing their respective libraries, possibly using a network (e.g., the network **904**). Such sharing may facilitate the NMDs **703***a* being able to respond to voice input similarly, among other possible benefits.

In some embodiments, one or more of the components described above can operate in conjunction with the microphones **722** to detect and store a user's pre-determined speaker profile, which may be associated with a user account of the MPS **100**. In some embodiments, speaker profiles may be stored as and/or compared to variables stored in a set of command information or data table. The voice profile may include aspects of the tone or frequency of a user's voice and/or other unique aspects of the user, such as those described in previously-referenced U.S. patent application Ser. No. 15/438,749.

In some embodiments, one or more of the components described above can operate in conjunction with the microphones **722** to determine the location of a user in the home environment and/or relative to a location of one or more of the NMDs **103**. Techniques for determining the location or proximity of a user may include one or more techniques disclosed in previously-referenced U.S. patent application Ser. No. 15/438,749, U.S. Pat. No. 9,084,058 filed Dec. 29, 2011, and titled "Sound Field Calibration Using Listener Localization," and U.S. Pat. No. 8,965,033 filed Aug. 31, 2012, and titled "Acoustic Optimization." Each of these applications is herein incorporated by reference in its entirety.

V. First Example Local Voice Control Techniques

FIG. **12** is a flow diagram showing an example method **1200** to perform local voice control. The method **1200** may be performed by a networked microphone device, such as the NMD **703** (FIG. **7**A). Alternatively, the method **1200** may be performed by any suitable device or by a system of devices, such as the playback devices **102**, NMDs **103**, control devices **104**, computing devices **105**, computing devices **106**, and/or NMD **703**.

At block **1202**, the method **1200** includes monitoring an input sound-data stream representing sound detected by the one or more microphones for (i) a voice assistant service (VAS) wake word and (ii) one or more keywords. For instance, the NMD **703** may monitor the input sound-data stream S_{DS} via the wake-word engine **758***a* for a wake word associated with a voice assistant service (FIG. **7**C). Further, the hybrid keyword detector **771** of the mini-SLU pipeline **770** may concurrently monitor the sound-data stream S_{DS} for one or more keywords (FIG. **7**C). Additionally or alternatively, the wake-word engine **758***b* may concurrently monitor the sound-data stream S_{DS} for one or more local keywords (FIG. **7**C).

At block **1204**, the method **1200** includes generating a first wake-word detection event corresponding to a first voice input when sound data matching the VAS keyword is detected. For, instance, the wake-word engine **758***a* may generate a VAS wake-word event corresponding to a first voice input when the wake-word engine **758***a* detects sound data matching the VAS wake word in the sound-data stream S_{DS} (FIG. **7**C).

At block **1206**, the method **1200** includes causing the voice assistant service to process the first voice input. For instance, based on generating VAS wake-word event corresponding to the first voice input, the NMD **703** may cause the voice extractor **759** to receive and format (e.g., packetize) the sound-data stream S_{DS} into messages and then transmit or stream these messages, M_V, to a remote VAS via the network interface **724** (FIG. **7**C). The VAS receives these messages, M_V, processes the voice input (e.g., performs spoken language understanding to determine an intent of the voice input), and then transmits back one or more instructions to perform a command according to the determined intent.

At block **1208**, the method **1200** includes generating a first keyword detection event corresponding to a second voice input when sound data matching at least one first keyword is detected. For example, the hybrid keyword detector **771** of the mini-SLU pipeline **770** may generate a keyword detection event corresponding to a second voice input when at least one first keyword is spotted in the sound-data stream S_{DS} (FIG. **7**C). The hybrid keyword detector **771** may detect keywords using the neural architecture **775** (FIG. **7**D), among other examples.

At block **1210**, the method **1200** includes determining that the second voice input matches a particular predetermined speaker profile of one or more predetermined speaker profiles. For instance, the speaker ID engine **773** may determine whether the portion of the sound-data stream S_{DS} corresponding to second voice input matches a particular predetermined speaker profile of one or more predetermined

speaker profiles (FIG. 7C). Further exemplary operation of the speaker ID engine **773** is described in connection with FIGS. **8**A, **8**B, and **8**C.

Within examples, the method **1200** may involve monitoring the input sound-data stream for voice data that match the one or more predetermined speaker profiles. For example, the speaker ID engine **773** may monitor the sound-data stream S_{DS} for voice data that match the one or more predetermined speaker profiles. In such examples, determining that the second voice input matches the particular predetermined speaker profile may involve determining that a portion of the input sound-data stream corresponding to the second voice input includes particular voice data matching the particular predetermined speaker profile. In some examples, the speaker ID engine **773** may monitor the input sound-data stream for voice data concurrently with the hybrid keyword detector **771** monitoring the input sound-data stream for the one or more keywords.

At block **1212**, the method **1200** includes performing a particular command associated with the at least one first keyword. For instance, when the at least one first keyword is associated with a particular playback command, the NMD **703** may perform the particular playback command by instructing one or more playback devices to perform the particular playback command. Other examples are possible as well.

In some cases, a voice input does not match any speaker profile of one or more predetermined speaker profiles. For example, the method **1200** may further involve generating a second keyword detection event corresponding to a third voice input when the one or more keyword engines detect sound data matching at least one second keyword of the one or more keywords. For instance, the hybrid keyword detector **771** of the mini-SLU pipeline **770** may generate a second keyword detection event corresponding to a third voice input when the hybrid keyword detector **771** detects sound data matching at least one second keyword of the one or more keywords. The speaker ID engine **773** may determine that the third voice input does not match any of the one or more predetermined speaker profiles. Based on (i) generating the second keyword detection event and (ii) determining that the third voice input does not match any of the one or more predetermined speaker profiles, the method **1200** may involve foregoing processing of the third voice input.

In other cases, a voice input may include sound data matching both a VAS wake word and at least one keyword. In some implementations, the NMD **703** processes the voice input using the VAS in such circumstances. For instance, the method **1200** may involve generating a second wake-word detection event corresponding to a fourth voice input when the one or more keyword engines detect both (i) sound data matching the wake word in the input sound-data stream and (ii) sound data matching at least one keyword of the one or more keywords. Based on generating the second wake-word detection event, the method **1200** involves causing the voice assistant service to process the fourth voice input.

Within examples, the method **1200** further involves receiving data representing a command to associate the at least one first keyword of the one or more keywords with the particular predetermined speaker profile. As described above in connection with FIG. 7C, this association may indicate greater confidence in detecting keywords in a voice input, since the speaker of the keyword is the same user that configured the custom keyword. Based on receiving the data representing the command, the method **1200** involves storing, in the data storage, an association between the at least one first keyword and the particular predetermined speaker profile. In such cases, performing the particular command associated with the at least one first keyword is further may be further based on determining that there is a stored association between the at least one first keyword and the particular predetermined speaker profile in the data storage.

In some implementations, the method **1200** involves updating at least one of the one or more keyword engines with parameters corresponding to the particular predetermined speaker profile based on determining that the second voice input matches the particular predetermined speaker profile. That is, the weights of the output layer **777** may be adjusted to better train the neural architecture **775** to detect the keyword as spoken by the particular predetermined speaker profile. In other words, the recorded keyword as spoken by a particular user acts as keyword-specific training data to retrain the neural architecture **775**.

In some examples, the method **1200** further involves receiving string data representing one or more custom keywords corresponding to the particular predetermined speaker profile and training the neural network to detect the one or more custom keywords based on the string data. For example, the NMD **703** may receive string data from the control device **104**, which was received via graphical user interface such as the controller interface **1040** (FIG. **10**A). Other examples are possible as well.

VI. Second Example Local Voice Control Techniques

FIG. **13** is a flow diagram showing an example method **1300** to perform local voice control. The method **1300** may be performed by a networked microphone device, such as the NMD **703** (FIG. 7A). Alternatively, the method **1300** may be performed by any suitable device or by a system of devices, such as the playback devices **102**, NMDs **103**, control devices **104**, computing devices **105**, computing devices **106**, and/or NMD **703**.

At block **1302**, the method **1300** includes monitoring an input sound-data stream representing sound detected by the one or more microphones for one or more keywords. For instance, the wake-word engine **758***b* of the NMD **703** may monitor the sound-data stream S_{DS} for one or more local keywords (FIG. 7C). As another example, the hybrid keyword detector **771** of the mini-SLU pipeline **770** may monitor the sound-data stream S_{DS} for one or more keywords (FIG. 7C). Such monitoring may occur concurrently with the NMD **703** monitoring the sound-data stream S_{DS} via the wake-word engine **758***a* for a wake word associated with a voice assistant service (FIG. 7C).

At block **1304**, the method **1300** includes generating a first keyword detection event corresponding to a second voice input when sound data matching at least one first keyword is detected in the sound-data stream S_{DS}. For example, the wake-word engine **758***b* may generate a local keyword event when detecting a first keyword in the sound-data stream S_{DS}(FIG. 7C). As another example, the hybrid keyword detector **771** of the mini-SLU pipeline **770** may generate a keyword detection event corresponding to a second voice input when at least one first keyword is spotted in the sound-data stream S_{DS} (FIG. 7C).

At block **1306**, the method **1300** includes spotting (i) one or more pre-defined keywords and (ii) a user-defined keyword in the first voice input. For instance, the local voice input pipeline **760** may perform ASR and NLU on the first voice input using the ASR **761** and local NLU **762**. In performing ARS and NLU, the local voice input pipeline **760** may detect (i) one or more pre-defined keywords and (ii)

a user-defined keyword in the first voice input, as illustrated in the exemplary processing sequence **884** (FIG. **8**D). As another example, the mini-SLU pipeline **770** may perform keyword spotting on the first voice input using the hybrid keyword detector **771**. Such keyword spotting may result in spotting (i) one or more pre-defined keywords and (ii) a user-defined keyword in the first voice input, as illustrated in the exemplary processing sequence **882** of FIG. **8**B.

When keyword spotting, the NMD **703** may determine one or more confidence metrics indicating confidence in recognizing keywords from the keyword library in the first voice input. For instance, the NMD **703** may determine a first sub-metric indicating confidence in recognizing the particular user-defined keyword in the first voice input and one or more second sub-metrics indicating confidence in recognizing the one or more pre-loaded keywords from the keyword library in the first voice input. Exemplary determination of such sub-metrics are illustrated with the confidence scores for the individual keywords shown in the processing sequences **882** and **884** of FIGS. **8**B and **8**D, respectively.

At block **1308**, the method **1300** includes modifying a confidence metric to indicate increased confidence in detecting keywords from the keyword library in the first voice input. For instance, based detecting the one or more pre-defined keywords in combination with the first user-defined keyword, the local voice input pipeline **760** may increase a confidence score for the user-defined keyword, as illustrated in the exemplary processing sequence **884** (FIG. **8**D). As another example, the mini-SLU pipeline **770** may increase a confidence score for the user-defined keyword, as illustrated in the exemplary processing sequence **882** (FIG. **8**B).

In some cases, the NMD **703** may determine a confidence score for a voice input as a whole, perhaps based on confidence scores in spotting individual keywords. In such cases, modifying the confidence metric may involve modifying the confidence score for the voice input as a whole. Alternatively, as noted above, modifying the confidence metric may involve modifying the confidence scores for spotting individual keywords, which results in an increased confidence score for the voice input as a whole.

In some implementations, the method **1300** further includes determining that the modified confidence metric exceeds a confidence threshold. For instance, as discussed with respect to the exemplary processing sequences **882** and **884**, a confidence threshold may be set at 0.5. Based on (i) generating the first keyword detection event and (ii) determining that the modified confidence metric exceeds the confidence threshold, the method **1300** may involve performing a particular playback command corresponding to the detected keywords in the first voice input.

In some instances, the method **1300** may further involve detecting a second voice input that does not include any pre-defined keywords. In such examples, the method **1300** may further involve generating a second keyword detection event corresponding to a second voice input when the one or more keyword engines detect sound data matching a second keyword in the input sound-data stream and spotting a second user-defined keyword in the second voice input. The method may further involve determining a confidence metric indicating confidence in recognizing keywords in the second voice input, and based on not detecting pre-defined keywords in the second voice input, foregoing modifying the confidence metric to indicate increased confidence in detecting keywords in the second voice input.

Further, in some cases, a confidence score might not exceed a threshold. To illustrate, in some examples, the method **1300** may involve determining that the confidence metric indicating confidence in recognizing keywords in the second voice input does not meet a confidence threshold. Then, based on (i) generating the second keyword detection event and (ii) determining that the confidence metric indicating confidence in recognizing keywords from the keyword library in the second voice input does not meet a confidence threshold, the method **1300** involves foregoing performing a particular playback command corresponding to the detected keywords in the second voice input.

CONCLUSION

The description above discloses, among other things, various example systems, methods, apparatus, and articles of manufacture including, among other components, firmware and/or software executed on hardware. It is understood that such examples are merely illustrative and should not be considered as limiting. For example, it is contemplated that any or all of the firmware, hardware, and/or software aspects or components can be embodied exclusively in hardware, exclusively in software, exclusively in firmware, or in any combination of hardware, software, and/or firmware. Accordingly, the examples provided are not the only way(s) to implement such systems, methods, apparatus, and/or articles of manufacture.

The specification is presented largely in terms of illustrative environments, systems, procedures, steps, logic blocks, processing, and other symbolic representations that directly or indirectly resemble the operations of data processing devices coupled to networks. These process descriptions and representations are typically used by those skilled in the art to most effectively convey the substance of their work to others skilled in the art. Numerous specific details are set forth to provide a thorough understanding of the present disclosure. However, it is understood to those skilled in the art that certain embodiments of the present disclosure can be practiced without certain, specific details. In other instances, well known methods, procedures, components, and circuitry have not been described in detail to avoid unnecessarily obscuring aspects of the embodiments. Accordingly, the scope of the present disclosure is defined by the appended claims rather than the forgoing description of embodiments.

When any of the appended claims are read to cover a purely software and/or firmware implementation, at least one of the elements in at least one example is hereby expressly defined to include a tangible, non-transitory medium such as a memory, DVD, CD, Blu-ray, and so on, storing the software and/or firmware.

The present technology is illustrated, for example, according to various aspects described below. Various examples of aspects of the present technology are described as numbered examples (1, 2, 3, etc.) for convenience. These are provided as examples and do not limit the present technology. It is noted that any of the dependent examples may be combined in any combination, and placed into a respective independent example. The other examples can be presented in a similar manner.

Example 1: A method to be performed by a device including a network interface, one or more microphones, one or more processors, at least one speaker, and data storage having stored therein instructions executable by the one or more processors. The method includes monitoring, via one or more keyword engines, an input sound-data stream representing sound detected by the one or more microphones for (i) a wake word associated with a voice assistant service and (ii) one or more keywords, wherein the

one or more keywords are different than the wake word; generating a first wake-word detection event corresponding to a first voice input when the one or more keyword engines detect sound data matching the wake word in the input sound-data stream; based on generating the first wake-word detection event, causing the voice assistant service to process the first voice input; generating a first keyword detection event corresponding to a second voice input when the one or more keyword engines detect sound data matching at least one first keyword of the one or more keywords, determining that the second voice input matches a particular predetermined speaker profile of one or more predetermined speaker profiles, and based on (i) generating the first keyword detection event and (ii) determining that the second voice input includes sound data matching the particular predetermined speaker profile, performing a particular playback command associated with the at least one first keyword.

Example 2: The method of Example 1, wherein the method further comprises: generating a second keyword detection event corresponding to a third voice input when the one or more keyword engines detect sound data matching at least one second keyword of the one or more keywords; determining that the third voice input does not match any of the one or more predetermined speaker profiles; and based on (i) generating the second keyword detection event and (ii) determining that the third voice input does not match any of the one or more predetermined speaker profiles, foregoing processing of the third voice input.

Example 3: The method of any of Examples 1 and 2, wherein the method further comprises: generating a second wake-word detection event corresponding to a fourth voice input when the one or more keyword engines detect both (i) sound data matching the wake word in the input sound-data stream and (ii) sound data matching at least one keyword of the one or more keywords; and based on generating the second wake-word detection event, causing the voice assistant service to process the fourth voice input.

Example 4: The method of any of Examples 1-3, wherein the one or more keyword engines comprise a wake word engine and a local keyword engine, and wherein monitoring the input sound-data stream via the one or more keyword engines comprises: monitoring, via the wake word engine, the input sound-data stream for the wake word associated with a voice assistant service; and monitoring, via the local keyword engine, the input sound-data stream for the one or more keywords.

Example 5: The method of any of Examples 1-4, wherein the method further comprises: receiving data representing a command to associate the at least one first keyword of the one or more keywords with the particular predetermined speaker profile; and based on receiving the data representing the command, storing, in the data storage, an association between the at least one first keyword and the particular predetermined speaker profile, wherein performing the particular playback command associated with the at least one first keyword is further based on determining that there is a stored association between the at least one first keyword and the particular predetermined speaker profile.

Example 6: The method of any of Examples 1-5, wherein the method further comprises: monitoring, via a speaker detection engine, the input sound-data stream for voice data that match the one or more predetermined speaker profiles, and wherein determining that the second voice input matches the particular predetermined speaker profile comprises determining, via a speaker detection engine, that a portion of the input sound-data stream corresponding to the second voice input includes particular voice data matching the particular predetermined speaker profile.

Example 7: The method of Examples 6, wherein monitoring, via the speaker detection engine, the input sound-data stream for voice data that matches the one or more predetermined speaker profiles comprises monitoring the input sound-data stream for voice data concurrently with monitoring the input sound-data stream for the one or more keywords.

Example 8: The method of any of Examples 1-7, wherein the method further comprises: based on determining that the second voice input matches the particular predetermined speaker profile, updating at least one of the one or more keyword engines with parameters corresponding to the particular predetermined speaker profile.

Example 8: The method of any of Examples 1-7, wherein the method further comprises: detecting, via a neural network, presence of sound data representing one or more keywords corresponding to the particular playback command in the second voice input, wherein the one or more keywords comprise the at least one first keyword.

Example 10: The method of Example 9, wherein the method further comprises: receiving string data representing one or more custom keywords corresponding to the particular predetermined speaker profile; and training the neural network to detect the one or more custom keywords based on the string data.

Example 11: A tangible, non-transitory, computer-readable medium having instructions stored thereon that are executable by one or more processors to cause a playback device to perform the method of any one of Examples 1-10.

Example 12: A playback device comprising at least one speaker, a network interface, one or more microphones, one or more processors, and a data storage having instructions stored thereon that are executable by the one or more processors to cause the playback device to perform the method of any of Examples 1-10.

Example 13: A method to be performed by a device including a network interface, one or more microphones, one or more processors, at least one speaker, and data storage having stored therein instructions executable by the one or more processors. The method includes monitoring, via one or more keyword engines, an input sound-data stream representing sound detected by the one or more microphones for one or more keywords from a keyword library, wherein the keyword library comprises pre-defined keywords and user-defined keywords; generating a first keyword detection event corresponding to a first voice input when the one or more keyword engines detect sound data matching a first keyword from the keyword library in the input sound-data stream; performing automatic speech recognition on the first voice input to detect keywords from the keyword library in the first voice input, wherein performing automatic speech recognition on the first voice input comprises: (i) detecting one or more pre-defined keywords from the keyword library in the first voice input; (ii) detecting a first user-defined keyword in the first voice input; and (iii) determining a confidence metric indicating confidence in recognizing keywords from the keyword library in the first voice input; and based on detecting the one or more pre-defined keywords in combination with the first user-defined keyword, modifying the confidence metric to indicate increased confidence in detecting keywords from the keyword library in the first voice input.

Example 14: The method of Example 13, wherein the method further comprises: determining that the modified confidence metric exceeds a confidence threshold; and based

on (i) generating the first keyword detection event and (ii) determining that the modified confidence metric exceeds the confidence threshold, performing a particular playback command corresponding to the detected keywords in the first voice input.

Example 15: The method of any of Examples 13 and 14, wherein determining the confidence metric indicating confidence in recognizing keywords from the keyword library in the first voice input comprises: determining a first sub-metric indicating confidence in recognizing the particular user-defined keyword in the first voice input; determining one or more second sub-metrics indicating confidence in recognizing the one or more pre-loaded keywords from the keyword library in the first voice input, wherein the one or more second sub-metrics indicate higher confidence than the first sub-metric; and determining the confidence metric based on the first sub-metric and the one or more second sub-metrics.

Example 16: The method of Example 15, wherein modifying the confidence metric to indicate increased confidence in detecting keywords from the keyword library in the first voice input comprises: based on detecting the one or more pre-loaded keywords from the keyword library in the first voice input, modifying the first sub-metric to indicate increased confidence in recognizing the particular user-defined keyword in the first voice input.

Example 17: The method of any of Examples 13-16, wherein the method further comprises: generating a second keyword detection event corresponding to a second voice input when the one or more keyword engines detect sound data matching a second keyword from the keyword library in the input sound-data stream; performing automatic speech recognition on the second voice input to detect keywords from the keyword library in the second voice input, wherein performing automatic speech recognition on the second voice input comprises: (i) detecting a second user-defined keyword in the second voice input; and (ii) determining a confidence metric indicating confidence in recognizing keywords from the keyword library in the second voice input; and based on not detecting pre-defined keywords from the keyword library in the second voice input, foregoing modifying the confidence metric to indicate increased confidence in detecting keywords from the keyword library in the second voice input.

Example 18: The method of Example 17, wherein the method further comprises: determining that the confidence metric indicating confidence in recognizing keywords from the keyword library in the second voice input does not meet a confidence threshold; and based on (i) generating the second keyword detection event and (ii) determining that the confidence metric indicating confidence in recognizing keywords from the keyword library in the second voice input does not meet a confidence threshold, foregoing performing a particular playback command corresponding to the detected keywords in the second voice input.

Example 19: The method of any of Examples 13-18, wherein performing automatic speech recognition on the first voice input to detect keywords from the keyword library in the first voice input comprises: detecting, via a neural network, presence of sound data representing the user-defined keyword in a first portion of the first voice input; and detecting, via the neural network, presence of sound data representing the user-defined keyword in respective second portions of the first voice input, wherein the neural network was trained to detect the pre-defined keywords of the keyword library with additional sound data compared with the user-defined keywords of the keyword library.

Example 20: The method of any of Examples 13-19, 20, wherein the method further comprises: receiving string data representing one or more additional user-defined keywords; and training the neural network to detect the one or more additional user-defined keywords based on the string data.

Example 21: The method of any of Examples 13-20, wherein at least a portion of the pre-defined keywords correspond to respective playback commands, and wherein at least a portion of the user-defined keywords correspond to user-defined device names.

Example 22: A tangible, non-transitory, computer-readable medium having instructions stored thereon that are executable by one or more processors to cause a playback device to perform the method of any one of Examples 13-20.

Example 23: A playback device comprising at least one speaker, a network interface, one or more microphones, one or more processors, and a data storage having instructions stored thereon that are executable by the one or more processors to cause the playback device to perform the method of any of Examples 13-20.

We claim:

1. A playback device comprising:

a network interface;

one or more microphones;

at least one speaker;

one or more processors;

a housing carrying the network interface, the one or more microphones, the at least one speaker, and the one or more processors; and

data storage having instructions stored thereon that are executable by the one or more processors to cause the playback device to perform functions comprising:

monitoring, via one or more keyword engines, an input sound-data stream representing sound detected by the one or more microphones for (i) a wake word associated with a cloud-based voice assistant service implemented via one or more servers that are remote from the playback device and (ii) one or more keywords associated with a local voice assistant implemented on the playback device, wherein the one or more keywords are different than the wake word, wherein detections of sound data matching the wake word trigger generation of wake-word detection events that cause processing via the cloud-based voice assistant service, and wherein detections of sound data matching the one or more keywords trigger generation of wake-word detection events that cause processing via the local voice assistant;

generating a first wake-word detection event corresponding to a first voice input when the one or more keyword engines detect first sound data matching the wake word in the input sound-data stream;

based on generating the first wake-word detection event, causing, via the network interface, the cloud-based voice assistant service to process the first voice input;

generating a first keyword detection event corresponding to a second voice input when the one or more keyword engines detect sound data matching at least one first keyword of the one or more keywords;

determining that the second voice input matches a particular predetermined speaker profile of one or more predetermined speaker profiles such that a particular speaker of the second voice input is recognized;

based on (i) generating the first keyword detection event and (ii) determining that the second voice input includes sound data matching the particular predetermined speaker profile, processing the second voice

input via the local voice assistant, wherein processing the second voice input via the local voice assistant comprises determining a particular playback command associated with the at least one first keyword;

performing the particular playback command associated with the at least one first keyword;

generating a second keyword detection event corresponding to a third voice input when the one or more keyword engines detect sound data matching at least one second keyword of the one or more keywords;

determining that the third voice input does not match any of the one or more predetermined speaker profiles such that a speaker for the third voice input cannot be recognized; and

based on (i) generating the second keyword detection event and (ii) determining that the third voice input does not match any of the one or more predetermined speaker profiles, forgoing processing of the third voice input via either the local voice assistant or the cloud-based voice assistant.

2. The playback device of claim **1**, wherein the functions further comprise:

generating a second wake-word detection event corresponding to a fourth voice input when the one or more keyword engines detect both (i) sound data matching the wake word in the input sound-data stream and (ii) sound data matching at least one keyword of the one or more keywords; and

based on generating the second wake-word detection event, causing the cloud-based voice assistant service to process the fourth voice input.

3. The playback device of claim **1**, wherein the one or more keyword engines comprise a wake word engine and a local keyword engine, and wherein monitoring the input sound-data stream via the one or more keyword engines comprises:

monitoring, via the wake word engine, the input sound-data stream for the wake word associated with the cloud-based voice assistant service; and

monitoring, via the local keyword engine, the input sound-data stream for the one or more keywords.

4. The playback device of claim **1**, wherein the functions further comprise:

receiving data representing a command to associate the at least one first keyword of the one or more keywords with the particular predetermined speaker profile; and

based on receiving the data representing the command, storing, in the data storage, an association between the at least one first keyword and the particular predetermined speaker profile, wherein performing the particular playback command associated with the at least one first keyword is further based on determining that there is a stored association between the at least one first keyword and the particular predetermined speaker profile.

5. The playback device of claim **1**, wherein the functions further comprise:

monitoring, via a speaker detection engine, the input sound-data stream for voice data that match the one or more predetermined speaker profiles, and wherein determining that the second voice input matches the particular predetermined speaker profile comprises determining, via the speaker detection engine, that a portion of the input sound-data stream corresponding to the second voice input includes particular voice data matching the particular predetermined speaker profile.

6. The playback device of claim **5**, wherein monitoring, via the speaker detection engine, the input sound-data stream for voice data that matches the one or more predetermined speaker profiles comprises monitoring the input sound-data stream for voice data concurrently with monitoring the input sound-data stream for the one or more keywords.

7. The playback device of claim **1**, wherein the functions further comprise:

based on determining that the second voice input matches the particular predetermined speaker profile, updating at least one of the one or more keyword engines with parameters corresponding to the particular predetermined speaker profile.

8. The playback device of claim **1**, wherein the functions further comprise:

detecting, via a neural network, presence of sound data representing one or more keywords corresponding to the particular playback command in the second voice input, wherein the one or more keywords comprise the at least one first keyword.

9. The playback device of claim **8**, wherein the functions further comprise:

receiving string data representing one or more custom keywords corresponding to the particular predetermined speaker profile; and

training the neural network to detect the one or more custom keywords based on the string data.

10. A method to be performed by a playback device, the method comprising:

monitoring, via one or more keyword engines, an input sound-data stream representing sound detected by one or more microphones for (i) a wake word associated with a cloud-based voice assistant service implemented via one or more servers that are remote from the playback device and (ii) one or more keywords associated with a local voice assistant implemented on the playback device, wherein the one or more keywords are different than the wake word, wherein detections of sound data matching the wake word trigger generation of wake-word detection events that cause processing via the cloud-based voice assistant service, wherein detections of sound data matching the one or more keywords trigger generation of wake-word detection events that cause processing via local voice assistant, and wherein the playback device comprises a housing carrying a network interface, the one or more microphones, at least one speaker, and one or more processors;

generating a first wake-word detection event corresponding to a first voice input when the one or more keyword engines detect first sound data matching the wake word in the input sound-data stream;

based on generating the first wake-word detection event, causing, via the network interface, the cloud-based voice assistant service to process the first voice input;

generating a first keyword detection event corresponding to a second voice input when the one or more keyword engines detect sound data matching at least one first keyword of the one or more keywords;

determining that the second voice input matches a particular predetermined speaker profile of one or more predetermined speaker profiles such that a particular speaker of the second voice input is recognized;

based on (i) generating the first keyword detection event and (ii) determining that the second voice input includes sound data matching the particular predeter-

mined speaker profile, processing the second voice input via the local voice assistant, wherein processing the second voice input via the local voice assistant comprises determining a particular playback command associated with the at least one first keyword;

generating a second keyword detection event corresponding to a third voice input when the one or more keyword engines detect sound data matching at least one second keyword of the one or more keywords;

determining that the third voice input does not match any of the one or more predetermined speaker profiles such that a speaker for the third voice input cannot be recognized; and

based on (i) generating the second keyword detection event and (ii) determining that the third voice input does not match any of the one or more predetermined speaker profiles, forgoing processing of the third voice input via either the local voice assistant or the cloud-based voice assistant.

11. The method of claim **10**, further comprising:

generating a second wake-word detection event corresponding to a fourth voice input when the one or more keyword engines detect both (i) sound data matching the wake word in the input sound-data stream and (ii) sound data matching at least one keyword of the one or more keywords; and

based on generating the second wake-word detection event, causing the voice assistant service to process the fourth voice input.

12. The method of claim **10**, wherein the one or more keyword engines comprise a wake word engine and a local keyword engine, and wherein monitoring the input sound-data stream via the one or more keyword engines comprises:

monitoring, via the wake word engine, the input sound-data stream for the wake word associated with the voice assistant service; and

monitoring, via the local keyword engine, the input sound-data stream for the one or more keywords.

13. The method of claim **10**, further comprising:

receiving data representing a command to associate the at least one first keyword of the one or more keywords with the particular predetermined speaker profile; and

based on receiving the data representing the command, storing, in data storage, an association between the at least one first keyword and the particular predetermined speaker profile, wherein performing the particular playback command associated with the at least one first keyword is further based on determining that there is a stored association between the at least one first keyword and the particular predetermined speaker profile.

14. The method of claim **10**, further comprising:

monitoring, via a speaker detection engine, the input sound-data stream for voice data that match the one or more predetermined speaker profiles, and wherein determining that the second voice input matches the particular predetermined speaker profile comprises determining, via the speaker detection engine, that a portion of the input sound-data stream corresponding to the second voice input includes particular voice data matching the particular predetermined speaker profile.

15. The method of claim **14**, wherein monitoring, via the speaker detection engine, the input sound-data stream for voice data that matches the one or more predetermined speaker profiles comprises monitoring the input sound-data stream for voice data concurrently with monitoring the input sound-data stream for the one or more keywords.

16. The method of claim **10**, further comprising:

based on determining that the second voice input matches the particular predetermined speaker profile, updating at least one of the one or more keyword engines with parameters corresponding to the particular predetermined speaker profile.

17. The method of claim **10**, further comprising:

detecting, via a neural network, presence of sound data representing one or more keywords corresponding to the particular playback command in the second voice input, wherein the one or more keywords comprise the at least one first keyword;

receiving string data representing one or more custom keywords corresponding to the particular predetermined speaker profile; and

training the neural network to detect the one or more custom keywords based on the string data.

18. A tangible, non-transitory, computer-readable medium storing instructions that, when executed by one or more processors, cause a playback device to perform functions comprising:

monitoring, via one or more keyword engines, an input sound-data stream representing sound detected by one or more microphones for (i) a wake word associated with a cloud-based voice assistant service implemented via one or more servers that are remote from the playback device and (ii) one or more keywords associated with a local voice assistant implemented on the playback device, wherein the one or more keywords are different than the wake word, wherein detections of sound data matching the wake word trigger generation of wake-word detection events that cause processing via the cloud-based voice assistant service, wherein detections of sound data matching the one or more keywords trigger generation of wake-word detection events that cause processing via local voice assistant, and wherein the playback device comprises a housing carrying a network interface, the one or more microphones, at least one speaker, and the one or more processors;

monitoring, via one or more keyword engines, an input sound-data stream representing sound detected by one or more microphones for (i) a wake word associated with a voice assistant service and (ii) one or more keywords, wherein the one or more keywords are different than the wake word;

generating a first wake-word detection event corresponding to a first voice input when the one or more keyword engines detect first sound data matching the wake word in the input sound-data stream;

based on generating the first wake-word detection event, causing, via the network interface, the cloud-based voice assistant service to process the first voice input;

generating a first keyword detection event corresponding to a second voice input when the one or more keyword engines detect sound data matching at least one first keyword of the one or more keywords;

determining that the second voice input matches a particular predetermined speaker profile of one or more predetermined speaker profiles such that a particular speaker of the second voice input is recognized;

based on (i) generating the first keyword detection event and (ii) determining that the second voice input includes sound data matching the particular predetermined speaker profile, processing the second voice input via the local voice assistant, wherein processing the second voice input via the local voice assistant

comprises determining a particular playback command associated with the at least one first keyword;

generating a second keyword detection event corresponding to a third voice input when the one or more keyword engines detect sound data matching at least one second keyword of the one or more keywords;

determining that the third voice input does not match any of the one or more predetermined speaker profiles such that a speaker for the third voice input cannot be recognized; and

based on (i) generating the second keyword detection event and (ii) determining that the third voice input does not match any of the one or more predetermined speaker profiles, forgoing processing of the third voice input via either the local voice assistant or the cloud-based voice assistant.

19. The tangible, non-transitory, computer-readable medium of claim **18**, wherein the functions further comprise:

generating a second wake-word detection event corresponding to a fourth voice input when the one or more keyword engines detect both (i) sound data matching the wake word in the input sound-data stream and (ii) sound data matching at least one keyword of the one or more keywords; and

based on generating the second wake-word detection event, causing the voice assistant service to process the fourth voice input.

20. The tangible, non-transitory, computer-readable medium of claim **18**, wherein the one or more keyword engines comprise a wake word engine and a local keyword engine, and wherein monitoring the input sound-data stream via the one or more keyword engines comprises:

monitoring, via the wake word engine, the input sound-data stream for the wake word associated with a voice assistant service; and

monitoring, via the local keyword engine, the input sound-data stream for the one or more keywords.

* * * * *