US 20250256650A1

(19) **United States**

(12) **Patent Application Publication** (10) **Pub. No.: US 2025/0256650 A1**

Miu et al. (43) **Pub. Date: Aug. 14, 2025**

(54) **CAMERA PASSIVE GLARE AND NATURAL LIGHT BACKSCATTER REDUCTION**

(71) Applicant: **Magna Electronics Inc.**, Auburn Hills, MI (US)

(72) Inventors: **Traian Miu**, Oakville (CA); **Gabriele W. Sabatini**, Keswick (CA)

(21) Appl. No.: **19/050,172**

(22) Filed: **Feb. 11, 2025**

Related U.S. Application Data

(60) Provisional application No. 63/552,426, filed on Feb. 12, 2024.

Publication Classification

(51) **Int. Cl.**

B60R 1/22	(2022.01)
H04N 23/55	(2023.01)

(52) **U.S. Cl.**

CPC ***B60R 1/22*** (2022.01); ***H04N 23/55*** (2023.01); *B60R 2300/307* (2013.01)

(57) **ABSTRACT**

A vehicular camera includes first and second imaging sensors respectively capturing first and second image data. Light incident at the camera passes through an optical element to be incident at a polarizing beam splitter (PBS). With the camera disposed at a vehicle, circularly polarized light reflected from an object and backscattered natural light are incident at the camera. First and second portions of the backscattered light respectively have first and second orthogonal polarization states. The circularly polarized light passes through the optical element and is incident at the PBS as linearly polarized light having the first orthogonal polarization state. The PBS directs the linearly polarized light and the first portion of the backscattered light to the first imaging sensor and directs the second portion of the backscattered light to the second imaging sensor. A vehicular vision system detects an object based on processing of the first and second image data.

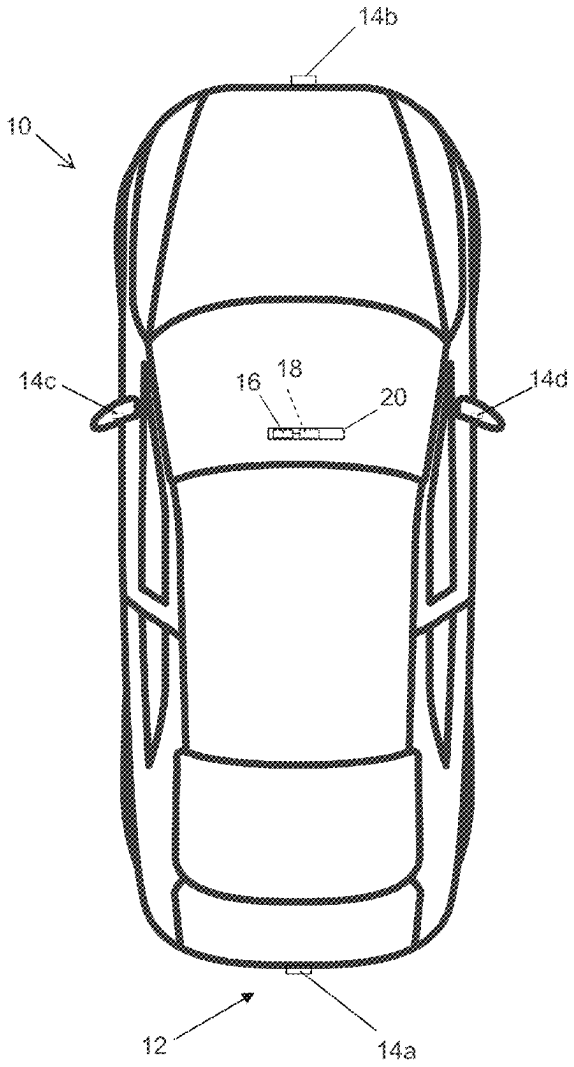

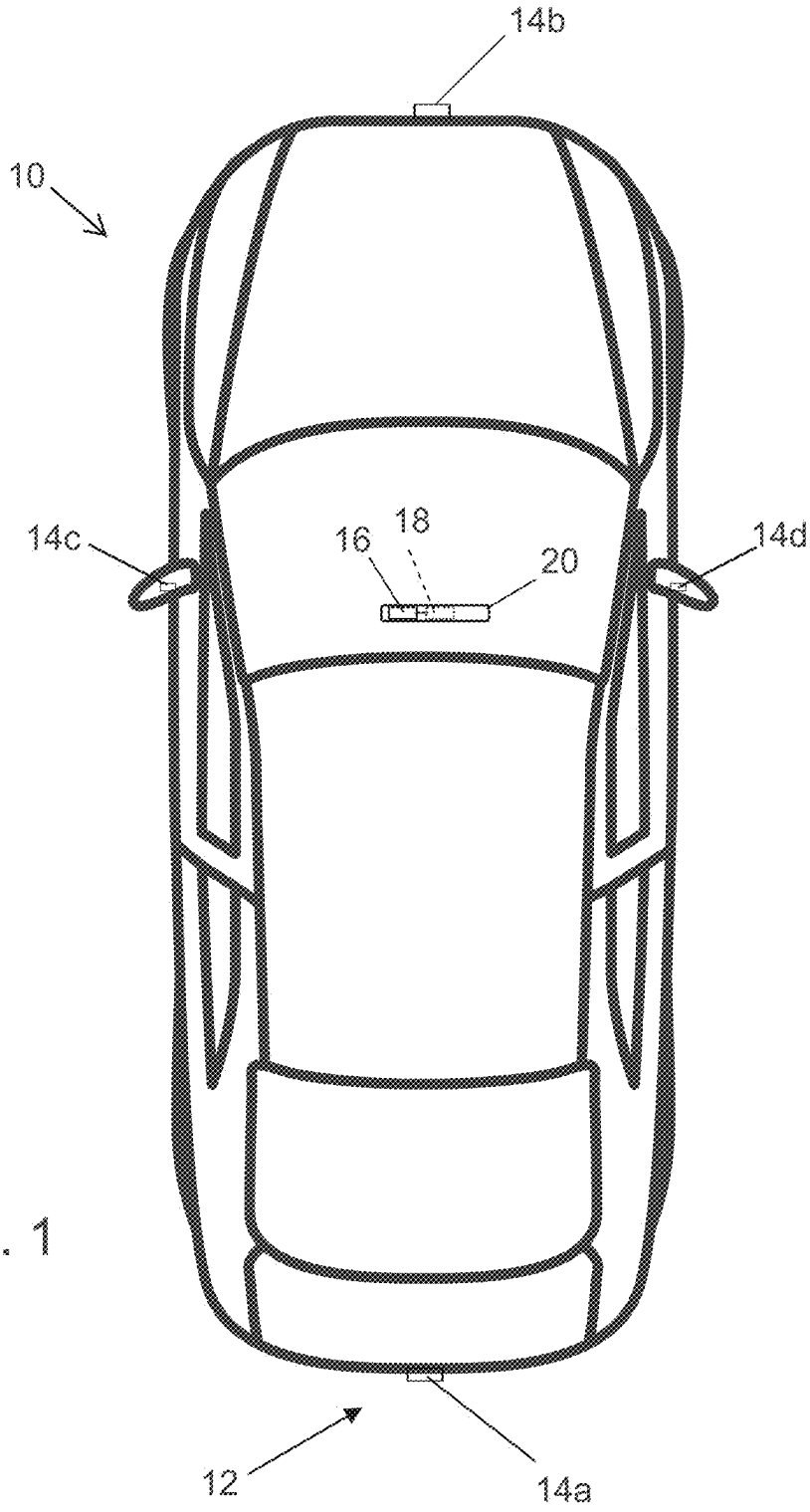

FIG. 1

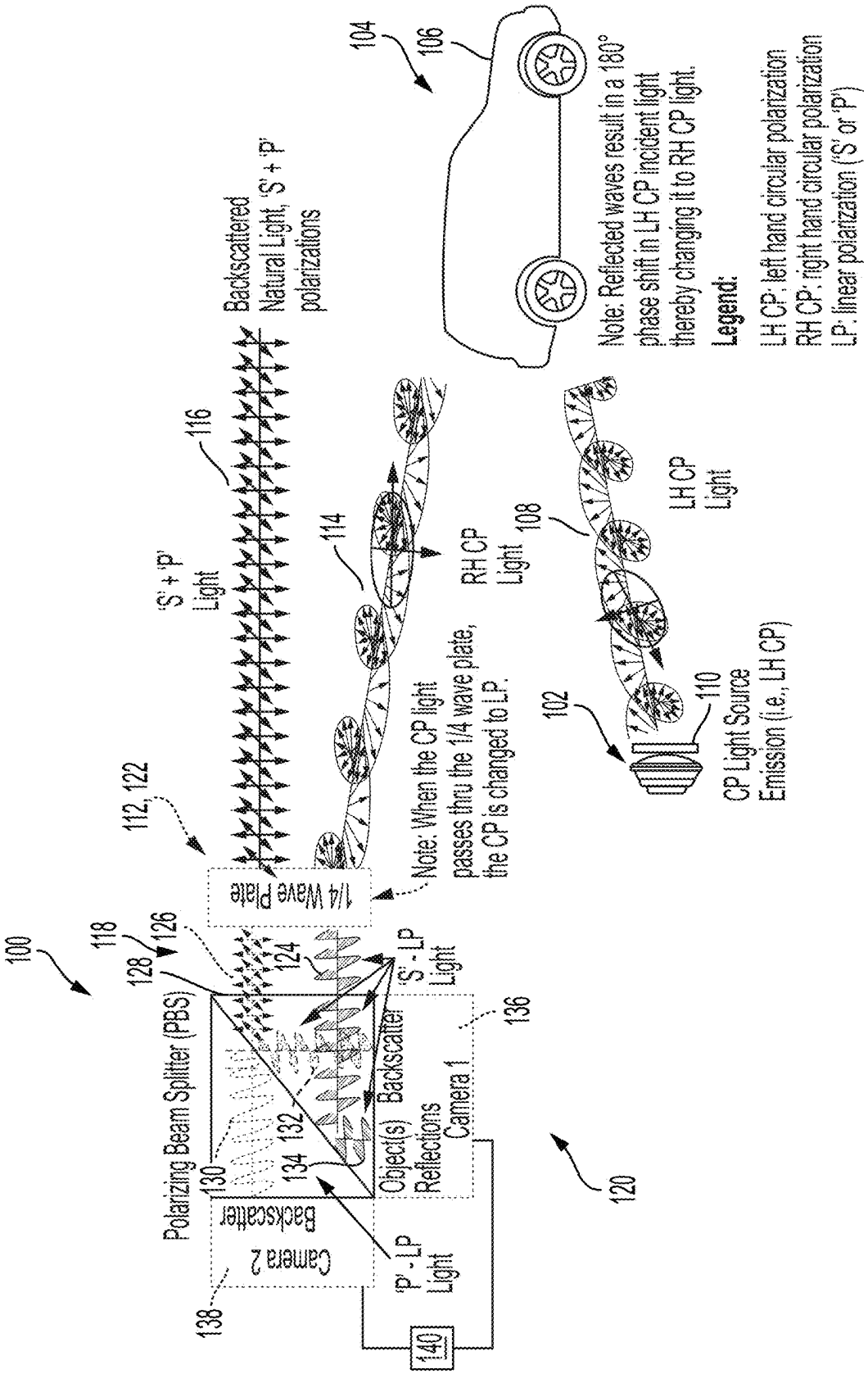
100
118
126
128
124
Polarizing Beam Splitter (PBS)
130
132
134
Backscatter
Camera 2
138
'P' - LP Light
Object(s) Reflections
Backscatter
Camera 1
136
'S' - LP Light
140
120
112, 122
1/4 Wave Plate
Note: When the CP light passes thru the 1/4 wave plate, the CP is changed to LP.
114
RH CP Light
116
'S' + 'P' Light
Backscattered Natural Light, 'S' + 'P' polarizations
102
110
CP Light Source Emission (i.e., LH CP)
108
LH CP Light
104
106
Note: Reflected waves result in a 180° phase shift in LH CP incident light thereby changing it to RH CP light.
Legend:
LH CP: left hand circular polarization
RH CP: right hand circular polarization
LP: linear polarization ('S' or 'P')

FIG. 2

CAMERA PASSIVE GLARE AND NATURAL LIGHT BACKSCATTER REDUCTION

CROSS REFERENCE TO RELATED APPLICATION

[0001] The present application claims the filing benefits of U.S. provisional application Ser. No. 63/552,426, filed Feb. 12, 2024, which is hereby incorporated herein by reference in its entirety.

FIELD OF THE INVENTION

[0002] The present disclosure relates generally to an imaging assembly and more specifically to an imaging assembly utilizing polarized light in a vehicle and a method of operating the imaging assembly.

BACKGROUND OF THE INVENTION

[0003] Use of imaging sensors in vehicle imaging systems is common and known. Examples of such known systems are described in U.S. Pat. Nos. 5,949,331; 5,670,935 and/or 5,550,677, which are hereby incorporated herein by reference in their entireties.

SUMMARY OF THE INVENTION

[0004] It is an aspect of the present disclosure to provide an imaging assembly. The imaging assembly includes an optical device configured to receive transmitted light from at least one light source having a first polarization after reflecting from a scene as reflected light having a second polarization different than the first polarization along with backscattered natural light and output an altered light. The imaging assembly also includes a camera assembly configured to receive the altered light and capture imaging of the scene using the altered light. The imaging of the scene captured has a reduction in glare and the backscattered natural light.

[0005] For example, a vehicular camera assembly includes a first imaging sensor that is operable to capture first image data, a second imaging sensor that is operable to capture second image data, a polarizing beam splitter (PBS), and an optical element. Light incident at the vehicular camera assembly passes through the optical element to be incident at the PBS. The vehicular camera assembly is configured to be disposed at a vehicle equipped with a vehicular vision system. With the vehicular camera assembly disposed at the vehicle, and with a light source at the vehicle emitting circularly polarized light, (i) reflected circularly polarized light reflected from an object is incident at the vehicular camera assembly and (ii) backscattered natural light is incident at the vehicular camera assembly. A first portion of the backscattered natural light has a first orthogonal polarization state and a second portion of the backscattered natural light has a second orthogonal polarization state. The reflected circularly polarized light incident at the vehicular camera assembly passes through the optical element and is incident at the PBS as reflected linearly polarized light comprising the first orthogonal polarization state. The first portion and the second portion of the backscattered natural light pass through the optical element. The PBS (i) directs the reflected linearly polarized light and the first portion of the backscattered natural light to the first imaging sensor capturing the first image data and (ii) directs the second portion of the backscattered natural light to the second imaging sensor capturing the second image data. The vehicular vision system detects an object based on processing of the first image data and the second image data.

[0006] These and other objects, advantages, purposes and features of the present invention will become apparent upon review of the following specification in conjunction with the drawings. The description and specific examples in this summary are intended for purpose of illustration only and are not intended to limit the scope of the present disclosure.

BRIEF DESCRIPTION OF THE DRAWINGS

[0007] FIG. **1** is a plan view of a vehicle with a vision system that incorporates cameras; and

[0008] FIG. **2** is a diagram showing an imaging assembly and illustrating light transmitted by a light source and reflected from an object in a scene and received by the imaging assembly along with backscattered natural light according to aspects of the disclosure.

DESCRIPTION OF THE PREFERRED EMBODIMENTS

[0009] Motor vehicles are increasingly being equipped with sensors and cameras that detect the environment and terrain surrounding the motor vehicle. For example, some vehicles include sensor assemblies that provide real-time data regarding the terrain and/or other objects in the vicinity of the vehicle. More specifically, camera or imaging assemblies have been used to detect the presence and position of objects near the motor vehicle while the vehicle is stationary or while the vehicle is moving. The imaging captured by these imaging assemblies can be used by various systems of the motor vehicle to provide safety features such as vehicle control, collision avoidance, and parking assistance and can, for example, assist the driver while driving the vehicle and/or to intervene in controlling the vehicle.

[0010] Such imaging can work well in many environmental conditions; however, perception issues can occur when the vehicle travels in inclement environments. For example, glare and natural light backscatter can adversely affect the imaging. Thus, the recognition and/or differentiation of objects in the imaging may be more challenging.

[0011] Thus, there is an increasing need for improved imaging assemblies capable of operating in adverse weather, for example.

[0012] A vehicle vision system and/or driver or driving assist system and/or object detection system and/or alert system operates to capture images exterior of the vehicle and may process the captured image data to display images and to detect objects at or near the vehicle and in the predicted path of the vehicle, such as to assist a driver of the vehicle in maneuvering the vehicle in a rearward direction. The vision system includes an image processor or image processing system that is operable to receive image data from one or more cameras and provide an output to a display device for displaying images representative of the captured image data. Optionally, the vision system may provide display, such as a rearview display or a top down or bird's eye or surround view display or the like.

[0013] Referring now to the drawings and the illustrative embodiments depicted therein, a vehicle **10** includes an imaging system or vision system **12** that includes at least one exterior viewing imaging sensor or camera, such as a rear backup camera or rearward viewing imaging sensor or

camera **14***a* (and the system may optionally include multiple exterior viewing imaging sensors or cameras, such as a forward viewing camera **14***b* at the front (or at the windshield) of the vehicle, and a sideward/rearward viewing camera **14***c*, **14***d* at respective sides of the vehicle), which captures images exterior of the vehicle, with the camera having a lens for focusing images at or onto an imaging array or imaging plane or imager of the camera (FIG. **1**). Optionally, a forward viewing camera may be disposed at the windshield of the vehicle and view through the windshield and forward of the vehicle, such as for a machine vision system (such as for traffic sign recognition, headlamp control, pedestrian detection, collision avoidance, lane marker detection and/or the like). The vision system **12** includes a control or electronic control unit (ECU) **18** having electronic circuitry and associated software, with the electronic circuitry including a data processor or image processor that is operable to process image data captured by the camera or cameras, whereby the ECU may detect or determine presence of objects or the like and/or the system provide displayed images at a display device **16** for viewing by the driver of the vehicle (although shown in FIG. **1** as being part of or incorporated in or at an interior rearview mirror assembly **20** of the vehicle, the control and/or the display device may be disposed elsewhere at or in the vehicle). The data transfer or signal communication from the camera to the ECU may comprise any suitable data or communication link, such as a vehicle network bus or the like of the equipped vehicle.

[0014] FIG. **2** is a diagram showing an imaging assembly **100**. For example, one or more of the cameras at the vehicle **10** may include the imaging assembly **100**, or the imaging assembly **100** may be remote from the vehicular cameras. The imaging assembly **100** captures image data that is processed at the ECU **18** by the vehicular vision system **12**. As shown, at least one light source **102** or circularly polarized light source illuminates a scene **104** with an object **106** (e.g., a vehicle) present therein with transmitted light **108** having a first polarization (e.g., left hand circularly polarized). For example, the at least one light source **102** may include a polarizer **110**. The imaging assembly **100** includes an optical device **112** configured to receive transmitted light **108** from the at least one light source **102** after reflecting from the scene **104** as reflected light **114** having a second polarization (e.g., right hand circularly polarized) different than the first polarization. The reflection of the transmitted light **108** of the at least one light source **102** having the first polarization from the scene **104** results in a 180-degree phase shift to change its polarization (e.g., from left hand circularly polarized to right hand circularly polarized). The optical device **112** is also configured to receive backscattered natural light **116** (e.g., with a first orthogonal polarization state S and a second orthogonal polarization state P, i.e., having a random polarization). The optical device **112** outputs an altered light **118** based on the received light **114**, **116**. The imaging assembly **100** also includes a camera assembly **120** configured to receive the altered light **118** and capture image data representative of the scene **104** using the altered light **118**. The altered light used in imaging the scene **104** has a reduction in glare and reduced backscattered natural light **116**.

[0015] According to aspects of the disclosure, the optical device **112** includes a quarter-wave plate **122** configured to change the reflected light **114** from the second polarization to a scene reflection light **124** being linearly polarized with a first orthogonal linear polarization state (i.e., S linearly polarized light) and to output or emit or transmit the backscattered natural light **116** as transmitted natural light **126**. Thus, when the circularly polarized light (i.e., reflected light **114**) passes through the quarter-wave plate **122**, it becomes linearly polarized. In addition, the camera assembly **120** may include a polarizing beam splitter **128** configured to receive the transmitted natural light **126** and to pass through or transmit a transmitted backscatter light **130** being linearly polarized with a second orthogonal linear polarization state (i.e., P linearly polarized light) different than the first orthogonal linear polarization state and to reflect a reflected backscatter light **132** being linearly polarized with the first orthogonal linear polarization state. The polarizing beam splitter **128** may be configured to receive the scene reflection light **124** and to reflect a reflected scene light **134** being linearly polarized with the first orthogonal linear polarization state while preventing transmission of the scene reflection light **124** therethrough. Specifically, the reflected backscatter light **132** and the transmitted backscatter light **130** may each comprise approximately fifty percent of the transmitted natural light **126** transmitted through the quarter-wave plate **122**.

[0016] The camera assembly **120** may additionally include a first camera **136** configured to receive the reflected scene light **134** and the reflected backscatter light **132** and to capture a first imaging of the scene **104** including the reflected scene light **134** and the reflected backscatter light **132**. The first camera **136** collects approximately one hundred percent of the object reflections or reflected light **114** having the second polarization from the at least one light source **102** and collects approximately fifty percent of the backscattered natural light **116**. In addition, the camera assembly **120** may include a second camera **138** configured to receive the transmitted backscatter light **130** and to capture a second imaging of the scene **104** including only the transmitted backscatter light **130**. Thus, the second camera **138** collects approximately fifty percent of the backscattered natural light **116** while the object reflections are purposely blocked through polarization. Furthermore, the first imaging of the first camera **136** and the second imaging of the second camera **138** may be aligned on a pixel-by-pixel basis. In other words, the first camera **136** and the second camera **138** may produce equivalent images (pixel value alignment) for backscattered natural light **116** and this may be adjusted and compensated, if necessary.

[0017] The backscattered natural light **116** may be split into both the first camera **136** and the second camera **138** and thus cancelled using image processing (subtraction of images from each camera) to leave only the light reflected off of the object **106**. Therefore, according to further aspects of the disclosure, the imaging assembly **100** also includes an image processor **140** configured to subtract the second imaging captured by the second camera **138** from the first imaging captured by the first camera **136** to determine a remaining imaging. Thus, a pixel-by-pixel subtraction of the imaging of the second camera **138** is done from the imaging of the first camera **136**. Imaging from the first camera **136** and the second camera **138** can be more readily processed compared to radar signals, for example, and this solution reduces the glare/noise that can deteriorate the imaging required for processing to recognize objects **106** in the scene **104**. Accordingly, the remaining imaging has a reduction in

glare and reduced backscattered natural light **116**, thereby more acutely elucidating reflections of the object **106** from the at least one light source **102** alone, which may assist vision perception algorithms in more easily recognizing/distinguishing objects **106** in imaged scenes **104**. Thus, the imaging in adverse weather, for example, is improved.

[0018] In other words, the vehicular vision system **12** of the vehicle **10** may include the camera module or imaging assembly **100** having a first imager or imaging device **136** and a second imager or imaging device **138**. The vehicle **10** includes the light source **102** (e.g., a headlamp of the vehicle) that emits circularly polarized light **108** (e.g., lefthand circularly polarized light) so that objects **106** in the field of illumination of the light source **102** may reflect oppositely circularly polarized light **114** (e.g., righthand circularly polarized light). For example, the light source **102** may emit light that passes through the polarizer **110** so that circularly polarized light **108** is emitted toward the objects **106**. This circularly polarized light **114** may reflect from the object **106** within the environment to be imaged by the camera module **100**. Further, backscattered natural light **116** having random polarization (e.g., with a first orthogonal polarization state S and a second orthogonal polarization state P) may be imaged by the camera module **100**.

[0019] The camera module **100** includes the optical element or device **112** (e.g., a lens barrel or lens element of the camera module) and the reflected circularly polarized light **114** and the backscattered natural light **116** pass through the optical device **112**. The optical device **112** may transmit the circularly polarized light **114** as linearly polarized light **124** in a first linear polarization state (e.g., S linearly polarized light) and the optical device **112** may transmit the backscattered natural light **116** in its linearly polarized states (e.g., S and P linearly polarized light). In other words, the optical device **112**, which may include a quarter-wave plate, converts the reflected circularly polarized light **114** into linearly polarized light **124**.

[0020] The polarizing beam splitter **128** is disposed between the optical device **112** and the imagers of the camera module **100**, with the polarizing beam splitter **128** splitting and directing light that passes through the optical device **112** to the first imager **136** and the second imager **138**. Specifically, the polarizing beam splitter **128** reflects or directs or transmits S linearly polarized light to the first imager **136** and reflects or directs or transmits P linearly polarized light to the second imager **138**. Thus, the S linearly polarized light **134** reflected from the object **106** and the S linearly polarized light **132** from the background natural light **116** are directed to the first imager **136** and the P linearly polarized light **130** from the background natural light **116** is directed to the second imager **138**.

[0021] Because the S linearly polarized light and the P linearly polarized light may represent substantially similar portions of the environment when imaged by the first imager **136** and the second imager **138** of the camera module **100** (e.g., aligned pixel-by-pixel), the portion of the image data captured by the first imager **136** that corresponds to the image data captured by the second imager **138** may be digitally removed or ignored or weighted during further processing. The portion of the image data captured by the first imager **136** may be representative of the object **106** that reflected the circularly polarized light **114**. Thus, the object **106** may be more easily isolated in the image data, such as for object detection and identification/classification. For example, the vehicular vision system may rely on the image data captured by the first imager **136** to a greater degree than the image data captured by the second imager **138** during object detection. The camera module **100** includes the image processor **140**, which may process the image data to isolate the object **106** in the captured images and transmit the processed image data to the ECU **18** of the vehicle **10** for further processing.

[0022] In some examples, image data captured by the camera module **100** may be processed to generate video images displayed at the display device **16** of the vehicle **10**. For example, the image data captured by the first imager **136** and the second imager **138** may be processed to isolate the detected object **106** in the displayed video images, that is to display the detected object **106** in the video images and not display background objects or enhance the visibility of the detected object **106** relative to the background objects, such as by displaying a graphic overlay at the detected object and the like.

[0023] The camera or sensor may comprise any suitable camera or sensor. Optionally, the camera may comprise a "smart camera" that includes the imaging sensor array and associated circuitry and image processing circuitry and electrical connectors and the like as part of a camera module, such as by utilizing aspects of the vision systems described in U.S. Pat. Nos. 10,099,614 and/or 10,071,687, which are hereby incorporated herein by reference in their entireties.

[0024] The system includes an image processor operable to process image data captured by the camera or cameras, such as for detecting objects or other vehicles or pedestrians or the like in the field of view of one or more of the cameras. For example, the image processor may comprise an image processing chip selected from the EYEQ family of image processing chips available from Mobileye Vision Technologies Ltd. of Jerusalem, Israel, and may include object detection software (such as the types described in U.S. Pat. Nos. 7,855,755; 7,720,580 and/or 7,038,577, which are hereby incorporated herein by reference in their entireties), and may analyze image data to detect vehicles and/or other objects. Responsive to such image processing, and when an object or other vehicle is detected, the system may generate an alert to the driver of the vehicle and/or may generate an overlay at the displayed image to highlight or enhance display of the detected object or vehicle, in order to enhance the driver's awareness of the detected object or vehicle or hazardous condition during a driving maneuver of the equipped vehicle.

[0025] The vehicle may include any type of sensor or sensors, such as imaging sensors or radar sensors or lidar sensors or ultrasonic sensors or the like. The imaging sensor of the camera may capture image data for image processing and may comprise, for example, a two dimensional array of a plurality of photosensor elements arranged in at least 640 columns and 480 rows (at least a 640×480 imaging array, such as a megapixel imaging array or the like), with a lens focusing images onto the imaging array. The photosensor array may comprise a plurality of photosensor elements arranged in a photosensor array having rows and columns. The imaging array may comprise a CMOS imaging array having at least 300,000 photosensor elements or pixels, preferably at least 500,000 photosensor elements or pixels and more preferably at least one million photosensor elements or at least two million photosensor elements or pixels or at least three million photosensor elements or pixels or at

least five million photosensor elements or pixels arranged in rows and columns. The imaging array may be sensitive to near-infrared light. The imaging array may capture color image data, such as via spectral filtering at the array, such as via an RGB (red, green and blue) filter or via a red/red complement filter or such as via an RCC (red, clear, clear) filter or the like. The logic and control circuit of the imaging sensor may function in any known manner, and the image processing and algorithmic processing may comprise any suitable means for processing the images and/or image data.

[0026] For example, the vision system and/or processing and/or camera and/or circuitry may utilize aspects described in U.S. Pat. Nos. 9,233,641; 9,146,898; 9,174,574; 9,090,234; 9,077,098; 8,818,042; 8,886,401; 9,077,962; 9,068,390; 9,140,789; 9,092,986; 9,205,776; 8,917,169; 8,694,224; 7,005,974; 5,760,962; 5,877,897; 5,796,094; 5,949,331; 6,222,447; 6,302,545; 6,396,397; 6,498,620; 6,523,964; 6,611,202; 6,201,642; 6,690,268; 6,717,610; 6,757,109; 6,802,617; 6,806,452; 6,822,563; 6,891,563; 6,946,978; 7,859,565; 5,550,677; 5,670,935; 6,636,258; 7,145,519; 7,161,616; 7,230,640; 7,248,283; 7,295,229; 7,301,466; 7,592,928; 7,881,496; 7,720,580; 7,038,577; 6,882,287; 5,929,786 and/or 5,786,772, and/or U.S. Publication Nos. US-2014-0340510; US-2014-0313339; US-2014-0347486; US-2014-0320658; US-2014-0336876; US-2014-0307095; US-2014-0327774; US-2014-0327772; US-2014-0320636; US-2014-0293057; US-2014-0309884; US-2014-0226012; US-2014-0293042; US-2014-0218535; US-2014-0218535; US-2014-0247354; US-2014-0247355; US-2014-0247352; US-2014-0232869; US-2014-0211009; US-2014-0160276; US-2014-0168437; US-2014-0168415; US-2014-0160291; US-2014-0152825; US-2014-0139676; US-2014-0138140; US-2014-0104426; US-2014-0098229; US-2014-0085472; US-2014-0067206; US-2014-0049646; US-2014-0052340; US-2014-0025240; US-2014-0028852; US-2014-005907; US-2013-0314503; US-2013-0298866; US-2013-0222593; US-2013-0300869; US-2013-0278769; US-2013-0258077; US-2013-0258077; US-2013-0242099; US-2013-0215271; US-2013-0141578 and/or US-2013-0002873, which are all hereby incorporated herein by reference in their entireties. The system may communicate with other communication systems via any suitable means, such as by utilizing aspects of the systems described in U.S. Pat. Nos. 10,071,687; 9,900,490; 9,126,525 and/or 9,036,026, which are hereby incorporated herein by reference in their entireties.

[0027] The imaging device and control and image processor and any associated illumination source, if applicable, may comprise any suitable components, and may utilize aspects of the cameras (such as various imaging sensors or imaging array sensors or cameras or the like, such as a CMOS imaging array sensor, a CCD sensor or other sensors or the like) and vision systems described in U.S. Pat. Nos. 5,760,962; 5,715,093; 6,922,292; 6,757,109; 6,717,610; 6,590,719; 6,201,642; 5,796,094; 6,559,435; 6,831,261; 6,822,563; 6,946,978; 7,720,580; 8,542,451; 7,965,336; 7,480,149; 5,877,897; 6,498,620; 5,670,935; 5,796,094; 6,396,397; 6,806,452; 6,690,268; 7,005,974; 7,937,667; 7,123,168; 7,004,606; 6,946,978; 7,038,577; 6,353,392; 6,320,176; 6,313,454; 6,824,281; 11,165,975; 11,285,873; 11,613,209; 11,794,651 and/or 12,087,061, and/or U.S. Publication Nos. US 2010-0020170 and/or US-2009-0244361, which are all hereby incorporated herein by reference in their entireties.

[0028] Optionally, the camera may comprise a forward viewing camera, such as disposed at a windshield electronics module (WEM) or the like. The forward viewing camera may utilize aspects of the systems described in U.S. Pat. Nos. 12,174,448; 11,635,672; 11,124,130; 9,896,039; 9,871,971; 9,596,387; 9,487,159; 8,256,821; 7,480,149; 6,824,281 and/or 6,690,268, which are all hereby incorporated herein by reference in their entireties.

[0029] The camera module and circuit chip or board and imaging sensor may be implemented and operated in connection with various vehicular vision-based systems, and/or may be operable utilizing the principles of such other vehicular systems, such as a vehicle headlamp control system, such as the type disclosed in U.S. Pat. Nos. 5,796,094; 6,097,023; 6,320,176; 6,559,435; 6,831,261; 7,004,606; 7,339,149 and/or 7,526,103, which are all hereby incorporated herein by reference in their entireties, a vehicle vision system, such as a forward, sideward or rearward directed vehicle vision system utilizing principles disclosed in U.S. Pat. Nos. 5,550,677; 5,670,935; 5,760,962; 5,877,897; 5,949,331; 6,222,447; 6,302,545; 6,396,397; 6,498,620; 6,523,964; 6,611,202; 6,201,642; 6,690,268; 6,717,610; 6,757,109; 6,802,617; 6,806,452; 6,822,563; 6,891,563; 6,946,978 and/or 7,859,565, which are all hereby incorporated herein by reference in their entireties, a trailer hitching aid or tow check system, such as the type disclosed in U.S. Pat. No. 7,005,974, which is hereby incorporated herein by reference in its entirety, a reverse or sideward imaging system, such as for a lane change assistance system or lane departure warning system or for a blind spot or object detection system, such as imaging or detection systems of the types disclosed in U.S. Pat. Nos. 7,881,496; 7,720,580; 7,038,577; 5,929,786 and/or 5,786,772, which are hereby incorporated herein by reference in their entireties, a traffic sign recognition system, a system for determining a distance to a leading or trailing vehicle or object, such as a system utilizing the principles disclosed in U.S. Pat. Nos. 6,396,397 and/or 7,123,168, which are hereby incorporated herein by reference in their entireties, and/or the like.

[0030] The system may utilize sensors, such as radar sensors or imaging radar sensors or lidar sensors or the like, to detect presence of and/or range to objects and/or other vehicles and/or pedestrians. The sensing system may utilize aspects of the systems described in U.S. Pat. Nos. 10,866,306; 9,954,955; 9,869,762; 9,753,121; 9,689,967; 9,599,702; 9,575,160; 9,146,898; 9,036,026; 8,027,029; 8,013,780; 7,408,627; 7,405,812; 7,379,163; 7,379,100; 7,375,803; 7,352,454; 7,340,077; 7,321, 111; 7,310,431; 7,283,213; 7,212,663; 7,203,356; 7,176,438; 7,157,685; 7,053,357; 6,919,549; 6,906,793; 6,876,775; 6,710,770; 6,690,354; 6,678,039; 6,674,895 and/or 6,587,186, and/or U.S. Publication Nos. US-2019-0339382; US-2018-0231635; US-2018-0045812; US-2018-0015875; US-2017-0356994; US-2017-0315231; US-2017-0276788; US-2017-0254873; US-2017-0222311 and/or US-2010-0245066, which are hereby incorporated herein by reference in their entireties.

[0031] The ECU may be operable to process data for at least one driving assist system of the vehicle. For example, the ECU may be operable to process data (such as image data captured by a forward viewing camera of the vehicle that views forward of the vehicle through the windshield of the vehicle) for at least one selected from the group consisting of (i) a headlamp control system of the vehicle, (ii) a pedestrian detection system of the vehicle, (iii) a traffic

sign recognition system of the vehicle, (iv) a collision avoidance system of the vehicle, (v) an emergency braking system of the vehicle, (vi) a lane departure warning system of the vehicle, (vii) a lane keep assist system of the vehicle, (viii) a blind spot monitoring system of the vehicle and (ix) an adaptive cruise control system of the vehicle. Optionally, the ECU may also or otherwise process radar data captured by a radar sensor of the vehicle or other data captured by other sensors of the vehicle (such as other cameras or radar sensors or such as one or more lidar sensors of the vehicle). Optionally, the ECU may process captured data for an autonomous control system of the vehicle that controls steering and/or braking and/or accelerating of the vehicle as the vehicle travels along the road.

[0032] Optionally, the vision system may include a display for displaying images captured by one or more of the imaging sensors for viewing by the driver of the vehicle while the driver is normally operating the vehicle. Optionally, for example, the vision system may include a video display device, such as by utilizing aspects of the video display systems described in U.S. Pat. Nos. 5,530,240; 6,329,925; 7,855,755; 7,626,749; 7,581,859; 7,446,650; 7,338,177; 7,274,501; 7,255,451; 7,195,381; 7,184,190; 5,668,663; 5,724,187; 6,690,268; 7,370,983; 7,329,013; 7,308,341; 7,289,037; 7,249,860; 7,004,593; 4,546,551; 5,699,044; 4,953,305; 5,576,687; 5,632,092; 5,708,410; 5,737,226; 5,802,727; 5,878,370; 6,087,953; 6,173,501; 6,222,460; 6,513,252 and/or 6,642,851, and/or U.S. Publication Nos. US-2014-0022390; US-2012-0162427; US-2006-0050018 and/or US-2006-0061008, which are all hereby incorporated herein by reference in their entireties.

[0033] Changes and modifications in the specifically described embodiments can be carried out without departing from the principles of the invention, which is intended to be limited only by the scope of the appended claims, as interpreted according to the principles of patent law including the doctrine of equivalents.

1. A vehicular camera assembly, the vehicular camera assembly comprising:

a first imaging sensor that is operable to capture first image data;

a second imaging sensor that is operable to capture second image data;

a polarizing beam splitter (PBS);

an optical element, wherein light incident at the vehicular camera assembly passes through the optical element to be incident at the PBS;

wherein the vehicular camera assembly is configured to be disposed at a vehicle equipped with a vehicular vision system;

wherein, with the vehicular camera assembly disposed at the vehicle, and with a light source at the vehicle emitting light that is directed toward an object as circularly polarized light, (i) reflected circularly polarized light reflected from the object is incident at the vehicular camera assembly and (ii) backscattered natural light is incident at the vehicular camera assembly;

wherein a first portion of the backscattered natural light comprises backscattered natural light having a first orthogonal polarization state and a second portion of the backscattered natural light comprises backscattered natural light having a second orthogonal polarization state;

wherein the reflected circularly polarized light incident at the vehicular camera assembly passes through the optical element and is incident at the PBS as reflected linearly polarized light having the first orthogonal polarization state, and wherein the first portion of the backscattered natural light and the second portion of the backscattered natural light pass through the optical element;

wherein the PBS (i) directs the reflected linearly polarized light and the first portion of the backscattered natural light to the first imaging sensor capturing the first image data and (ii) directs the second portion of the backscattered natural light to the second imaging sensor capturing the second image data; and

wherein the vehicular vision system detects an object based on processing of the first image data and the second image data.

2. The vehicular camera assembly of claim **1**, wherein the light source at the vehicle emits light that passes through a polarizer, and wherein the polarizer directs the circularly polarized light toward the object as circularly polarized light having a first polarization, and wherein the reflected circularly polarized light has a second polarization different than the first polarization.

3. The vehicular camera assembly of claim **1**, wherein the vehicular vision system processes a frame of image data formed from at least a portion of the first image data and at least a portion of the second image data, and wherein the frame of image data has a reduction in glare and the backscattered natural light.

4. The vehicular camera assembly of claim **1**, wherein the optical element comprises a quarter-wave plate.

5. The vehicular camera assembly of claim **1**, wherein the PBS (i) reflects the reflected linearly polarized light and the first portion of the backscattered natural light toward the first imaging sensor and (ii) transmits the second portion of the backscattered natural light toward the second imaging sensor.

6. The vehicular camera assembly of claim **1**, wherein the PBS prevents transmission of the reflected linearly polarized light toward the second imaging sensor and prevents transmission of the first portion of the backscattered natural light toward the second imaging sensor.

7. The vehicular camera assembly of claim **1**, wherein the first image data comprises a first frame of image data representative of a scene exterior the vehicle, and wherein the first frame of image data is representative of only the reflected linearly polarized light and the first portion of the backscattered natural light, and wherein the second image data comprises a second frame of image data representative of the scene exterior the vehicle, and wherein the second frame of image data is representative of only the second portion of the backscattered natural light.

8. The vehicular camera assembly of claim **7**, wherein the vehicular vision system processes the first image data and the second image data to subtract the second frame of image data from the first frame of image data to determine a remaining frame of image data, and wherein the remaining frame of image data has a reduction in glare and the backscattered natural light.

9. The vehicular camera assembly of claim **7**, wherein the first portion of the backscattered natural light and the second portion of the backscattered natural light each comprise

approximately fifty percent of the backscattered natural light transmitted through the optical element.

10. The vehicular camera assembly of claim **7**, wherein the first frame of image data and the second frame of image data are aligned on a pixel-by-pixel basis.

11. The vehicular camera assembly of claim **1**, wherein the light source comprises a headlamp of the vehicle.

12. The vehicular camera assembly of claim **1**, wherein the light source comprises a taillamp of the vehicle.

13. A vehicular camera assembly, the vehicular camera assembly comprising:

a first imaging sensor that is operable to capture first image data;

a second imaging sensor that is operable to capture second image data;

a polarizing beam splitter (PBS);

an optical element, wherein light incident at the vehicular camera assembly passes through the optical element to be incident at the PBS;

wherein the vehicular camera assembly is configured to be disposed at a vehicle equipped with a vehicular vision system;

wherein, with the vehicular camera assembly disposed at the vehicle, and with a light source at the vehicle emitting light that is directed toward an object as circularly polarized light, (i) reflected circularly polarized light reflected from the object is incident at the vehicular camera assembly and (ii) backscattered natural light is incident at the vehicular camera assembly;

wherein the light source at the vehicle emits light that passes through a polarizer, and wherein the polarizer directs the circularly polarized light toward the object as circularly polarized light having a first polarization, and wherein the reflected circularly polarized light has a second polarization different than the first polarization;

wherein a first portion of the backscattered natural light comprises backscattered natural light having a first orthogonal polarization state and a second portion of the backscattered natural light comprises backscattered natural light having a second orthogonal polarization state;

wherein the reflected circularly polarized light incident at the vehicular camera assembly passes through the optical element and is incident at the PBS as reflected linearly polarized light having the first orthogonal polarization state, and wherein the first portion of the backscattered natural light and the second portion of the backscattered natural light pass through the optical element;

wherein the PBS (i) directs the reflected linearly polarized light and the first portion of the backscattered natural light to the first imaging sensor capturing the first image data and (ii) directs the second portion of the backscattered natural light to the second imaging sensor capturing the second image data;

wherein the vehicular vision system processes a frame of image data formed from at least a portion of the first image data and at least a portion of the second image data, and wherein the frame of image data has a reduction in glare and the backscattered natural light; and

wherein the vehicular vision system detects an object based on processing of the first image data and the second image data.

14. The vehicular camera assembly of claim **13**, wherein the optical element comprises a quarter-wave plate.

15. The vehicular camera assembly of claim **13**, wherein the PBS prevents transmission of the reflected linearly polarized light toward the second imaging sensor and prevents transmission of the first portion of the backscattered natural light toward the second imaging sensor.

16. The vehicular camera assembly of claim **1**, wherein the light source comprises one selected from the group consisting of (i) a headlamp of the vehicle and (ii) a taillamp of the vehicle.

17. A vehicular camera assembly, the vehicular camera assembly comprising:

a first imaging sensor that is operable to capture first image data;

a second imaging sensor that is operable to capture second image data;

a polarizing beam splitter (PBS);

an optical element, wherein light incident at the vehicular camera assembly passes through the optical element to be incident at the PBS;

wherein the vehicular camera assembly is configured to be disposed at a vehicle equipped with a vehicular vision system;

wherein, with the vehicular camera assembly disposed at the vehicle, and with a light source at the vehicle emitting light that is directed toward an object as circularly polarized light, (i) reflected circularly polarized light reflected from the object is incident at the vehicular camera assembly and (ii) backscattered natural light is incident at the vehicular camera assembly;

wherein the light source comprises one selected from the group consisting of (i) a headlamp of the vehicle and (ii) a taillamp of the vehicle;

wherein a first portion of the backscattered natural light comprises backscattered natural light having a first orthogonal polarization state and a second portion of the backscattered natural light comprises backscattered natural light having a second orthogonal polarization state;

wherein the reflected circularly polarized light incident at the vehicular camera assembly passes through the optical element and is incident at the PBS as reflected linearly polarized light having the first orthogonal polarization state, and wherein the first portion of the backscattered natural light and the second portion of the backscattered natural light pass through the optical element;

wherein the PBS (i) directs the reflected linearly polarized light and the first portion of the backscattered natural light to the first imaging sensor capturing the first image data and (ii) directs the second portion of the backscattered natural light to the second imaging sensor capturing the second image data;

wherein the first image data comprises a first frame of image data representative of a scene exterior the vehicle, and wherein the first frame of image data is representative of only the reflected linearly polarized light and the first portion of the backscattered natural light, and wherein the second image data comprises a second frame of image data representative of the scene

exterior the vehicle, and wherein the second frame of image data is representative of only the second portion of the backscattered natural light; and

wherein the vehicular vision system detects an object based on processing of the first image data and the second image data.

18. The vehicular camera assembly of claim **17**, wherein the light source at the vehicle emits light that passes through a polarizer, and wherein the polarizer directs the circularly polarized light toward the object as circularly polarized light having a first polarization, and wherein the reflected circularly polarized light has a second polarization different than the first polarization.

19. The vehicular camera assembly of claim **17**, wherein the optical element comprises a quarter-wave plate.

20. The vehicular camera assembly of claim **17**, wherein the PBS prevents transmission of the reflected linearly polarized light toward the second imaging sensor and prevents transmission of the first portion of the backscattered natural light toward the second imaging sensor.

21. The vehicular camera assembly of claim **17**, wherein the vehicular vision system processes the first image data and the second image data to subtract the second frame of image data from the first frame of image data to determine a remaining frame of image data, and wherein the remaining frame of image data has a reduction in glare and the backscattered natural light.

22. The vehicular camera assembly of claim **17**, wherein the first portion of the backscattered natural light and the second portion of the backscattered natural light each comprise approximately fifty percent of the backscattered natural light transmitted through the optical element.

23. The vehicular camera assembly of claim **17**, wherein the first frame of image data and the second frame of image data are aligned on a pixel-by-pixel basis.

* * * * *