US 20250260930A1

(19) United States
(12) Patent Application Publication
SEO et al.
(10) Pub. No.: US 2025/0260930 A1
(43) Pub. Date: Aug. 14, 2025

(54) **DISPLAY DEVICE**

(71) Applicant: **Samsung Display Co., LTD.**, Yongin-si (KR)

(72) Inventors: **Young Seok SEO**, Seoul (KR); **Jung Hun NOH**, Yongin-si (KR); **Seung Lyong BOK**, Hwaseong-si (KR); **Yi Joon AHN**, Seoul (KR); **Sun Mi YU**, Seoul (KR); **Jin Oh KWAG**, Yongin-si (KR)

(73) Assignee: **Samsung Display Co., LTD.**, Yongin-si (KR)

(21) Appl. No.: **19/170,226**

(22) Filed: **Apr. 4, 2025**

Related U.S. Application Data

(63) Continuation of application No. 18/451,271, filed on Aug. 17, 2023, now Pat. No. 12,273,673, which is a continuation of application No. 17/855,209, filed on Jun. 30, 2022, now Pat. No. 11,736,843, which is a continuation of application No. 17/070,527, filed on Oct. 14, 2020, now Pat. No. 11,381,895.

(30) **Foreign Application Priority Data**

Oct. 18, 2019 (KR) 10-2019-0129531

Publication Classification

(51) **Int. Cl.**

H04R 7/04	(2006.01)
G06F 3/041	(2006.01)
G06F 3/044	(2006.01)
G06V 40/13	(2022.01)
G09G 3/3233	(2016.01)
G09G 3/3266	(2016.01)
H04R 1/02	(2006.01)
H04R 3/00	(2006.01)
H10K 50/87	(2023.01)
H10K 59/12	(2023.01)
H10K 59/40	(2023.01)
H10K 59/65	(2023.01)
H10K 59/80	(2023.01)
H10K 59/88	(2023.01)

(52) **U.S. Cl.**

CPC ***H04R 7/045*** (2013.01); ***G06F 3/0412*** (2013.01); ***G06F 3/0446*** (2019.05); ***H04R 1/028*** (2013.01); ***H04R 3/00*** (2013.01); ***H10K 50/87*** (2023.02); ***H10K 59/12*** (2023.02); ***H10K 59/40*** (2023.02); *G06F 2203/04105* (2013.01); *G06F 2203/04107* (2013.01); *G06V 40/1306* (2022.01); *G06V 40/1318* (2022.01); *G09G 3/3233* (2013.01); *G09G 3/3266* (2013.01); *H04R 2499/15* (2013.01); *H10K 59/65* (2023.02); *H10K 59/8794* (2023.02); *H10K 59/88* (2023.02)

(57) **ABSTRACT**

A display device includes a display panel including a display layer including light-emitting elements disposed on a substrate, and a sensor electrode layer disposed on the display layer. The sensor electrode layer includes a first sound electrode and a second sound electrode; a vibration layer electrically contacting the first sound electrode and the second sound electrode and being deformed in response to a first sound driving voltage applied to the first sound electrode and a second sound driving voltage applied to the second sound electrode; and sensor electrodes disposed on the vibration layer. The sensor electrodes sense an input.

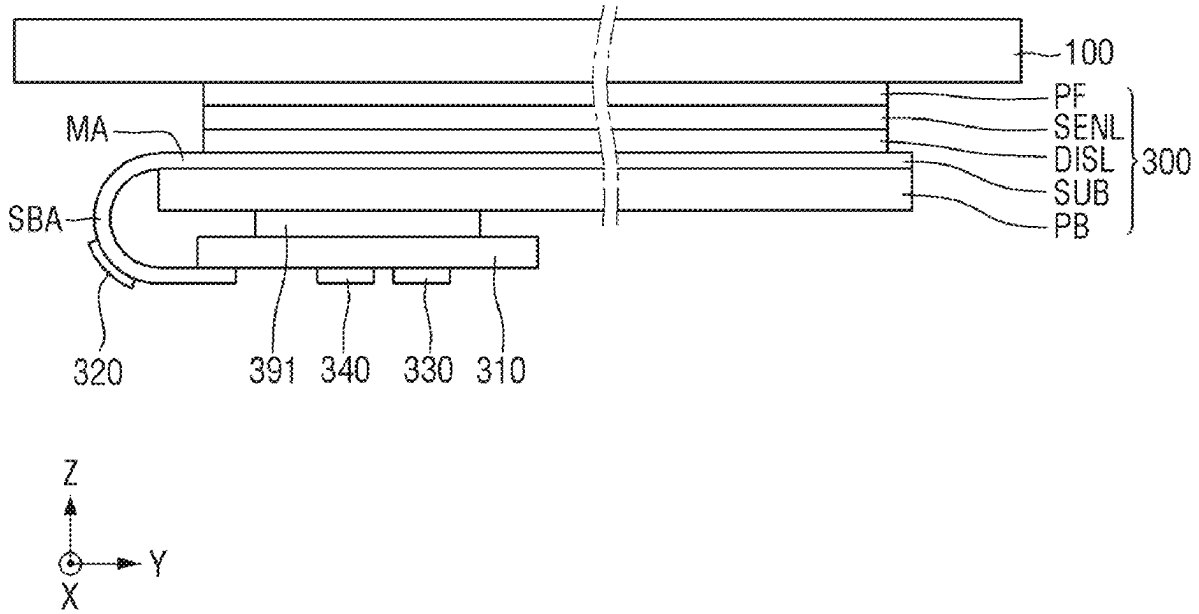

FIG. 1

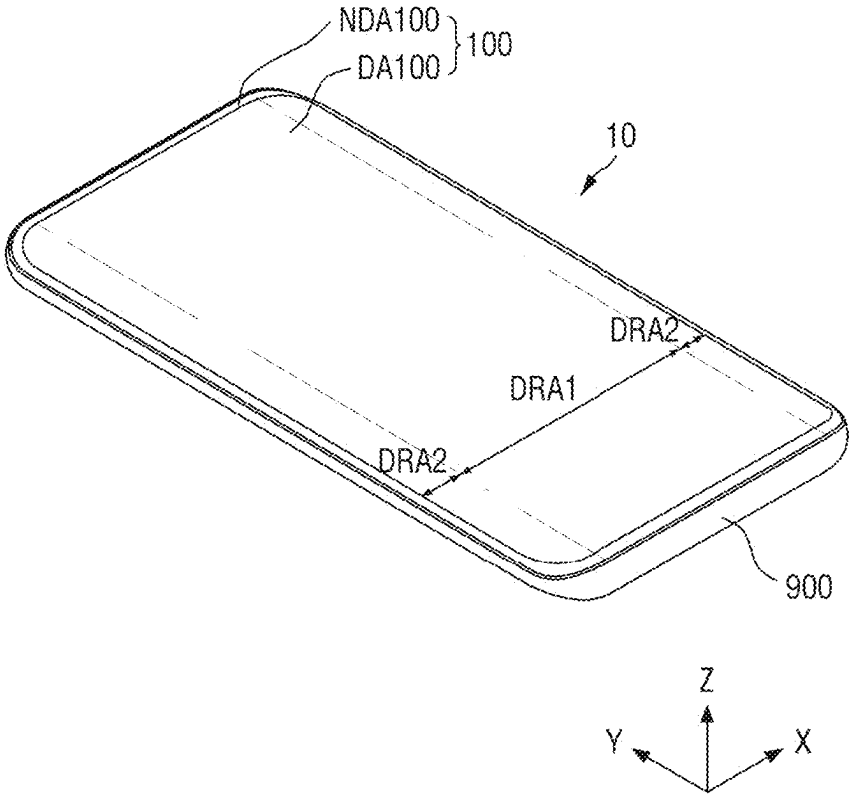

FIG. 2

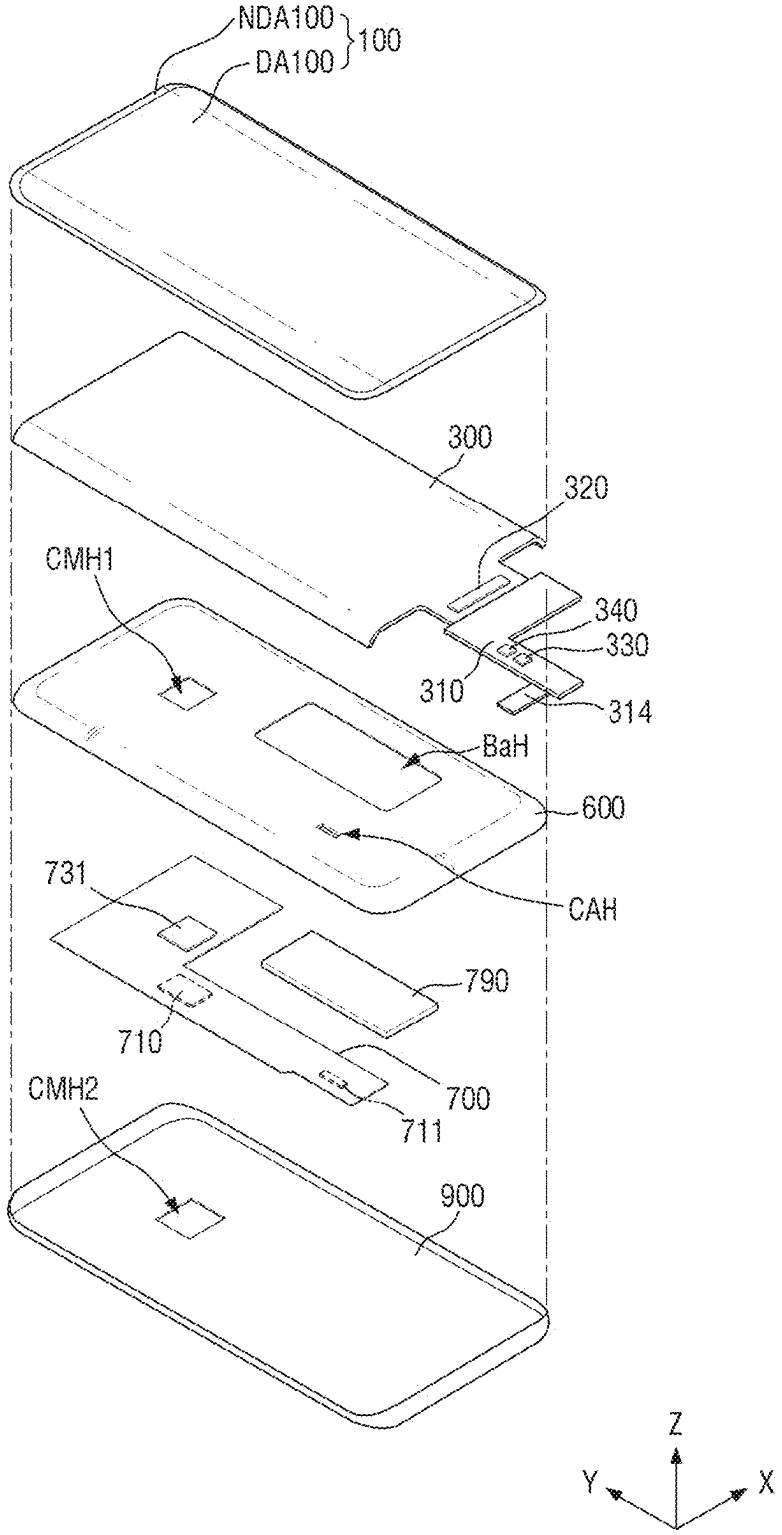
NDA100
DA100
100
300
320
CMH1
340
330
310
314
BaH
600
CAH
731
790
710
700
711
CMH2
900
Z
Y
X

FIG. 3

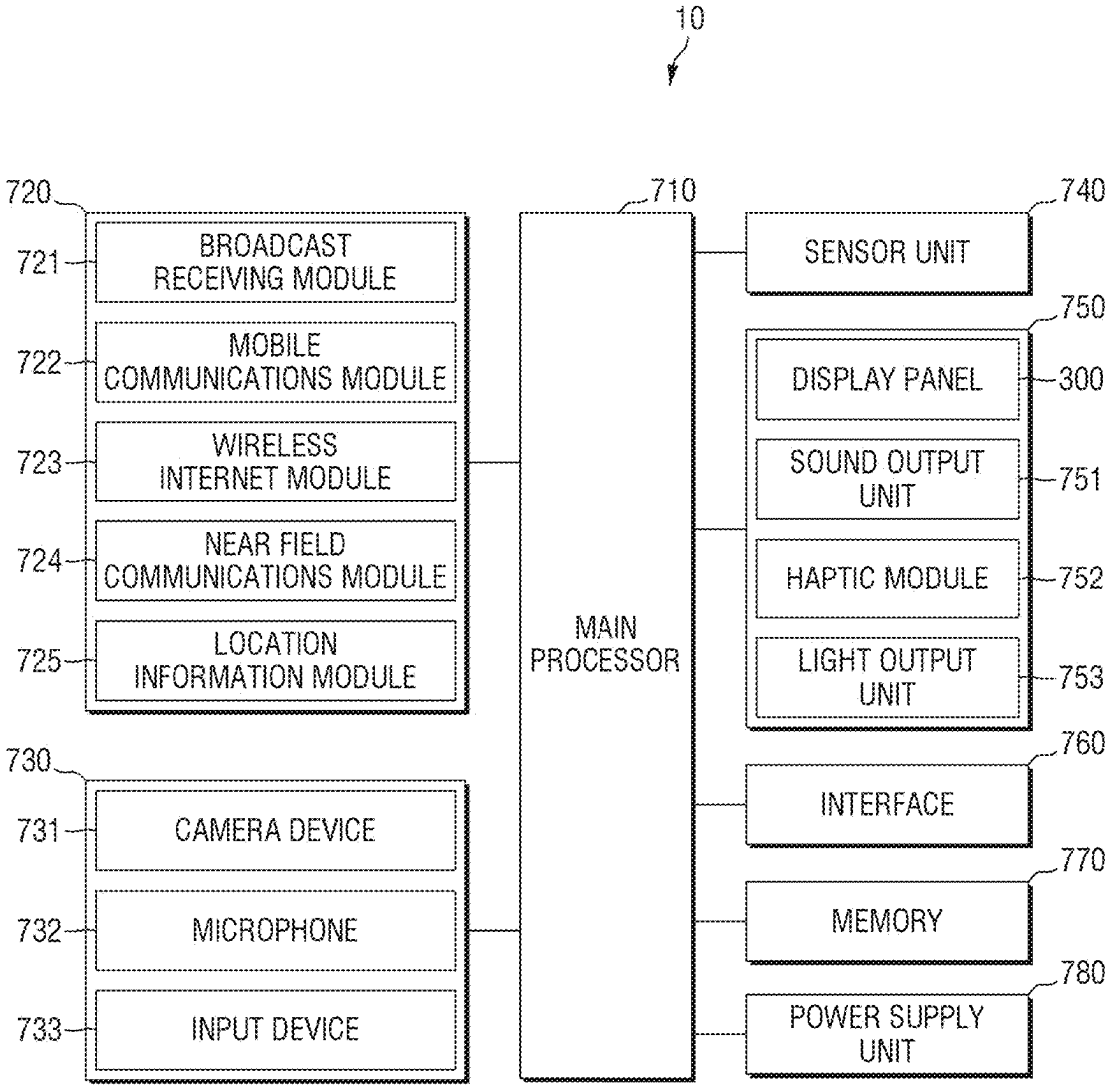
10
720
721
BROADCAST RECEIVING MODULE
722
MOBILE COMMUNICATIONS MODULE
723
WIRELESS INTERNET MODULE
724
NEAR FIELD COMMUNICATIONS MODULE
725
LOCATION INFORMATION MODULE
730
731
CAMERA DEVICE
732
MICROPHONE
733
INPUT DEVICE
710
MAIN PROCESSOR
740
SENSOR UNIT
750
DISPLAY PANEL
300
SOUND OUTPUT UNIT
751
HAPTIC MODULE
752
LIGHT OUTPUT UNIT
753
760
INTERFACE
770
MEMORY
780
POWER SUPPLY UNIT

FIG. 4

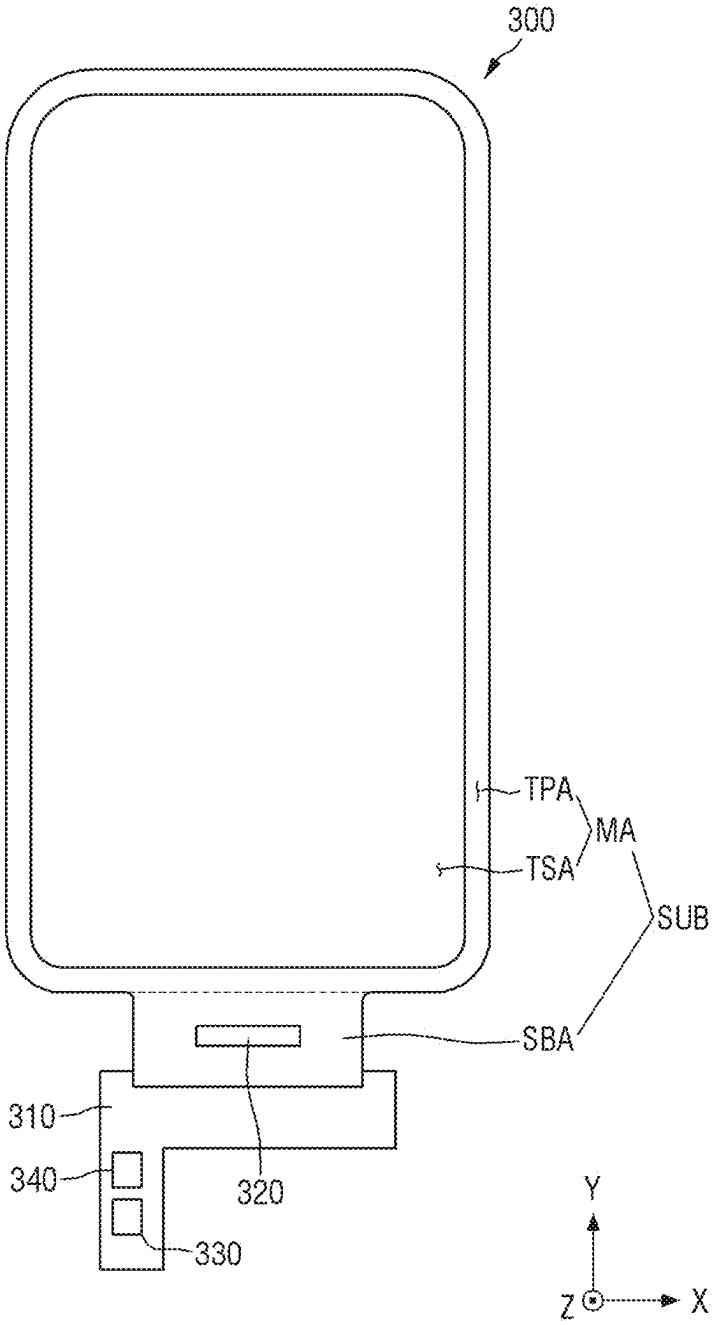

FIG. 5

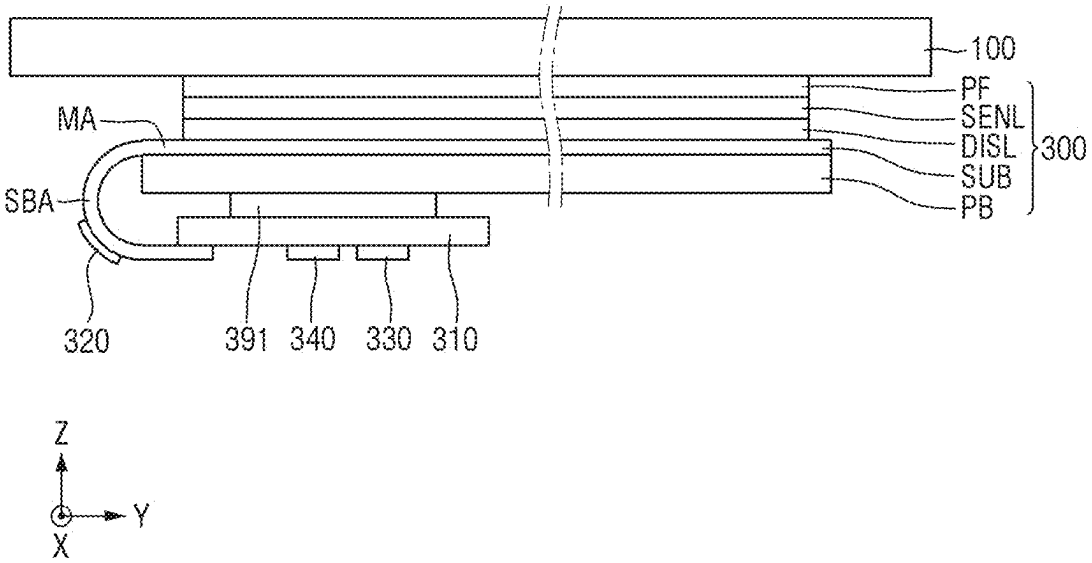

FIG. 6

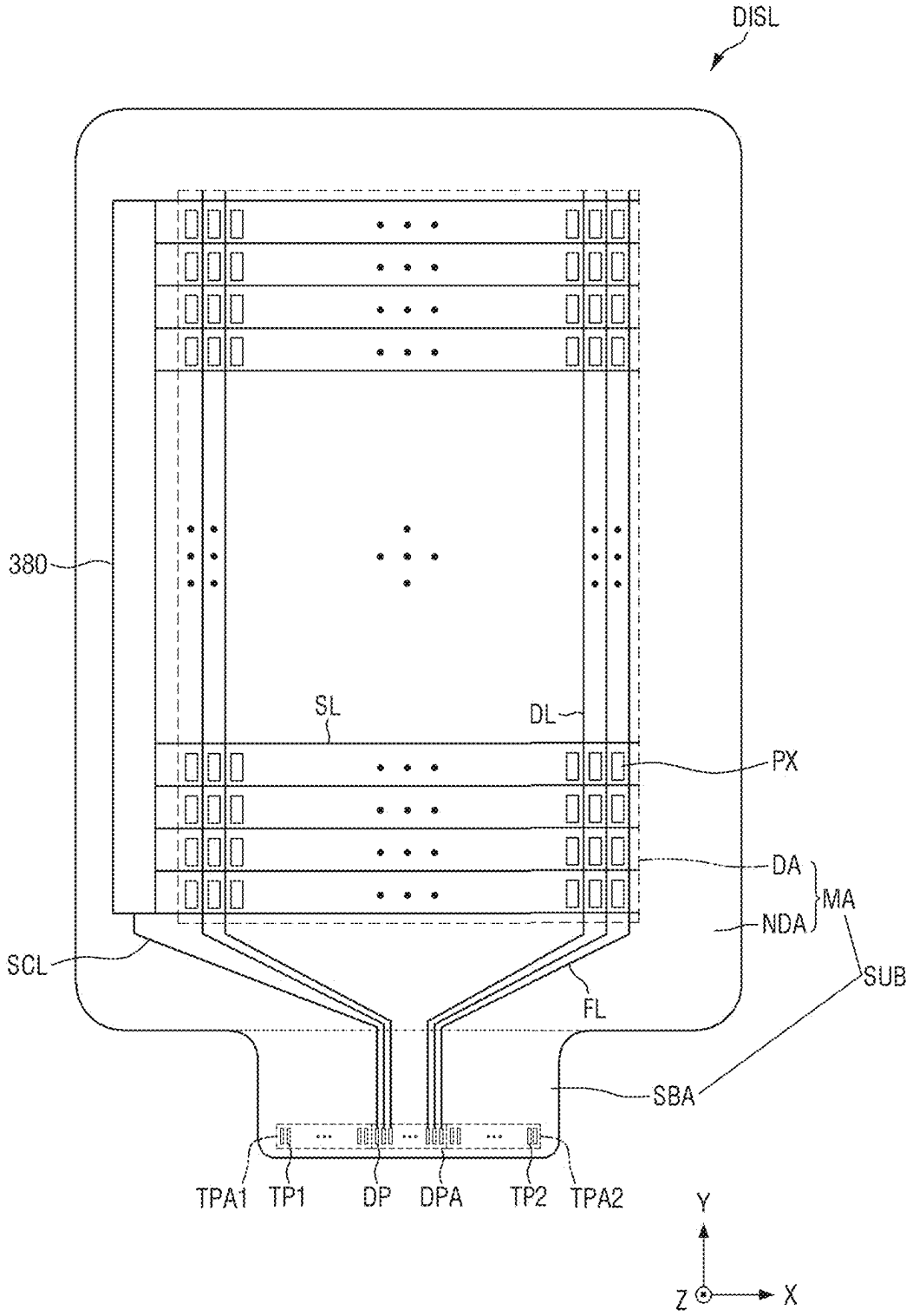
DISL
380
SL
DL
PX
DA
MA
NDA
SCL
FL
SUB
SBA
TPA1
TP1
DP
DPA
TP2
TPA2
Y
Z
X

FIG. 7

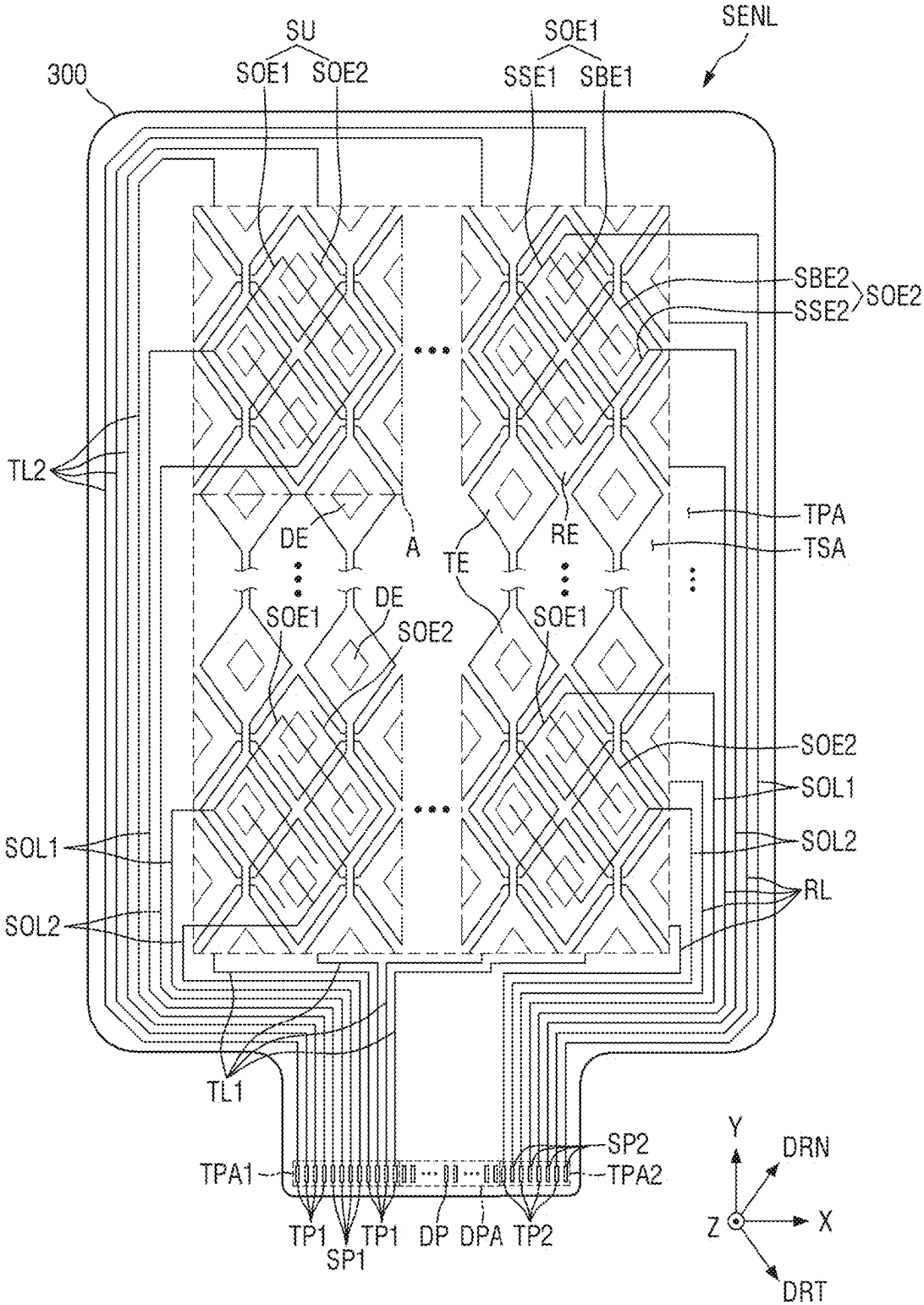
SU
SOE1
SOE2
SOE1
SSE1
SBE1
SENL
300
SBE2
SSE2
SOE2
TL2
TPA
TSA
DE
A
TE
RE
DE
SOE1
SOE2
SOE1
SOE2
SOL1
SOL2
RL
SOL1
SOL2
TL1
SP2
TPA1
TPA2
TP1
SP1
TP1
DP
DPA
TP2
Y
DRN
Z
X
DRT

FIG. 8

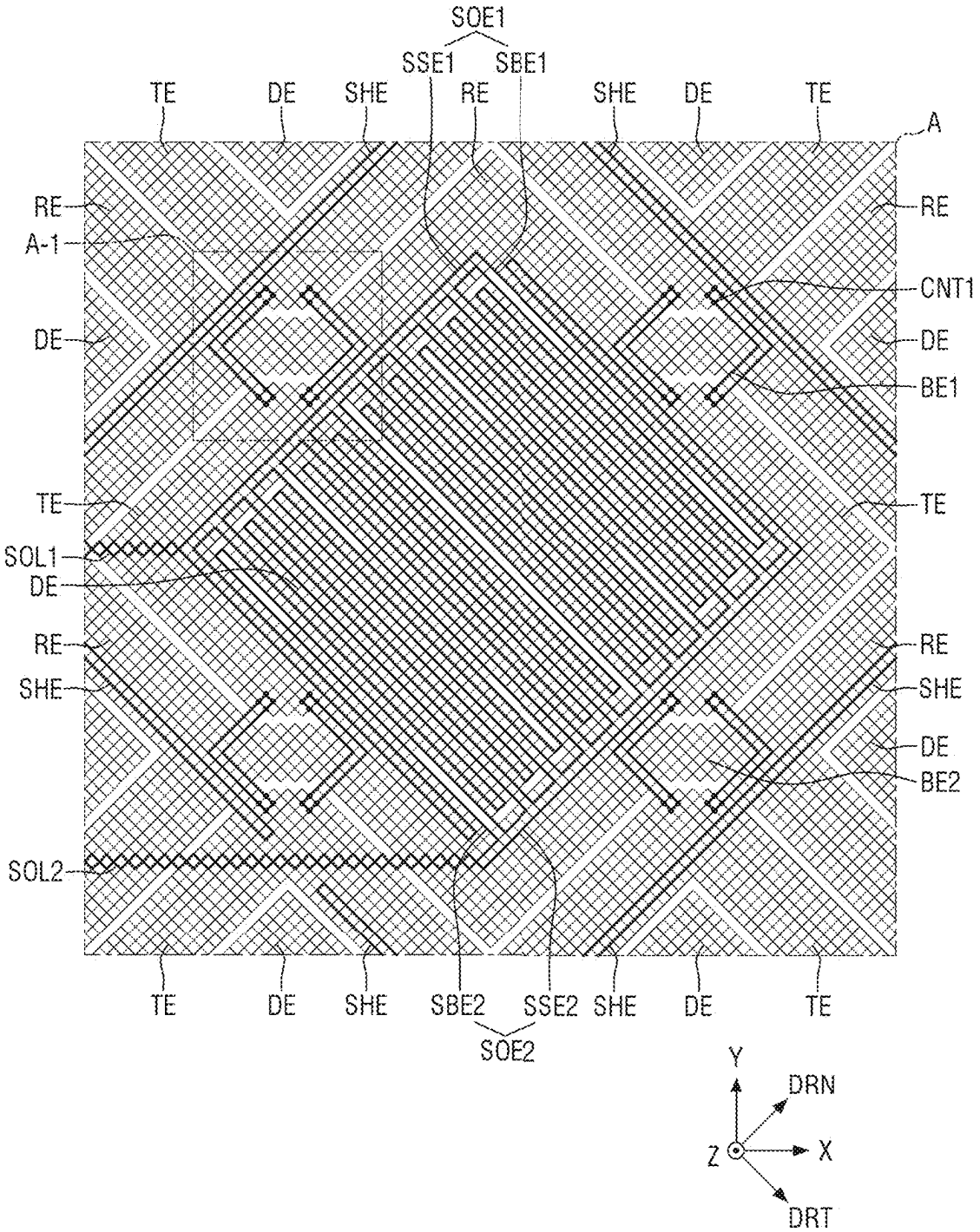
SOE1
SSE1
SBE1
TE
DE
SHE
RE
SHE
DE
TE
A
RE
A-1
RE
CNT1
DE
DE
BE1
TE
TE
SOL1
DE
RE
RE
SHE
SHE
DE
BE2
SOL2
TE
DE
SHE
SBE2
SSE2
SHE
DE
TE
SOE2
Y
DRN
Z
X
DRT

FIG. 9

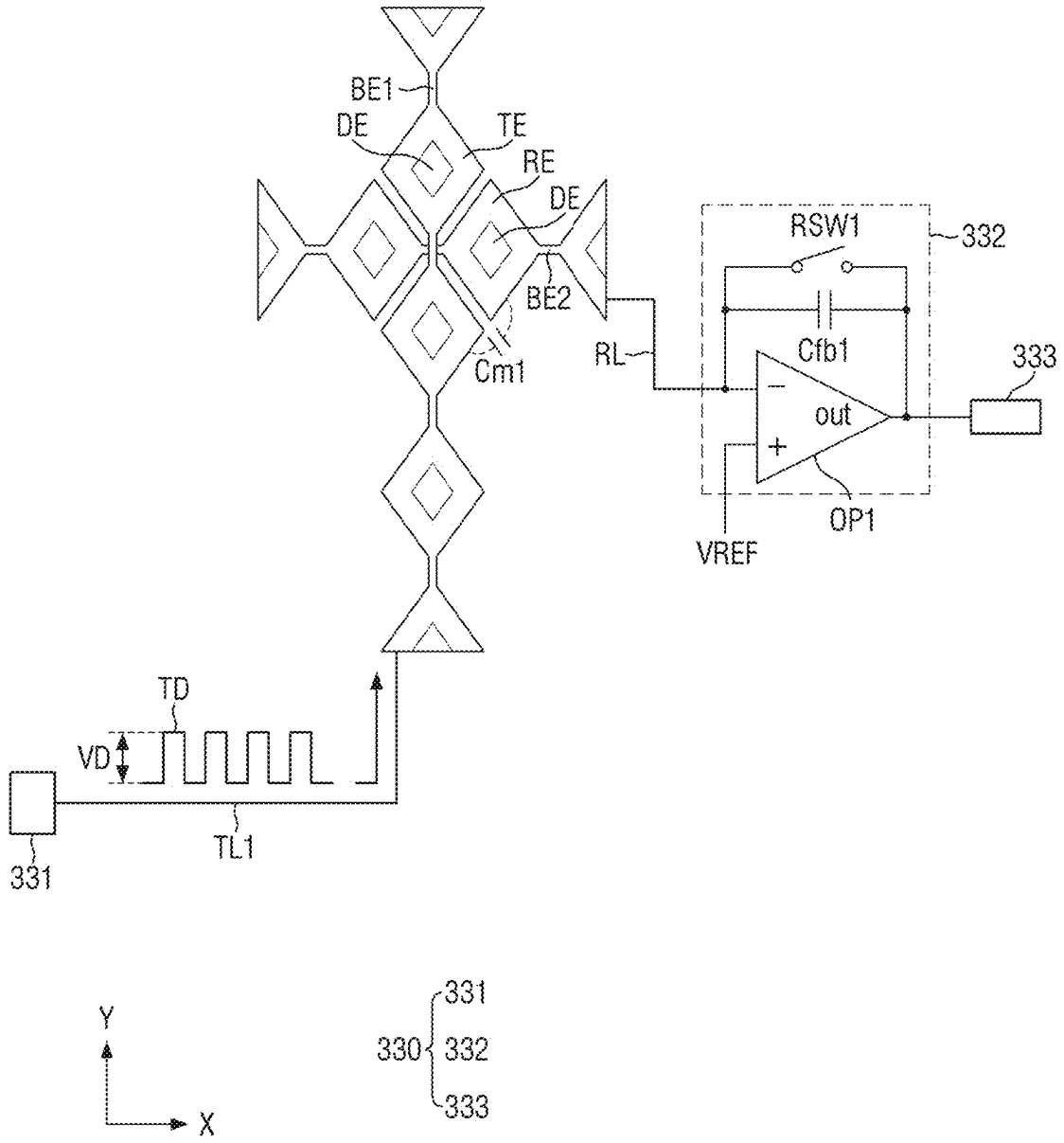
BE1
DE
TE
RE
DE
BE2
Cm1
RL
RSW1
332
Cfb1
333
out
OP1
VREF
TD
VD
TL1
331
Y
X
330
331
332
333

FIG. 10

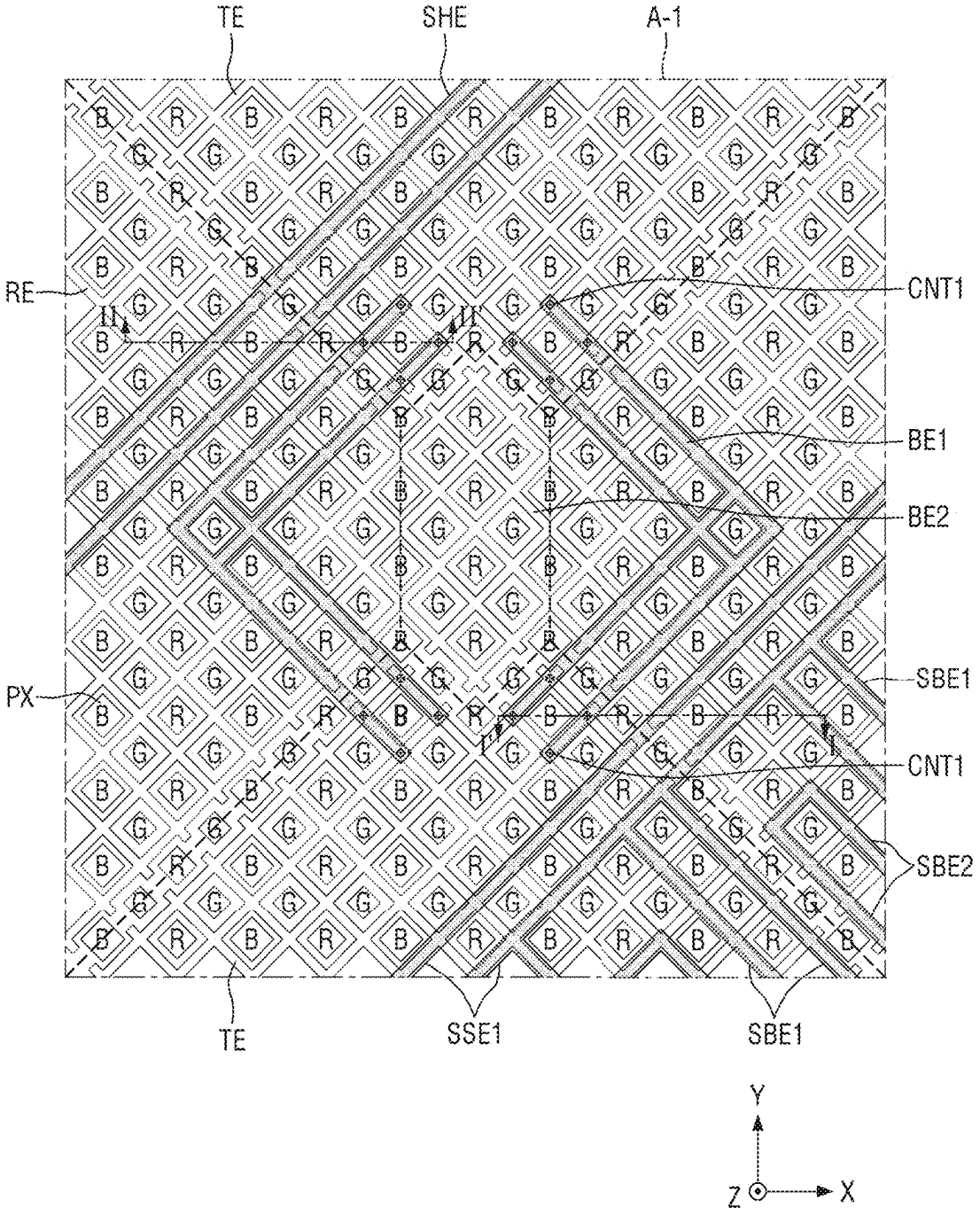

FIG. 11

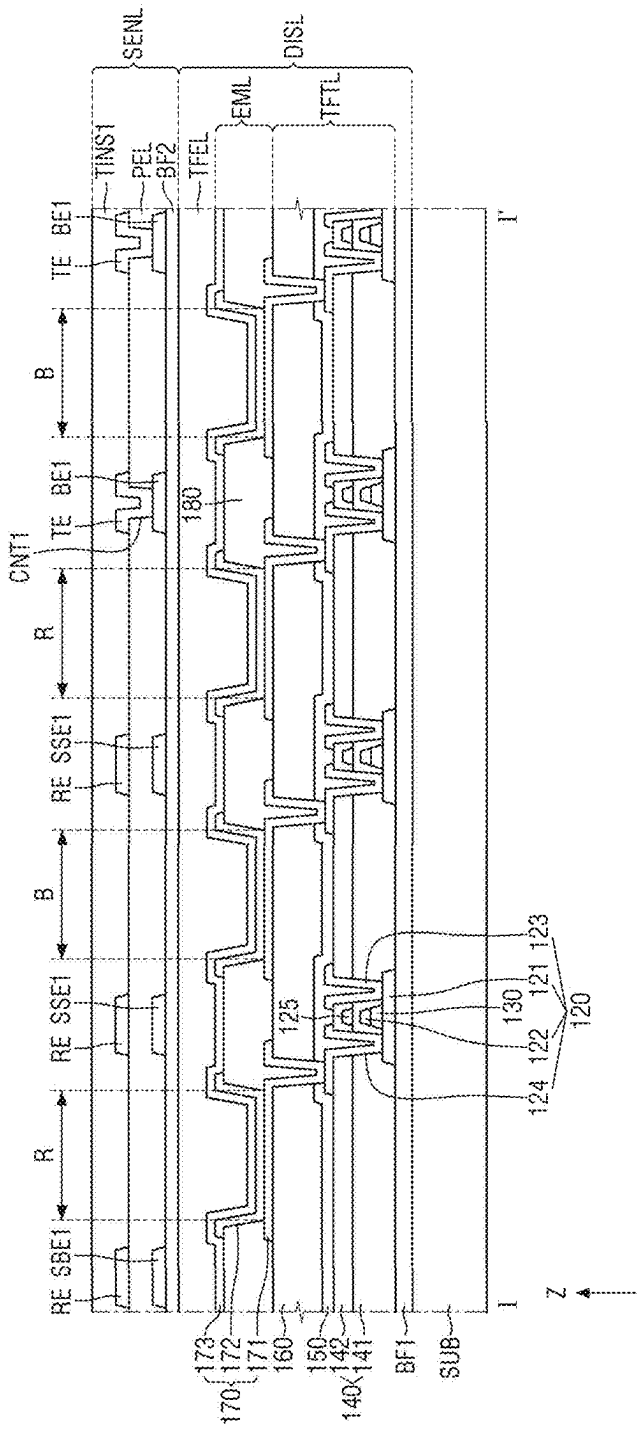
SENL
DISL
EML
TFTL
TINS1
PEL
BF2
TFEL
BE1
TE
B
R
CNT1
180
SSE1
RE
SBE1
125
123
121
130
122
124
120
173
172
171
170
160
150
142
141
140
BF1
SUB
I
I'
Z

FIG. 12

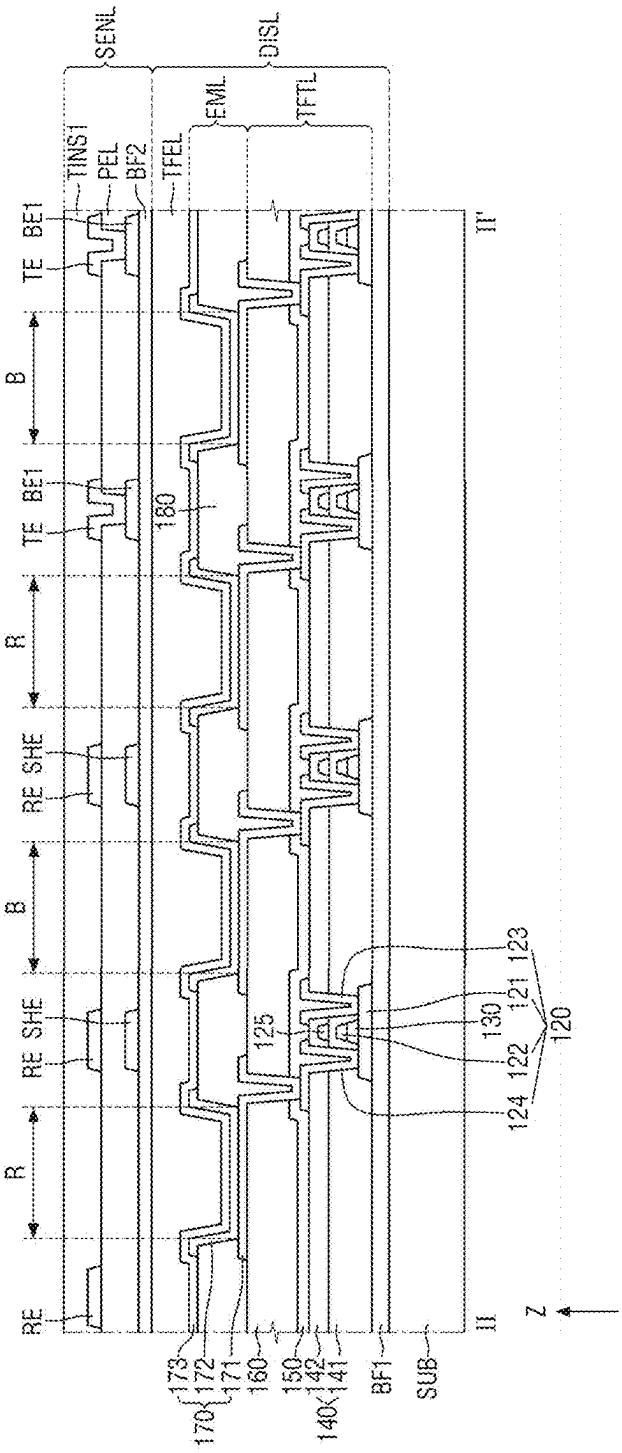
SENL
DISL
TINS1
PEL
BF2
TFEL
EML
TFTL
BE1
TE
B
R
SHE
RE
180
125
173
172
171
170
160
150
142
141
140
BF1
SUB
II
II'
Z
120
121
122
123
124
130

FIG. 13

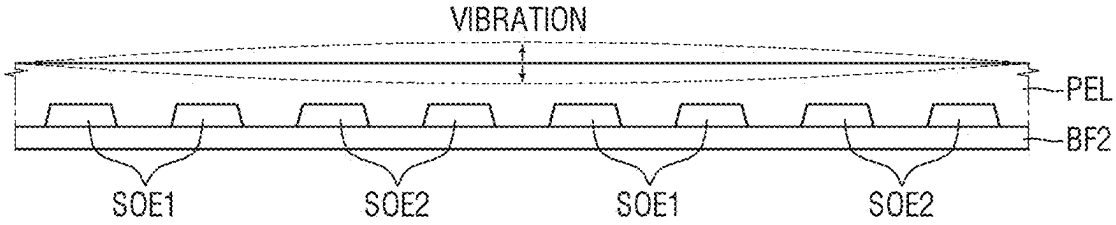

FIG. 14

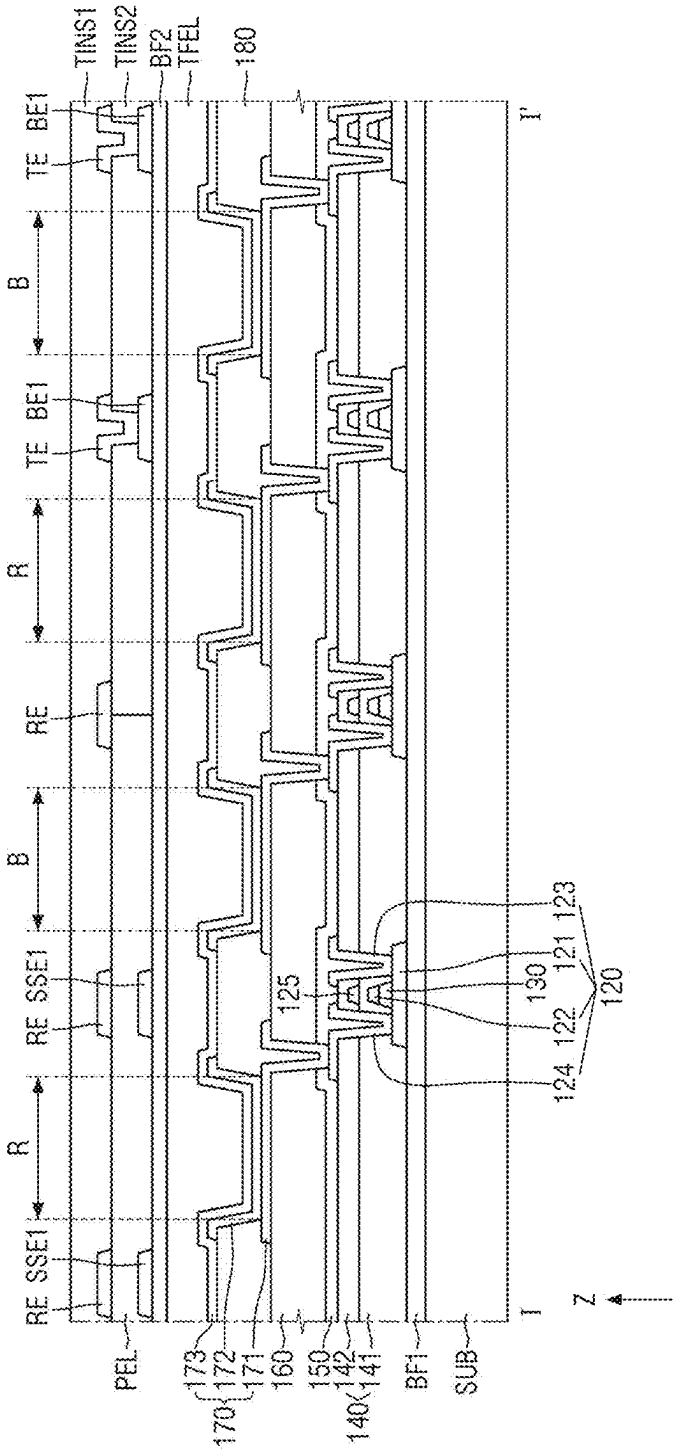
TINS1
TINS2
BF2
TFEL
180
BE1
TE
B
BE1
TE
R
RE
B
RE SSE1
R
RE SSE1
PEL
173
172
171
170
160
150
142
141
140
BF1
SUB
125
130
121
123
122
124
120
I
I'
Z

FIG. 15

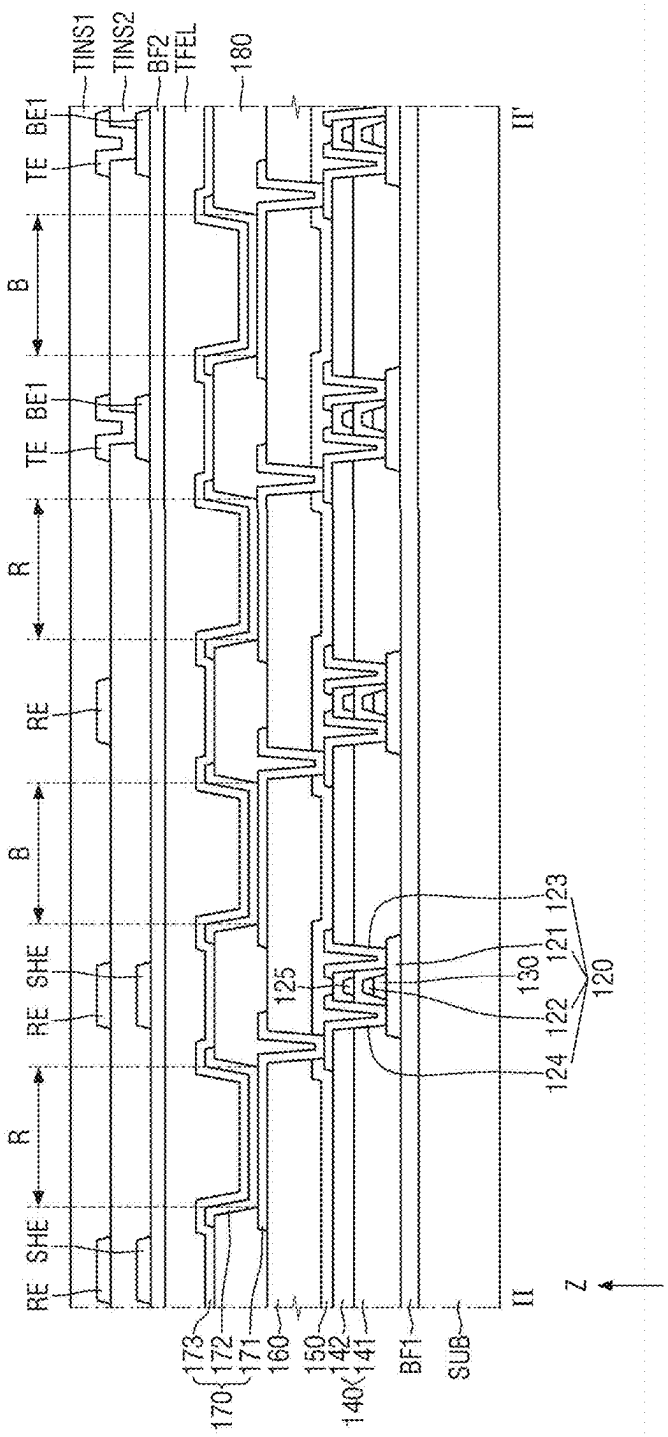
TINS1
TINS2
BF2
TFEL
180
BE1
TE
B
BE1
TE
R
RE
B
SHE
RE
R
SHE
RE
II'
II
Z
173
172
170
171
160
150
142
141
140
BF1
SUB
125
123
121
130
122
124
120

FIG. 16

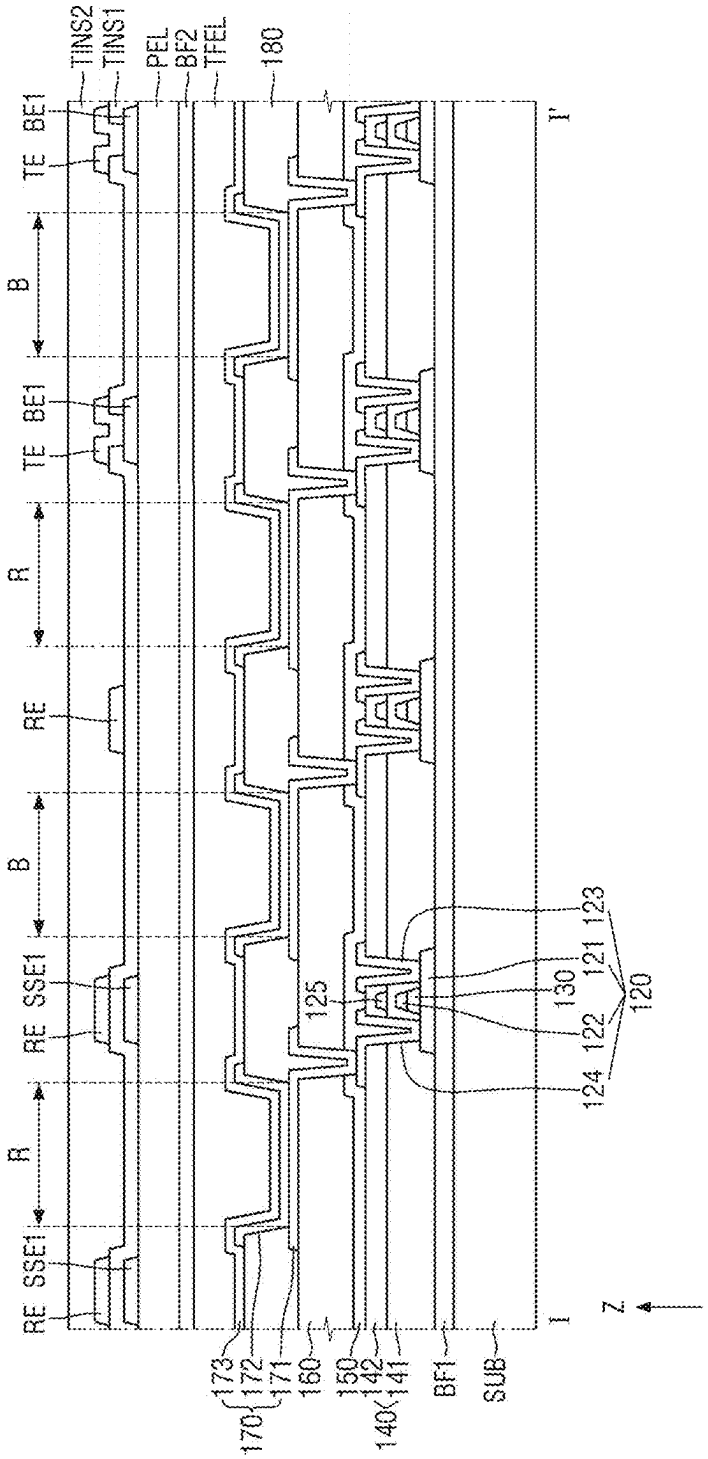
TINS2
TINS1
PEL
BF2
TFEL
180
BE1
TE
B
BE1
TE
R
RE
B
RE
SSE1
R
RE
SSE1
125
123
121
130
122
124
120
173
172
171
170
160
150
142
141
140
BF1
SUB
I
I'
Z

FIG. 17

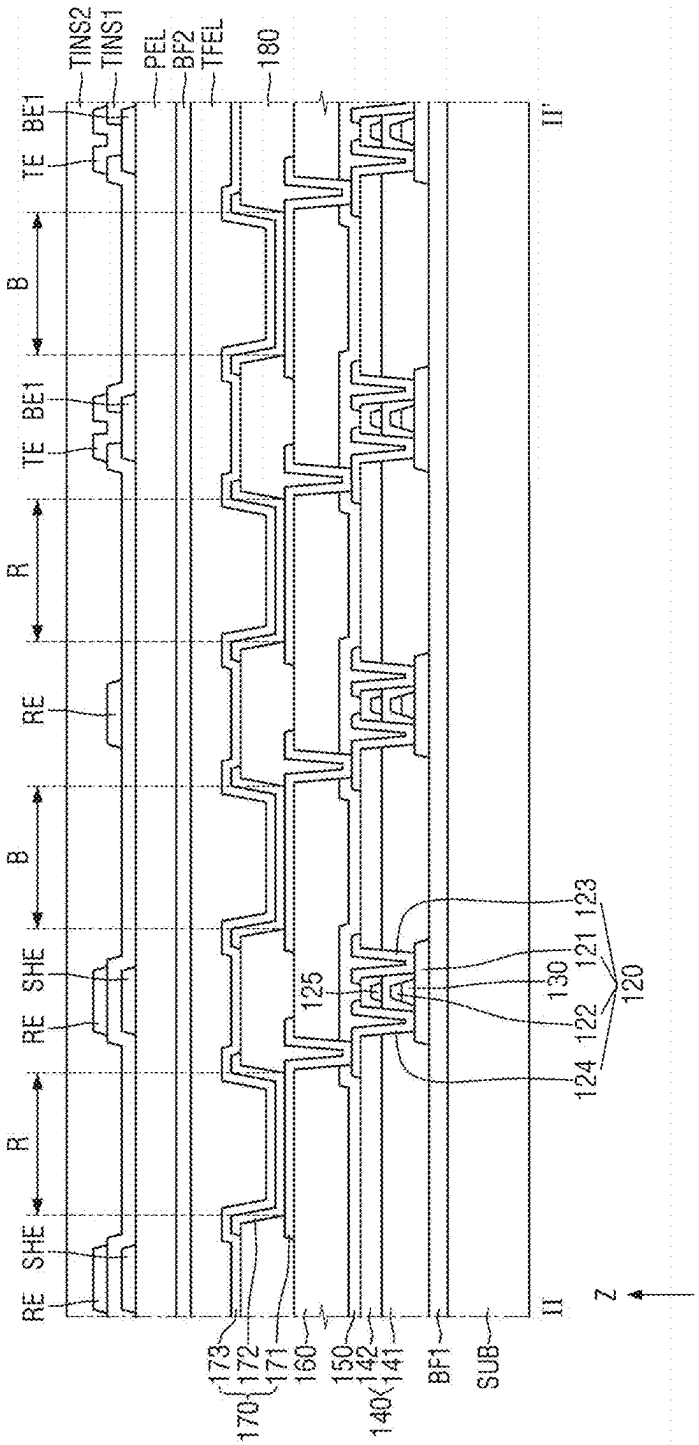
TINS2
TINS1
PEL
BF2
TFEL
180
BE1
TE
B
BE1
TE
R
RE
B
SHE
RE
R
SHE
RE
II'
II
Z
173
172
171
170
160
150
142
141
140
BF1
SUB
125
123
121
130
122
124
120

FIG. 18

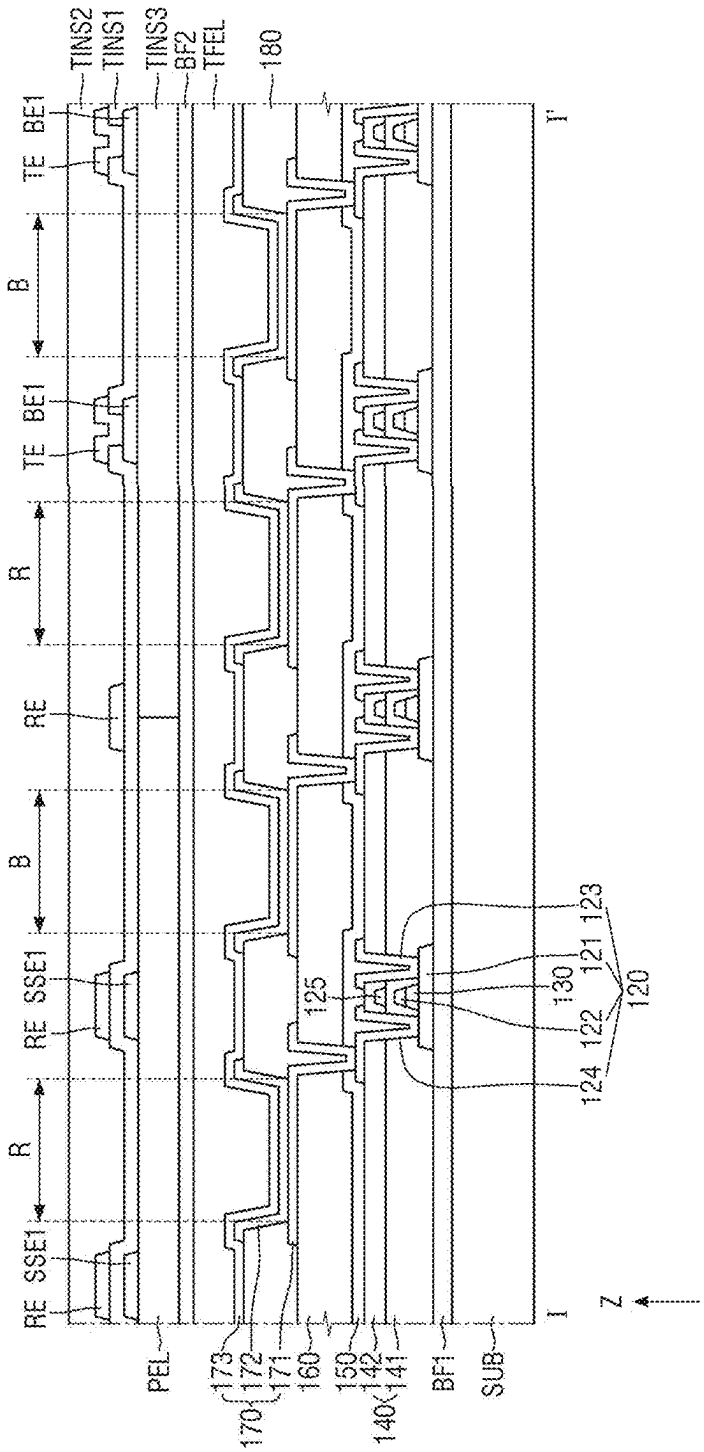
TINS2
TINS1
TINS3
BF2
TFEL
180
BE1
TE
B
BE1
TE
R
RE
B
RE
SSE1
R
RE
SSE1
I
I'
Z
PEL
173
172
171
170
160
150
142
141
140
BF1
SUB
125
123
121
130
122
124
120

FIG. 19

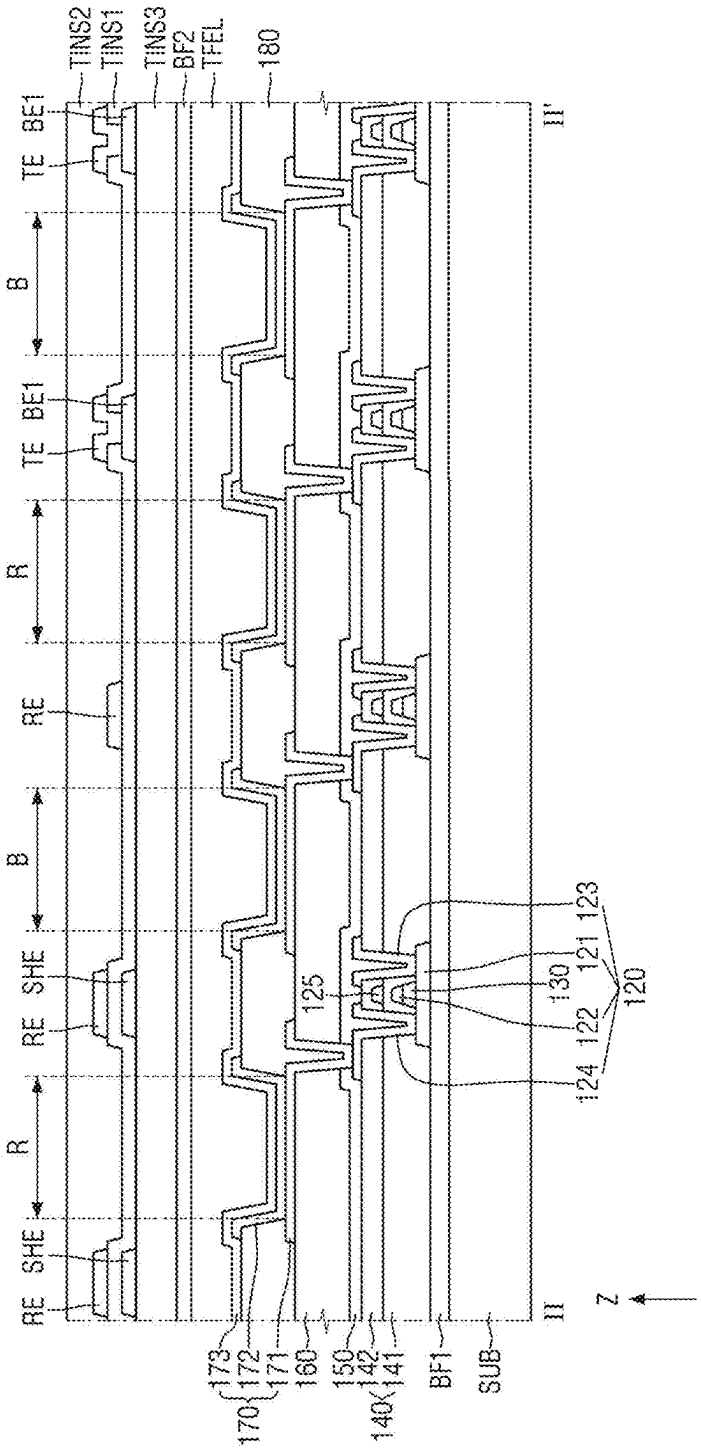
TINS2
TINS1
TINS3
BF2
TFEL
180
BE1
TE
B
BE1
TE
R
RE
B
SHE
RE
R
SHE
RE
II'
II
Z
173
172
171
170
160
150
42
141
140
BF1
SUB
125
123
121
130
122
124
120

FIG. 20

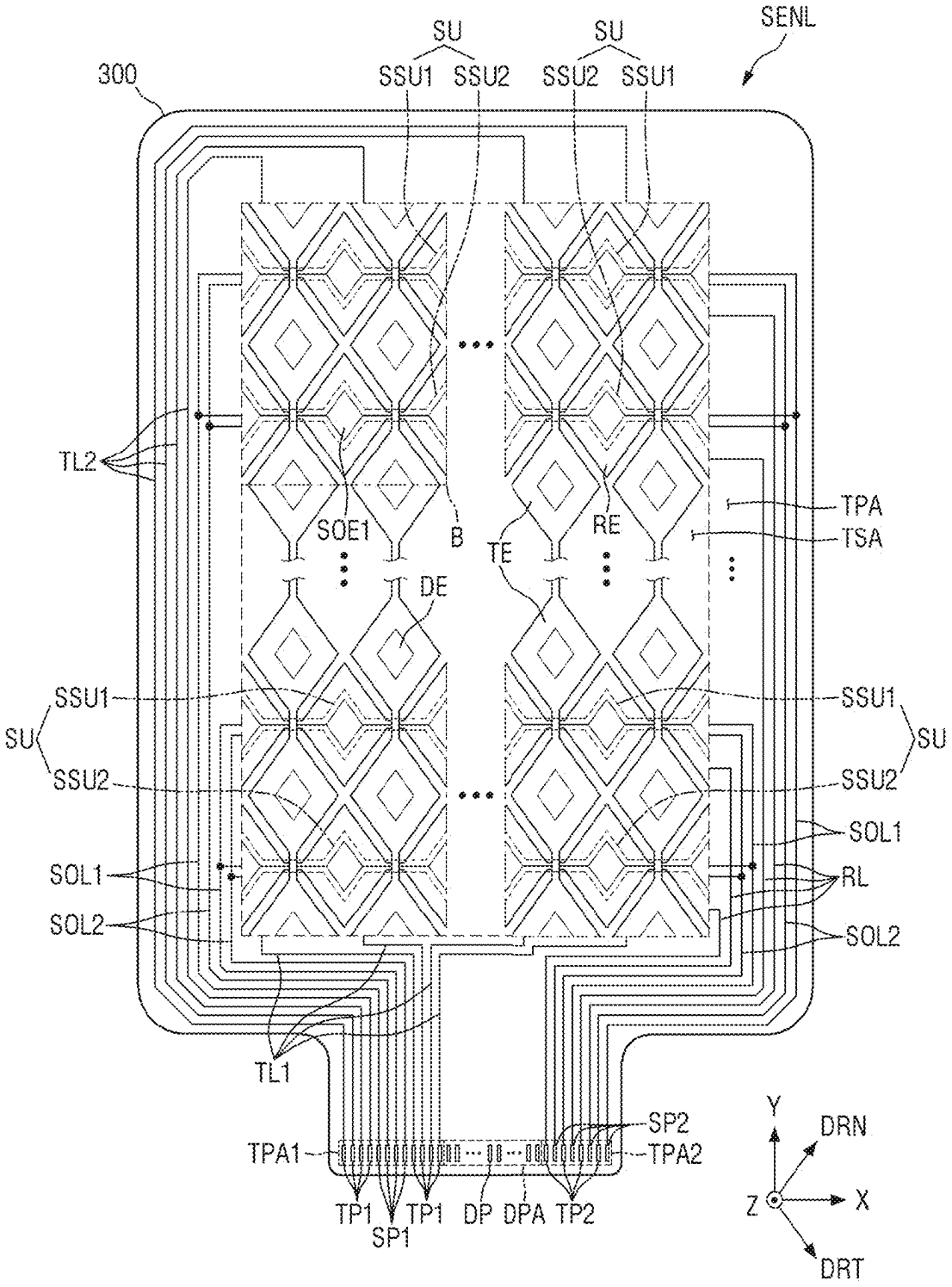
SU
SU
SENL
300
SSU1
SSU2
SSU2
SSU1
TL2
SOE1
B
TE
RE
TPA
TSA
DE
SSU1
SSU1
SU
SU
SSU2
SSU2
SOL1
SOL1
RL
SOL2
SOL2
TL1
SP2
TPA1
TPA2
TP1
TP1
DP
DPA
TP2
SP1
Y
DRN
Z
X
DRT

FIG. 21

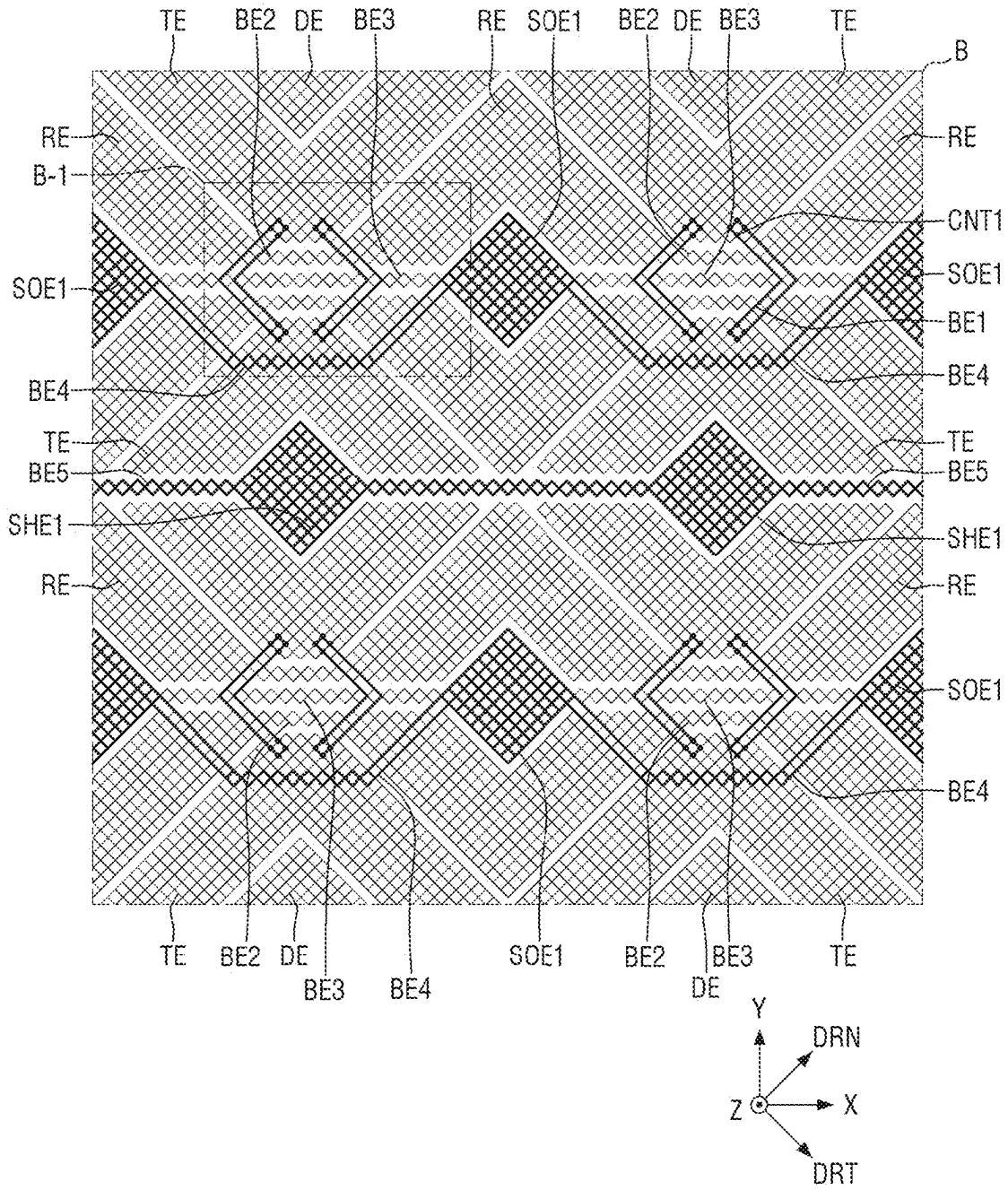
TE
BE2
DE
BE3
RE
SOE1
BE2
DE
BE3
TE
B
RE
B-1
RE
CNT1
SOE1
SOE1
BE1
BE4
BE4
TE
TE
BE5
BE5
SHE1
SHE1
RE
RE
SOE1
BE4
TE
BE2
DE
BE3
BE4
SOE1
BE2
BE3
DE
TE
Y
DRN
Z
X
DRT

FIG. 22

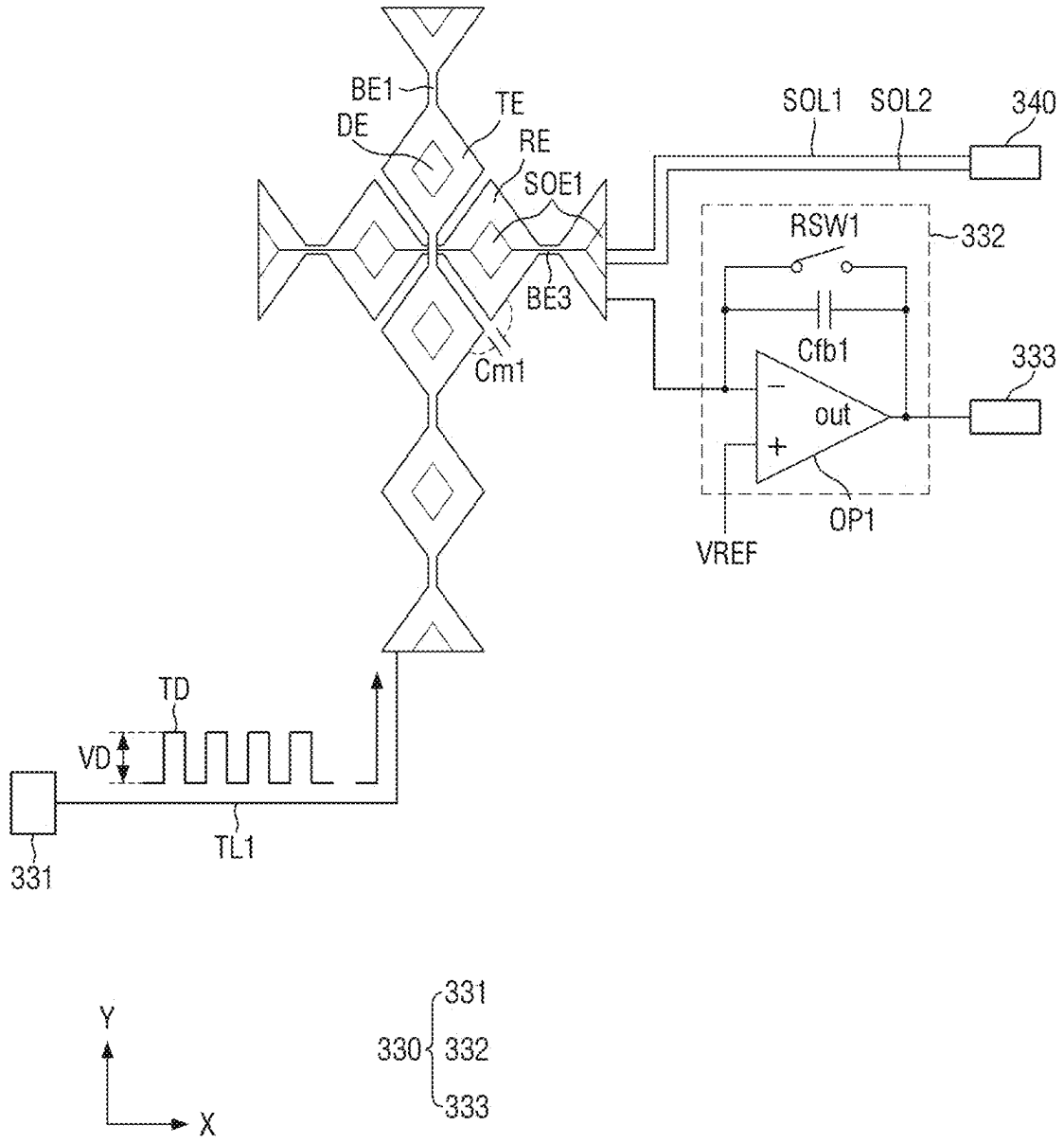
BE1
TE
DE
RE
SOE1
BE3
Cm1
SOL1
SOL2
340
RSW1
332
Cfb1
333
out
OP1
VREF
TD
VD
TL1
331
Y
X
330
331
332
333

FIG. 23

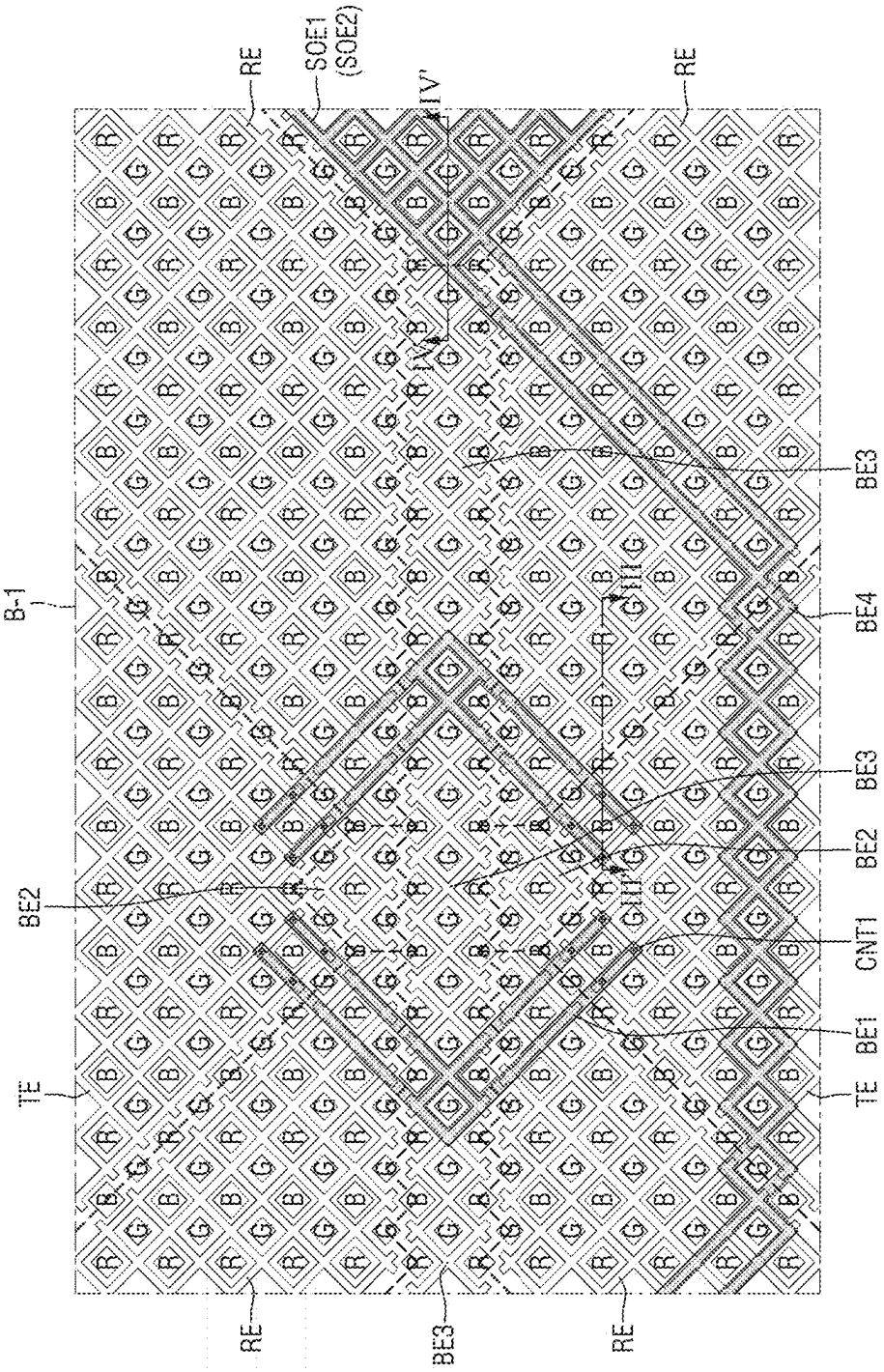
RE
SOE1
(SOE2)
IV'
RE
IV
BE3
B-1
BE4
III
BE3
BE2
BE2
III'
CNT1
BE1
TE
TE
RE
BE3
RE

FIG. 24

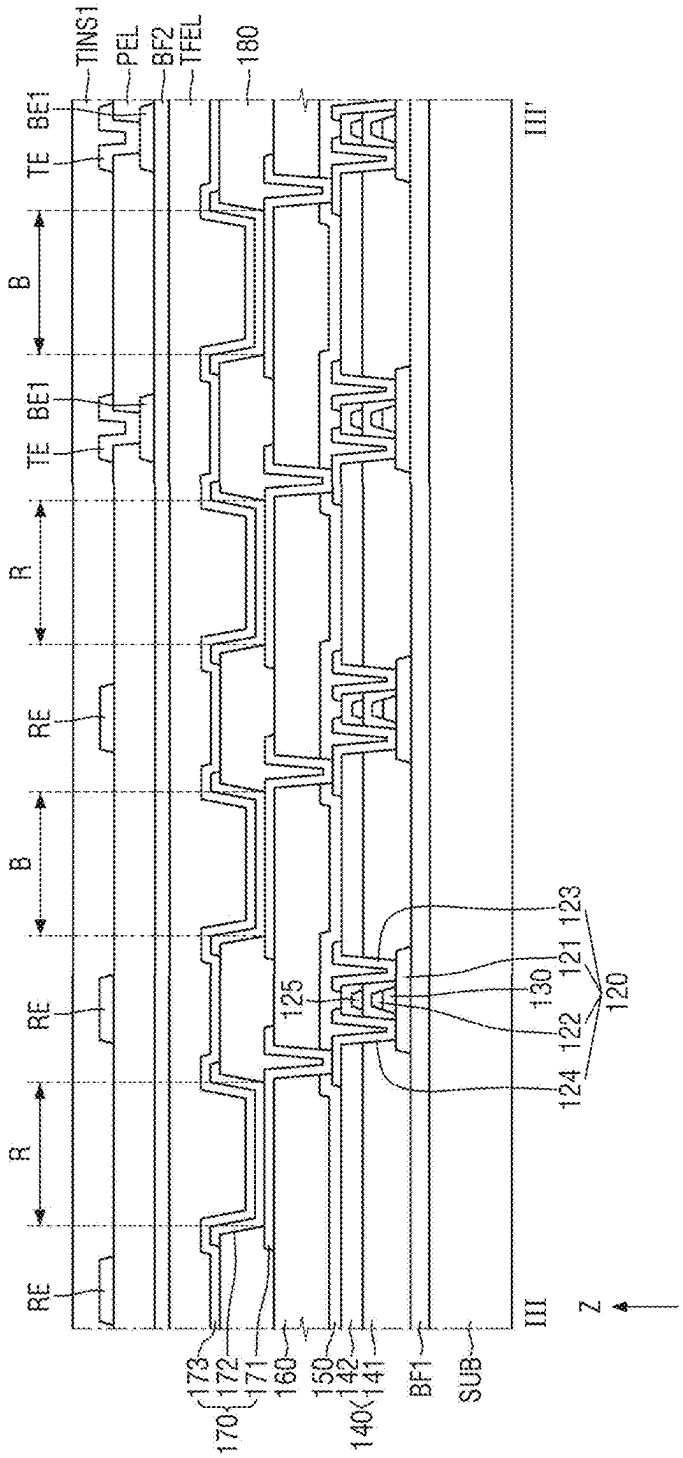
TINS1
PEL
BF2
TFEL
180
BE1
TE
B
BE1
TE
R
RE
B
RE
R
RE
III'
III
Z
123
121
130
120
125
122
124
173
172
171
170
160
150
142
141
140
BF1
SUB

FIG. 25

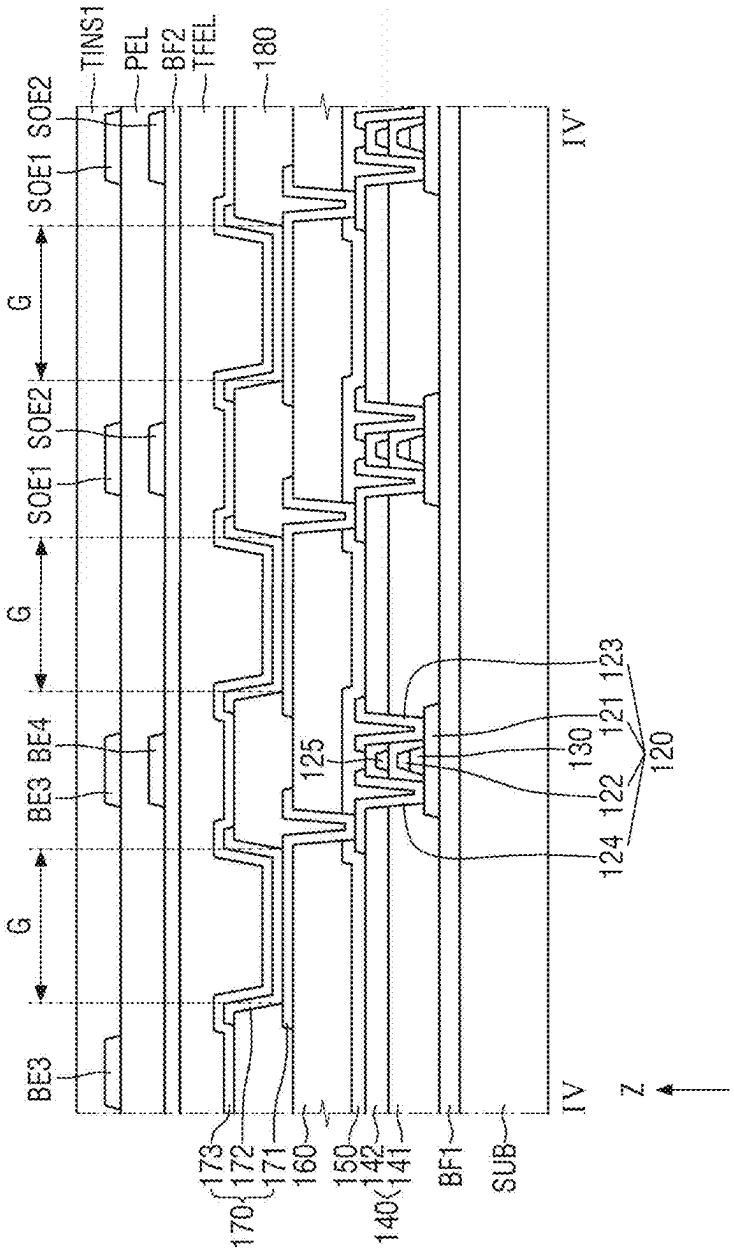
TINS1
PEL
BF2
TFEL
180
SOE2
SOE1
G
SOE2
SOE1
G
BE4
BE3
G
BE3
IV'
IV
Z
123
121
130
120
125
122
124
173
172
171
170
160
150
142
141
140
BF1
SUB

FIG. 26

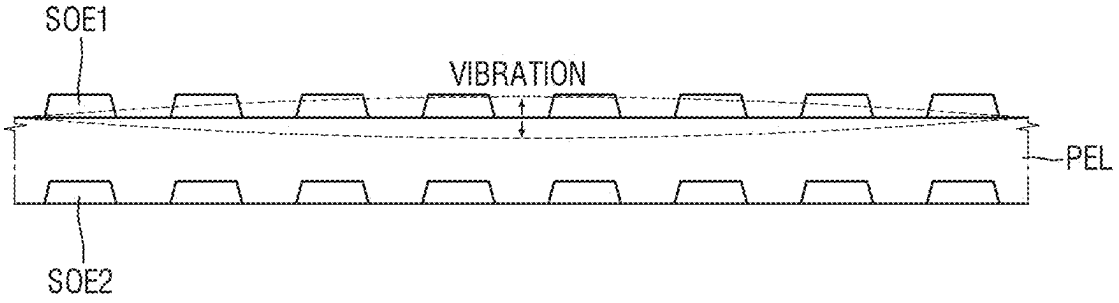

FIG. 27

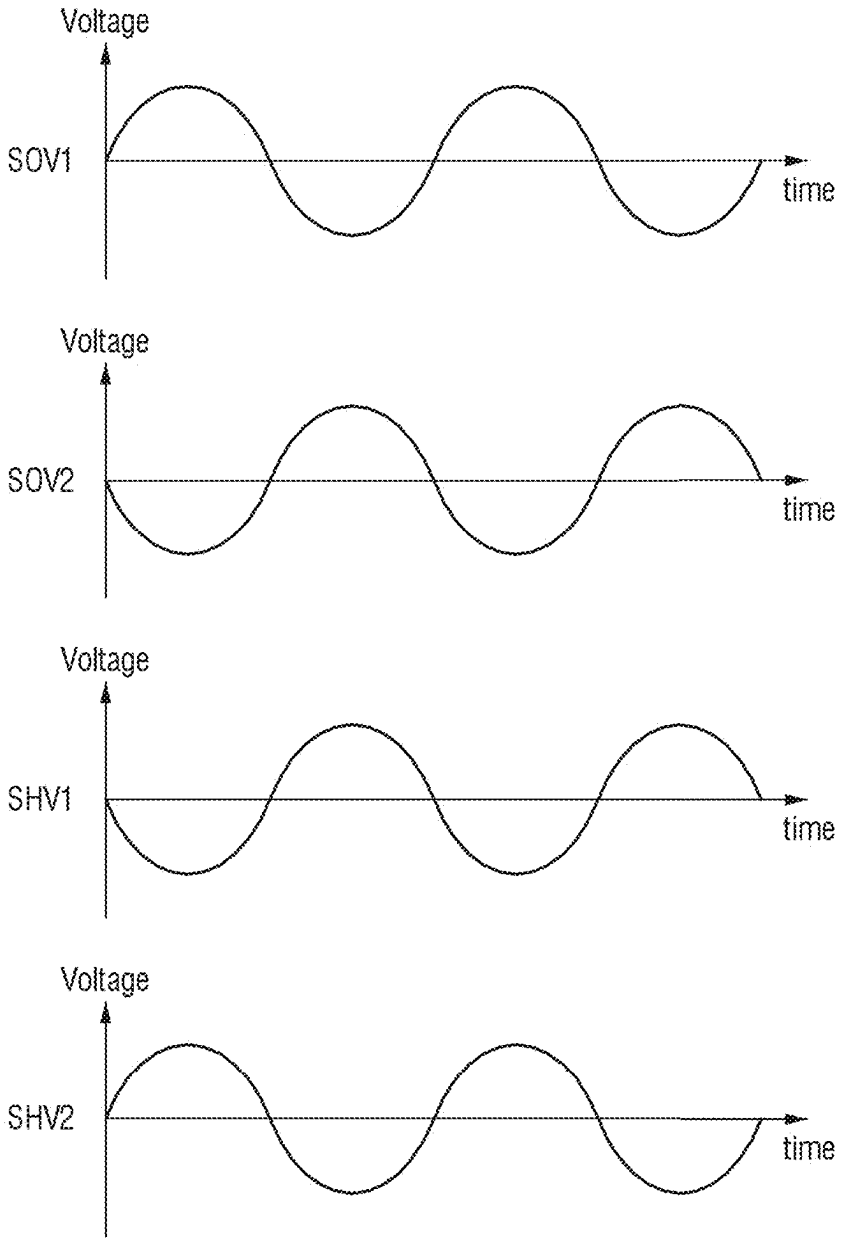
Voltage
SOV1
time
Voltage
SOV2
time
Voltage
SHV1
time
Voltage
SHV2
time

FIG. 28

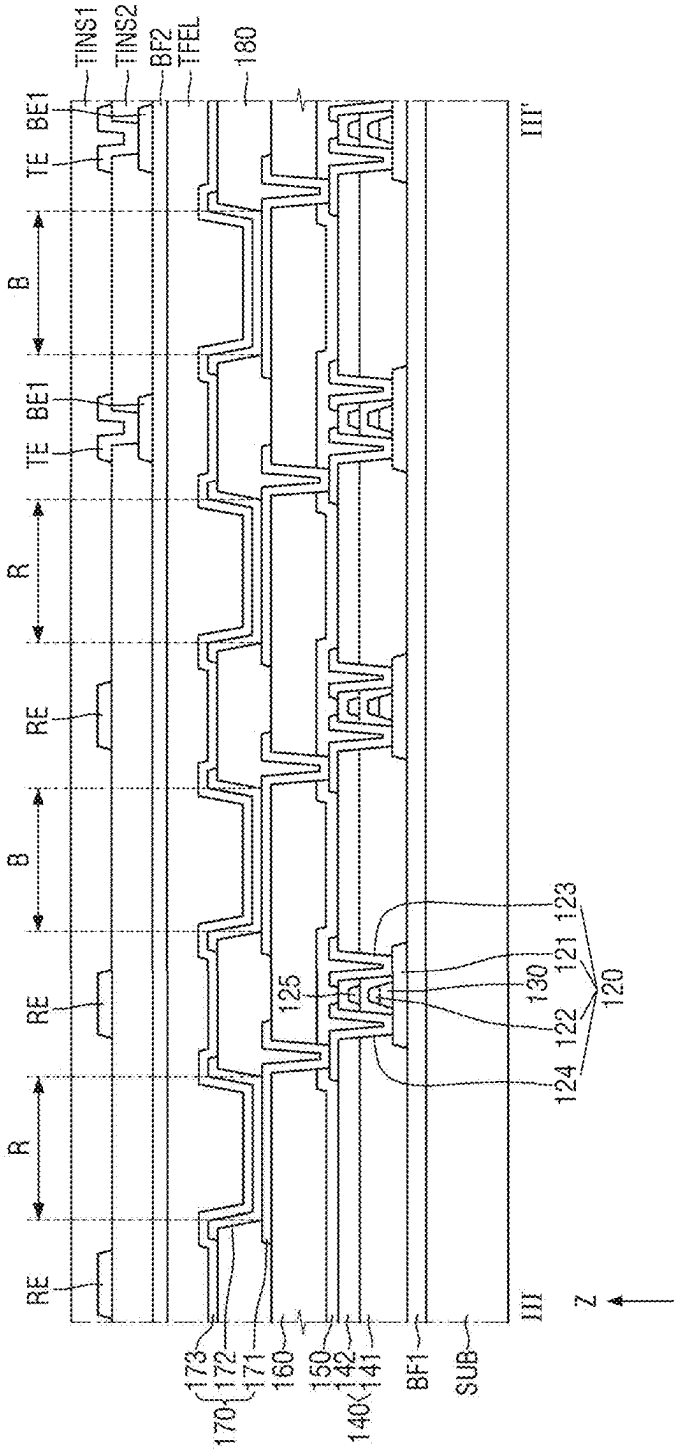
TINS1
TINS2
BF2
TFEL
180
BE1
TE
B
BE1
TE
R
RE
B
RE
R
RE
III'
III
Z
173
172
171
170
160
150
142
141
140
BF1
SUB
125
123
121
130
122
124
120

FIG. 29

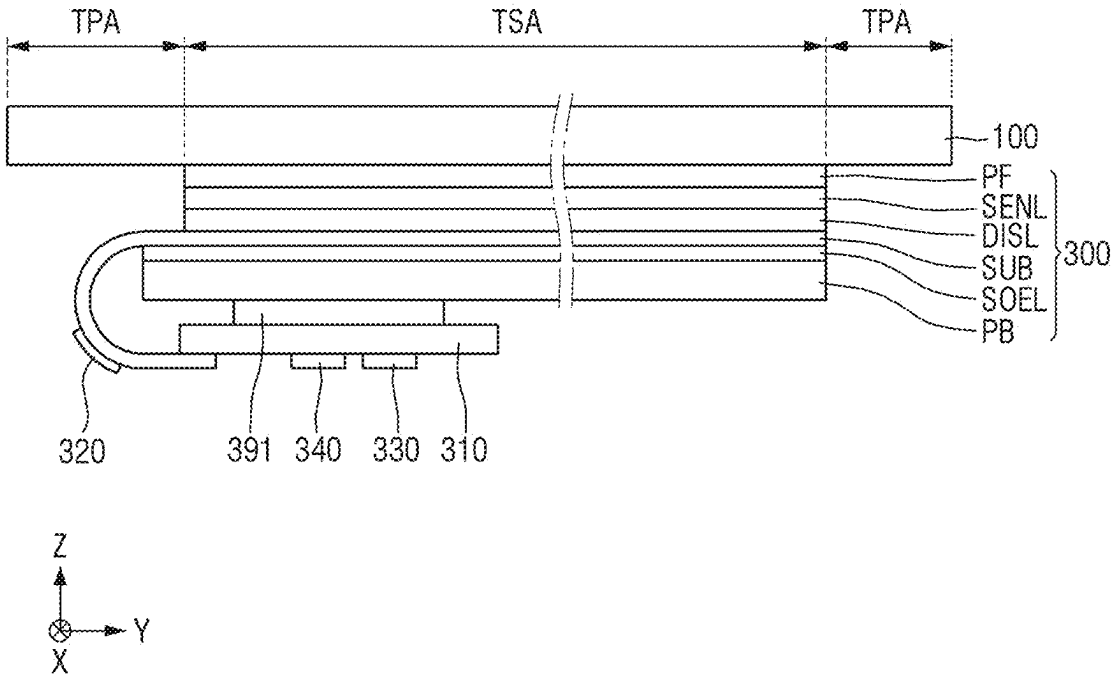
TPA
TSA
TPA
100
PF
SENL
DISL
SUB
SOEL
PB
300
320
391
340
330
310
Z
Y
X

FIG. 30

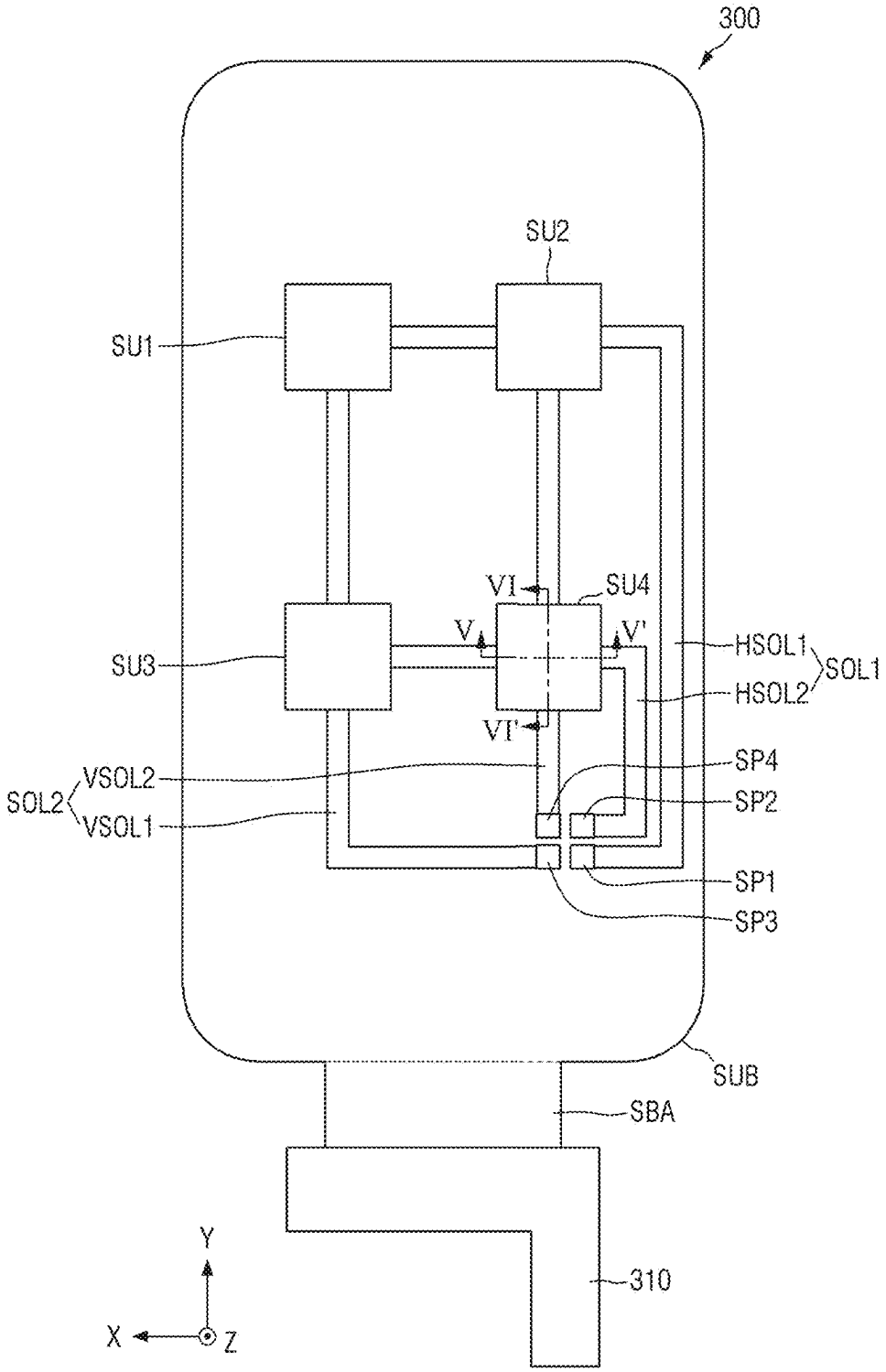
300
SU2
SU1
VI
SU4
V
V'
SU3
HSOL1
SOL1
HSOL2
VI'
SP4
VSOL2
SOL2
SP2
VSOL1
SP1
SP3
SUB
SBA
310
Y
X
Z

FIG. 31

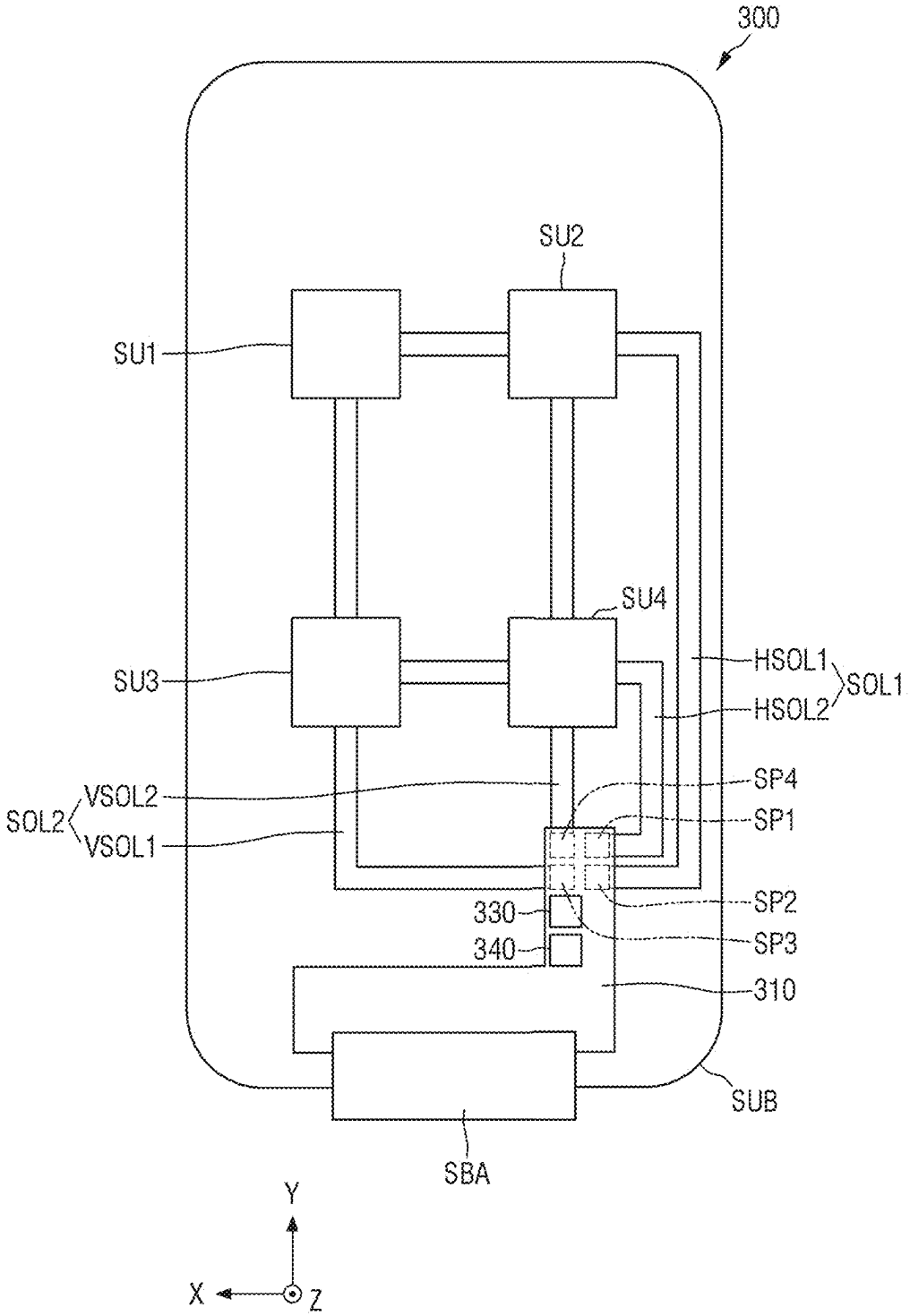
300
SU2
SU1
SU4
SU3
HSOL1
SOL1
HSOL2
SP4
VSOL2
SOL2
VSOL1
SP1
SP2
330
SP3
340
310
SUB
SBA
Y
X
Z

FIG. 32

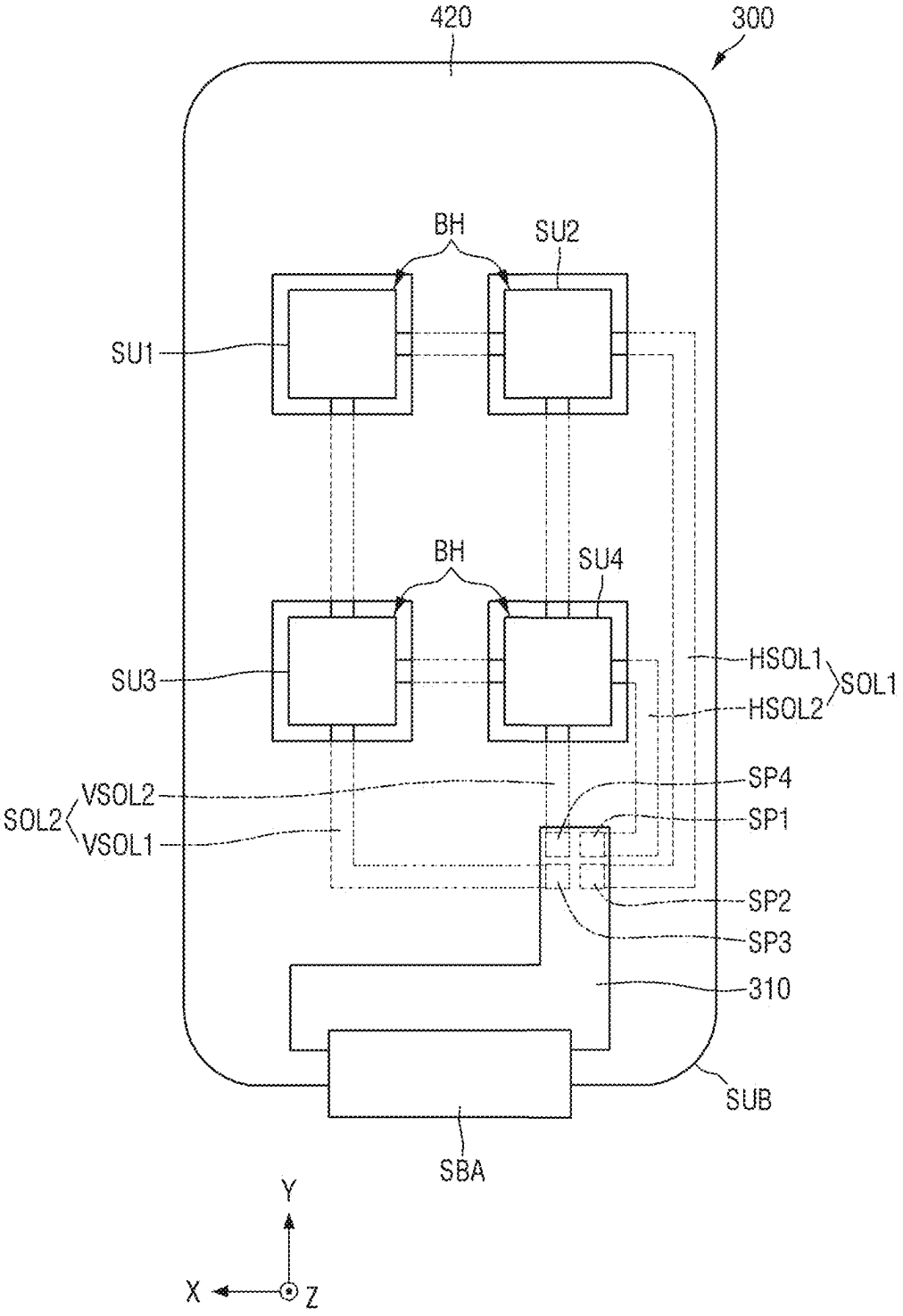
420
300
BH
SU2
SU1
BH
SU4
SU3
HSOL1
SOL1
HSOL2
SP4
VSOL2
SOL2
VSOL1
SP1
SP2
SP3
310
SUB
SBA
Y
X
Z

FIG. 33

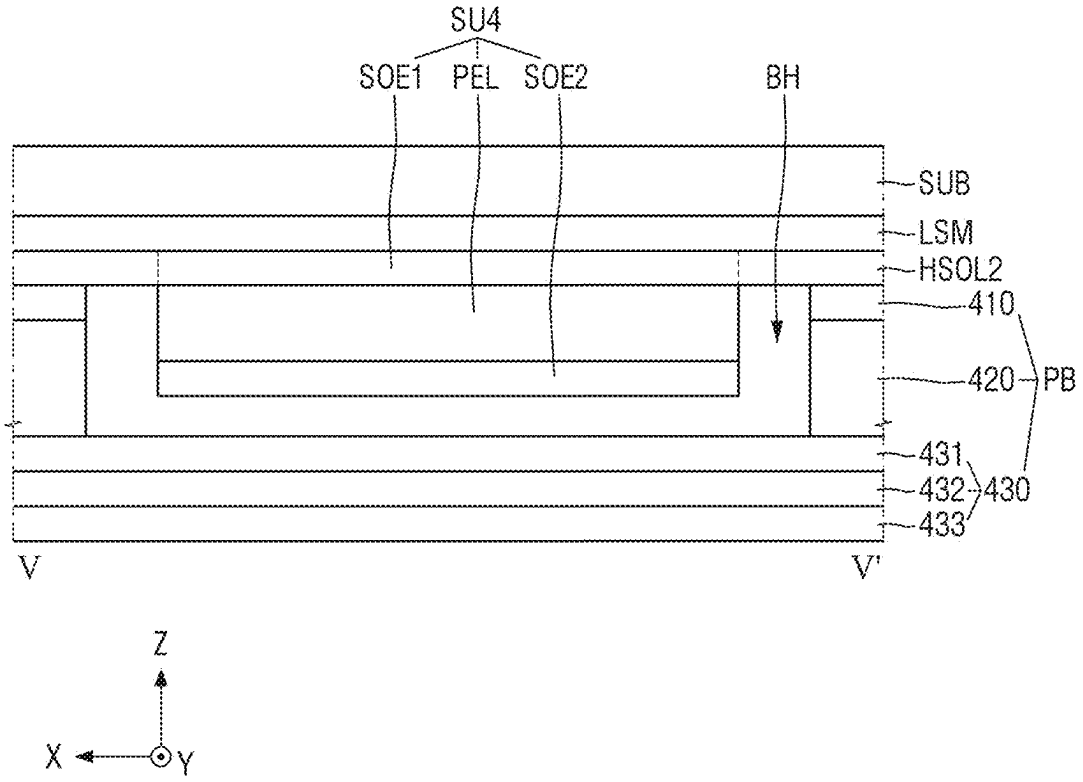
SU4
SOE1
PEL
SOE2
BH
SUB
LSM
HSOL2
410
420
PB
431
432
430
433
V
V'
Z
X
Y

FIG. 34

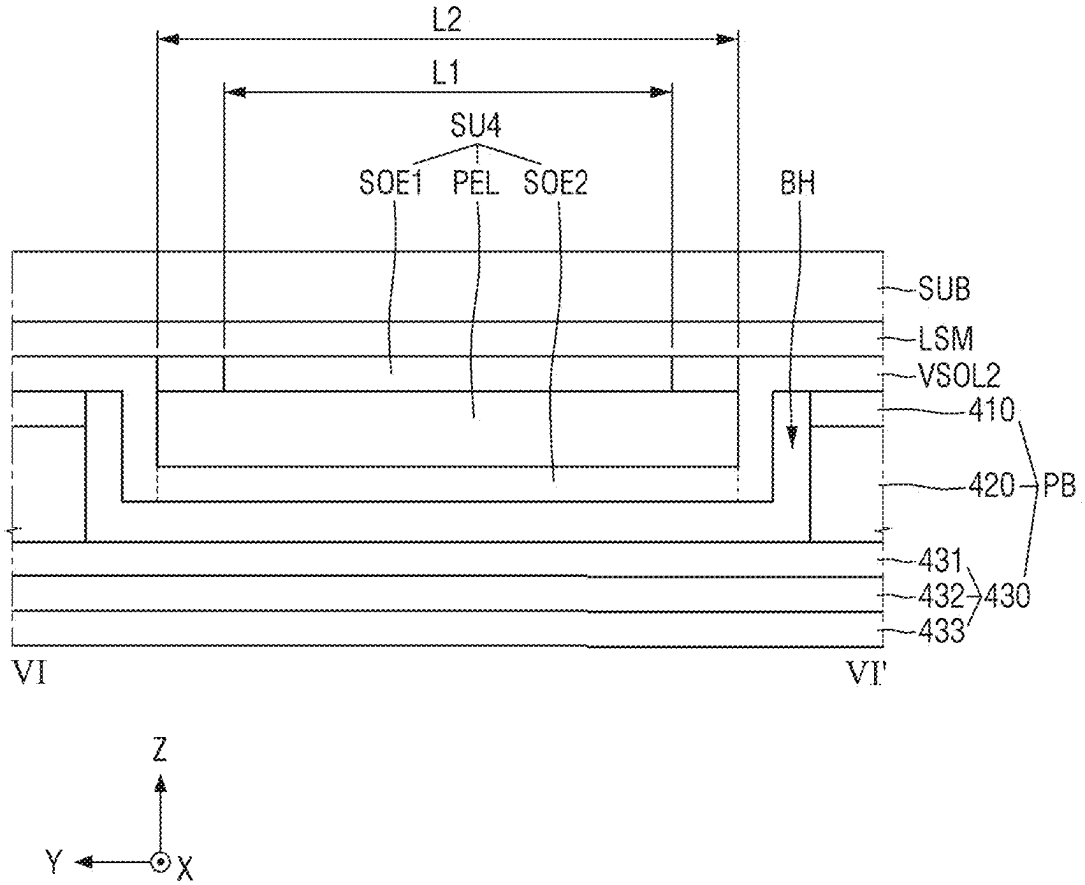
L2
L1
SU4
SOE1
PEL
SOE2
BH
SUB
LSM
VSOL2
410
420
PB
431
432
430
433
VI
VI'
Z
Y
X

FIG. 35

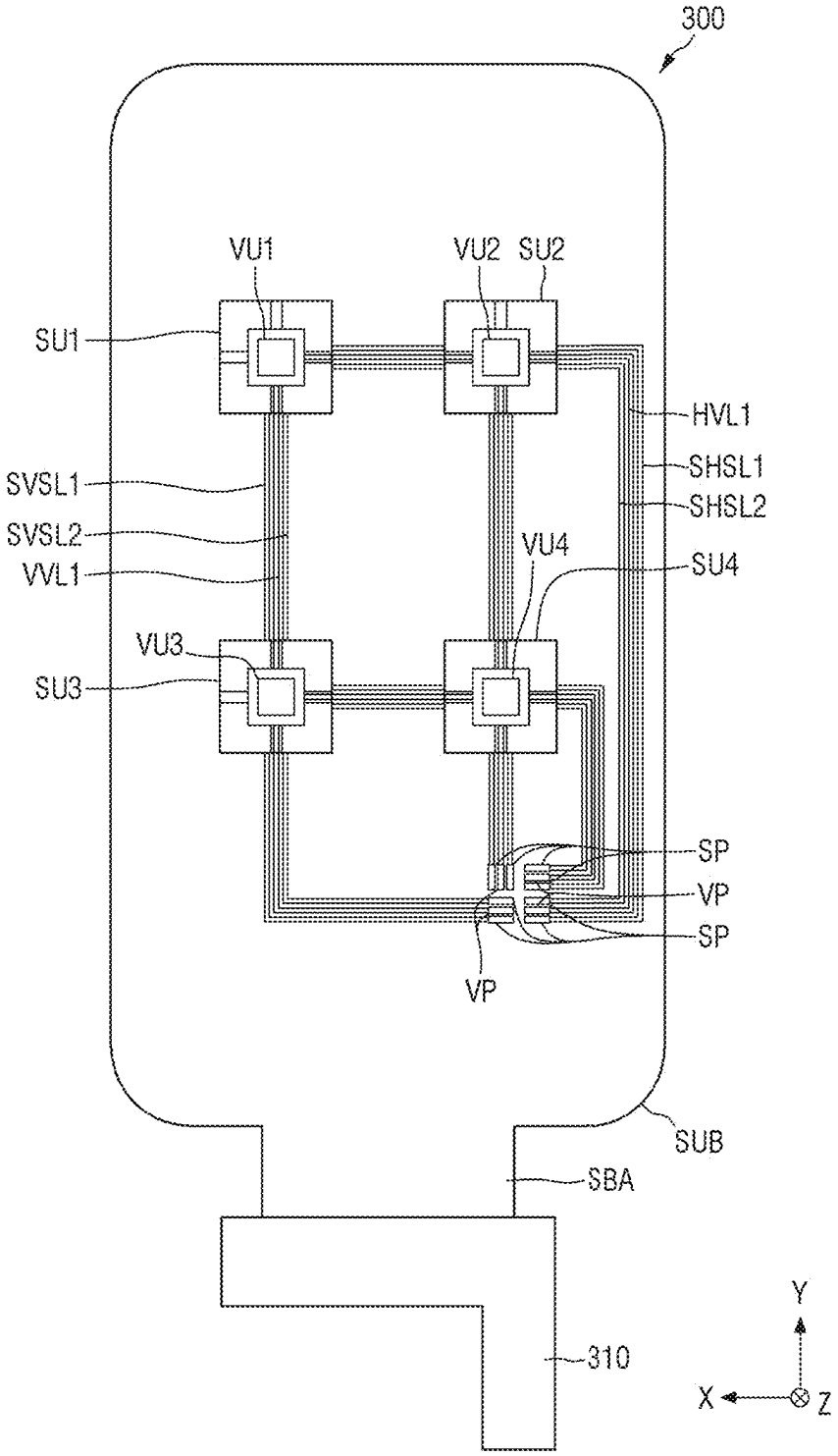
300
VU1
VU2
SU2
SU1
HVL1
SHSL1
SHSL2
SVSL1
SVSL2
VVL1
VU4
SU4
VU3
SU3
SP
VP
SP
VP
SUB
SBA
310
Y
X
Z

FIG. 36

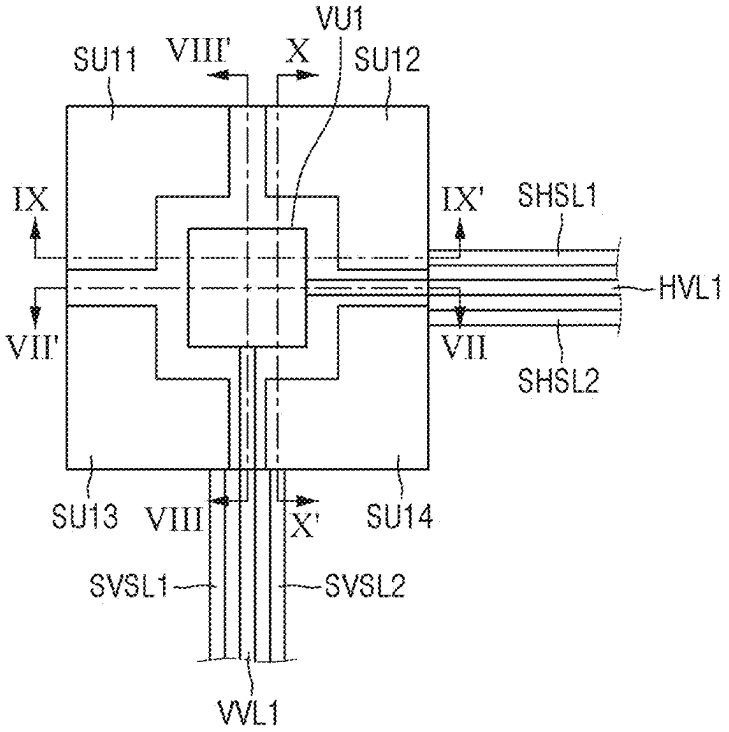

SU1 : SU11, SU12, SU13, SU14

FIG. 37

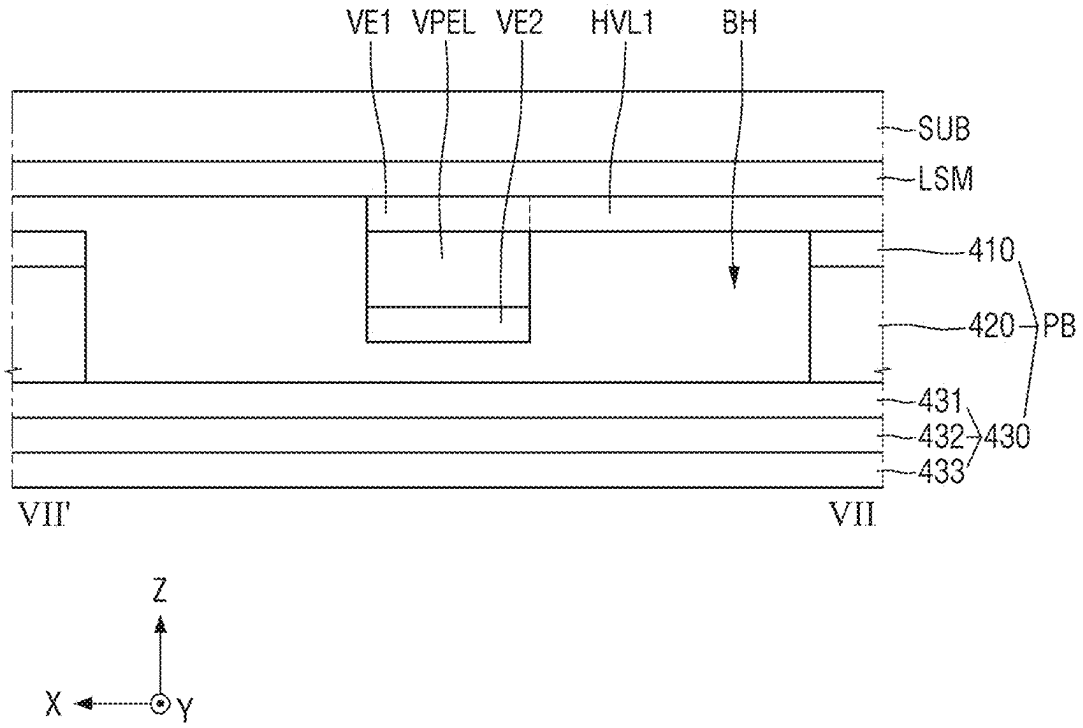
VE1
VPEL
VE2
HVL1
BH
SUB
LSM
410
420
PB
431
432
430
433
VII'
VII
Z
X
Y

FIG. 38

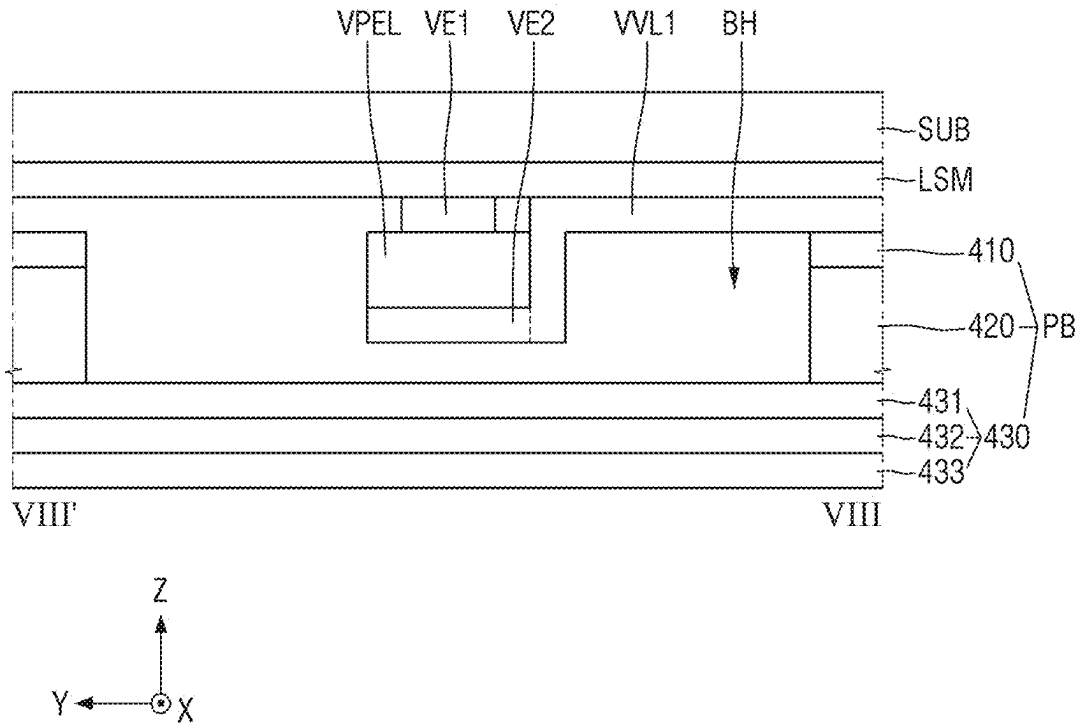
VPEL
VE1
VE2
WL1
BH
SUB
LSM
410
420
PB
431
432
430
433
VIII'
VIII
Z
Y
X

FIG. 39

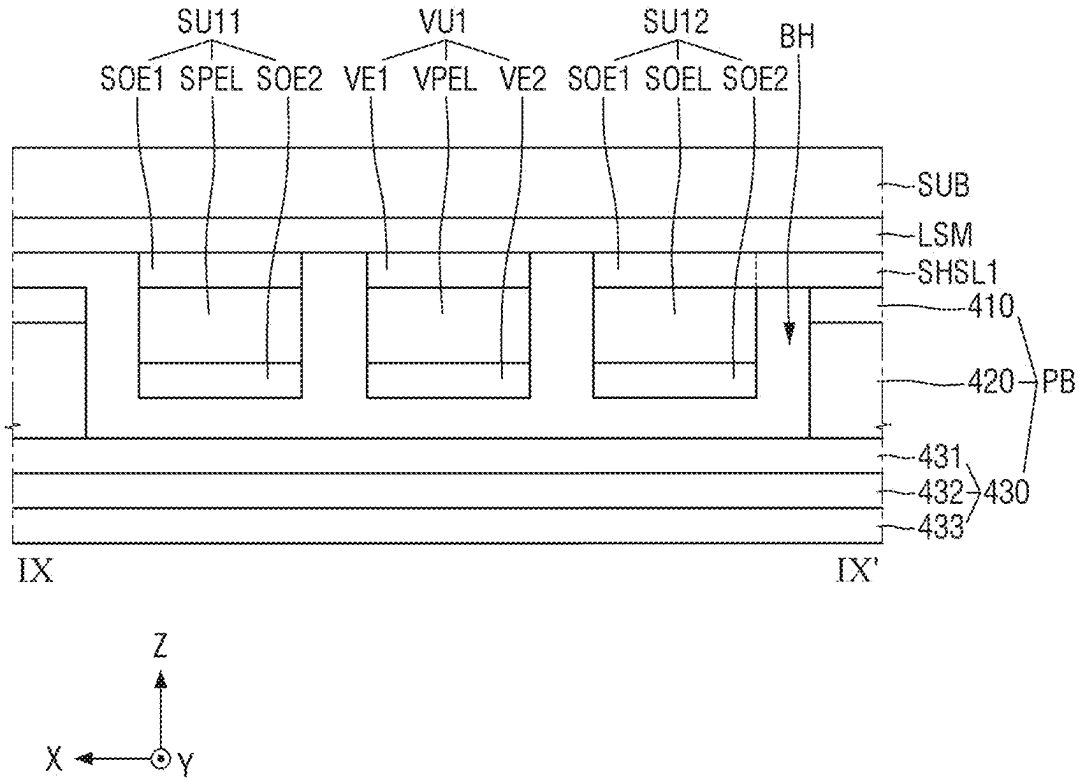
SU11
VU1
SU12
BH
SOE1 SPEL SOE2 VE1 VPEL VE2 SOE1 SOEL SOE2
SUB
LSM
SHSL1
410
420
PB
431
432
430
433
IX
IX'
Z
X
Y

FIG. 40

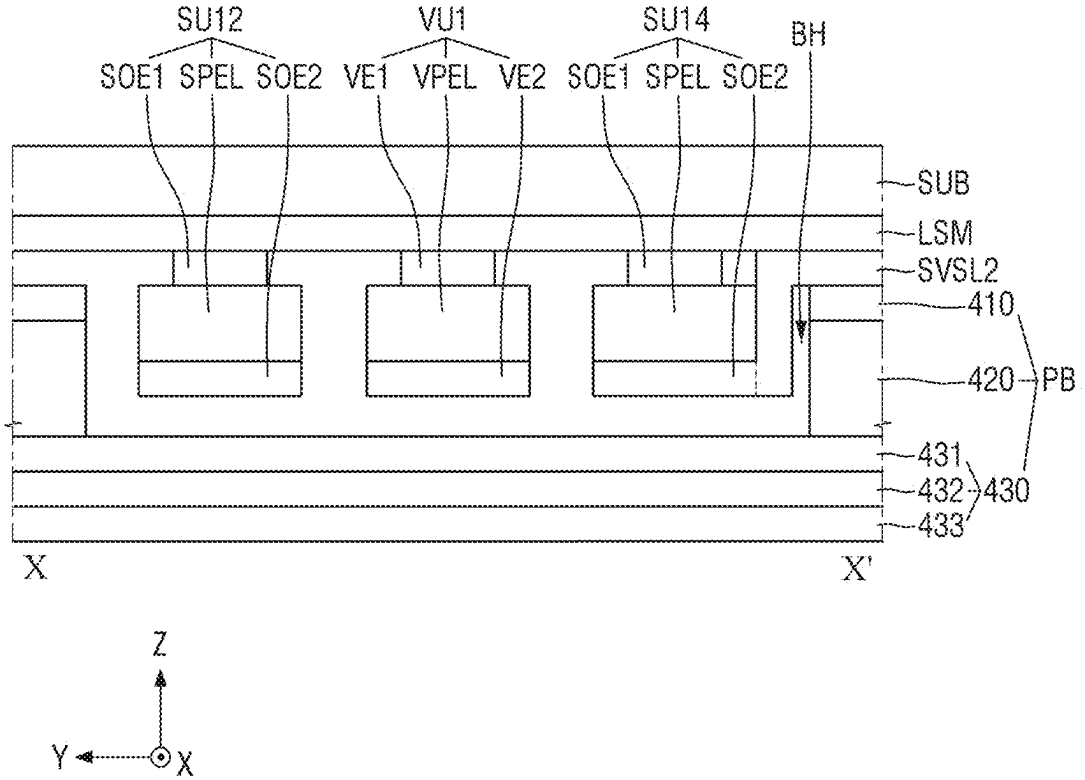
SU12
VU1
SU14
BH
SOE1 SPEL SOE2 VE1 VPEL VE2 SOE1 SPEL SOE2
SUB
LSM
SVSL2
410
420
PB
431
432
430
433
X
X'
Z
Y
X

FIG. 41

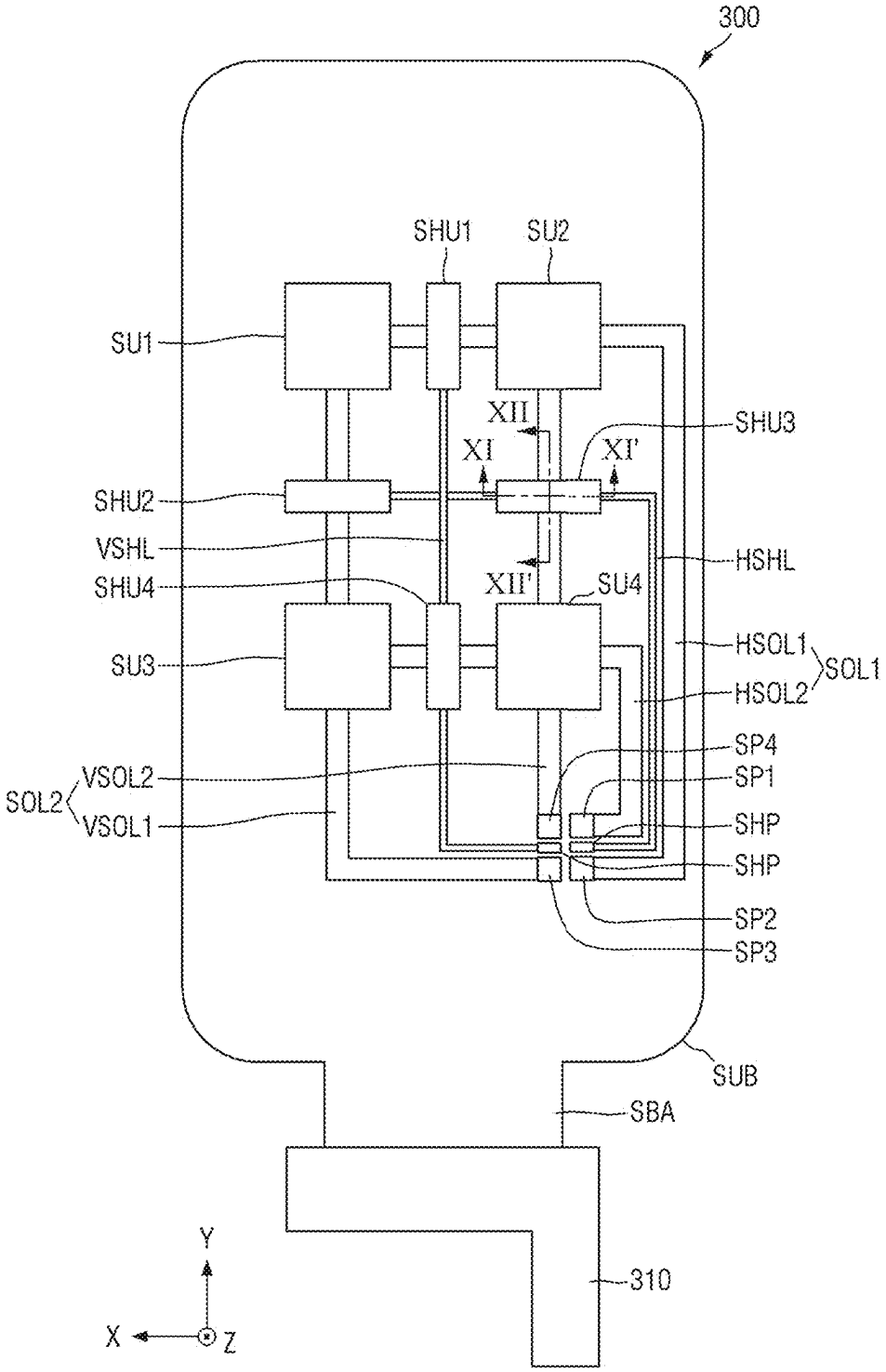
300
SHU1
SU2
SU1
XII
XI
XI'
SHU3
SHU2
VSHL
HSHL
SHU4
XII'
SU4
SU3
HSOL1
SOL1
HSOL2
SP4
VSOL2
SP1
SOL2
VSOL1
SHP
SHP
SP2
SP3
SUB
SBA
310
Y
X
Z

FIG. 42

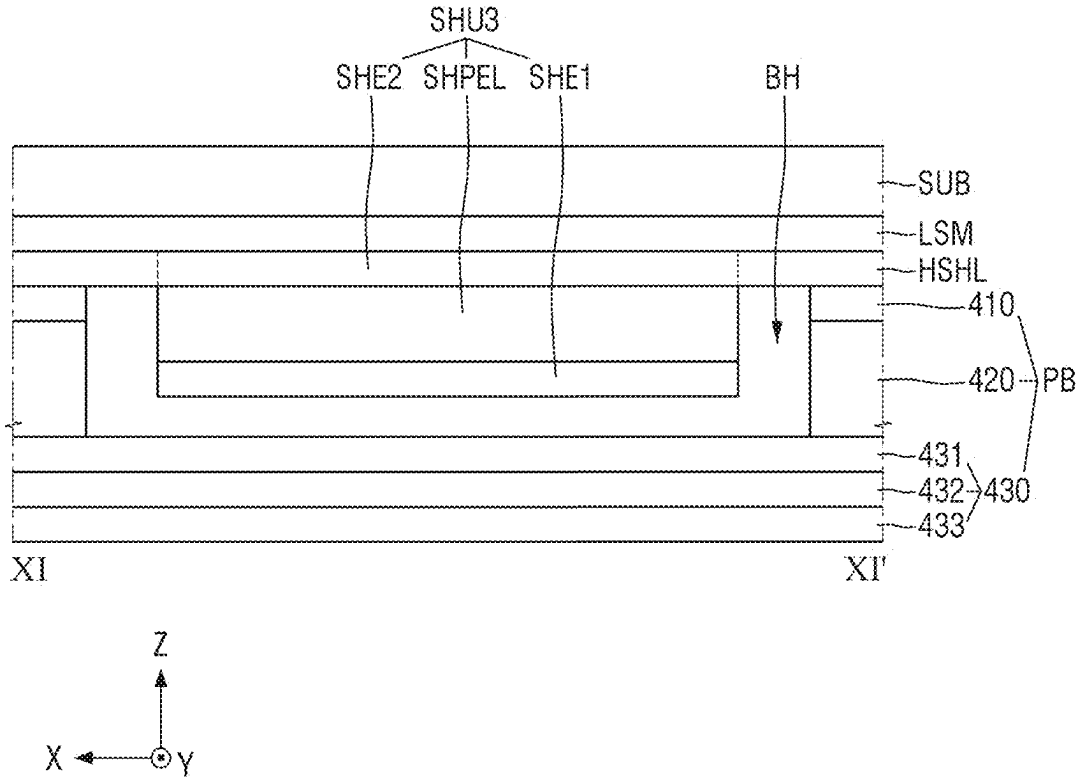
SHU3
SHE2
SHPEL
SHE1
BH
SUB
LSM
HSHL
410
420
PB
431
432
430
433
XI
XI'
Z
X
Y

FIG. 43

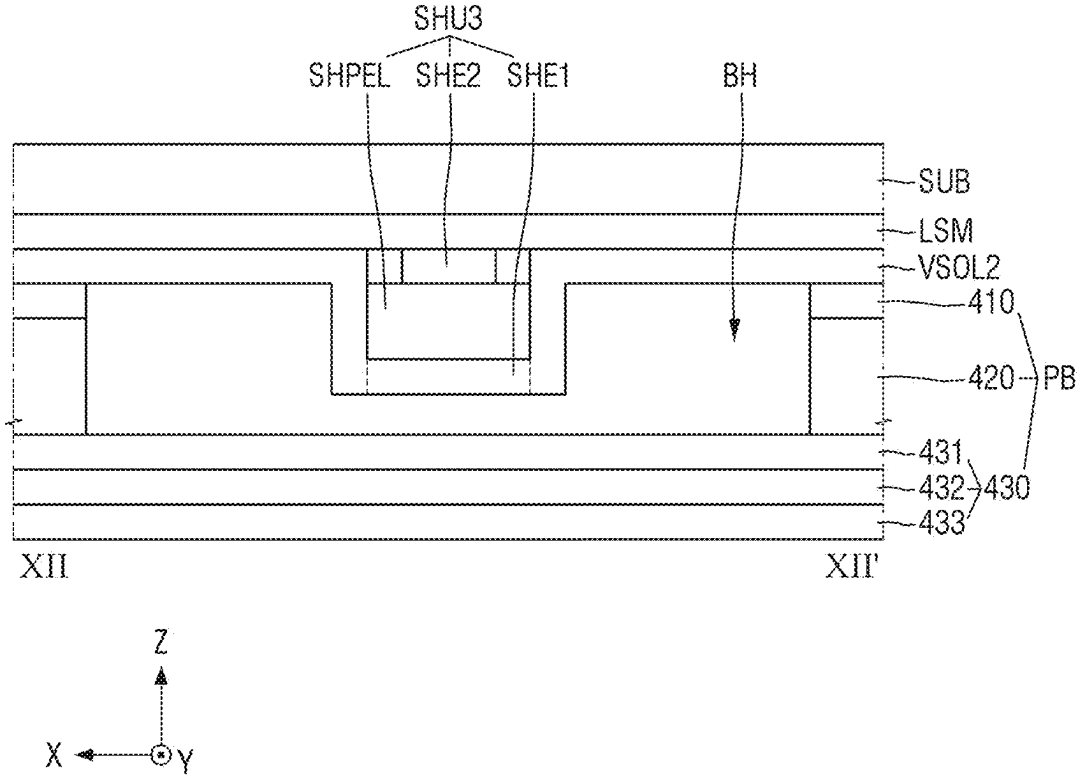
SHU3
SHPEL
SHE2
SHE1
BH
SUB
LSM
VSOL2
410
420
PB
431
432
430
433
XII
XII'
Z
X
Y

FIG. 44

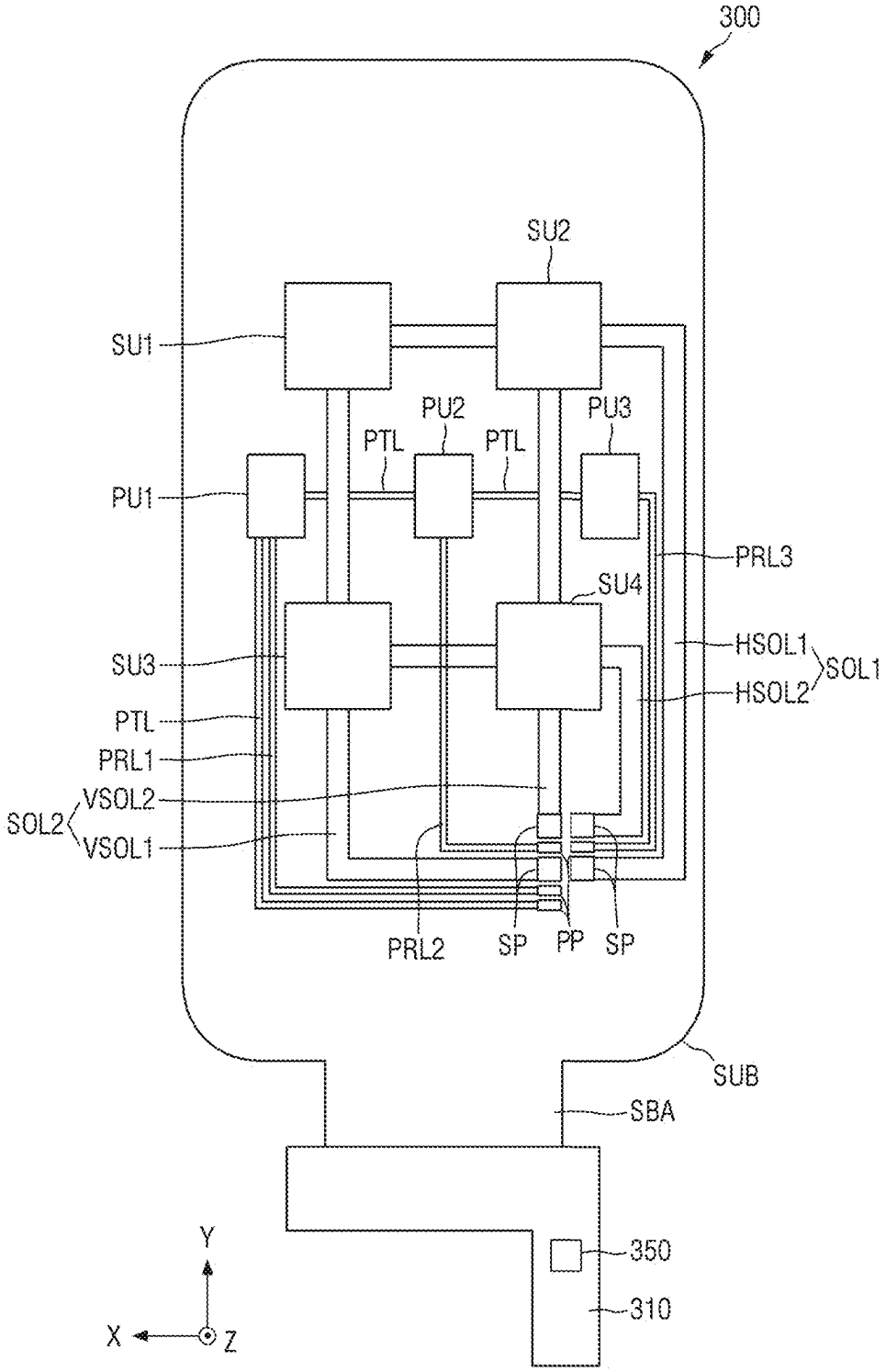
300
SU2
SU1
PU2
PU3
PTL
PTL
PU1
PRL3
SU4
SU3
HSOL1
SOL1
HSOL2
PTL
PRL1
VSOL2
SOL2
VSOL1
PRL2
SP
PP
SP
SUB
SBA
350
310
Y
X
Z

FIG. 45

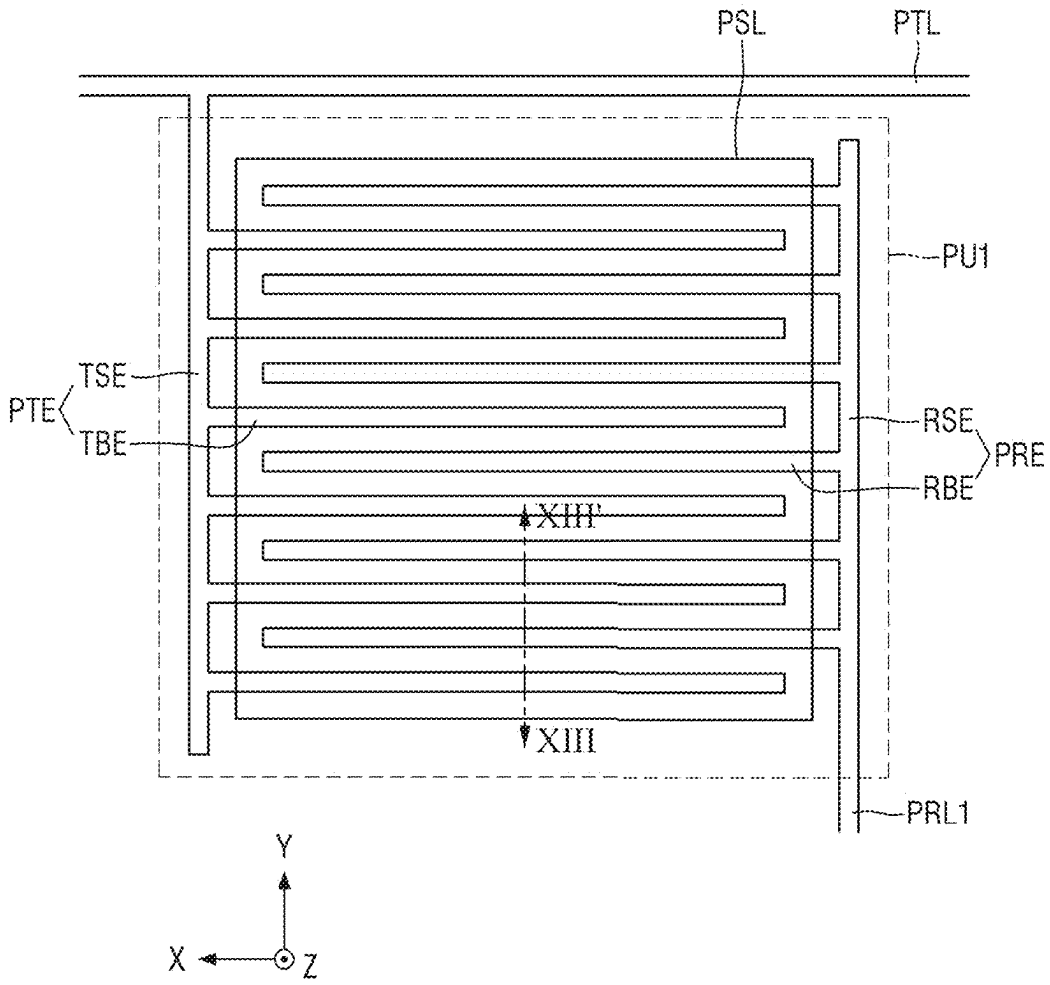

FIG. 46

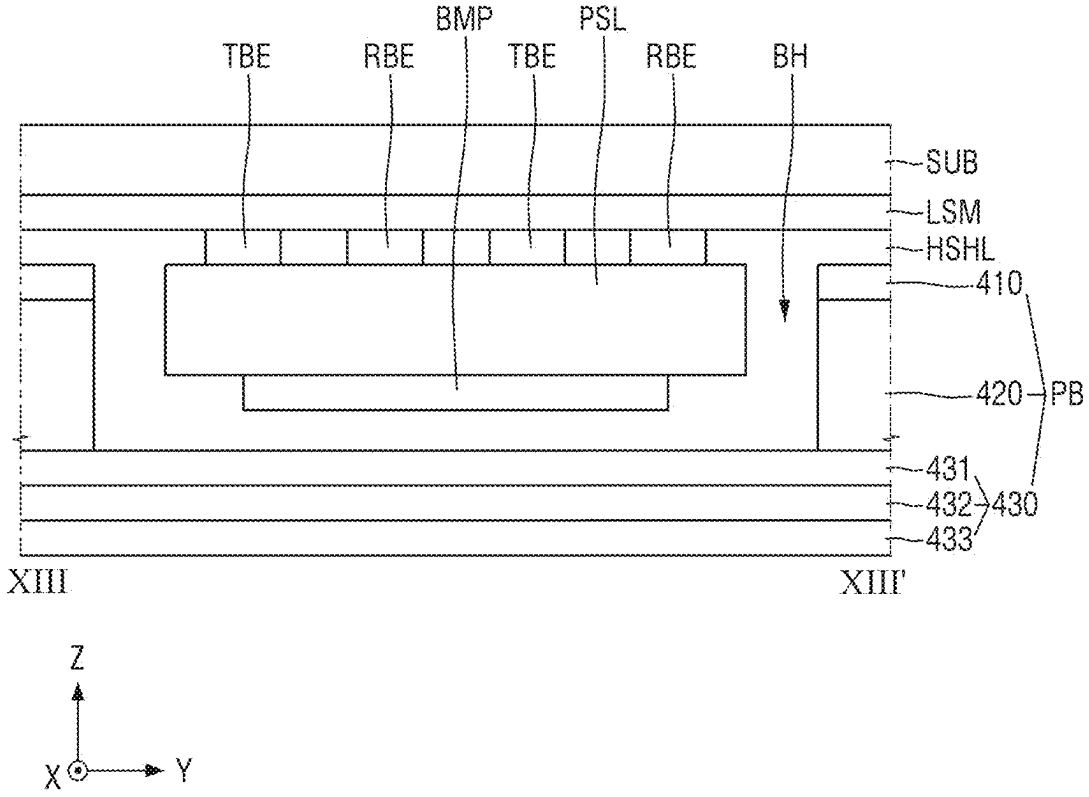
BMP
PSL
TBE
RBE
TBE
RBE
BH
SUB
LSM
HSHL
410
420
PB
431
432
430
433
XIII
XIII'
Z
X
Y

FIG. 47

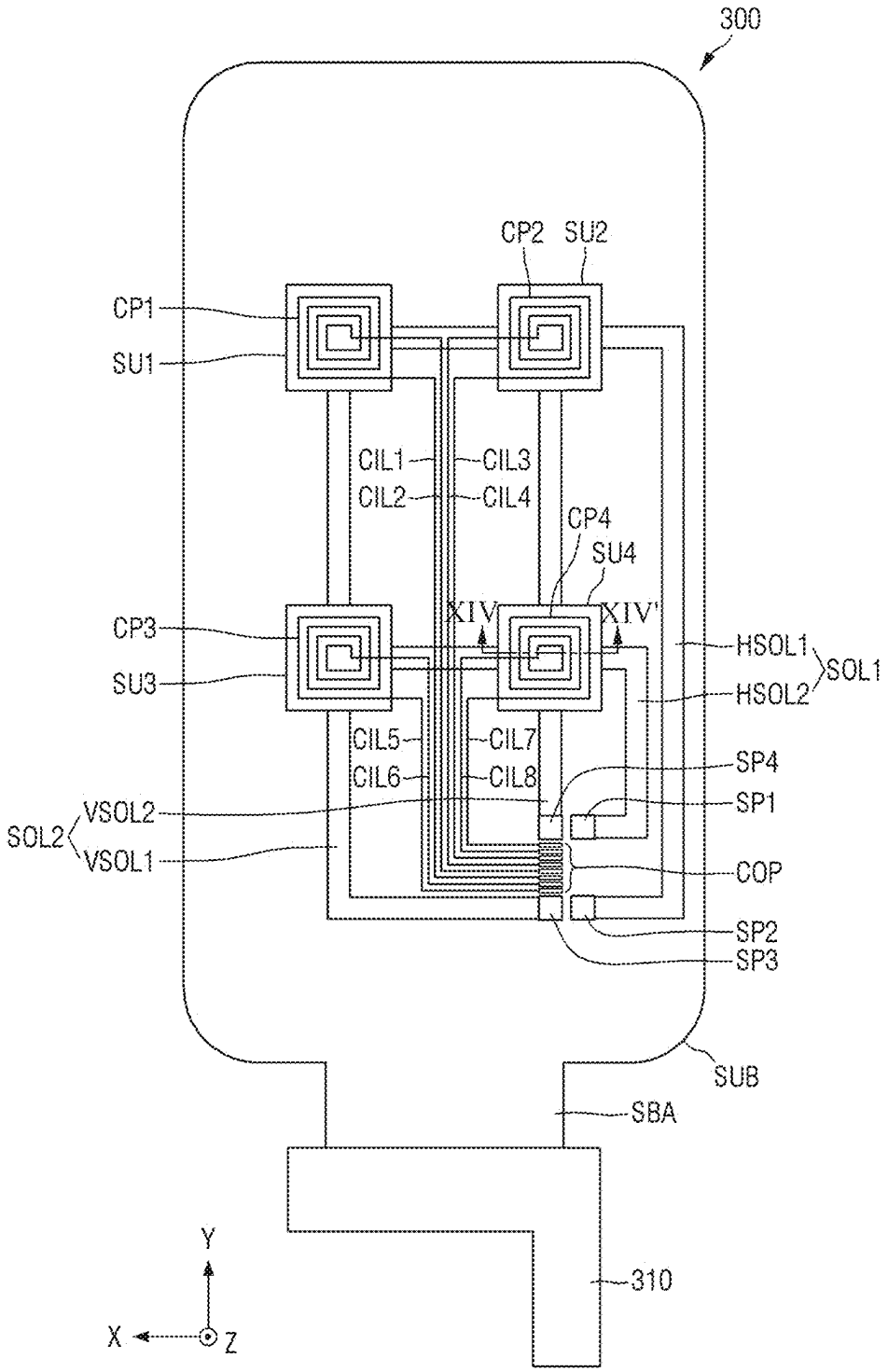
300
CP2
SU2
CP1
SU1
CIL1
CIL3
CIL2
CIL4
CP4
SU4
XIV
XIV'
CP3
SU3
HSOL1
SOL1
HSOL2
CIL5
CIL7
CIL6
CIL8
SP4
SP1
VSOL2
SOL2
VSOL1
COP
SP2
SP3
SUB
SBA
310
Y
X
Z

FIG. 48

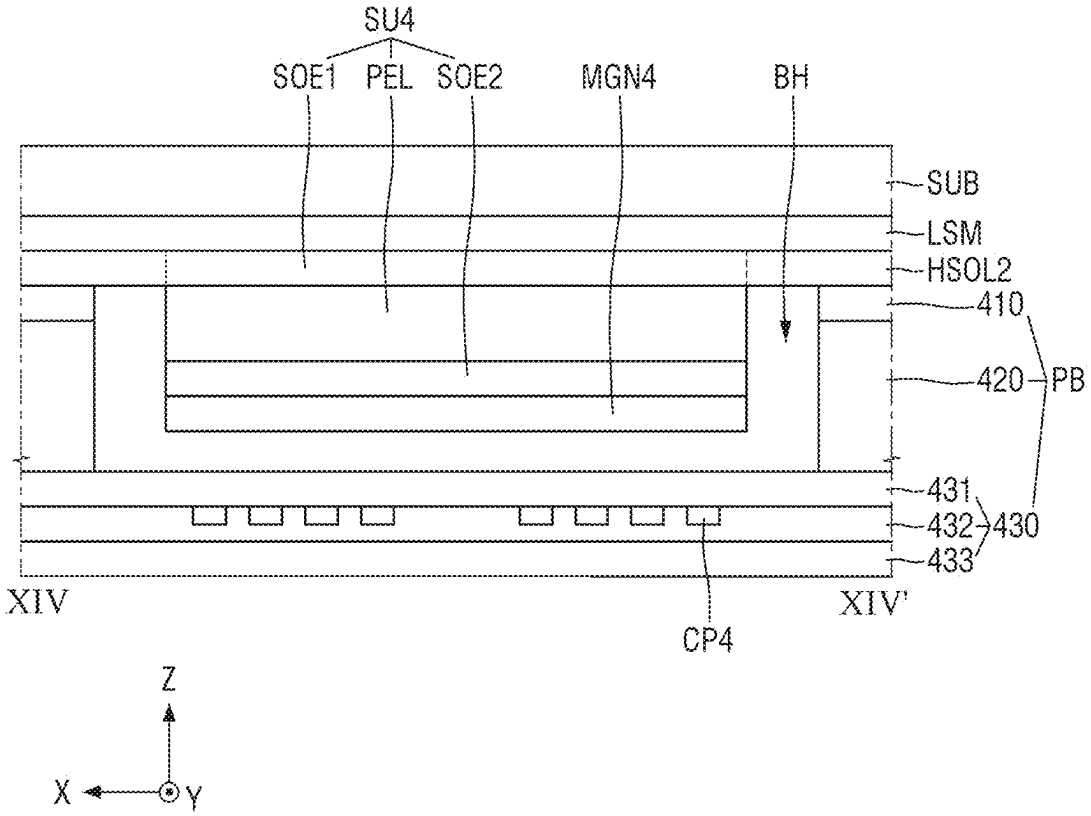
SU4
SOE1
PEL
SOE2
MGN4
BH
SUB
LSM
HSOL2
410
420
PB
431
432
430
433
XIV
XIV'
CP4
Z
X
Y

FIG. 49

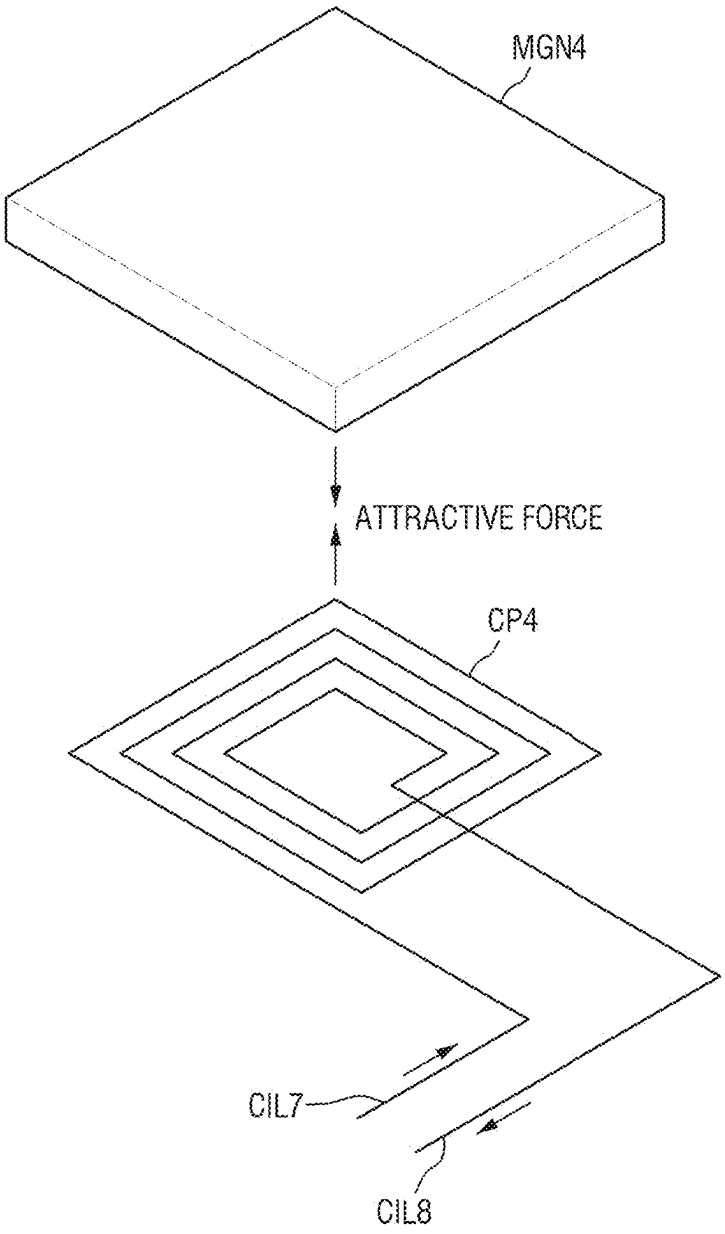

FIG. 50

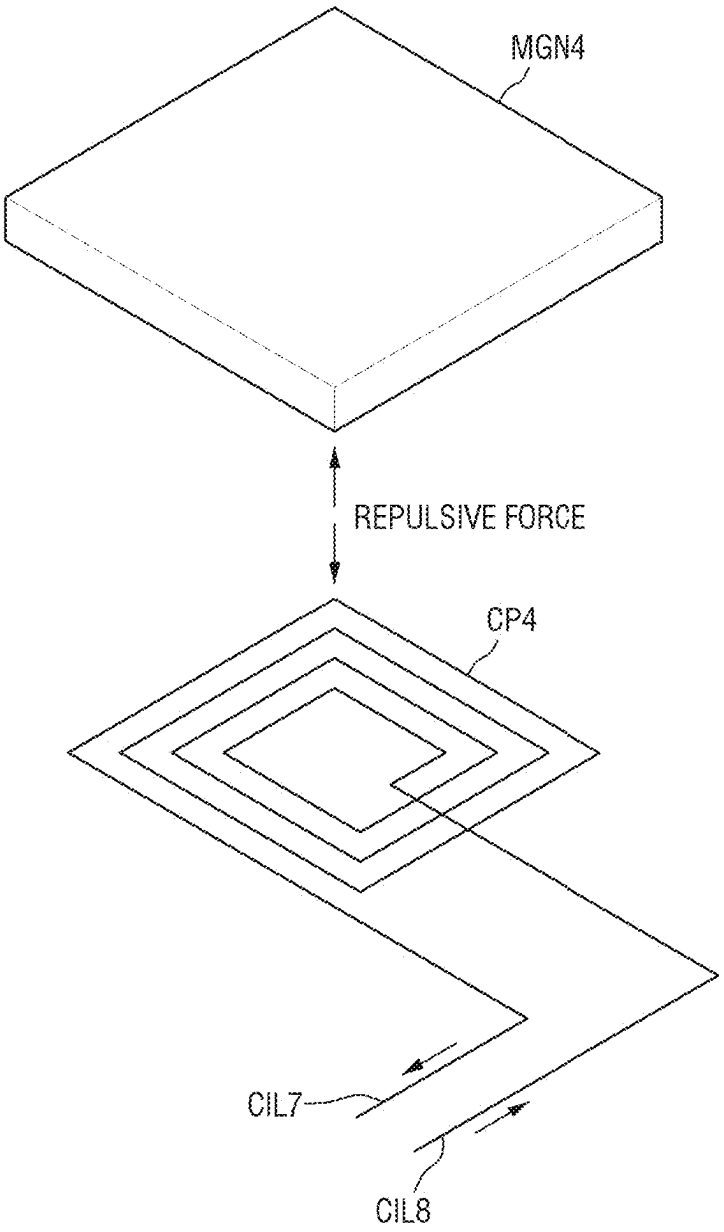

FIG. 51

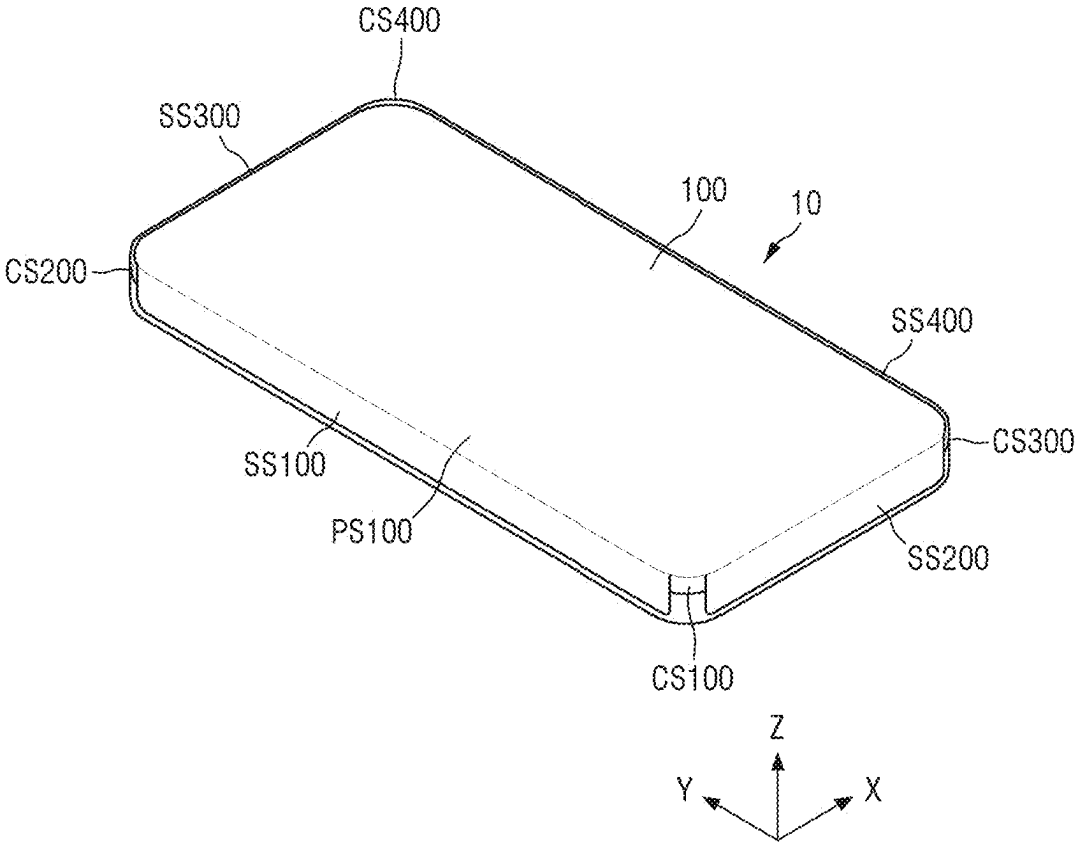
CS400
SS300
100
10
CS200
SS400
CS300
SS100
PS100
SS200
CS100
Z
Y
X

FIG. 52

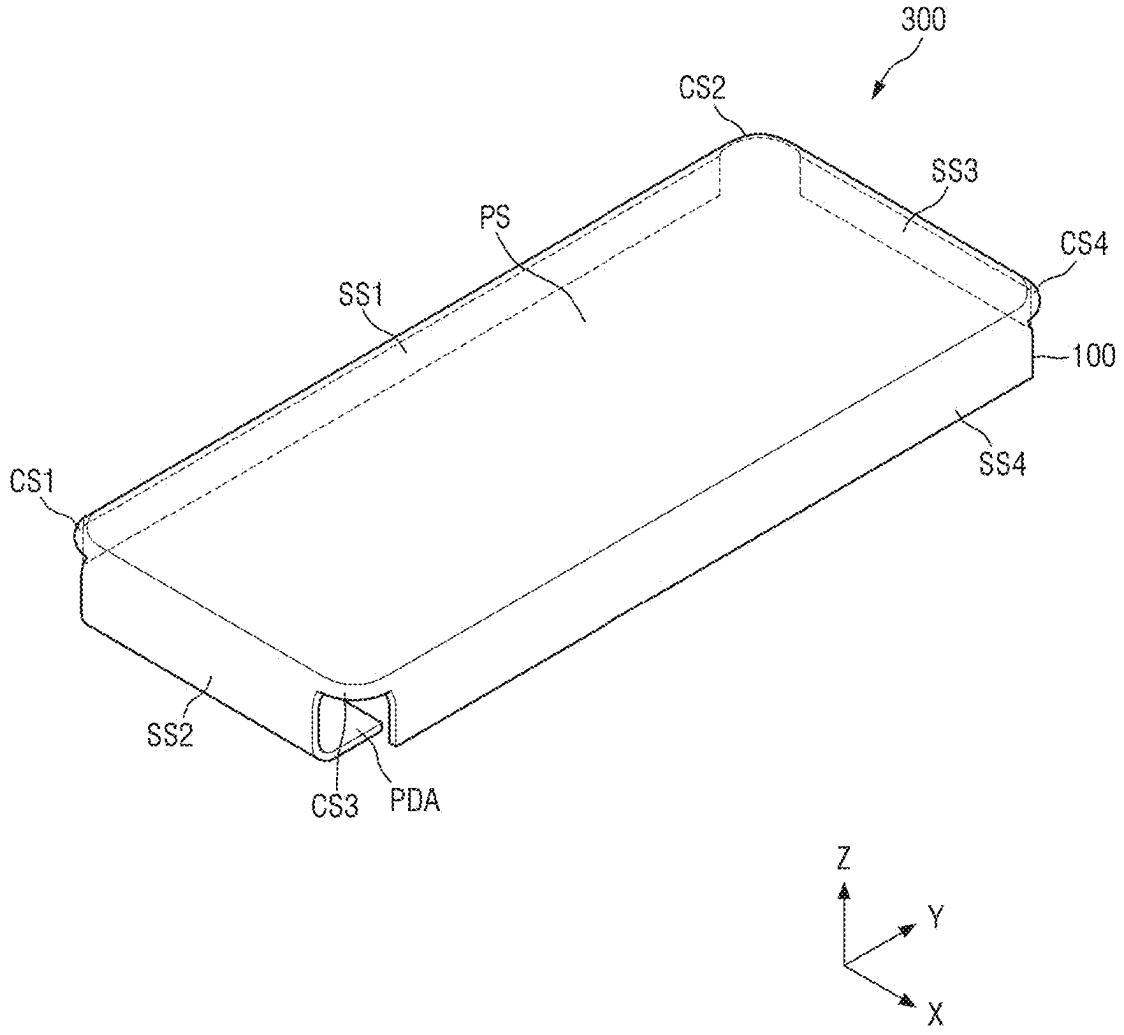

FIG. 53

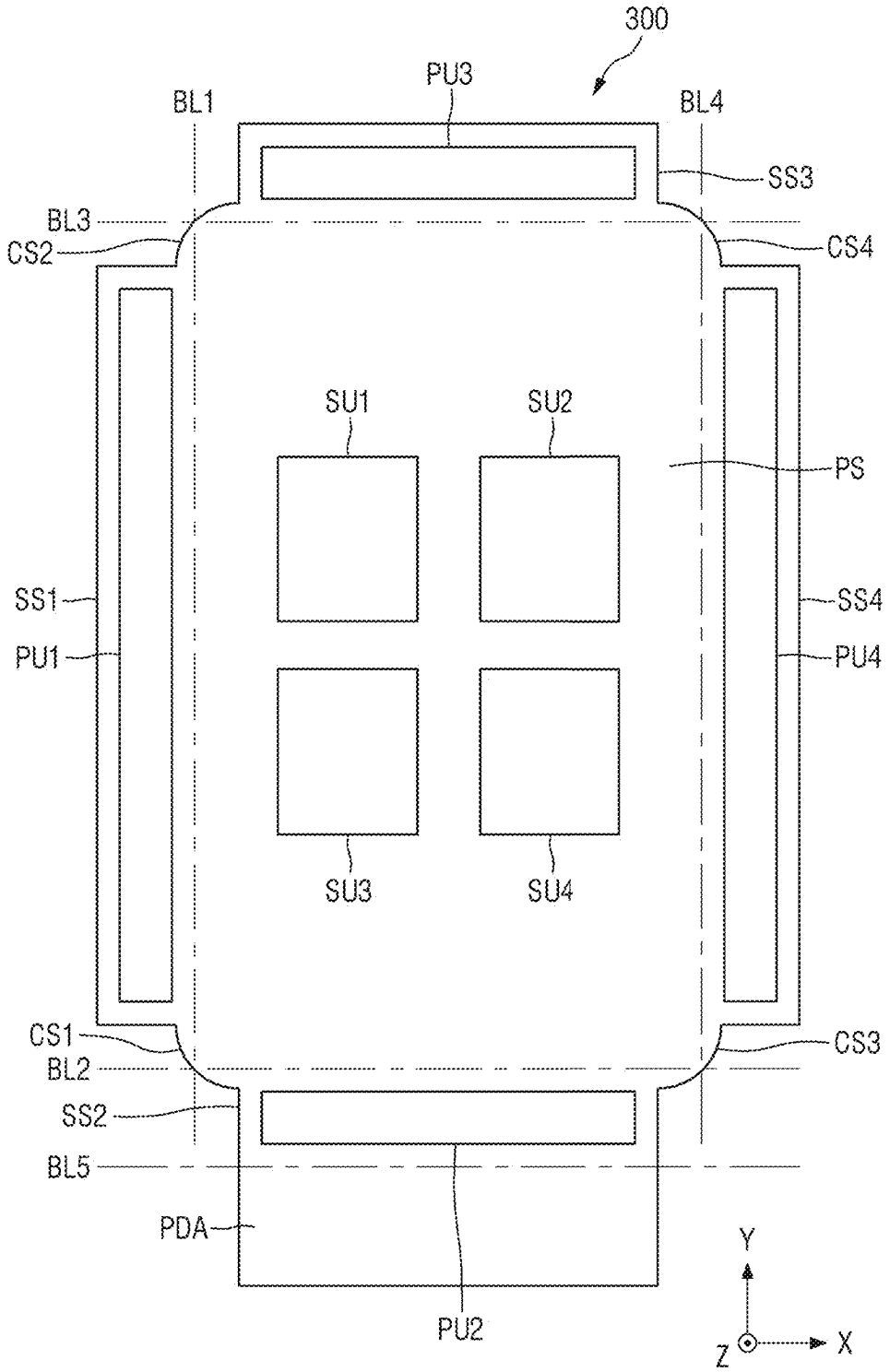
300
PU3
BL1
BL4
SS3
BL3
CS2
CS4
SU1
SU2
PS
SS1
SS4
PU1
PU4
SU3
SU4
CS1
CS3
BL2
SS2
BL5
PDA
PU2
Y
Z
X

FIG. 54

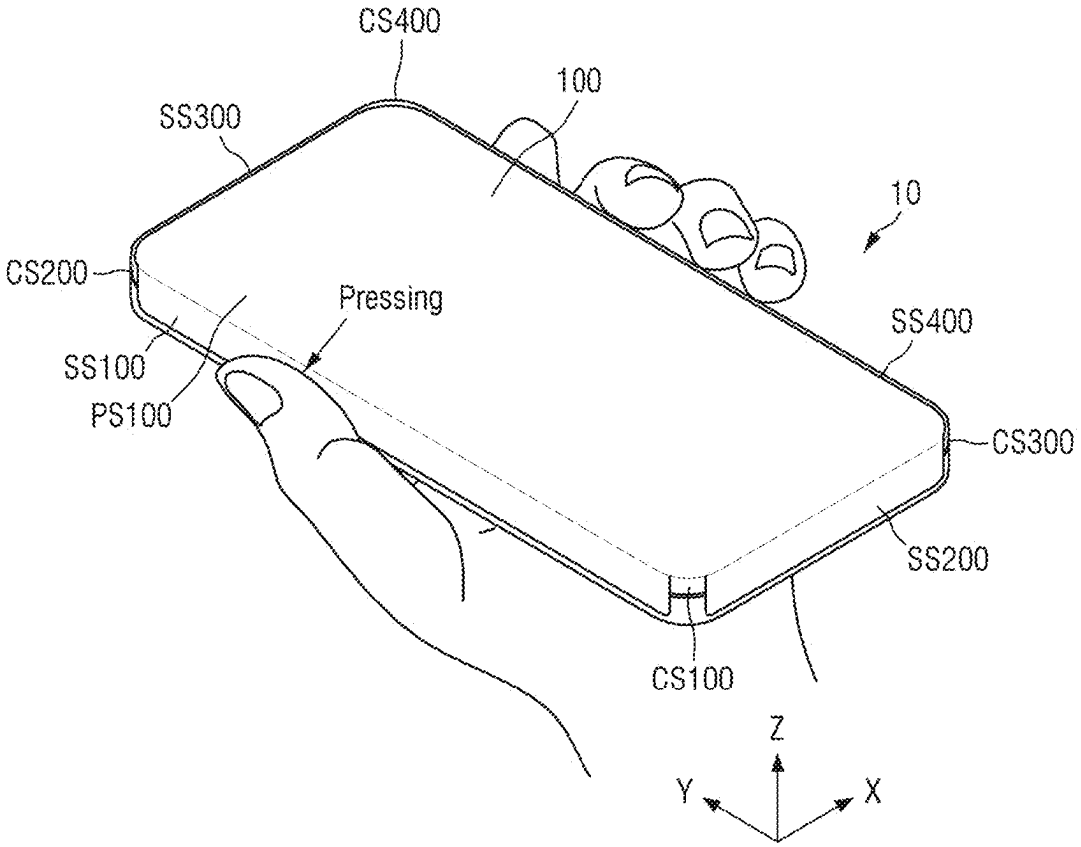
CS400
100
SS300
10
CS200
Pressing
SS400
SS100
PS100
CS300
SS200
CS100
Z
Y
X

FIG. 55

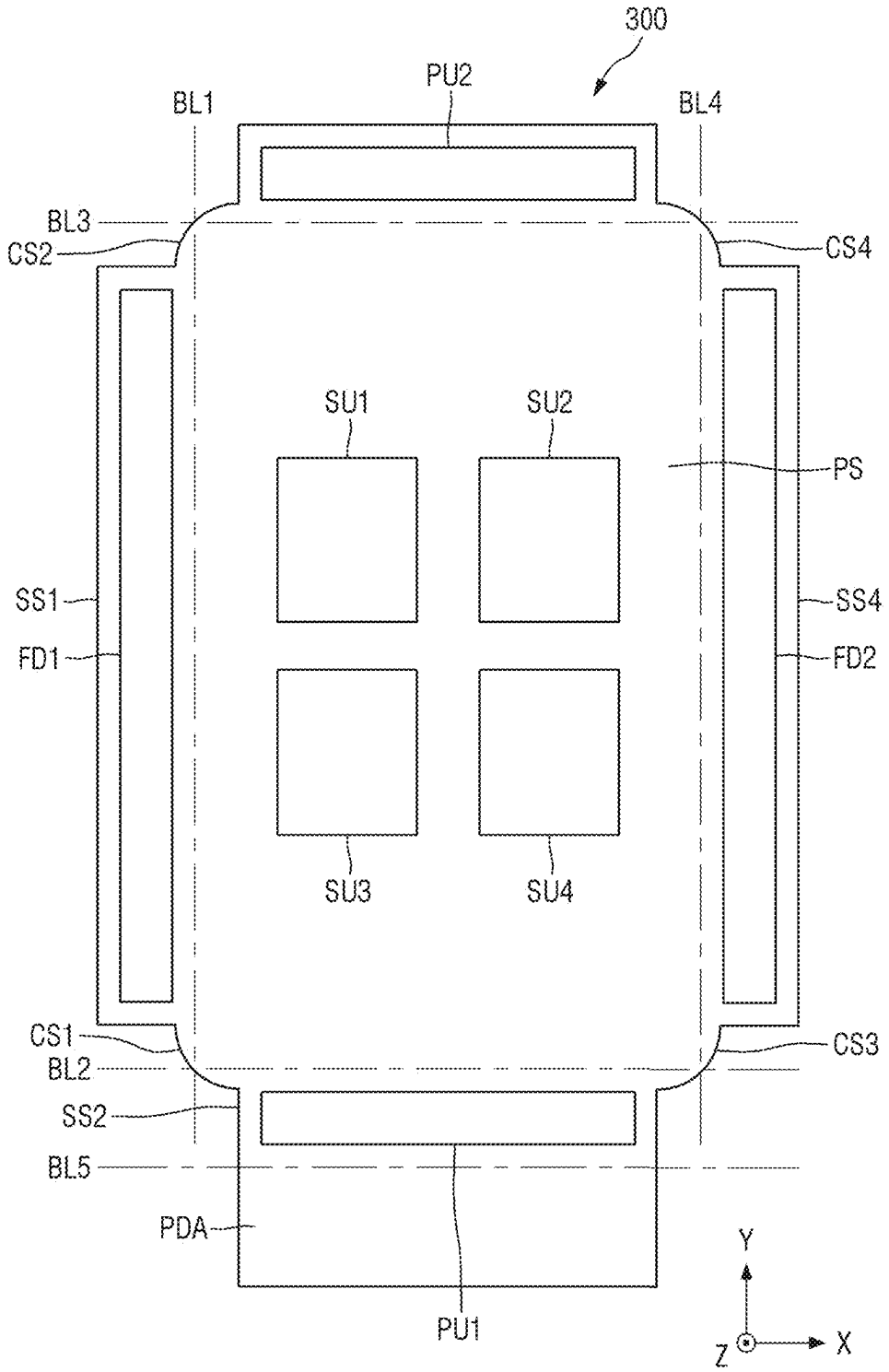
300
PU2
BL1
BL4
BL3
CS2
CS4
SU1
SU2
PS
SS1
SS4
FD1
FD2
SU3
SU4
CS1
CS3
BL2
SS2
BL5
PDA
PU1
Y
Z
X

FIG. 56

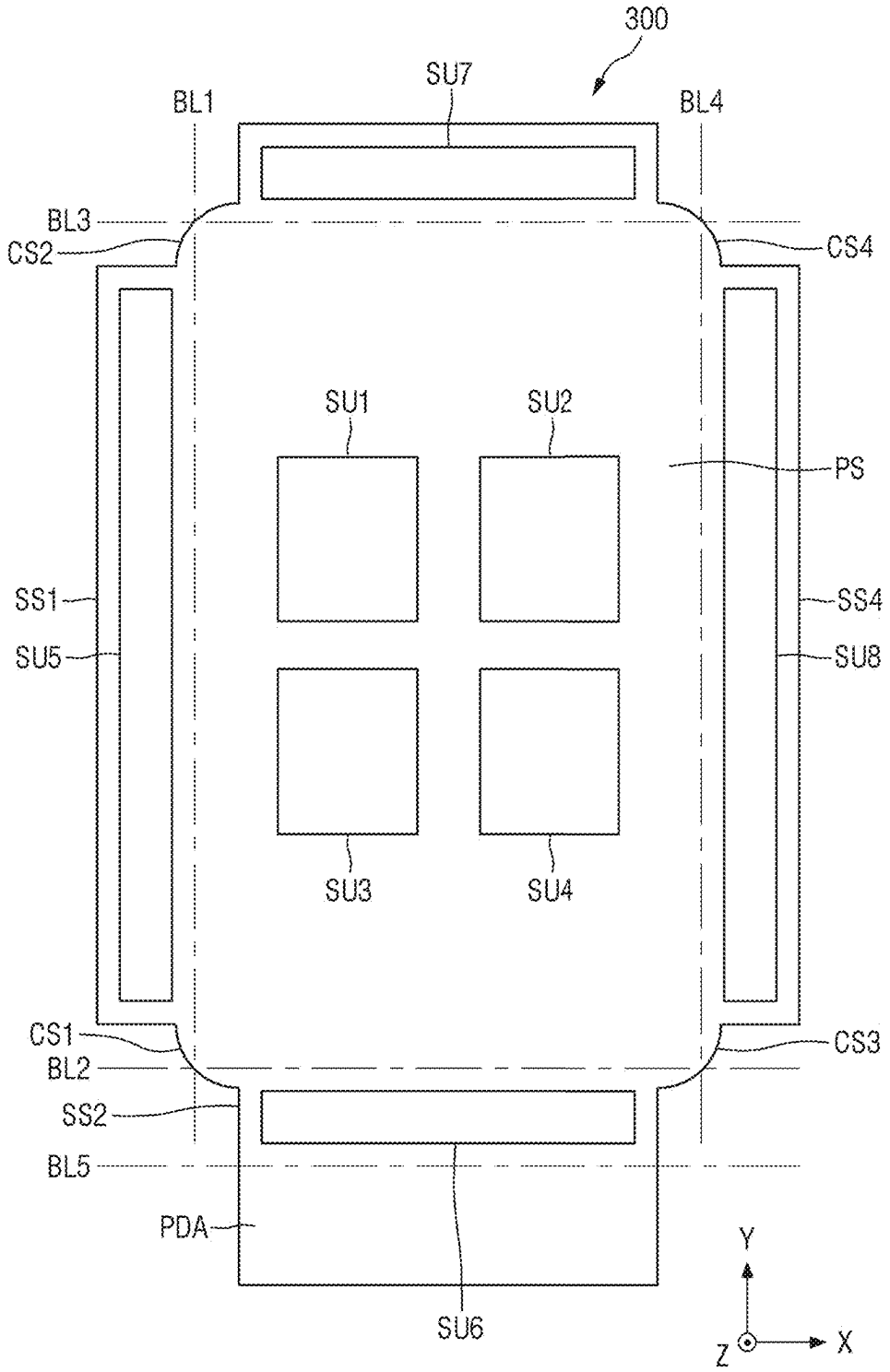
300
SU7
BL1
BL4
BL3
CS2
CS4
SU1
SU2
PS
SS1
SS4
SU5
SU8
SU3
SU4
CS1
CS3
BL2
SS2
BL5
PDA
SU6
Y
Z
X

FIG. 57

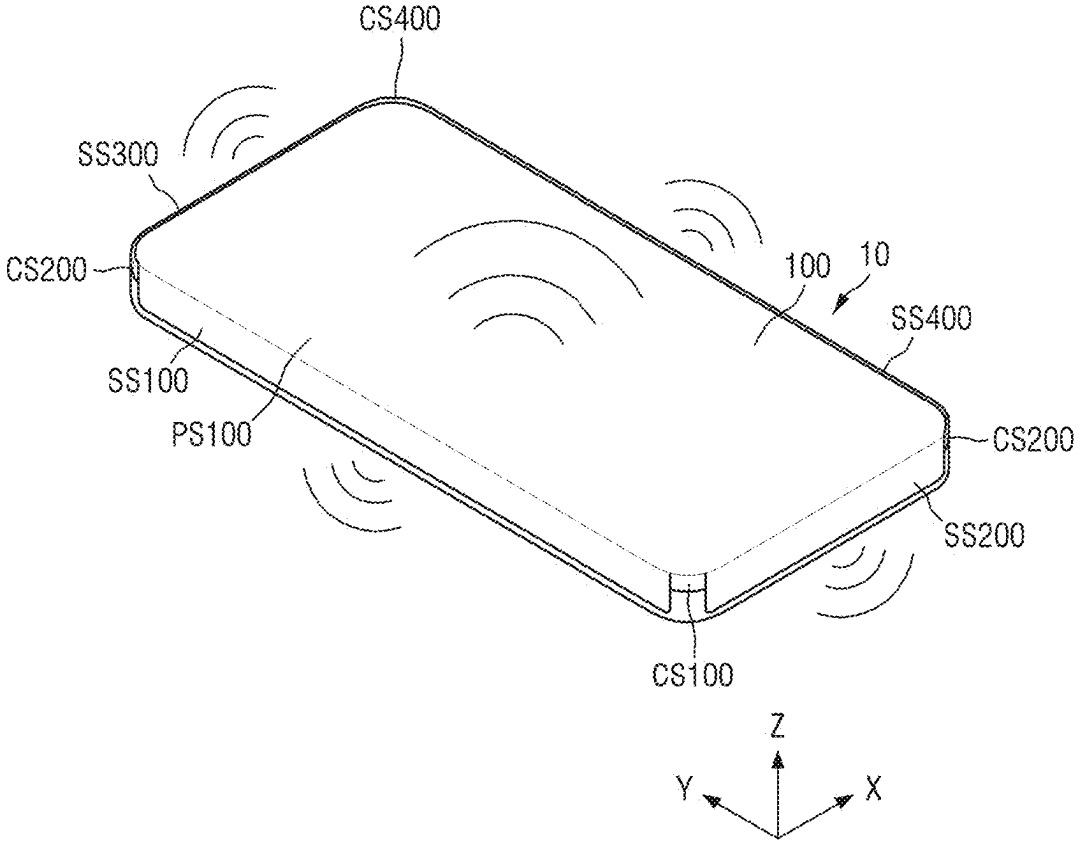
CS400
SS300
CS200
100
10
SS400
SS100
PS100
CS200
SS200
CS100
Z
Y
X

FIG. 58

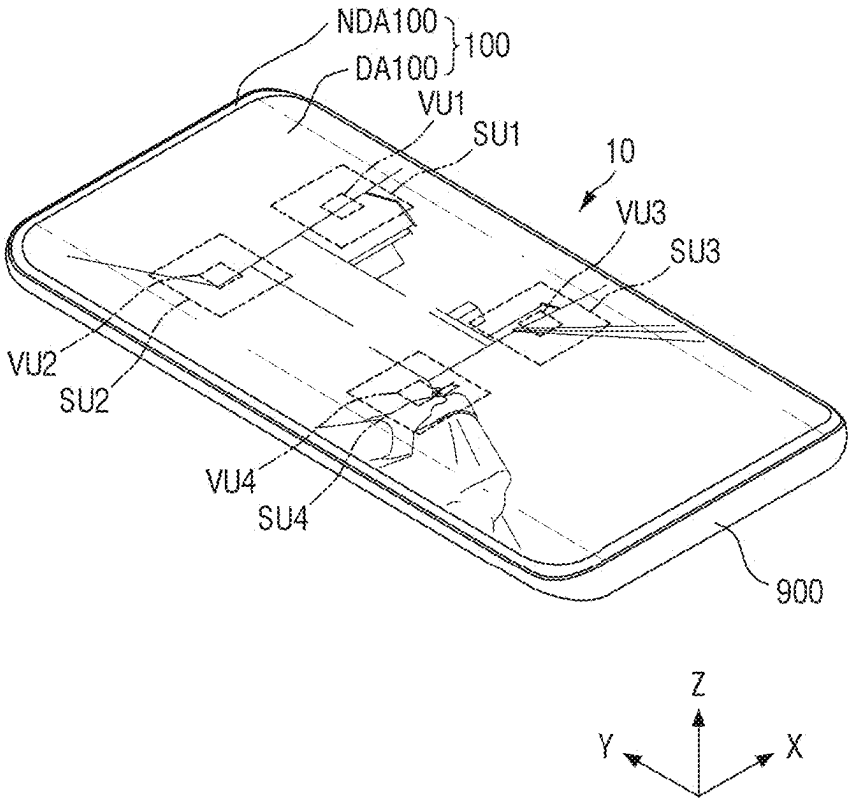

FIG. 59

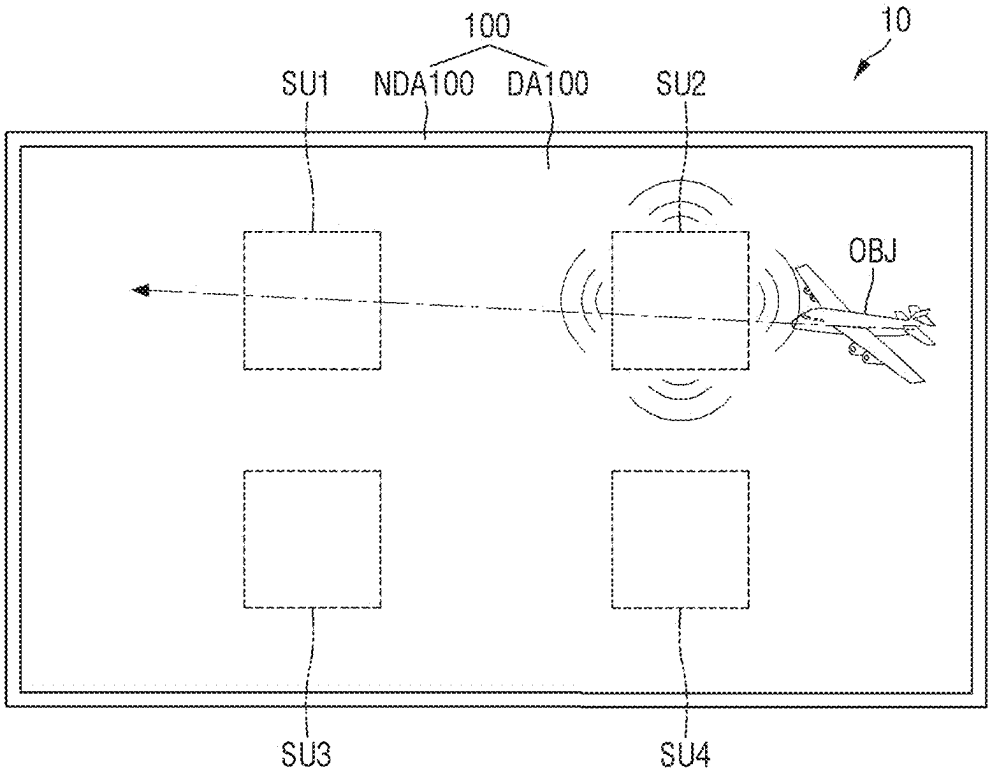

FIG. 60

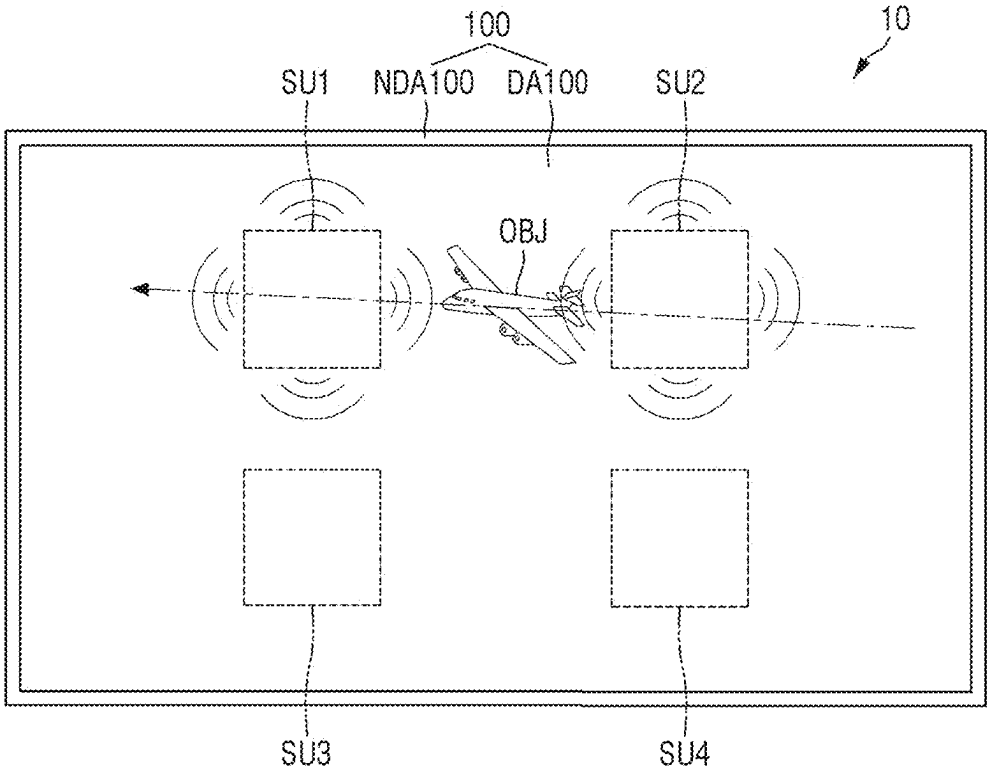

FIG. 61

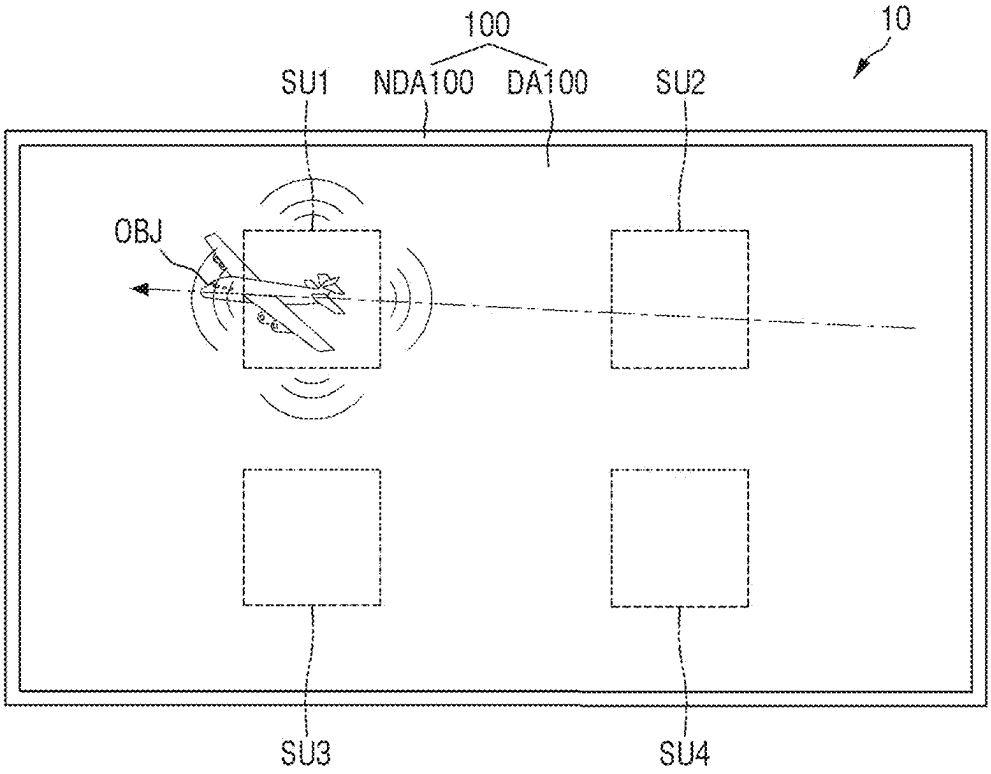

DISPLAY DEVICE

CROSS REFERENCE TO RELATED APPLICATION(S)

[0001] This application is a continuation of U.S. patent application Ser. No. 18/451,271, filed Aug. 17, 2023 (now pending), the disclosure of which is incorporated herein by reference in its entirety. U.S. patent application Ser. No. 18/451,271 is a continuation of U.S. patent application Ser. No. 17/855,209, filed Jun. 30, 2022, now U.S. Pat. No. 11,736,843, which issued Aug. 22, 2023, the disclosure of which is incorporated herein by reference in its entirety. U.S. patent application Ser. No. 17/855,209 is a continuation of U.S. patent application Ser. No. 17/070,527, filed Oct. 14, 2020, now U.S. Pat. No. 11,381,895, which issued Jul. 5, 2022, the disclosure of which is incorporated herein by reference in its entirety. U.S. patent application Ser. No. 17/070,527 claims priority to and benefit of Korean Patent Application No. 10-2019-0129531 under 35 U.S.C. § 119, filed Oct. 18, 2019, in the Korean Intellectual Property Office (KIPO), the disclosure of which is incorporated herein by reference in its entirety for all purposes.

BACKGROUND

1. Technical Field

[0002] The disclosure relates to a display device.

2. Description of the Related Art

[0003] As the information-oriented society evolves, various demands for display devices are ever increasing. For example, display devices are being employed in a variety of electronic devices such as, for example, smart phones, digital cameras, laptop computers, navigation devices, and smart televisions.

[0004] The display device may include a display panel that may display an image and a sound generator that may emit sound. Recently, a sound generator that may be attached to a surface of a display panel and vibrate the display panel to generate sound is developed. Research is ongoing for further reducing the thickness and size of sound generators.

[0005] It is to be understood that this background of the technology section is, in part, intended to provide useful background for understanding the technology. However, this background of the technology section may also include ideas, concepts, or recognitions that were not part of what was known or appreciated by those skilled in the pertinent art prior to a corresponding effective filing date of the subject matter disclosed herein.

SUMMARY

[0006] Embodiments may provide a display device including sound units incorporated into a display panel.

[0007] Additional features of embodiments will be set forth in the description which follows, and in part may be apparent from the description, or may be learned by practice of the disclosure herein.

[0008] According to an embodiment, a display device may include a display panel that may include a display layer including light-emitting elements disposed on a substrate, and a sensor electrode layer disposed on the display layer. The sensor electrode layer may comprise a first sound electrode and a second sound electrode; a vibration layer electrically contacting the first sound electrode and the second sound electrode, wherein the vibration layer may be deformed in response to a first sound driving voltage applied to the first sound electrode and a second sound driving voltage applied to the second sound electrode; and sensor electrodes disposed on the vibration layer. The sensor electrodes may sense an input.

[0009] The first sound electrode and the second sound electrode may be disposed on a same layer.

[0010] The first sound electrode may comprise a first sound stem electrode extended in one direction; and first sound branch electrodes protruding from the first sound stem electrode in another direction. The second sound electrode may comprise a second sound stem electrode extended in the one direction; and second sound branch electrodes protruding from the second sound stem electrode in the another direction.

[0011] The first sound branch electrodes and the second sound branch electrodes may be arranged alternately in the one direction.

[0012] The first sound electrode may not overlap the second sound electrode in a thickness direction of the substrate.

[0013] The vibration layer may be disposed on the first sound electrode and the second sound electrode.

[0014] The sensor electrodes may comprise sensing electrodes arranged in a first direction; and driving electrodes arranged in a second direction. The sensor electrode layer may comprise a first connection electrode electrically connected with adjacent ones of the driving electrodes in the second direction.

[0015] The vibration layer may be disposed on the first connection electrode.

[0016] Each of the adjacent ones of the driving electrodes in the second direction may be electrically connected to the first connection electrode through a first contact hole penetrating the vibration layer.

[0017] The sensor electrode layer may further comprise a first sensor insulating layer disposed on the first connection electrode.

[0018] Each of the adjacent ones of the driving electrodes in the second direction may be electrically connected to the first connection electrode through a first contact hole penetrating the first sensor insulating layer.

[0019] The first sound electrode and the second sound electrode may be disposed on the vibration layer.

[0020] The sensor electrodes may be disposed on the first sound electrode and the second sound electrode.

[0021] The sensor electrodes may comprise sensing electrodes arranged in a first direction; and driving electrodes arranged in a second direction, and the sensor electrode layer may comprise a first connection electrode electrically connected with adjacent ones of the driving electrodes in the second direction.

[0022] The first connection electrode may be disposed on the vibration layer.

[0023] Each of the adjacent ones of the driving electrodes in the second direction may be electrically connected to the first connection electrode through a first contact hole penetrating the vibration layer.

[0024] The sensor electrode layer may further comprise a first sensor insulating layer disposed on the first connection electrode.

[0025] The driving electrodes and the sensing electrodes may be disposed on the first sensor insulating layer.

[0026] The first sound electrode may be disposed on the vibration layer, and the vibration layer may be disposed on the second sound electrode.

[0027] The first sound electrode may overlap the second sound electrode in a thickness direction of the substrate.

[0028] The sensor electrodes may comprise sensing electrodes arranged in a first direction; and driving electrodes arranged in a second direction, and the sensor electrode layer may comprise a first connection electrode electrically connected with adjacent ones of the driving electrodes in the second direction.

[0029] The vibration layer may be disposed on the first connection electrode.

[0030] The first connection electrode and the second sound electrode may be disposed on a same layer.

[0031] The sensor electrode layer may further comprise a first sensor insulating layer disposed on the first connection electrode.

[0032] Each of the adjacent ones of the driving electrodes in the second direction may be electrically connected to the first connection electrode through a first contact hole penetrating the first sensor insulating layer.

[0033] According to an embodiment, a display device may include a display panel that may comprise a display layer including light-emitting elements disposed on a surface of a substrate, and a sound electrode layer including sound units disposed on an opposite surface of the substrate. Each of the sound units may comprise a first sound electrode; a second sound electrode disposed on the first sound electrode; and a first vibration layer disposed between the first sound electrode and the second sound electrode. The first vibration layer may be deformed in response to a first sound driving voltage applied to the first sound electrode and a second sound driving voltage applied to the second sound electrode. First sound electrodes of the sound units arranged in a first direction among the sound units may be electrically connected to one another. Second sound electrodes of the sound units arranged in a second direction among the sound units may be electrically connected to one another.

[0034] The sound electrode layer may further comprise a first sound line disposed between the first sound electrodes of the sound units adjacent to each other in the first direction; and a second sound line disposed between the second sound electrodes of the sound units adjacent to each other in the second direction.

[0035] The sound electrode layer may further comprise a light-shielding layer disposed between the opposite surface of the substrate and the sound electrode layer.

[0036] The display panel may comprise a bottom panel cover disposed on the sound electrode layer, the bottom panel cover may comprise a buffer that absorbs an external shock applied to the display panel, and the buffer may not overlap the sound units in a thickness direction of the substrate. The buffer may comprise through holes in which the sound units may be disposed.

[0037] The bottom panel cover may further comprise a heat dissipation member disposed on the buffer.

[0038] The sound electrode layer may comprise vibration units spaced apart from the sound units, and each of the vibration units may comprise a first vibration electrode; a second vibration electrode disposed on the first vibration electrode; and a second vibration layer disposed between the first vibration electrode and the second vibration electrode. The second vibration layer may be deformed in response to a first vibration driving voltage applied to the first vibration electrode and a second vibration driving voltage applied to the second vibration electrode.

[0039] The sound units may be adjacent to the vibration units.

[0040] Each of the sound units may comprise a first subsidiary sound unit disposed adjacent to a first side surface and a second side surface of the vibration units; a second subsidiary sound unit disposed adjacent to the first side surface and a third side surface of the vibration units; a third subsidiary sound unit disposed adjacent to the second side surface and a fourth side surface of the vibration units; and a fourth subsidiary sound unit disposed adjacent to the third side surface and the fourth side surface of the vibration units.

[0041] A first sound electrode of the first subsidiary sound unit may be electrically connected to a first sound electrode of the second subsidiary sound unit, a first sound electrode of the third subsidiary sound unit may be electrically connected to a first sound electrode of the fourth subsidiary sound unit, the first sound electrode of the first subsidiary sound unit may be spaced apart from the first sound electrode of the third subsidiary sound unit, and the first sound electrode of the second subsidiary sound unit may be spaced apart from the first sound electrode of the fourth subsidiary sound unit.

[0042] A second sound electrode of the first subsidiary sound unit may be electrically connected to a second sound electrode of the third subsidiary sound unit, a second sound electrode of the second subsidiary sound unit may be electrically connected to a second sound electrode of the fourth subsidiary sound unit, the second sound electrode of the first subsidiary sound unit may be spaced apart from the second sound electrode of the second subsidiary sound unit, and the second sound electrode of the third subsidiary sound unit may be spaced apart from the second sound electrode of the fourth subsidiary sound unit.

[0043] The sound electrode layer may comprise a first subsidiary sound connection line electrically connected to a first sound electrode of the first subsidiary sound unit and a first sound electrode of the second subsidiary sound unit; a second subsidiary sound connection line electrically connected to a first sound electrode of the third subsidiary sound unit and a first sound electrode of the fourth subsidiary sound unit; a third subsidiary sound connection line electrically connected to a second sound electrode of the first subsidiary sound unit and a second sound electrode of the third subsidiary sound unit; and a fourth subsidiary sound connection line electrically connected to a second sound electrode of the second subsidiary sound unit and a second sound electrode of the fourth subsidiary sound unit.

[0044] The sound electrode layer may further comprise a first vibration line electrically connected with the first sound electrodes of the vibration units adjacent to each other in the first direction; and a second vibration line electrically connected with the second sound electrodes of the vibration units adjacent to each other in the second direction.

[0045] The first vibration line may be disposed between the first subsidiary sound connection line and the second subsidiary sound connection line, and the second vibration line may be disposed between the third subsidiary sound connection line and the fourth subsidiary sound connection line.

[0046] The first vibration lines may be disposed between the first subsidiary sound unit and the third subsidiary sound unit and may be disposed between the second subsidiary sound unit and the fourth subsidiary sound unit, and the second vibration lines may be disposed between the first subsidiary sound unit and the second subsidiary sound unit and may be disposed between the third subsidiary sound unit and the fourth subsidiary sound unit.

[0047] The sound electrode layer may comprise a shielding unit spaced apart from the sound units, and the shielding unit may comprise a first shielding electrode; a second shielding electrode overlapping the first shielding electrode in a thickness direction of the substrate; and a third vibration layer disposed between the first shielding electrode and the second shielding electrode. The third vibration layer may be deformed in response to a first shielding driving voltage applied to the first shielding electrode and a second shielding driving voltage applied to the second shielding electrode.

[0048] The first sound driving voltage applied to the first sound electrode of the sound unit adjacent to the shielding unit may be equal to the second shielding driving voltage applied to the second shielding electrode of the shielding unit, and the second sound driving voltage applied to the second sound electrode of the sound unit adjacent to the shielding unit may be equal to the first shielding driving voltage applied to the first shielding electrode of the shielding unit.

[0049] The second shielding electrode may be electrically connected to at least one of the first sound electrodes, and the first shielding electrode may be electrically connected to at least one of the second sound electrodes.

[0050] The sound electrode layer may comprise force sensing units spaced apart from the sound units, and each of the force sensing units may comprise a force driving electrode; a force sensing electrode spaced apart from the force driving electrode; and a force sensing layer disposed on the force driving electrode and the force sensing electrode and having a resistance variable in response to a force applied to the force sensing layer.

[0051] The force driving electrode, the force sensing electrode, and the first sound electrode are made of a same material.

[0052] Each of the force sensing units may further comprise a bump disposed on the force sensing layer.

[0053] The bump and the second sound electrode may be made of a same material.

[0054] The sound electrode layer may comprise a fixed magnet disposed on the second sound electrode, and the bottom panel cover may further comprise a planar coil overlapping the fixed magnet in the thickness direction of the substrate and disposed on the buffer.

[0055] A current may flow through the planar coil to generate a magnetic field of the fixed magnet and a magnetic field of the planar coil, the current may flow from an end to another end of the planar coil to generate an attractive force between the fixed magnet and the planar coil, and the current may flow from the another end to the end of the planar coil to generate a repulsive force between the fixed magnet and the planar coil.

[0056] According to an embodiment, a display device may include a display panel that may comprise a substrate including an upper surface and a side surface extended from a side of the upper surface, a display layer including light-emitting elements disposed on a surface of the substrate in the upper surface and the side surface, and a sound electrode layer including a sound unit disposed on an opposite surface of the substrate; and a sensor unit disposed on the opposite surface of the substrate in the side surface. The sound unit may comprise a first sound electrode; a second sound electrode disposed on the first sound electrode; and a vibration layer disposed between the first sound electrode and the second sound electrode. The vibration layer may be deformed in response to a first sound driving voltage applied to the first sound electrode and a second sound driving voltage applied to the second sound electrode.

[0057] The sensor unit may be a fingerprint sensor unit that emits ultrasonic waves or light and detects ultrasonic waves or light reflected by a fingerprint.

[0058] The sensor unit may be a force sensing unit that may comprise a force driving electrode; a force sensing electrode spaced apart from the force driving electrode; and a force sensing layer disposed on the force driving electrode and the force sensing electrode and having a resistance variable in response to a force applied to the force sensing layer.

[0059] The sound electrode layer may comprise a second sound unit disposed on the opposite surface of the substrate in the side surface of the substrate.

[0060] According to an embodiment, the first sound electrodes, the second sound electrodes and a vibration layer may be formed or disposed on a sensor electrode layer for sensing a user's touch input in a display device. Accordingly, in addition to sensing a user's touch input using driving electrodes and sensing electrodes of the sensor electrode layer, sound may be output by vibrating the vibration layer by the first and second sound electrodes of the sensor electrode layer. Sound may be output by using the sound units incorporated into the display panel.

[0061] According to an embodiment, a sound electrode layer including first sound electrodes, second sound electrodes and a vibration layer may be disposed between the substrate of a display panel and a bottom panel cover in a display device. Therefore, sound may be output by vibrating the vibration layer by the first sound electrodes and the second sound electrodes of the sound electrode layer. Sound may be output by using the sound units incorporated into the display panel.

[0062] Other features and embodiments may be apparent from the following detailed description, the drawings, and the claims.

[0063] It is to be understood that both the foregoing description and the following detailed description are not to be construed as limiting of an embodiment as described or claimed herein.

BRIEF DESCRIPTION OF THE DRAWINGS

[0064] The accompanying drawings, which are included to provide a further understanding of the disclosure, illustrate embodiments wherein:

[0065] FIG. **1** is a perspective view of a display device according to an embodiment.

[0066] FIG. **2** is an exploded, perspective view of a display device according to an embodiment.

[0067] FIG. **3** is a block diagram showing a display device according to an embodiment.

[0068] FIG. **4** is a plan view showing a display panel according to an embodiment.

[0069] FIG. **5** is a side view showing an example of the display panel of FIG. **4**.

[0070] FIG. **6** is a view showing a layout of a display layer of a display panel according to an embodiment.

[0071] FIG. **7** is a view showing a layout of a sensor electrode layer of a display panel according to an embodiment.

[0072] FIG. **8** is an enlarged plan view showing a part of the sensor area of FIG. **7**.

[0073] FIG. **9** is a view showing an example of the sensor driver electrically connected to the driving electrodes and the sensing electrodes of FIG. **7**.

[0074] FIG. **10** is an enlarged plan view showing the driving electrodes, the sensing electrodes, the first connection electrodes, the first sound electrode and the shielding electrode of FIG. **8** in detail.

[0075] FIG. **11** is a schematic cross-sectional view taken along line I-I' of FIG. **10**.

[0076] FIG. **12** is a schematic cross-sectional view taken along line II-II' of FIG. **10**.

[0077] FIG. **13** is a view showing an example of vibration of the vibration layer by the inverse piezoelectric according to a first sound driving voltage applied to the first sound electrode and a second sound driving voltage applied to the second sound electrode of FIG. **9**.

[0078] FIG. **14** is a schematic cross-sectional view taken along line I-I' of FIG. **10**.

[0079] FIG. **15** is a schematic cross-sectional view taken along line II-II' of FIG. **10**.

[0080] FIG. **16** is a schematic cross-sectional view taken along line I-I' of FIG. **10**.

[0081] FIG. **17** is a schematic cross-sectional view taken along line II-II' of FIG. **10**.

[0082] FIG. **18** is a schematic cross-sectional view taken along line I-I' of FIG. **10**.

[0083] FIG. **19** is a schematic cross-sectional view taken along line II-II' of FIG. **10**.

[0084] FIG. **20** is a view showing a layout of a sensor electrode layer of a display panel according to an embodiment.

[0085] FIG. **21** is an enlarged plan view showing a part of the sensor area of FIG. **20**.

[0086] FIG. **22** is a view showing an example of a sensor driver electrically connected to the driving electrodes and the sensing electrodes, and a sound driver electrically connected to the first sound electrodes and the second sound electrodes of FIG. **20**.

[0087] FIG. **23** is an enlarged plan view showing the driving electrodes, the sensing electrodes, the first sound electrode, the first connection electrodes, the second connection electrode and the third connection electrode of FIG. **22**.

[0088] FIG. **24** is a schematic cross-sectional view taken along line III-III' of FIG. **23**.

[0089] FIG. **25** is a schematic cross-sectional view of an example, taken along line IV-IV' of FIG. **23**.

[0090] FIG. **26** is a view showing an example of a change of the vibration layer according to the voltage applied to the first sound electrode and the second sound electrode of FIG. **22**.

[0091] FIG. **27** is a waveform diagram showing a first sound driving voltage applied to the first sound electrode, a second sound driving voltage applied to the second sound electrode, a first shielding voltage applied to the first shielding electrode, and a second shielding voltage applied to the second shielding electrode.

[0092] FIG. **28** is a schematic cross-sectional view taken along line III-III' of FIG. **23**.

[0093] FIG. **29** is a side view showing an example of the display panel of FIG. **4**.

[0094] FIGS. **30** and **31** are views showing a layout of a sound electrode layer of a display panel according to an embodiment.

[0095] FIG. **32** is a view showing sound units of a sound electrode layer of a display panel and a buffer of a bottom panel cover according to an embodiment.

[0096] FIG. **33** is a schematic cross-sectional view showing an example, taken along line V-V' of FIGS. **30** and **31**.

[0097] FIG. **34** is a schematic cross-sectional view showing an example, taken along line VI-VI' of FIGS. **30** and **31**.

[0098] FIG. **35** is a view showing a layout of a sound electrode layer of a display panel according to an embodiment.

[0099] FIG. **36** is a view showing a layout of subsidiary sound units and a vibration unit of the first sound unit of FIG. **35** in detail.

[0100] FIG. **37** is a schematic cross-sectional view taken along line VII-VII' of FIG. **36**.

[0101] FIG. **38** is a schematic cross-sectional view taken along line VIII-VIII' of FIG. **36**.

[0102] FIG. **39** is a schematic cross-sectional view taken along line IX-IX' of FIG. **36**.

[0103] FIG. **40** is a schematic cross-sectional view taken along line X-X' of FIG. **36**.

[0104] FIG. **41** is a view showing a layout of a display panel according to an embodiment.

[0105] FIG. **42** is a schematic cross-sectional view taken along line XI-XI' of FIG. **41**.

[0106] FIG. **43** is a schematic cross-sectional view taken along line XII-XII' of FIG. **41**.

[0107] FIG. **44** is a view showing a layout of a display panel according to an embodiment.

[0108] FIG. **45** is a view showing a layout of the force driving electrode, the force sensing electrode, the force driving line and the force sensing line of the first force sensing unit of FIG. **44**.

[0109] FIG. **46** is a schematic cross-sectional view taken along line XIII-XIII' of FIG. **45**.

[0110] FIG. **47** is a view showing a layout of a display panel according to an embodiment.

[0111] FIG. **48** is a schematic cross-sectional view taken along line XIV-XIV' of FIG. **47**.

[0112] FIGS. **49** and **50** are views showing a change in the vibration layer according to the fixed magnetic field of the magnet of FIG. **47**, the induced magnetic field of a coil, and the voltage applied to the first sound electrode and the second sound electrode.

[0113] FIG. **51** is a perspective view of a display device according to an embodiment.

[0114] FIG. **52** is a perspective view showing a display panel according to an embodiment.

[0115] FIG. **53** is a development view showing a display panel according to an embodiment.

[0116] FIG. **54** is a view showing an example where a user makes an input using force sensing units disposed on the side surfaces of the display device.

[0117] FIG. **55** is a development view showing a display panel according to an embodiment.

[0118] FIG. **56** is a development view showing a display panel according to an embodiment.

[0119] FIG. **57** is a view showing an example where sound is output through sound generating units disposed on the flat portion and the side surfaces of the display device.

[0120] FIG. **58** is a view showing an example where sound is output by sound units and haptic feedback is provided by vibration units according to an image displayed by the display device.

[0121] FIGS. **59** to **61** are views showing sound output by sound units according to an image displayed by the display device.

DETAILED DESCRIPTION OF THE EMBODIMENTS

[0122] The embodiments will now be described more fully hereinafter with reference to the accompanying drawings. The embodiments may, however, be provided in different forms and should not be construed as limiting. The same reference numbers indicate the same components throughout the disclosure. In the accompanying figures, the thickness of layers and regions may be exaggerated for clarity.

[0123] Some of the parts which are not associated with the description may not be provided in order to describe embodiments of the disclosure and like reference numerals refer to like elements throughout the specification.

[0124] It will also be understood that when a layer, film, region, substrate, or area, or element is referred to as being "on" another layer, film, region, substrate, or area, or element, it can be directly on the other layer, film, region, substrate, or area, or element, or intervening layers, films, regions, substrates, or areas, or elements may also be present. In contrast, when a layer, film, region, substrate, or area, or element is referred to as being "directly on" another a layer, film, region, substrate, or area, or element, there may be no intervening layers, films, regions, substrates, or areas, or elements present.

[0125] Further, in the specification, the phrase "in a plan view" means when an object portion is viewed from above, and the phrase "in a schematic cross-sectional view" means when a schematic cross-section taken by vertically cutting an object portion is viewed from the side.

[0126] Additionally, the terms "overlap" or "overlapped" mean that a first object may be above or below or to a side of a second object, and vice versa. Additionally, the term "overlap" may include layer, stack, face or facing, extending over, covering or partly covering or any other suitable term as would be appreciated and understood by those of ordinary skill in the art. The terms "face" and "facing" mean that a first element may directly or indirectly oppose a second element. In a case in which a third element intervenes between the first and second element, the first and second element may be understood as being indirectly opposed to one another, although still facing each other. When an element is described as 'not overlapping' or 'to not overlap' another element, this may include that the elements are spaced apart from each other, offset from each other, or set aside from each other or any other suitable term as would be appreciated and understood by those of ordinary skill in the art.

[0127] The spatially relative terms "below", "beneath", "lower", "above", "upper", or the like, may be used herein for ease of description to describe the relations between one element or component and another element or component as illustrated in the drawings. It will be understood that the spatially relative terms are intended to encompass different orientations of the device in use or operation, in addition to the orientation depicted in the drawings. For example, in the case where a device illustrated in the drawing is turned over, the device positioned "below" or "beneath" another device may be placed "above" another device. Accordingly, the illustrative term "below" may include both the lower and upper positions. The device may also be oriented in other directions and thus the spatially relative terms may be interpreted differently depending on the orientations.

[0128] Throughout the specification, when an element is referred to as being "connected" or "coupled" to another element, the element may be "directly connected" or "directly coupled" to another element, or "electrically connected" or "electrically coupled" to another element with one or more intervening elements interposed therebetween. It will be further understood that when the terms "comprises," "comprising," "includes" and/or "including", "have" and/or "having" are used in this specification, they or it may specify the presence of stated features, integers, steps, operations, elements and/or components, but do not preclude the presence or addition of other features, integers, steps, operations, elements, components, and/or any combination thereof.

[0129] Also, when an element is referred to as being "in contact" or "contacted" or the like to another element, the element may be in "electrical contact" or in "physical contact" with another element; or in "indirect contact" or in "direct contact" with another element.

[0130] It will be understood that, although the terms "first," "second," "third," or the like may be used herein to describe various elements, these elements should not be limited by these terms. These terms are used to distinguish one element from another element or for the convenience of description and explanation thereof. For example, when "a first element" is discussed in the description, it may be termed "a second element" or "a third element," and "a second element" and "a third element" may be termed in a similar manner without departing from the teachings herein.

[0131] As used herein, the singular forms "a," "an" and "the" are intended to include the plural forms as well, unless the context clearly indicates otherwise.

[0132] "About" or "approximately" as used herein is inclusive of the stated value and means within an acceptable range of deviation for the particular value as determined by one of ordinary skill in the art, considering the measurement in question and the error associated with measurement of the particular quantity (i.e., the limitations of the measurement system). For example, "about" may mean within one or more standard deviations, or within +30%, 20%, 10%, 5% of the stated value.

[0133] In the specification and the claims, the term "and/or" is intended to include any combination of the terms "and" and "or" for the purpose of its meaning and interpretation. For example, "A and/or B" may be understood to mean "A, B, or A and B." The terms "and" and "or" may be used in the conjunctive or disjunctive sense and may be understood to be equivalent to "and/or." In the specification and the claims, the phrase "at least one of" is intended to include the meaning of "at least one selected from the group

of" for the purpose of its meaning and interpretation. For example, "at least one of A and B" may be understood to mean "A, B, or A and B."

[0134] As used herein, the term "unit" or "module" denotes a structure or element as illustrated in the drawings and as described in the specification. However, the disclosure is not limited thereto. The term "unit" or "module" is not to be limited to that which is illustrated in the drawings

[0135] In the following examples, the x-axis, the y-axis and the z-axis are not limited to three axes of the rectangular coordinate system, and may be interpreted in a broader sense. For example, the x-axis, the y-axis, and the z-axis may be perpendicular to one another, or may represent different directions that may not be perpendicular to one another.

[0136] Unless otherwise defined, all terms used herein (including technical and scientific terms) have the same meaning as commonly understood by those skilled in the art to which this disclosure pertains. It will be further understood that terms, such as those defined in commonly used dictionaries, should be interpreted as having a meaning that is consistent with their meaning in the context of the relevant art and will not be interpreted in an ideal or excessively formal sense unless clearly defined in the specification.

[0137] FIG. **1** is a perspective view of a display device according to an embodiment. FIG. **2** is an exploded, perspective view of a display device according to an embodiment.

[0138] Referring to FIGS. **1** to **2**, a display device **10** according to an embodiment is for displaying moving images or still images. The display device **10** may be used as the display screen of portable electronic devices such as a mobile phone, a smart phone, a tablet PC, a mobile communications terminal, an electronic notebook, an electronic book, a portable multimedia player (PMP), a navigation device and a ultra mobile PC (UMPC), as well as the display screen of various products such as a television, a notebook, a monitor, a billboard and the Internet of Things. In addition, the display device **10** according to an embodiment may be applied to wearable devices such as a smart watch, a watch phone, an eyeglass display, and a head-mounted display (HMD) device. In addition, the display device **10** according to an embodiment may be used as a center information display (CID) disposed in the instrument of a vehicle and the center fascia or the dashboard of a vehicle, as a room mirror display on the behalf of the side mirrors of a vehicle (room mirror display), as a display placed on the back of the front seats for entertainment for the rear seats of a vehicle.

[0139] In the example shown in FIGS. **1** and **2**, the display device **10** according to an embodiment is applied to a smart phone for convenience of illustration. The display device **10** according to an embodiment may include a cover window **100**, a display panel **300**, a display circuit board **310**, a display driver **320**, a sensor driver **330**, a sound driver **340**, a bracket **600**, a main circuit board **700**, a battery **790** and a bottom cover **900**.

[0140] As used herein, the term "upper side" refers to the side of the display panel **300** in the z-axis direction where the cover window **100** is disposed, whereas the term "lower side" refers to the opposite side of the display panel **300** in the z-axis direction where the bracket **600** is disposed. As used herein, the terms "left," "right," "upper" and "lower" sides indicate relative positions in a case that the display panel **300** is viewed from the top. For example, the "left side" refers to the opposite direction indicated by the arrow of the x-axis, the "right side" refers to the direction indicated by the arrow of the x-axis, the "upper side" refers to the direction indicated by the arrow of the z-axis, and the "lower side" refers to the opposite direction indicated by the arrow of the z-axis.

[0141] The display device **10** may have a substantially rectangular shape in a case that the display device **10** is viewed from the top. For example, the display device **10** may have a substantially rectangular shape having shorter sides in a first direction (x-axis direction) and longer sides in a second direction (y-axis direction) in a case that the display device **10** is viewed from the top as shown in FIG. **1**. Each of the corners where the short side in the first direction (x-axis direction) meets the longer side in the second direction (y-axis direction) may be rounded with a predetermined curvature or may be a right angle. The shape of the display device **10** in a case that the display device **10** is viewed from the top is not limited to a substantially rectangular shape, but may be formed in another substantially polygonal shape, circular shape, or elliptical shape.

[0142] The display device **10** may include a first area DRA**1**, and second areas DRA**2** extended from the right and left sides of the first area DRA**1**, respectively. The first area DRA**1** may be either flat or curved. The second areas DRA**2** may be either flat or curved. In a case that both the first area DRA**1** and the second areas DRA**2** may be formed as curved surfaces, the curvature of the first area DRA**1** may be different from the curvature of the second areas DRA**2**. In a case that the first area DRA**1** is formed as a curved surface, it may have a constant curvature or a varying curvature. In a case that the second areas DRA**2** may be formed as curved surfaces, they may have a constant curvature or a varying curvature. In a case that both the first area DRA**1** and the second areas DRA**2** may be formed as flat surfaces, the angle between the first area DRA**1** and the second areas DRA**2** may be an obtuse angle.

[0143] Although the second areas DRA**2** may be extended from the left and right sides of the first area DRA**1**, respectively, in FIG. **1**, this is merely illustrative. The second area DRA**2** may be extended from only one of the right and left sides of the first area DRA**1**. Alternatively, the second area DR**2** may be extended from at least one of upper and lower sides of the first area DR**1**, as well as the left and right sides. Alternatively, the second areas DRA**2** may be eliminated, and the display device **10** may include only the first area DRA**1**.

[0144] The cover window **100** may be disposed on the display panel **300** to cover or overlap the upper surface of the display panel **300**. Thus, the cover window **100** may protect the upper surface of the display panel **300**.

[0145] The cover window **100** may include a transmissive portion DA**100** corresponding to the display panel **300** and a non-transmissive portion NDA**100** corresponding to the other area than the display panel **300**. The cover window **100** may be disposed in the first region DR**1** and the second regions DR**2**. The transmissive portion DA**100** may be disposed in a part of the first region DR**1** and a part of each of the second regions DR**2**. The non-transmissive portion NDA**100** may include an opaque material that blocks light. The non-transmissive portion NDA**100** may include a pattern that may be perceived by a user in a case that no image is displayed.

[0146] The display panel **300** may be disposed under or below the cover window **100**. The display panel **300** may be disposed such that it overlaps with the transmissive portion DA**100** of the cover window **100**. The display panel **300** may be disposed in the first area DR**1** and the second areas DR**2**. A user may see images from the display panel **300** in the first area DR**1** as well as the second areas DR**2**.

[0147] The display panel **300** may be a light-emitting display panel including light-emitting elements. For example, the display panel **300** may be an organic light-emitting display panel using organic light-emitting diodes including organic emissive layer, a micro light-emitting diode display panel using micro LEDs, a quantum-dot light-emitting display panel including quantum-dot light-emitting diodes including an quantum-dot emissive layer, or an inorganic light-emitting display panel using inorganic light-emitting elements including an inorganic semiconductor.

[0148] The display panel **300** may be a rigid display panel and thus may not be easily bent, or a flexible display panel that may be flexible and thus may be easily bent, folded or rolled. For example, the display panel **300** may be a foldable display panel that may be folded and unfolded, a curved display panel having a curved display surface, a bended display panel having a bent area other than the display surface, a rollable display panel that may be rolled and unrolled, and a stretchable display panel that may be stretched.

[0149] The display panel **300** may be implemented as a transparent display panel to allow a user to see an object or a background under or below the display panel from above the display panel **300** through it. Alternatively, the display panel **300** may be implemented as a reflective display panel that may reflect an object or a background on the upper surface of the display panel **300**.

[0150] As shown in FIG. **4**, the display panel **300** may include a main area MA where images may be displayed, and a subsidiary area SBA protruding from one side of the main area MA.

[0151] The display circuit board **310** may be attached in the subsidiary area SBA of the display panel **300**. The display circuit board **310** may be attached in the subsidiary area SBA of the display panel **300** using an anisotropic conductive film. The display circuit board **310** may be a flexible printed circuit board (FPCB) that may be bent, a rigid printed circuit board (PCB) that may be rigid and not bendable, or a hybrid printed circuit board including a rigid printed circuit board and a flexible printed circuit board.

[0152] The display driver **320** may be disposed on the subsidiary area SBA of the display panel **300**. The display driver **320** may receive control signals and supply voltages and may generate and output signals and voltages for driving the display panel **300**. The display driver **320** may be implemented as an integrated circuit (IC).

[0153] The sensor driver **330** and the sound driver **340** may be disposed on the display circuit board **310**. Each of the sensor driver **330** and the sound driver **340** may be implemented as an integrated circuit. Alternatively, the sensor driver **330** and the sound driver **340** may be implemented as one integrated circuit. The sensor driver **330** and the sound driver **340** may be attached on the display circuit board **310**.

[0154] The sensor driver **330** may be electrically connected to sensor electrodes of a sensor electrode layer of the display panel **300** through the display circuit board **310**, and thus it may output touch driving signals to the sensor electrodes and may sense the voltage charged in the mutual capacitance. The sound driver **340** may be electrically connected to sound electrodes of a sensor electrode layer of the display panel **300** through the display circuit board **310**, and thus it may output sound driving voltages to the sound electrodes.

[0155] The sensor electrode layer of the display panel **300** may sense a user's touch input using at least one of a variety of touch sensing schemes such as resistive sensing and capacitive sensing. For example, in a case that a user's touch input is sensed by using the sensor electrode layer of the display panel **300** by the capacitive sensing, the sensor driver **330** applies driving signals to the driving electrodes among the sensor electrodes, and senses the voltages charged in the mutual capacitance between the driving electrodes and the sensing electrodes through the sensing electrodes among the sensor electrodes, thereby determining whether there is a user's touch. User's touches may include a physical contact and a near proximity. A user's physical contact refers to that an object such as the user's finger or a pen is brought into contact with the cover window **100** disposed on the sensor electrode layer. A near proximity refers to that an object such as the user's finger or a pen is close to but is spaced apart from the cover window **100**, such as hovering over it. The sensor driver **330** may transmit detection data to the main processor **710** based on the sensed voltages, and the main processor **710** may analyze the detection data to calculate the coordinates of the position where the touch input is made.

[0156] On the display circuit board **310**, a power supply for supplying driving voltages for driving the pixels PX, the scan driver and the display drive **320** of the display panel **300** may be disposed. Alternatively, the power supply may be integrated with the display drive **320**, in which case, the display driver **320** and the power supply may be implemented as a single integrated circuit.

[0157] The bracket **600** for supporting the display panel **300** may be disposed under or below the display panel **300**. The bracket **600** may include plastic, metal, or both plastic and metal. In the bracket **600**, a first camera hole CMH**1** in which a camera device **731** may be inserted, a battery hole BH in which the battery **790** may be disposed, a cable hole CAH through which a cable **314** connected to the display circuit board **310** may pass, for example.

[0158] The main circuit board **700** and the battery **790** may be disposed under or below the bracket **600**. The main circuit board **700** may be either a printed circuit board or a flexible printed circuit board.

[0159] The main circuit board **700** may include a main processor **710**, a camera device **731**, and a main connector **711**. The maintain processor **710** may be implemented as an integrated circuit. The camera device **731** may be disposed on both the upper and lower surfaces of the main circuit board **700**, and the main processor **710** and the main connector **711** may be disposed on one of the upper and lower surfaces of the main circuit board **700**.

[0160] The main processor **710** may control all the functions of the display device **10**. For example, the main processor **710** may output digital video data to the display driver **320** through the display circuit board **310** so that the display panel **300** displays images. In addition, the main processor **710** receives detection data from the sensor driver

330. The main processor **710** may determine whether there is a user's touch based on the detection data, and may execute an operation associated with the user's physical contact or near proximity if so. For example, the main processor **710** may calculate the coordinates of the user's touch by analyzing the detection data, and then may run an application indicated by an icon touched by the user or perform the operation. The main processor **710** may be an application processor, a central processing unit, or a system chip implemented as an integrated circuit.

[0161] The camera device **731** processes image frames such as still image and video obtained by the image sensor in the camera mode and outputs them to the main processor **710**. The camera device **731** may include at least one of a camera sensor (for example, CCD, CMOS, etc. within the spirit and the scope of the disclosure), a photo sensor (or an image sensor), and a laser sensor.

[0162] The cable **314** passing through the cable hole CAH of the bracket **600** may be connected to the main connector **711**, and thus the main circuit board **700** may be electrically connected to the display circuit board **310**.

[0163] In addition to the main processor **740**, the camera device **731** and the main connector **711**, the main circuit board **700** may include a wireless communications unit **720**, at least one input unit **730**, at least one sensor unit **740**, at least one output unit **750**, at least one interface unit **760**, a memory **770**, and a power supply unit **780**, shown in FIG. **3**.

[0164] For example, the wireless communications unit **720** may include at least one of a broadcasting receiving module **721**, a mobile communications module **722**, a wireless Internet module **723**, a near-field communications module **724**, and a location information module **725**.

[0165] The broadcast receiving module **721** receives a broadcast signal and/or broadcast related information from an external broadcast managing server through a broadcast channel. The broadcasting channel may include a satellite channel and a terrestrial channel.

[0166] The mobile communications module **722** may transmit/receive wireless signals to/from at least one of a base station, an external terminal and a server in a mobile communications network established according to technical standards or communications schemes for mobile communications (for example, global system for mobile communications (GSM), code division multi access (CDMA), code division multi access 2000 (CDMA2000), enhanced voice-data optimized or enhanced voice-data only (EV-DO), wideband CDMA (WCDMA), high speed downlink packet access (HSDPA), high speed uplink packet access (HSUPA), long term evolution (LTE), long term evolution-advanced (LTE-A), within the spirit and the scope of the disclosure.). The wireless signals may include a voice call signal, a video call signal, or a variety of types of data depending on transmission and reception of a text/multimedia message.

[0167] The wireless Internet module **723** refers to a module for wireless Internet connection. The wireless Internet module **723** may transmit and receive wireless signals in a communications network according to wireless Internet technologies. Examples of wireless Internet technologies include wireless LAN (WLAN), wireless-fidelity (Wi-Fi), wireless fidelity (Wi-Fi) Direct, digital living network alliance (DLNA), within the spirit and the scope of the disclosure.

[0168] The near-field communications module **724** is for near field communications, and may support near field communications by using at least one of: Bluetooth™, radio frequency identification (RFID), infrared data association (IrDA), ultra wideband (UWB), ZigBee, near-field communications (NFC), Wi-Fi, Wi-Fi Direct and wireless universal serial bus (Wireless USB). The near-field communications module **724** may support wireless communications between the display device **10** and a wireless communications system, between the display device **10** and another electronic device, or between the display device **10** and a network where another electronic device (or an external server) may be located or disposed over wireless area networks. The wireless area network may be a wireless personal area network. Another electronic device may be a wearable device that may exchange (or interworking) data with the display device **10**.

[0169] The location information module **725** is a module for acquiring the location (or current location) of the display device **10**. Examples of the location information module **725** include a global positioning system (GPS) module or a wireless fidelity (Wi-Fi) module. For example, the display device **10** utilizing a GPS module may acquire its location **10** by using signals transmitted from GPS satellites. By utilizing a Wi-Fi module, the display device **10** may acquire its location based on the information of wireless access points (APs) that transmit/receive wireless signals to/from the Wi-Fi module. The location information module **725** refers to any module that may be used to acquire the location (or current location) of the display device **10** and is not limited to a module that calculates or acquires the location of the display device **10** by itself.

[0170] The input unit **730** may include an image input unit for inputting an image signal, such as a camera device **731**, an audio input unit for inputting an audio signal, such as a microphone **732**, and an input device **733** for receiving information from a user.

[0171] The camera device **731** processes an image frame such as a still image or a moving image obtained by an image sensor in a video call mode or a recording mode. The processed image frames may be displayed on the display panel **300** or stored in the memory **770**.

[0172] The microphone **732** processes external sound signals into electrical voice data. The processed voice data may be utilized in a variety of ways depending on a function or an application being executed on the display device **10**. In the microphone **732**, a variety of algorithms for removing different noises generated during a process of receiving an external sound signal may be implemented.

[0173] The main processor **710** may control the operation of the display device **10** in response to the information input through the input device **733**. The input device **733** may include a mechanical input means or a touch input means such as a button, a dome switch, a jog wheel, a jog switch, for example, positioned on the rear or side surface of the display device **10**. The touch input means may be implemented with the sensor electrode layer of the display panel **300**.

[0174] The sensor unit **740** may include one or more sensors that may sense at least one of information in the display device **10**, the environment information surrounding the display device **10**, and user information, and generate a sensing signal associated with it. The main processor **710** may control driving or operation of the display device **10** or

may perform data processing, function, or operation associated with an application installed on the display device **10** based on the sensing signal. The sensor unit **740** may include at least one of: a proximity sensor, an illumination sensor, an acceleration sensor, a magnetic sensor, a gravity sensor (G-sensor), a gyroscope sensor, a motion sensor, a RGB sensor, an infrared sensors (IR sensor), a finger scan sensor, an ultrasonic sensor, an optical sensor, a battery gauge, an environmental sensor (for example, a barometer, a hygrometer, a thermometer, a radiation sensor, a heat sensor, a gas sensor, within the spirit and the scope of the disclosure), and a chemical sensor (for example, an electronic nose, a healthcare sensor, a biometric sensor, within the spirit and the scope of the disclosure).

[0175] The proximity sensor may refer to a sensor that may detect the presence of an object approaching a predetermined detection surface or a nearby object by using an electromagnetic force, an infrared ray, for example, without using a mechanical contact. Examples of the proximity sensor include a transmissive photoelectric sensor, a direct reflective photoelectric sensor, a mirror reflective photoelectric sensor, a high-frequency oscillation proximity sensor, a capacitive proximity sensor, a magnetic proximity sensor, an infrared proximity sensor, for example. The proximity sensor may detect not only a proximity touch but also a proximity touch pattern such as a proximity touch distance, a proximity touch direction, a proximity touch speed, a proximity touch time, a proximity touch position, and a proximity touch moving state. The main processor **710** may process data (or information) corresponding to the proximity touch operation and the proximity touch pattern detected by the proximity sensor, and may control the display panel **300** so that it displays visual information corresponding to the processed data. The ultrasonic sensor may recognize location information of an object using ultrasonic waves. The main processor **710** may calculate the location of an object based on information detected from the optical sensor and the ultrasonic sensors. Because the speed of the light is different from the speed of the ultrasonic waves, the position of the object may be calculated using the time taken for the light to reach the optical sensor and the time taken for the ultrasonic wave to reach the ultrasonic sensor.

[0176] The output unit **750** is for generating outputs associated with visual, auditory, tactile effects, and the like, may include at least one of the display panel **300**, the sound output unit **751**, the haptic module **752** and the light output unit **753**.

[0177] The display panel **300** displays (outputs) information processed by the display device **10**. For example, the display panel **300** may display information on an application run on the screen of the display device **10**, or user interface (UI) or graphic user interface (GUI) information according to the execution screen information. The display panel **300** may include a display layer for displaying images and a sensor electrode layer for sensing a user's touch input. As a result, the display panel **300** may work as one of the input devices **733** providing an input interface between the display device **10** and the user, and also work as one of the output units **750** for providing an output interface between the display device **10** and the user.

[0178] The sound output unit **751** may output source data received from the wireless communications unit **720** or stored in the memory **770** in a call signal reception mode, a talking or recording mode, a voice recognition mode, a broadcast reception mode or the like within the spirit and the scope of the disclosure. The sound output unit **751** may also output a sound signal associated with a function performed in the display device **10** (for example, a call signal reception sound, a message reception sound, etc. within the spirit and the scope of the disclosure) The sound output unit **751** may include a receiver and a speaker. At least one of the receiver and the speaker may be a sound generator that may be incorporated into the display panel **300** and may output sound using a vibration layer which vibrates by the inverse piezoelectric effect, i.e., contracts and expands according to an electrical signal.

[0179] The haptic module **752** may generate a variety of tactile effects sensed by a user. The haptic module **752** may provide a user with vibration as the tactile effect. The intensity and pattern of the vibration generated by the haptic module **752** may be controlled by user selection or setting of the main processor **710**. For example, the haptic module **752** may output different vibrations by synthesizing them or sequentially. In addition to the vibration, the haptic module **752** may generate various types of tactile effects, such as stimulus effects by a pin arrangement vertically moving on a skin, a spraying or suction force through a spraying or suction hole, a graze on a skin, contact of an electrode, and an electrostatic force, or effects of cold or hot feeling reproduced by using a device that may absorb or may generate heat. The haptic module **752** may not only transmit a tactile effect through direct contact, but also may allow a user to feel the tactile effect through a muscle sense such as a finger or an arm.

[0180] The light output unit **753** outputs a signal for notifying occurrence of an event by using light of a light source. Examples of the events occurring in the display device **10** may include message reception, call signal reception, missed call, alarm, schedule notification, email reception, information reception through an application, within the spirit and the scope of the disclosure. The signal output from the light output unit **753** is produced as the display device **10** emits light of a single color or multiple colors through the front or the rear surface. The signal output may be terminated once the display device **10** detects that the user has checked the event.

[0181] The interface **760** serves as a path to various types of external devices electrically connected to the display device **10**. The interface **150** may include at least one of a wired/wireless headset port, an external charger port, a wired/wireless data port, a memory card port, a port for electrically connecting to a device including an identity module, an audio input/output (I/O) port, a video I/O port and an earphone port. In a case that an external device is electrically connected to the interface **760** of the display device **10**, appropriate control associated with the connected external device may be carried out.

[0182] The memory **770** stores data supporting various functions of the display device **10**. The memory **770** may store application programs that may be run on the display device **10**, and data items and instructions for operating the display device **10**. At least some or a predetermined number of the application programs may be downloaded from an external server via wireless communications. The memory **770** may store an application program that may operate the main processor **710**, and may temporally store input/output data, for example, a phone book, a message, a still image, a moving picture, for example therein. The memory **770** may

store haptic data for vibration in different patterns provided to the haptic module **752** and acoustic data regarding various sounds provided to the sound output unit **751**. The memory **770** may include at least one of a flash memory type storage medium, a hard disk type storage medium, a solid state disk (SSD) type storage medium, a silicon disk drive (SDD) type storage medium, a multimedia card micro type storage medium, a card type memory (for example, an SD or XD memory), a random access memory (RAM), a static random access memory (SRMA), a read-only memory (ROM), an electrically erasable programmable read-only memory (EEPROM), a programmable read-only memory (PROM), a magnetic memory, a magnetic disk, and an optical disk.

[0183] The power supply unit **780** may receive a power from an external power source and an internal power source to supply the power to each of elements included in the display device **10** under the control of the main processor **710**. The power supply unit **780** may include the battery **790**. The power supply unit **780** may include a connection port. The connection port may be an example of the interface **760** to which the external charger for supplying power for charging the battery may be electrically connected. Alternatively, the power supply unit **780** may charge the battery **790** in a wireless manner without using the connection port. The battery **790** may receive power from an external wireless power transmitter using at least one of inductive coupling based on the magnetic induction phenomenon or magnetic resonance coupling based on the electromagnetic resonance phenomenon. The battery **790** may be disposed so that it does not overlap the main circuit board **700** in the third direction (z-axis direction). The battery **790** may overlap the battery hole BH of the bracket **600**.

[0184] The bottom cover **900** may be disposed under or below the main circuit board **700** and the battery **790**. The bottom cover **900** may be fastened and fixed to the bracket **600**. The bottom cover **900** may form the exterior of the lower surface of the display device **10**. The bottom cover **900** may include plastic, metal or plastic and metal.

[0185] A second camera hole CMH**2** may be formed or disposed in the bottom cover **900** via which the lower surface of the camera device **731** is exposed. The positions of the camera device **731** and the first and second camera holes CMH**1** and CMH**2** in line with the camera device **731** are not limited to those of an embodiment shown in FIGS. **1** and **2**.

[0186] FIG. **4** is a plan view showing a display panel according to an embodiment. FIG. **5** is a side view showing an example of the display panel of FIG. **4**. FIG. **4** shows a plan view of the display panel **300** with the subsidiary area SBA of the display panel **300** unfolded. FIG. **5** shows a side view of the display panel **300** with the subsidiary area SBA bent and disposed on the lower surface of the display panel **300**.

[0187] Referring to FIGS. **4** and **5**, the display panel **300** may include a substrate SUB, a display layer DISL, a sensor electrode layer SENL, a polarizing film PF, and a bottom panel cover PB.

[0188] The substrate SUB may be made of an insulating material such as glass, quartz and a polymer resin. The substrate SUB may be a rigid substrate or a flexible substrate that may be bent, folded, rolled, and so on.

[0189] The substrate SUB may include the main area MA and the subsidiary area SBA. The main area MA may include a sensor area TSA where sensor electrodes of the sensor electrode layer SENL may be disposed, and a sensor peripheral area TPA which is a peripheral area of the sensor area TSA.

[0190] The subsidiary area SBA may protrude from one side of the main area MA in the second direction (y-axis direction). As shown in FIG. **4**, the length of the subsidiary area SBA in the first direction (x-axis direction) may be smaller than the length of the main area MA in the first direction (x-axis direction). The length of the subsidiary area SBA in the second direction (y-axis direction) may be smaller than the length of the main area MA in the second direction (y-axis direction). It is, however, to be understood that the disclosure is not limited thereto. The subsidiary area SBA may be bent and disposed on the lower surface of the substrate SUB. The subsidiary area SBA may overlap the main area MA in the thickness direction (z-axis direction) of the substrate SUB. The display circuit board **310** and the display driver **320** may be disposed in the subsidiary area SBA.

[0191] The display layer DISL may be disposed on the main area MA of the substrate SUB. The display layer DISL may include pixels and display images. The display layer DISL may include a thin-film transistor layer on which thin-film transistors may be formed or disposed, an emission layer on which light-emitting elements emitting light may be formed, and an encapsulation layer that may encapsulate the emission layer.

[0192] As shown in FIG. **6**, the display layer DISL may be divided into a display area DA and a non-display area NDA. In the display area DA, pixels may be disposed to display images. In the non-display area NDA, no image is displayed. The non-display area NDA may surround or be adjacent to the display area DA. The non-display area NDA may be defined as the area from the outer side of the display area DA to the edge of the display panel **300**. In addition to the pixels, scan lines, data lines, power lines, for example, electrically connected to the pixels may be disposed in the display area DA. In the non-display area NDA, the scan driver that may apply scan signals to scan lines, fan-out lines electrically connecting the data lines with the display driver **320**, for example, may be disposed.

[0193] The sensor electrode layer SENL may be disposed on the display layer DISL. The sensor electrode layer SENL may include sensor electrodes and may sense whether there is a user's touch. The sensor electrode layer SENL may include a first layer in which connection electrodes electrically connecting the driving electrodes among the sensor electrodes may be formed or disposed, and a second layer in which the sensor electrodes may be formed or disposed.

[0194] The sensor electrode layer SENL may include a sensor area TSA and a sensor peripheral area TPA. In the sensor area TSA, sensor electrodes may be disposed to sense a user's touch input. In the sensor peripheral area TPA, no sensor electrodes may be disposed. The sensor peripheral area TPA may surround or be adjacent to the sensor area TSA. The sensor peripheral area TPA may be defined as the area from the outer side of the sensor area TSA to the edge of the display panel **300**. The sensor electrodes, the connection electrodes, and conductive patterns may be disposed in the sensor area TSA. Sensor lines electrically connected to the sensor electrodes may be disposed in the sensor peripheral area TPA.

[0195] The sensor area TSA of the sensor electrode layer SENL may overlap the display area DA of the display layer

DISL. The sensor peripheral area TPA of the sensor electrode layer SENL may overlap the non-display area NDA of the display layer DISL.

[0196] The polarizing film PF may be disposed on the sensor electrode layer SENL. The polarizing film may include a linear polarizer and a retardation film such as a λ/4 (quarter-wave) plate. The phase retardation film may be disposed on the sensor electrode layer SENL, and the linear polarizer may be disposed on the phase retardation film.

[0197] The cover window **100** may be disposed on the polarizing film PF. The cover window **100** may be attached onto the polarizing film PF by a transparent adhesive member such as an optically clear adhesive (OCA) film.

[0198] A bottom panel cover PB may be disposed under or below the display panel **300**. The bottom panel cover PB may be attached to the lower surface of the display panel **300** by an adhesive member. The adhesive member may be a pressure-sensitive adhesive (PSA). The bottom panel cover PB may include at least one of: a light-blocking member for absorbing light incident from outside, a buffer for absorbing external impact, and a heat dissipating member for efficiently discharging heat from the display panel **300**.

[0199] An adhesion member **391** is disposed between the display circuit board **310** and the bottom panel cover PB. The display circuit board **310** may be attached to the bottom panel cover PB using the adhesion member **391**. The adhesion member **391** may be a pressure sensitive adhesive, but is not limited thereto.

[0200] The light-blocking member may be disposed under or below the display panel **300**. The light-blocking member may block the transmission of light to prevent the elements disposed thereunder from being seen from above the display panel **300**, such as the display circuit board **310**. The light-blocking member may include a light-absorbing material such as a black pigment and a black dye.

[0201] The buffer may be disposed under or below the light-blocking member. The buffer absorbs an external impact to prevent the display panel **300** from being damaged. The buffer may be made up of a single layer or multiple layers. For example, the buffer may be formed of a polymer resin such as polyurethane, polycarbonate, polypropylene and polyethylene, or may be formed of a material having elasticity such as a rubber and a sponge obtained by foaming a urethane-based material or an acrylic-based material.

[0202] The heat dissipating member may be disposed under or below the buffer. The heat-dissipating member may include a first heat dissipation layer including graphite or carbon nanotubes, and a second heat dissipation layer formed of a thin metal film such as copper, nickel, ferrite and silver, which may block electromagnetic waves and have high thermal conductivity.

[0203] FIG. **6** is a view showing a layout of a display layer of a display panel according to an embodiment.

[0204] Referring to FIG. **6**, the display layer DISL may include a display area DA including sub-pixels PX, and a non-display area NDA including no sub-pixels PX. The sub-pixels PX, the scan lines SL and the data lines DL may be disposed in the display area DA. The scan lines SL may be arranged or disposed in the first direction (x-axis direction), while the data lines DL may be arranged or disposed in the second direction (y-axis direction) intersecting the first direction (x-axis direction). The scan lines SL may be electrically connected to the scan driver **380** in the non-display area NDA. The data lines DL may be electrically connected to display pads DP through fan-out lines FL in the non-display area NDA.

[0205] Each of the sub-pixels PX may be electrically connected to at least one of the scan lines SL and at least one of the data lines DL. Each of the sub-pixels PX may include thin-film transistors including a driving transistor and at least one switching transistor, a light-emitting element, and a capacitor. In a case that a scan signal is applied from a scan line SL, each of the sub-pixels PX receives a data voltage of a data line DL and supplies a driving current to the light-emitting element according to the data voltage applied to the gate electrode of the driving transistor, so that light may be emitted.

[0206] The non-display area NDA may be the remaining area of the display layer DISL except the display area DA. In the non-display area NDA, the scan driver **380** for applying scan signals to the scan lines SL, scan control lines SCL, fan-out lines FL for electrically connecting the data lines DL with the display pad DP, and sensing pads TP**1** and TP**2** electrically connected to the sensing lines may be disposed.

[0207] The scan driver **380** may be electrically connected to the display pads DP through scan control lines SCL, and accordingly may receive a scan control signal from the display driver **320** disposed on the display circuit board **310**. The scan driver **380** generates scan signals according to a scan control signal and supplies the scan signals to the scan lines SL. The sub-pixels PX to which the data voltages may be supplied may be selected by the scan signals of the scan driver **380** and the data voltages may be supplied to the selected sub-pixels PX. Although the scan driver **380** may be formed or disposed in the non-display area NDA on one outer side, for example, the left outer side of the display area DA in the drawing, the disclosure is not limited thereto. The scan driver **380** may be formed or disposed in the non-display area NDA on two outer sides, for example, the left outer side and the right outer side of the display area DA.

[0208] The display panel **300** may include display pads DP electrically connected to the data lines DL and the scan control lines SCL, and sensing pads TP**1** and TP**2** electrically connected to the sensing lines. A display pad area DPA in which the display pads DP may be disposed may be disposed between a first sensor pad area TPA**1** in which the first sensor pads TP**1** may be disposed and a second sensor pad area TPA**2** in which the second sensor pads TP**2** may be disposed. As shown in FIG. **6**, the display pad area DPA may be disposed at the center of one edge of the display panel **300**, the first sensor pad area TPA**1** may be disposed at the left side of the edge of the display panel **300**, and the second sensor pad area TPA**2** may be disposed on the right side of the edge of the display panel **300**.

[0209] FIG. **7** is a view showing a layout of a sensor electrode layer of a display panel according to an embodiment. FIG. **8** is an enlarged plan view showing a part of the sensor area of FIG. **7**.

[0210] In the example shown in FIG. **7**, the sensor electrodes TE and RE of the sensor electrode layer SENL include two kinds of electrodes, for example, the driving electrodes TE and the sensing electrodes RE, and the mutual capacitive sensing may be carried out by using two layers, for example, driving signals may be applied to the driving electrodes TE and then the voltages charged at the mutual capacitances may be sensed through the sensing electrodes

RE. It is, however, to be understood that the disclosure is not limited thereto. For example, the sensor electrode layer SENL may be driven by mutual capacitance sensing using one layer or by self-capacitance sensing.

[0211] For convenience of illustration, FIG. **7** shows only sensor electrodes TE and RE, dummy patterns DE, sensor lines TL**1**, TL**2** and RL, sensor pads TP**1** and TP**2**, sound electrodes SOE**1** and SOE**2**, sound lines SOL**1** and SOL**2**, and sound pads SP**1** and SP**2**. FIG. **8** is an enlarged plan view of area A of FIG. **7**.

[0212] Referring to FIGS. **7** and **8**, the sensor electrode layer SENL may include the sensor area TSA for sensing a user's touch, and the sensor peripheral area TPA disposed around the sensor area TSA. The sensor area TSA may overlap the display area DA of the display layer DISL, and the sensor peripheral area TPA may overlap the non-display area NDA of the display layer DISL.

[0213] The sensor electrodes TE and RE may be disposed in the sensor area TSA. The sensor electrodes TE and RE may include first sensor electrodes TE and second sensor electrodes RE. In an embodiment shown in FIGS. **7** and **8**, the first sensor electrode is the driving electrode TE, and the second sensor electrode is the sensing electrode RE. In FIGS. **7** and **8**, the driving electrodes TE, the sensing electrodes RE and the dummy patterns DE each have a substantially diamond shape in a case that the driving electrodes TE, the sensing electrodes RE and the dummy patterns DE are viewed from the top, but the disclosure is not limited thereto.

[0214] The sensing electrodes RE may be arranged or disposed in the first direction (x-axis direction) and electrically connected to one another. The driving electrodes TE may be arranged or disposed in the second direction (y-axis direction) crossing or intersecting the first direction (x-axis direction) and may be electrically connected to one another. The driving electrodes TE may be electrically separated from the sensing electrodes RE. The driving electrodes TE may be spaced apart from the sensing electrodes RE. The driving electrodes TE may be arranged or disposed in parallel in the second direction (y-axis direction).

[0215] As shown in FIG. **8**, in order to electrically separate the sensing electrodes RE from the driving electrodes TE at their intersections, the driving electrodes TE adjacent to each other in the second direction (y-axis direction) may be electrically connected through the first connection electrodes BE**1**, and the sensing electrodes RE adjacent to each other in the first direction (x-axis direction) may be electrically connected through second connection electrodes BE**2**. The first connection electrode BE**1** may be formed or disposed on a different layer from the driving electrodes TE and may be electrically connected to the driving electrodes TE through the first contact holes CNT**1**.

[0216] Each of the first connection electrodes BE**1** may be bent at least once. In FIG. **8**, the first connection electrodes BE**1** may be bent in the shape of angle brackets "<" or ">", but the shape of the first connection electrodes BE**1** is not limited thereto. Since the driving electrodes TE adjacent to each other in the second direction (y-axis direction) may be electrically connected by the first connection electrodes BE**1**, even if any of the first connection electrodes BE**1** is disconnected, the driving electrodes TE may still be stably connected with each other. Although two adjacent ones of the driving electrodes TE are may be electrically connected by two first connection electrodes BE**1** in the example shown in FIG. **8**, but the number of first connection electrodes BE**1** is not limited thereto.

[0217] As shown in FIG. **8**, the second connection electrode BE**2** is formed or disposed on the same layer as the sensing electrodes RE and may have a shape extended from the sensing electrodes RE. The sensing electrodes RE and the second connection electrode BE**2** may be formed of the same or similar material.

[0218] By virtue of the first connection electrodes BE**1** and the second connection electrodes BE**2**, the driving electrodes TE adjacent to each other in the second direction (y-axis direction) may be electrically connected to each other, while the driving electrodes TE adjacent to each other the first direction (x-axis direction) may be electrically insulated from each other. In addition, the sensing electrodes RE adjacent to each other in the first direction (x-axis direction) may be electrically connected to each other, while the sensing electrodes RE adjacent to each other in the second direction (y-axis direction) may be electrically insulated from each other. In addition, as the driving electrode TE may be electrically insulated from the sensing electrodes RE, mutual capacitances may be formed or disposed at intersections of the driving electrodes TE and the sensing electrodes RE.

[0219] The dummy patterns DE may be electrically separated from the driving electrodes TE and the sensing electrodes RE. The driving electrodes TE, the sensing electrodes RE and the dummy patterns DE may be disposed apart from each other. The dummy patterns DE may be surrounded by or may be adjacent to the driving electrodes TE and the sensing electrodes RE, respectively. Each of the dummy patterns DE may be electrically floated.

[0220] The parasitic capacitance between the second electrode of the emission layer EML and the driving electrode TE or the sensing electrode RE may be reduced due to the dummy patterns DE. In a case that the parasitic capacitance is reduced, there is an advantage in that the mutual capacitance between the driving electrode TE and the sensing electrode RE may be charged more quickly. However, as the areas of the driving electrode TE and the sensing electrode RE may be reduced due to the dummy patterns DE, the mutual capacitance between the driving electrode TE and the sensing electrode RE may be reduced. As a result, the voltage charged in the mutual capacitance may be easily affected by noise. Therefore, the area of the dummy patterns DE may be determined by the trade-off between the parasitic capacitance and the mutual capacitance.

[0221] The sensor lines TL**1**, TL**2** and RL may be disposed in the sensor peripheral area TPA. The sensor lines TL**1**, TL**2** and RL may include sensing lines RL electrically connected to the sensing electrodes RE, and first driving lines TL**1** and second driving lines TL**2** electrically connected to the driving electrodes TE.

[0222] The sensing electrodes RE disposed on one side of the sensor area TSA may be electrically connected to the sensing lines RL. For example, some or a predetermined number of the sensing electrodes RE electrically connected in the first direction (x-axis direction) that may be disposed at the right end may be electrically connected to the sensing lines RL as shown in FIG. **7**. The sensing lines RL may be electrically connected to second sensor pads TP**2**. Therefore, the sensor driver **330** may be electrically connected to the sensing electrodes RE.

[0223] The driving electrodes TE disposed on one side of the sensor area TSA may be electrically connected to the first driving lines TL**1**, while the driving electrodes TE disposed on the other side of the sensor area TSA may be electrically connected to the second driving lines TL**2**. For example, some or a predetermined number of the driving electrodes TE electrically connected to one another in the second direction (y-axis direction) on the lowermost side may be electrically connected to the first driving line TL**1**, while some or a predetermined number of the driving electrodes TE disposed on the uppermost side may be electrically connected to the second driving line TL**2**, as shown in FIG. **7**. The second driving lines TL**2** may be connected to the driving electrodes TE on the upper side of the sensor area TSA via the left outer side of the sensor area TSA. The first driving lines TL**1** and the second driving lines TL**2** may be connected to the first sensor pads TP**1**. Therefore, the sensor driver **330** may be electrically connected to the driving electrodes TE.

[0224] Sound units SU may be disposed in the sensor area TSA, and a first sound line SOL**1** and a second sound line SOL**2** may be disposed in the sensor peripheral area TPA. The sound units SU may overlap the driving electrodes TE, the sensing electrodes RE, and the dummy patterns DE. The sound units SU may be spaced apart from one another.

[0225] Each of the sound units SU may include a first sound electrode SOE**1**, a second sound electrode SOE**2**, and a vibration layer in contact with the first sound electrode SOE**1** and the second sound electrode SOE**2**. The vibration layer may be disposed in the sensor area TSA wholly or partially. For example, in a case that the vibration layer is disposed in a part of the sensor area TSA, it may be disposed in the areas where the sound units SU may be disposed in the sensor area TSA.

[0226] The vibration layer may include an electroactive polymer that may be deformed according to a first sound driving voltage applied to the first sound electrode SOE**1** and a second sound driving voltage applied to the second sound electrode SOE**2**. Since the electroactive polymer is disposed in the sensor area TSA overlapping the display area DA of the display panel **300**, it should be able to transmit light. For example, the electroactive polymer may include a ferroelectric polymer such as polyvinylidene fluoride (PVDF) and poly(vinylidenefluoride-co-trifluoroethylene (P(VDF-TrFE)). The electroactive polymer may include piezoelectric particles such as ZnO and $BaTiO_3$ to increase the piezoelectric effect. The vibration layer may be mechanically deformed by the inverse piezoelectric effect in a case that the first sound driving voltage is applied to the first sound electrode SOE**1** and the second sound driving voltage is applied to the second sound electrode SOE**2**. In addition, in a case that the vibration layer is mechanically deformed, it may generate voltages on the first sound electrode SOE**1** and the second sound electrode SOE**2** by the piezoelectric effect. Each of the sound units SU may output sound by vibrating the vibration layer by the inverse piezoelectric effect.

[0227] The first sound electrodes SOE**1** of the sound units SU may be electrically separated from each other. As shown in FIG. **7**, each of the first sound electrodes SOE**1** of the sound units SU may be electrically connected to the first sound line SOL**1**. The second sound electrodes SOE**2** of the sound units SU may be electrically separated from each other. As shown in FIG. **7**, each of the second sound electrodes SOE**2** of the sound units SU may be electrically connected to the second sound line SOL**2**.

[0228] Alternatively, the first sound electrodes SOE**1** of some or a predetermined number of the sound units SU may be electrically connected with one another. For example, the first sound electrodes SOE**1** of the sound units SU disposed on one side of the sensor area TSA may be electrically connected to one first sound line SOL**1**. The first sound electrodes SOE**1** of the sound units SU disposed on the other side of the sensor area TSA may be electrically connected to another first sound line SOL**1**. In addition, the second sound electrodes SOE**2** of some or a predetermined number of the sound units SU may be electrically connected with one another. For example, the second sound electrodes SOE**2** of the sound units SU disposed on one side of the sensor area TSA may be electrically connected to one second sound line SOL**2**. The second sound electrodes SOE**2** of the sound units SU disposed on the other side of the sensor area TSA may be electrically connected to another second sound line SOL**2**.

[0229] In each of the sound units SU, the first sound electrode SOE**1** may be spaced apart from the second sound electrode SOE**2**. In each of the sound units SU, the first sound electrode SOE**1** may be electrically separated from the second sound electrode SOE**2**.

[0230] Each of the first sound electrodes SOE**1** may include a first sound stem electrode SSE**1** and first sound branch electrodes SBE**1**. The first sound stem electrode SSE**1** may be extended in a direction DRN. The first sound stem electrode SSE**1** may be electrically connected to the first sound connection line SOL**1**. The first sound branch electrodes SBE**1** may branch off from the first sound stem electrode SSE**1** and may be extended in other direction DRT intersecting the direction DRN.

[0231] Each of the second sound electrodes SOE**2** may include a second sound stem electrode SSE**2** and second sound branch electrodes SBE**2**. The second sound stem electrode SSE**2** may be extended in the direction DRN and may be in parallel to the first sound stem electrode SSE**1**. The second sound stem electrode SSE**2** may be electrically connected to the second sound connection line SOL**2**. The second sound branch electrodes SBE**2** may branch off from the second sound stem electrode SSE**2** and may be extended in the direction DRT. The first sound branch electrodes SBE**1** and the second sound branch electrodes SBE**2** may be alternately arranged or disposed in the direction DRN. As an example, in the direction DRN, they may be arranged or disposed in the order of the first sound branch electrode SBE**1**, the second sound branch electrode SBE**2**, the first sound branch electrode SBE**1**, the second sound branch electrode SBE**2**, and so on.

[0232] Shielding electrodes SHE may be disposed to surround or be adjacent to the sound unit SU. The shielding electrodes SHE may be electrically connected to at least one of the sound pads SP**1** and SP**2** through a shielding line. Accordingly, the shielding electrodes SHE may be electrically connected to the sound driver **340**. The sound driver **340** may apply a shielding voltage, such as a ground voltage, to the shielding electrodes SHE. Thanks to the shielding electrodes SHE, it is possible to reduce the vibration or sound generated by a sound unit SU from affecting the vibration or sound generated by another sound unit SU.

[0233] The first sound electrodes SOE**1** and the second sound electrodes SOE**2** of the sound units SU disposed on

one side of the sensor area TSA may be electrically connected to the first sound lines SOL**1** and the second sound lines SOL**2** disposed more to the outside. The first sound lines SOL**1** and the second sound lines SOL**2** may be electrically connected to the first sound pads SP**1** disposed in the first sensor pad area TPA**1**. The first sound electrodes SOE**1** and the second sound electrodes SOE**2** of the sound units SU disposed on another side of the sensor area TSA may be electrically connected to the first sound lines SOL**1** and the second sound lines SOL**2** disposed more to the outside. The first sound lines SOL**1** and the second sound lines SOL**2** may be electrically connected to the second sound pads SP**2** disposed in the second sensor pad area TPA**2**. Therefore, the sound driver **340** may be electrically connected to the first sound electrodes SOE**1** and the second sound electrodes SOE**2**.

[0234] As shown in FIG. **7**, in each of the sound units SU, a first sound driving voltage may be applied to the first sound electrode SOE**1** through the first sound line SOL**1**, and a second sound driving voltage may be applied to the second sound electrode SOE**2** through the second sound line SOL**2**. Accordingly, each of the sound units SU may drive a vibration layer PEL in contact with the first sound electrode SOE**1** and the second sound electrode SOE**2** by the first sound driving voltage and the second sound driving voltage, thereby outputting sound. The vibration layer PEL of each of the sound units SU will be described in detail later with reference to FIG. **11**.

[0235] By way of example, in a case that the sensor electrode layer SENL is formed or disposed directly on the encapsulation layer TFEL as shown in FIG. **11**, the distance between the second electrode of the emission layer EML and each of the driving electrode TE, the sensing electrode RE, the dummy pattern DE, the first connection electrode BE**1**, the second connection electrode BE**2**, the first sound electrode SOE**1**, the second sound electrode SOE**2** and the shielding electrode SHE may be closed. Accordingly, a large parasitic capacitance may be formed between the second electrode of the emission layer EML and each of them. Such parasitic capacitance may be proportional to the area where the second electrode of the emission layer EML overlaps with each of the driving electrode TE, the sensing electrode RE, the dummy pattern DE, the first connection electrode BE**1**, the second connection electrode BE**2**, the first sound electrode SOE**1**, the second sound electrode SOE**2** and the shielding electrode SHE. Accordingly, in order to reduce such parasitic capacitance, the driving electrode TE, the sensing electrode RE, the dummy pattern DE, the first connection electrode BE**1**, the second connection electrode BE**2**, the first sound electrode SOE**1**, the second sound electrode SOE**2** and the shielding electrode SHE may be formed in a mesh topology when viewed from the top.

[0236] FIG. **9** is a view showing an example of the sensor driver electrically connected to the driving electrodes and the sensing electrodes of FIG. **7**.

[0237] For convenience of illustration, FIG. **9** shows only driving electrodes TE arranged or disposed in a row and electrically connected to each other in the second direction (y-axis direction), and sensing electrodes RE arranged or disposed in a row and electrically connected to each other in the first direction (x-axis direction).

[0238] Referring to FIG. **9**, the sensor driver **330** may include a driving signal output **331**, a first sensor detector **332**, and a first analog-to-digital converter **333**.

[0239] The driving signal output **331** may output a touch driving signal TD to the driving electrodes TE through a first driving line TL**1**, and the touch driving signal TD to the driving electrodes TE through a second driving line TL**2**. The touch driving signal TD may include pulses. The height of the touch driving signal may be represented as VD.

[0240] The driving signal output **331** may output the touch driving signal TD to the driving lines TL**1** and TL**2** in a predetermined order. For example, the driving signal output **331** may output the touch driving signal TD sequentially from the driving electrodes TE disposed on the left side of the touch sensing area TSA of FIG. **7** to the driving electrodes TE disposed on the right side of the touch sensing area TSA.

[0241] The first sensor detector **332** detects a voltage charged in a first mutual capacitance Cm**1** through the sensing line RL electrically connected to the sensing electrodes RE. As shown in FIG. **8**, the first mutual capacitance Cm**1** may be formed or disposed between the driving electrode TE and the sensing electrode RE.

[0242] The first sensor detector **332** may include a first operational amplifier OP**1**, a first feedback capacitor Cfb**1**, and a first reset switch RSW**1**. The first operational amplifier OP**1** may include a first input terminal (−), a second input terminal (+), and an output terminal (out). The first input terminal (−) of the first operational amplifier OP**1** may be electrically connected to the sensing line RL, the initialization voltage VREF may be supplied to the second input terminal (+), and the output terminal (out) of the first operational amplifier OP**1** may be electrically connected to a first storage capacitor Cs**1**. The first storage capacitor may be electrically connected between the output terminal (out) of the first operational amplifier OP**1** and the ground to store the output voltage Vout**1** of the first operational amplifier OP**1**. The first feedback capacitor Cfb**1** and the first reset switch RSW**1** may be electrically connected in parallel between the first input terminal (−) and the output terminal (out) of the first operational amplifier OP**1**. The first reset switch RSW**1** controls the connection of both ends of the first feedback capacitor Cfb**1**. When the first reset switch RSW**1** is turned on such that both ends of the first feedback capacitor Cfb**1** may be electrically connected, the first feedback capacitor Cfb**1** may be reset.

[0243] The output voltage Vout**1** of the first operational amplifier OP**1** may be defined as in Equation 1 below:

$$Vout1 = \frac{Cm1 \times Vt1}{Cfb1} \quad \text{[Equation 1]}$$

where Vout**1** denotes the output voltage of the first operational amplifier OP**1**, Cm**1** denotes the first mutual capacitance, Cfb**1** denotes the capacitance of the first feedback capacitor, and Vt**1** denotes the voltage charged in the first mutual capacitance Cm**1**.

[0244] The first analog-to-digital converter **333** may convert the output voltage Vout**1** stored in the first storage capacitor into first digital data and output the first digital data.

[0245] As shown in FIG. **9**, the sensor electrode layer SENL may determine whether there is a user's touch by sensing voltages charged in the first mutual capacitances Cm**1**.

[0246] FIG. **10** is an enlarged plan view showing the driving electrodes, the sensing electrodes, the first connection electrodes, the first sound electrode and the shielding electrode of FIG. **8** in detail. FIG. **10** is an enlarged plan view of area A-**1** of FIG. **8**.

[0247] Referring to FIG. **10**, the driving electrodes TE, the sensing electrodes RE, the first connection electrodes BE**1**, the second connection electrodes BE**2**, the first sound stem electrode SSE**1**, the second sound branch electrodes SBE**2** and the shielding electrode SHE may be formed in a mesh topology when viewed from the top.

[0248] The driving electrodes TE, the sensing electrodes RE, the dummy patterns DE and the second connection electrodes BE**2** may be formed or disposed in the same layer, and thus they may be spaced apart from each other. There may be a gap between the driving electrode TE and the sensing electrode RE, between the driving electrode TE and the second connection electrode BE**2**, between the driving electrode TE and the dummy pattern DE, and between the sensing electrode RE and the dummy pattern DE. For convenience of illustration, the boundary between the driving electrode TE and the sensing electrode RE, the boundary between the driving electrode TE and the second connection electrode BE**2**, and the boundary between the sensing electrode RE and the second connection electrode BE**2** may be indicated by dashed lines in FIG. **10**.

[0249] Since the first connection electrodes BE**1**, the first sound stem electrode SSE**1**, the second sound branch electrode SBE**2** and the shielding electrode SHE may be formed or disposed on the same layer, they may be spaced apart from one another.

[0250] The first connection electrodes BE**1** may be electrically connected to the driving electrodes TE through the first contact holes CNT**1**, respectively. One end of each of the first connection electrodes BE**1** may be electrically connected to one of the driving electrodes TE adjacent to each other in the second direction (y-axis direction) through a first contact hole CNT**1**. The other end of each of the first connection electrodes BE**1** may be electrically connected to another one of the driving electrodes TE adjacent to each other in the second direction (y-axis direction) through a first contact hole CNT**1**. The first connection electrode BE**1** may overlap the driving electrodes TE and the sensing electrode RE in the third direction (z-axis direction). Alternatively, the first connection electrode BE**1** may overlap the second connection electrode BE**2** instead of the sensing electrode RE in the third direction (z-axis direction). Alternatively, the first connection electrode BE**1** may overlap the second connection electrode BE**2** as well as the sensing electrode RE in the third direction (z-axis direction). Since the first connection electrode BE**1** is formed or disposed on a different layer from the driving electrodes TE, the sensing electrodes RE and the second connection electrode BE**2**, it is possible to prevent a short-circuit from being created in the sensing electrode RE and/or the second connection electrode BE**2** even though they overlap the sensing electrode RE and/or the second connection electrode BE**2**.

[0251] The second connection electrode BE**2** may be disposed between the sensing electrodes RE. The second connection electrode BE**2** may be formed or disposed on the same layer as the sensing electrodes RE and may be extended from each of the sensing electrodes RE. Therefore, the second connection electrode BE**2** may be electrically connected to the sensing electrodes RE without any additional contact hole.

[0252] The first sound stem electrode SSE**1** may overlap at least one driving electrode TE and at least one sensing electrode RE in the third direction (z-axis direction). In addition, the first sound stem electrode SSE**1** may overlap the at least one dummy pattern DE in the third direction (z-axis direction) as shown in FIG. **8**.

[0253] The second sound branch electrode SOE**2** may overlap at least one driving electrode TE and at least one sensing electrode RE in the third direction (z-axis direction). Alternatively, the second sound branch electrode SOE**2** may overlap one of at least one driving electrode TE and at least one sensing electrode RE in the third direction (z-axis direction). In addition, the second sound electrode SOE**2** may overlap the at least one dummy pattern DE in the third direction (z-axis direction) as shown in FIG. **8**.

[0254] Sub-pixels R, G and B may include a first sub-pixel R emitting a first color, a second sub-pixel G emitting a second color, and a third sub-pixel B emitting a third color. Although the first sub-pixel R is a red sub-pixel, the second sub-pixel G is a green sub-pixel and the third sub-pixel B is a blue sub-pixel in the example shown in FIG. **10**, the disclosure is not limited thereto. Although the first sub-pixel R, the second sub-pixel G and the third sub-pixel B have a substantially quadrangular shape in a case that the first sub-pixel R, the second sub-pixel G and the third sub-pixel B are viewed from the top in the example shown in FIG. **10**, the disclosure is not limited thereto. For example, the first sub-pixel R, the second sub-pixel G and the third sub-pixel B may have a substantially polygonal shape other than a substantially quadrangular, or a substantially circular or substantially elliptical shape in a case that the first sub-pixel R, the second sub-pixel G and the third sub-pixel B are viewed from the top. In addition, although FIG. **10** illustrates that the third sub-pixel B has the largest size while the second sub-pixel G has the smallest size, the disclosure is not limited thereto.

[0255] A pixel PX refers to a group of sub-pixels that may represent grayscales. In the example shown in FIG. **10**, a pixel PX may include a first sub-pixel R, two second sub-pixels G and a third sub-pixel B. It is, however, to be understood that the disclosure is not limited thereto. For example, a pixel PX may include a first sub-pixel, a second sub-pixel, and a third sub-pixel.

[0256] Because the driving electrodes TE, the sensing electrodes RE, the first connection electrodes BE**1**, the second connection electrodes BE**2**, the first sound stem electrode SSE**1**, the second sound branch electrode SBE**2** and the shielding electrode SHE may be formed in a mesh topology when viewed from the top, the sub-pixels R, G and B may not overlap the driving electrodes TE, the sensing electrodes RE, the first connection electrodes BE**1**, the second connection electrodes BE**2**, the first sound stem electrode SSE**1**, the second sound branch electrode SBE**2**, and the shielding electrode SHE. Accordingly, it is possible to prevent that the luminance of the light emitted from the sub-pixels R, G and B is reduced as it is hidden by the driving electrodes TE, the sensing electrodes RE, the first connection electrodes BE**1**, the second connection electrodes BE**2**, the first sound stem electrode SSE**1**, the second sound branch electrode SBE**2** and the shielding electrode SHE.

[0257] FIG. **11** is a schematic cross-sectional view taken along line I-I' of FIG. **10**. FIG. **12** is a schematic cross-sectional view taken along line II-II' of FIG. **10**.

[0258] Referring to FIGS. **11** and **12**, the display layer DISL including a first buffer layer BF**1**, a thin-film transistor layer TFTL, an emission layer EML and an encapsulation layer TFEL may be disposed on the substrate SUB.

[0259] The first buffer layer BF**1** may be formed or disposed on a surface of the substrate SUB. The first buffer layer BF**1** may be formed or disposed on a surface of the substrate SUB in order to protect the thin-film transistors **120** and organic emitting layer **172** of the light-emitting element layer EML from moisture that may likely permeate through the substrate SUB. The first buffer layer BF**1** may be made up of multiple inorganic layers sequentially stacked on one another. For example, the first buffer layer BF**1** may be made up of multiple layers in which one or more inorganic layers of a silicon nitride layer, a silicon oxynitride layer, a silicon oxide layer, a titanium oxide layer and an aluminum oxide layer may be alternately stacked on one another. The first buffer layer BF**1** may be eliminated.

[0260] The thin-film transistor layer TFTL may include thin-film transistors **120**, a gate insulating layer **130**, an interlayer dielectric layer **140**, a protective layer **150**, and a planarization layer **160**.

[0261] The thin-film transistors **120** may be formed or disposed on the first buffer layer BF**1**. Each of the thin-film transistor **120** may include an activate layer **121**, a gate electrode **122**, a source electrode **123**, and a drain electrode **124**. In FIG. **11**, the thin-film transistors **120** may be implemented as top-gate transistors in which the gate electrode **122** may be located or disposed above the active layer **121**. It is, however, to be understood that the disclosure is not limited thereto. The thin-film transistors **120** may be implemented as bottom-gate transistors in which the gate electrode **122** may be located or disposed below the active layer **121**, or as double-gate transistors in which the gate electrodes **122** may be disposed above and below the active layer **121**.

[0262] The active layer **121** may be formed or disposed on the first buffer layer BF**1**. The active layer **121** may include polycrystalline silicon, single crystal silicon, low-temperature polycrystalline silicon, amorphous silicon, or an oxide semiconductor. The oxide semiconductor may include, for example, a binary compound (ABx), a ternary compound (ABxCy) and a quaternary compound (ABxCyDz) containing indium, zinc, gallium, tin, titanium, aluminum, hafnium (Hf), zirconium (Zr), magnesium (Mg), for example. For example, the active layer **121** may include an oxide including indium, tin, and titanium (ITZO) or an oxide including indium, gallium and tin (IGZO). A light-blocking layer for blocking external light incident on the active layer **121** may be formed or disposed between the buffer layer and the active layer **121**.

[0263] The gate insulating layer **130** may be formed or disposed on the active layer **121**. The gate insulating layer **130** may be formed or disposed only in a region overlapping with the gate electrode **122** in the third direction (z-axis direction) as shown in FIG. **11**, but the disclosure is not limited thereto. The gate insulating layer **130** may be formed of an inorganic layer, for example, a silicon nitride layer, a silicon oxynitride layer, a silicon oxide layer, a titanium oxide layer, or an aluminum oxide layer.

[0264] The gate electrodes **122** may be formed or disposed on the gate insulating layer **130**. The gate electrode **122** may overlap the active layer **121** in the third direction (z-axis direction). The gate electrode **122** may be made up of a single layer or multiple layers of one of molybdenum (Mo), aluminum (Al), chromium (Cr), gold (Au), titanium (Ti), nickel (Ni), neodymium (Nd) and copper (Cu) or an alloy thereof.

[0265] A first interlayer dielectric layer **141** may be formed or disposed over the gate electrode **122** and the gate line. The first interlayer dielectric layer **141** may be formed of an inorganic layer, for example, a silicon nitride layer, a silicon oxynitride layer, a silicon oxide layer, a titanium oxide layer, or an aluminum oxide layer.

[0266] A capacitor electrode **125** may be formed or disposed on the first interlayer dielectric layer **141**. The capacitor electrode **125** may overlap the gate electrode **122** in the third direction (z-axis direction). The capacitor electrode **125** may be made up of a single layer or multiple layers of one of molybdenum (Mo), aluminum (Al), chromium (Cr), gold (Au), titanium (Ti), nickel (Ni), neodymium (Nd) and copper (Cu) or an alloy thereof.

[0267] A second interlayer dielectric layer **142** may be formed or disposed over the capacitor electrode **125**. The second interlayer dielectric layer **142** may be formed of an inorganic layer, for example, a silicon nitride layer, a silicon oxynitride layer, a silicon oxide layer, a titanium oxide layer, or an aluminum oxide layer.

[0268] The source electrode **123** and the drain electrode **124** may be formed or disposed on the second interlayer dielectric layer **142**. Each of the source electrode **123** and the drain electrode **124** may be electrically connected to the active layer **121** through a contact hole penetrating through the interlayer dielectric layer **140**. The source electrode **123** and the drain electrode may be made up of a single layer or multiple layers of one of molybdenum (Mo), aluminum (Al), chromium (Cr), gold (Au), titanium (Ti), nickel (Ni), neodymium (Nd) and copper (Cu) or an alloy thereof.

[0269] The protective layer **150** may be formed or disposed on the source electrode **213** and the drain electrode **124** in order to insulate the thin-film transistors **120**. The protective layer **150** may be formed of an inorganic layer, for example, a silicon nitride layer, a silicon oxynitride layer, a silicon oxide layer, a titanium oxide layer, or an aluminum oxide layer.

[0270] The planarization layer **160** may be formed or disposed on the protective layer **150** to provide a flat surface over the step differences of the thin-film transistors **120**. The planarization layer **160** may be formed of an organic layer such as an acryl resin, an epoxy resin, a phenolic resin, a polyamide resin and a polyimide resin.

[0271] The emission layer EML may be formed or disposed on the thin-film transistor layer TFTL. The emission layer EML may include light-emitting elements **170** and a bank **180**.

[0272] The light-emitting elements **170** and the pixel-defining layer **180** may be formed or disposed on the planarization layer **160**. Each of the light-emitting elements **170** may include a first electrode **171**, an organic emitting layer **172**, and a second electrode **173**. In FIG. **11**, the light-emitting elements **170** may be organic light-emitting diodes including the organic emitting layer **172**.

[0273] The first electrode **171** may be formed or disposed on the planarization layer **160**. Although the first electrode

171 may be electrically connected to the drain electrode **124** of the thin-film transistor **120** through the contact hole penetrating through the protective layer **150** and the planarization layer **160** in the example shown in FIG. **11**, the disclosure is not limited thereto. The first electrode **171** may be electrically connected to the source electrode **123** of the thin-film transistor **120** through the contact hole penetrating through the protective layer **150** and the planarization layer **160**.

[0274] In the top-emission organic light-emitting diode that light exits from the organic emitting layer **172** toward the second electrode **173**, the first electrode **171** may be made up of a single layer of molybdenum (Mo), titanium (Ti), copper (Cu) or aluminum (Al), or may be made of a metal material having a high reflectivity such as a stack structure of aluminum and titanium (Ti/Al/Ti), a stack structure of aluminum and ITO (ITO/AI/ITO), an APC alloy and a stack structure of APC alloy and ITO (ITO/APC/ITO). The APC alloy is an alloy of silver (Ag), palladium (Pd) and copper (Cu).

[0275] In the bottom-emission organic light-emitting diode that light exits from the organic emitting layer **172** toward the first electrode **173**, the first electrode **171** may be formed of a transparent conductive material (TCP) such as ITO and IZO that may transmit light, or a semi-transmissive conductive material such as magnesium (Mg), silver (Ag) and an alloy of magnesium (Mg) and silver (Ag). In a case that the first electrode **171** is made of a semi-transmissive metal material, the light extraction efficiency may be increased by using microcavities.

[0276] The bank **180** may partition the first electrode **171** on the planarization layer **160** in order to define each of the sub-pixels PX. The bank **180** may be formed or disposed to cover or overlap the edge of the first electrode **171**. The bank **180** may be formed of an organic layer such as an acryl resin, an epoxy resin, a phenolic resin, a polyamide resin and a polyimide resin.

[0277] In each of the sub-pixels PX, the first electrode **171**, the organic emitting layer **172** and the second electrode **173** so that holes from the first electrode **171** and electrons from the second electrode **173** may be combined with each other in the organic emitting layer **172** to emit light.

[0278] The organic emitting layer **172** may be formed or disposed on the first electrode **171** and the pixel-defining layer **180**. The organic emitting layer **172** may include an organic material and emit light of a certain color. For example, the organic emitting layer **172** may include a hole transporting layer, an organic material layer, and an electron transporting layer. In the example shown in FIG. **11**, the organic emitting layer **172** of the first sub-pixel R may emit red light, the organic emitting layer **172** of the second sub-pixel G may emit green light, and the organic emitting layer **172** of the third sub-pixel B may emit blue light.

[0279] Alternatively, the organic emitting layers **172** of the sub-pixels PX may be formed as a single layer to emit white light, ultraviolet light, or blue light. In such case, the first sub-pixel R may overlap a first color filter transmitting red light in the third direction (z-axis direction), the second sub-pixel G may overlap a second color filter transmitting green light in the third direction (z-axis direction), and the third sub-pixel B may overlap a third color filter transmitting blue light in the third direction (z-axis direction). The first color filter, the second color filter and the third color filter may be disposed on the encapsulation layer TFEL. In addition, the first sub-pixel R may overlap a first wavelength converting layer converting blue light into red light in the third direction (z-axis direction), the second sub-pixel G may overlap a second wavelength converting layer converting blue light into green light in the third direction (z-axis direction), and the third sub-pixel B may overlap a transmitting layer outputting blue light as it is in the third direction (z-axis direction). The first wavelength converting layer, the second wavelength converting layer and the third wavelength converting layer may be disposed on the encapsulation layer TFEL. For example, the first wavelength converting layer may be disposed between the encapsulation layer TFEL and the first color filter, the second wavelength converting layer may be disposed between the encapsulation layer TFEL and the second color filter, and the third wavelength converting layer may be disposed between the encapsulation layer TFEL and the third color filter.

[0280] The second electrode **173** may be formed or disposed on the organic emitting layer **172**. The second electrode **173** may be formed or disposed to cover or overlap the organic emitting layer **172**. The second electrode **173** may be a common layer formed or disposed across the sub-pixels PX. A capping layer may be formed or disposed on the second electrode **173**.

[0281] In the top-emission organic light-emitting diode, the second electrode **173** may be formed of a transparent conductive material (TCP) such as ITO and IZO that may transmit light, or a semi-transmissive conductive material such as magnesium (Mg), silver (Ag) and an alloy of magnesium (Mg) and silver (Ag). In a case that the second electrode **173** is formed of a semi-transmissive conductive material, the light extraction efficiency may be increased by using microcavities.

[0282] In the bottom-emission organic light-emitting diode, the second electrode **173** may be made up of a single layer of molybdenum (Mo), titanium (Ti), copper (Cu) or aluminum (Al), or may be made of a metal material having a high reflectivity such as a stack structure of aluminum and titanium (Ti/Al/Ti), a stack structure of aluminum and ITO (ITO/AI/ITO), an APC alloy and a stack structure of APC alloy and ITO (ITO/APC/ITO).

[0283] The encapsulation layer TFEL may be formed or disposed on the emission layer EML. The encapsulation layer TFEL is disposed on the second electrode **173**. The encapsulation layer TFEL may include at least one inorganic layer to prevent oxygen or moisture from permeating into the organic emitting layer **172** and the second electrode **173**. In addition, the encapsulation layer TFEL may include at least one organic layer to protect the light-emitting element layer EML from foreign substances such as dust. For example, the encapsulation layer TFEL may include a first inorganic layer disposed on the second electrode **173**, an organic layer disposed on the first inorganic layer, and a second inorganic layer disposed on the organic layer. The first inorganic layer and the second inorganic layer may be formed of, but is not limited to, a silicon nitride layer, a silicon oxynitride layer, a silicon oxide layer, a titanium oxide layer, or an aluminum oxide layer. The organic layer may be formed of, but is not limited to, an acryl resin, an epoxy resin, a phenolic resin, a polyamide resin and a polyimide resin.

[0284] The sensor electrode layer SENL may be formed or disposed on the encapsulation layer TFEL. The sensor electrode layer SENL may include a second buffer layer

BF2, driving electrodes TE, sensing electrodes RE, first sound electrodes SOE1, second sound electrodes SOE2, shielding electrodes SHE, dummy patterns DE, first connection electrodes BE1, second connection electrodes BE2, first driving lines TL1, second driving lines TL2, sensing lines RL, first sound lines SOL1, second sound lines SOL2, a vibration layer PEL, and a first sensor insulating layer TINS1. FIGS. **11** and **12** show only the driving electrode TE, the sensing electrode RE, the first connection electrodes BE1, the first sound stem electrode SSE1 of the first sound electrode SOE1, and the shielding electrode SHE.

[0285] The second buffer layer BF2 may be formed of an inorganic layer, for example, a silicon nitride layer, a silicon oxynitride layer, a silicon oxide layer, a titanium oxide layer, or an aluminum oxide layer.

[0286] The first connection electrodes BE1, the first sound stem electrode SSE1 of the first sound electrode SOE1 and the shielding electrodes SHE may be formed or disposed on the second buffer layer BF2. The first sound branch electrodes SBE1 of the first sound electrode SOE1, and the second sound stem electrodes SSE2 and the second sound branch electrodes SBE2 of the second sound electrode SOE2 may also be formed or disposed on the second buffer layer BF2.

[0287] The first connection electrodes BE1, the first sound stem electrode SSE1 and the first sound branch electrodes SBE1 of the first sound electrode SOE1, and the second sound stem electrode SSE2 and the second sound branch electrodes SBE2 of the second sound electrode SOE2, and the shielding electrode SHE may be disposed to overlap the bank **180** in the third direction (z-axis direction). The first connection electrodes BE1, the first sound stem electrode SSE1 and the first sound branch electrodes SBE1 of the first sound electrode SOE1, and the second sound stem electrode SSE2 and the second sound branch electrodes SBE2 of the second sound electrode SOE2, and the shielding electrode SHE may be made up of a single layer of molybdenum (Mo), titanium (Ti), copper (Cu) or aluminum (Al), or may be made of a metal material having a high reflectivity such as a stack structure of aluminum and titanium (Ti/Al/Ti), a stack structure of aluminum and ITO (ITO/Al/ITO), an APC alloy and a stack structure of APC alloy and ITO (ITO/APC/ITO).

[0288] The vibration layer PEL may be formed or disposed on the first connection electrodes BE1, the first sound stem electrode SSE1 and the first sound branch electrodes SBE1 of the first sound electrode SOE1, the second sound stem electrode SSE2 and the second sound branch electrodes SBE2 of the second sound electrode SOE2, and the shielding electrode SHE. The vibration layer PEL may include an electroactive polymer (piezoelectric polymer) that may be deformed according to a first sound driving voltage applied to the first sound electrode SOE1 and a second sound driving voltage applied to the second sound electrode SOE2 or a non-piezoelectric polymer. Since the electroactive polymer is disposed in the sensor area TSA overlapping the display area DA of the display panel **300**, it should be able to transmit light. For example, the electroactive polymer may include a ferroelectric polymer such as polyvinylidene fluoride (PVDF) and poly(vinylidenefluoride-co-trifluoroethylene (P(VDF-TrFE)). Non-piezoelectric polymers may include polyester and urethane.

[0289] The vibration layer PEL may be formed or disposed on the first connection electrodes BE1, the first sound stem electrode SSE1 and the first sound branch electrodes SBE1 of the first sound electrode SOE1, the second sound stem electrode SSE2 and the second sound branch electrodes SBE2 of the second sound electrode SOE2, the shielding electrode SHE and the second buffer layer BF2 by printing, doctor blade coating, spraying, or spin coating. It is desired that the vibration layer PEL has a large dielectric constant, a small loss tangent over frequency, and a small leakage current. To this end, it is necessary to reduce the thickness of the vibration layer PEL or increase the area of the vibration layer PEL, and the vibration layer PEL may include piezoelectric particles or piezoelectric powders having a high dielectric constant. For example, the piezoelectric particles or piezoelectric powders may include ZnO, $PbTiO_3$, $BaTiO_3$, $PZT(Pb(TiZr)O_3)$ having a high piezoelectric constant, or a lead-free system such as BNT and SBT. The piezoelectric particles or the piezoelectric powders may be evenly distributed on the vibration layer PEL, and the size of the piezoelectric particles or the piezoelectric powders may be approximately 2 μm or less.

[0290] In a case that the vibration layer PEL may include PVDF, it may be formed using a copolymer in which an additive such as HFP, CTFE and PTFE is added to the PVDF. Alternatively, the vibration layer PEL may be formed using a copolymer in which the additive is added to vinylidenefluoride (VDF) or trifluoroethylene (TrFE) instead of PVDF.

[0291] In order to print or spray the copolymer containing PVDF and piezoelectric particles or piezoelectric powders, equipment such as three roll mill and basket mill may be used to mix a solvent, a dispersant, an antifoaming agent, for example, and to evenly disperse the piezoelectric particles or piezoelectric powders. In doing so, the amount of the solvent and the amount of the additive of the copolymer should be adjusted to form a thick film evenly by the printing and spraying. For example, in a case that the vibration layer PEL may be formed by screen printing, the copolymer may be a piezoelectric composite slurry having the viscosity of approximately 6,000 cps at the room temperature taking into account the mesh of the screen and printing thickness. In addition, in a case that the vibration layer PEL may be formed by printing, spraying or spin coating, the ratio of PVDF and piezoelectric particles or piezoelectric powders to adjust the viscosity of the slurry and to exhibit excellent piezoelectric properties may be approximately 6:4 to 2:8.

[0292] Alternatively, the vibration layer PEL may include a copolymer including polyester or urethane and piezoelectric particles or piezoelectric powders. In a case that the vibration layer PEL contains a range of about 65 to about 70% of the piezoelectric particles or the piezoelectric powders, a range of about 9 to about 20% of polyester or urethane, and a range of about 15 to about 21% of the solvent, printing characteristics, piezoelectric characteristics, flexibility and electrode adhesion may be increased. The piezoelectric characteristics may be improved and flexibility is increased as compared with a vibration layer using only the electroactive polymer. Accordingly, there is the advantage that the vibration layer PEL may be formed into a desired size.

[0293] The vibration layer PEL may include an acrylic resin, a polyester resin, for example, in order to enhance the adhesion with the first connection electrodes BE1, the first sound stem electrode SSE1 and the first sound branch electrodes SBE1 of the first sound electrode SOE1, the

second sound stem electrode SSE**2** and the second sound branch electrodes SBE**2** of the second sound electrode SOE**2**, and the shielding electrode SHE. As amounts of the acrylic resin and the polyester resin increase, the amount of PVDF decreases and thus the piezoelectric characteristics of the vibration layer PEL may deteriorate. Therefore, the amounts of the acrylic resin and the polyester resin may be about 6 wt % or less of the vibration layer PEL.

[0294] The vibrating layer PEL may be mechanically deformed by the inverse piezoelectric effect in a case that the first sound driving voltage is applied to the first sound electrode SOE**1** and the second sound driving voltage is applied to the second sound electrode SOE**2**. For example, in a case that a positive first sound driving voltage is applied to the first sound electrode SOE**1** and a negative second sound driving voltage is applied to the second sound electrode SOE**2**, and then a negative first driving voltage is applied to the first sound electrode SOE**1** and a positive second sound driving voltage is applied the second sound electrode SOE**2**, the vibration layer PEL may repeat expansion and contraction. Accordingly, it may vibrate in the third direction (z-axis direction) as shown in FIG. **13**. In addition, in a case that the vibration layer PEL is mechanically deformed, it may generate voltages on the first sound electrode SOE**1** and the second sound electrode SOE**2** by the piezoelectric effect. Each of the sound units SU may output sound by vibrating the vibration layer PEL by the inverse piezoelectric effect as shown in FIG. **13**.

[0295] The driving electrodes TE, the sensing electrodes RE, the dummy patterns DE, the second connection electrodes BE**2**, the first driving lines TL**1**, the second driving lines TL**2**, the sense lines RL, the first sound lines SOL**1**, and the second sound lines SOL**2** may be formed or disposed on the vibration layer PEL. The driving electrodes TE, the sensing electrodes RE, the dummy patterns DE, and the second connection electrodes BE**2** may be disposed to overlap the bank **180** in the third direction (z-axis direction). The driving electrodes TE, the sensing electrodes RE, the dummy patterns DE, the second connection electrodes BE**2**, the first driving lines TL**1**, the second driving lines TL**2**, the sensing lines RL, the first sound lines SOL**1** and the second sound lines SOL**2** may be made up of a single layer of molybdenum (Mo), titanium (Ti), copper (Cu) or aluminum (Al) or may be made of a metal material having a high reflectivity such as a stack structure of aluminum and titanium (Ti/Al/Ti), a stack structure of aluminum and ITO (ITO/AI/ITO), an APC alloy and a stack structure of APC alloy and ITO (ITO/APC/ITO).

[0296] The vibration layer PEL may be polarized by applying a voltage to the first sound electrode SOE**1** and the second sound electrode SOE**2**. Polarization may be carried out by corona polarization or by apply electric field directly, as known in the art.

[0297] First contact holes CNT**1** may be formed through the vibration layer PEL to expose the first connection electrodes BE**1**. The driving electrodes TE may be electrically connected to the first connection electrodes BE**1** through the first contact holes CNT**1**.

[0298] The first sensor insulating layer TINS**1** may be formed or disposed on the driving electrodes TE, the sensing electrodes RE, the dummy patterns DE, the second connection electrodes BE**2**, the first driving lines TL**1**, the second driving lines TL**2**, the sense lines RL, the first sound lines SOL**1** and the second sound lines SOL**2**. The first sensor insulating layer TINS**1** may be formed of an inorganic layer, for example, a silicon nitride layer, a silicon oxynitride layer, a silicon oxide layer, a titanium oxide layer, or an aluminum oxide layer. Alternatively, the first sensor insulating layer TINS**1** may be formed of an organic layer, for example, an acryl resin, an epoxy resin, a phenolic resin, a polyamide resin or a polyimide resin.

[0299] As shown in FIG. **11**, the first sound electrodes SOE**1**, the second sound electrodes SOE**2** and the vibration layer PEL may be formed or disposed on the sensor electrode layer SENL for sensing a user's touch input. Accordingly, it is possible to sense a user's touch input by using the driving electrodes TE and the sensing electrodes RE of the sensor electrode layer SENL, and it is also possible to output sound by vibrating the vibration layer PEL by the first sound electrode SOE**1** and the second sound electrode SOE**2** of the sensor electrode layer SENL. Sound may be output by using the sound units incorporated into the display panel **300**.

[0300] FIG. **14** is a schematic cross-sectional view taken along line I-I' of FIG. **10**. FIG. **15** is a schematic cross-sectional view taken along line II-II' of FIG. **10**.

[0301] An embodiment of FIGS. **14** and **15** may be different from an embodiment of FIGS. **12** and **13** in that a vibration layer PEL may be formed or disposed in a part of the sensor area TSA.

[0302] Referring to FIGS. **14** and **15**, the vibration layer PEL may be formed or disposed in the portions of the sensor area TSA where the sound units SU is disposed. The vibration layer PEL may be formed or disposed in the area where the first sound electrode SOE**1** and the second sound electrode SOE**2** may be disposed. A second sensor insulating layer TINS**2** may be formed or disposed in the area where the first connection electrodes BE**1** and the shielding electrodes SHE may be disposed, instead of the vibration layer PEL.

[0303] The second sensor insulating layer TINS**2** may be formed or disposed on the first connection electrodes BE**1** and the shielding electrodes SHE. The second sensor insulating layer TINS**2** may be formed of an organic layer, for example, an acryl resin, an epoxy resin, a phenolic resin, a polyamide resin or a polyimide resin. Alternatively, the second sensor insulating layer TINS**2** may include both an inorganic layer and an organic layer.

[0304] First contact holes CNT**1** may be formed or disposed through the second sensor insulating layer TINS**2**, via which the first connection electrodes BE**1** may be exposed. The driving electrodes TE may be electrically connected to the first connection electrodes BE**1** through the first contact holes CNT**1**. In such case, the first contact holes CNT**1** need not be formed or disposed in the vibration layer PEL.

[0305] The boundary between the vibration layer PEL and the second sensor insulating layer TINS**2** may overlap the sensing electrode RE or the driving electrode TE as shown in FIG. **14**, but the disclosure is not limited thereto. The boundary between the vibration layer PEL and the second sensor insulating layer TINS**2** may overlap neither the sensing electrode RE nor the driving electrode TE.

[0306] The vibration layer PEL and the second sensor insulating layer TINS**2** may not overlap each other in the third direction (z-axis direction) as shown in FIG. **14**, but the disclosure is not limited thereto. The second sensor insulating layer TINS**2** may be disposed on the vibration layer PEL.

In such case, the vibration layer PEL and the second sensor insulating layer TINS2 may overlap each other in the third direction (z-axis direction).

[0307] FIG. **16** is a schematic cross-sectional view taken along line I-I' of FIG. **10**. FIG. **17** is a schematic cross-sectional view taken along line II-II' of FIG. **10**.

[0308] An embodiment **16** and **17** may be different from an embodiment of FIGS. **12** and **13** in that first sound electrodes SOE**1**, second sound electrodes SOE**2**, shielding electrode SHE and first connection electrodes BE**1** may be disposed on a vibration layer PEL.

[0309] Referring to FIGS. **16** and **17**, the vibration electrode PEL may be disposed on a second buffer layer BF**2**. The first connection electrodes BE**1**, the first sound stem electrode SSE**1** and the first sound branch electrodes SBE**1** of the first sound electrode SOE**1**, the second sound stem electrode SSE**2** and the second sound branch electrodes SBE**2** of the second sound electrode SOE**2**, and the shielding electrode SHE may be formed or disposed on the vibration layer PEL.

[0310] A first sensor insulating layer TINS**1** may be formed or disposed on the first connection electrodes BE**1**, the first sound stem electrode SSE**1** and the first sound branch electrodes SBE**1** of the first sound electrode SOE**1**, the second sound stem electrode SSE**2** and the second sound branch electrodes SBE**2** of the second sound electrode SOE**2**, and the shielding electrode SHE. The first sensor insulating layer TINS**1** may be formed of an inorganic layer, for example, a silicon nitride layer, a silicon oxynitride layer, a silicon oxide layer, a titanium oxide layer, or an aluminum oxide layer. Alternatively, the first sensor insulating layer TINS**1** may include both an inorganic layer and an organic layer.

[0311] The driving electrodes TE, the sensing electrodes RE, the dummy patterns DE, the second connection electrodes BE**2**, the first driving lines TL**1**, the second driving lines TL**2**, the sense lines RL, the first sound lines SOL**1**, and the second sound lines SOL**2** may be formed or disposed on the first sensor insulating layer TINS**1**. First contact holes CNT**1** may be formed or disposed through the first touch second layer TINS**1**, via which the first connection electrodes BE**1** may be exposed. The driving electrodes TE may be electrically connected to the first connection electrodes BE**1** through the first contact holes CNT**1**.

[0312] The second sensor insulating layer TINS**2** may be formed or disposed on the driving electrodes TE, the sensing electrodes RE, the dummy patterns DE, the second connection electrodes BE**2**, the first driving lines TL**1**, the second driving lines TL**2**, the sense lines RL, the first sound lines SOL**1** and the second sound lines SOL**2**. The second sensor insulating layer TINS**2** may be formed of an inorganic layer, for example, a silicon nitride layer, a silicon oxynitride layer, a silicon oxide layer, a titanium oxide layer, or an aluminum oxide layer. Alternatively, the second sensor insulating layer TINS**2** may be formed of an organic layer, for example, an acryl resin, an epoxy resin, a phenolic resin, a polyamide resin or a polyimide resin.

[0313] As shown in FIG. **16**, the first sound electrodes SOE**1**, the second sound electrodes SOE**2** and the vibration layer PEL may be formed or disposed on the sensor electrode layer SENL for sensing a user's touch input. Accordingly, it is possible to sense a user's touch input by using the driving electrodes TE and the sensing electrodes RE of the sensor electrode layer SENL, and it is also possible to output sound by vibrating the vibration layer PEL by the first sound electrode SOE**1** and the second sound electrode SOE**2** of the sensor electrode layer SENL. Sound may be output by using the sound units incorporated into the display panel **300**.

[0314] FIG. **18** is a schematic cross-sectional view taken along line I-I' of FIG. **10**. FIG. **19** is a schematic cross-sectional view taken along line II-II' of FIG. **10**.

[0315] An embodiment of FIGS. **18** and **19** may be different from an embodiment of FIGS. **16** and **17** in that a vibration layer PEL may be formed or disposed in a part of the sensor area TSA.

[0316] Referring to FIGS. **18** and **19**, the vibration layer PEL may be formed or disposed in regions where the sound units SU is disposed in the sensor area TSA. The vibration layer PEL may be formed or disposed in the area where the first sound electrode SOE**1** and the second sound electrode SOE**2** may be disposed. A third sensor insulating layer TINS**3** may be formed or disposed in the region where the first connection electrodes BE**1** and the shielding electrodes SHE may be disposed instead of the vibration layer PEL. The third sensor insulating layer TINS**3** may be formed of an organic layer, for example, an acryl resin, an epoxy resin, a phenolic resin, a polyamide resin or a polyimide resin. Alternatively, the third sensor insulating layer TINS**3** may include both an inorganic layer and an organic layer.

[0317] The first sound electrodes SOE**1** and the second sound electrodes SOE**2** may be formed or disposed on the vibration layer PEL, and the first connection electrodes BE**1** and the shielding electrodes SHE may be formed or disposed on the third sensor insulating layer TINS**3**.

[0318] The boundary between the vibration layer PEL and the third sensor insulating layer TINS**3** may overlap the sensing electrode RE or the driving electrode TE as shown in FIG. **18**, but the disclosure is not limited thereto. The boundary between the vibration layer PEL and the third sensor insulating layer TINS**3** may not overlap the sensing electrode RE or the driving electrode TE.

[0319] The vibration layer PEL and the third sensor insulating layer TINS**3** may not overlap each other in the third direction (z-axis direction) as shown in FIG. **18**, but the disclosure is not limited thereto. The third sensor insulating layer TINS**3** may be disposed on the vibration layer PEL. In such case, the vibration layer PEL and the third sensor insulating layer TINS**3** may overlap each other in the third direction (z-axis direction).

[0320] FIG. **20** is a view showing a layout of a sensor electrode layer of a display panel according to an embodiment. FIG. **21** is an enlarged plan view showing a part of the sensor area of FIG. **20**. FIG. **21** is an enlarged plan view of area B of FIG. **20**.

[0321] An embodiment of FIGS. **20** and **21** may be different from an embodiment of FIGS. **7** and **8** in that first sound electrodes SOE**1** and second sound electrodes SOE**2** may overlap each other in the third direction (z-axis direction).

[0322] Referring to FIGS. **20** and **21**, each of the sound units SU may include subsidiary sound units SSU**1** and SSU**2**. Although each of the sound units SU may include a first subsidiary sound unit SSU**1** and a second subsidiary sound unit SSU**2** in the example shown in FIG. **20**, the number of subsidiary sound units of each of the sound units SU is not limited to two.

[0323] Each of the subsidiary sound units SSU**1** and SSU**2** may include first sound electrodes SOE**1**, second sound

electrodes SOE2, and a vibration layer. Referring to FIGS. 20 and 21, the second sound electrodes SOE2 and the vibration layer are not shown for convenience of illustration.

[0324] One of the first sound electrodes SOE1 and one of the second sound electrodes SOE2 of each of the subsidiary sound units SSU1 and SSU2 may overlap each other in the third direction (z-axis direction). A vibration layer may be disposed between the first sound electrode SOE1 and the second sound electrode SOE2 that overlap each other.

[0325] The first sound electrodes SOE1 of each of the subsidiary sound units SSU1 and SSU2 may be electrically connected to the first sound line SOL1. In each of the subsidiary sound units SSU1 and SSU2, the first sound electrodes SOE1 adjacent to each other in the first direction (x-axis direction) may be electrically connected to each other. For example, as shown in FIG. 21, in each of the subsidiary sound units SSU1 and SSU2, the first sound electrodes SOE1 adjacent to each other in the first direction (x-axis direction) may be electrically connected through third connection electrodes BE3.

[0326] The second sound electrodes SOE2 of each of the subsidiary sound units SSU1 and SSU2 may be electrically connected to the second sound line SOL2. In each of the subsidiary sound units SSU1 and SSU2, the second sound electrodes SOE2 adjacent to each other in the first direction (x-axis direction) may be electrically connected to each other. For example, in each of the subsidiary sound units SSU1 and SSU2, the second sound electrodes SOE2 adjacent to each other in the first direction (x-axis direction) may be electrically connected through fourth connection electrodes BE4. In FIG. 21, 'B−1' represents a predetermined area of the sensor area.

[0327] The first sound electrodes SOE1 and the third connection electrodes BE3 of the subsidiary sound units SSU1 and SSU2 may be made of the same or similar material on the same layer as the driving electrodes TE, the sensing electrodes RE and the dummy patterns DE. The first sound electrodes SOE1 and the third connection electrodes BE3 of each of the subsidiary sound units SSU1 and SSU2 may be electrically separated from the driving electrodes TE, the sensing electrodes RE and the dummy patterns DE. The first sound electrodes SOE1 and the third connection electrodes BE3 of the subsidiary sound units SSU1 and SSU2 may be spaced apart from the driving electrodes TE, the sensing electrodes RE and the dummy patterns DE.

[0328] The second sound electrodes SOE2 and the fourth connection electrodes BE4 of the subsidiary sound units SSU1 and SSU2 may be made of the same or similar material on the same layer as the first connection electrodes BE1. The second sound electrodes SOE2 and the fourth connection electrodes BE4 of each of the subsidiary sound units SSU1 and SSU2 may be electrically separated from the first connection electrodes BE1. The second sound electrodes SOE2 and the fourth connection electrodes BE4 of the subsidiary sound units SSU1 and SSU2 may be spaced apart from the first connection electrodes BE1.

[0329] The first sound electrodes SOE1 of the subsidiary sound units SSU1 and SSU2 may be disposed instead of some or a predetermined number of dummy patterns DE. As an example, some or a predetermined number of dummy patterns DE may be eliminated, and the first sound electrodes SOE1 of the subsidiary sound units SSU1 and SSU2 may be disposed in the places where the dummy patterns DE may be eliminated.

[0330] Each of the first sound electrodes SOE1 of the subsidiary sound units SSU1 and SSU2 may be surrounded by or may be adjacent to the sensing electrode RE as shown in FIGS. 20 and 21. It is, however, to be understood that the disclosure is not limited thereto. For example, each of the first sound electrodes SOE1 of the sub sound units SSU1 and SSU2 may be disposed to be surrounded by or may be adjacent to the driving electrode TE. In such case, in each of the sound units SU, the first sound electrodes SOE1 adjacent to each other in the second direction (y-axis direction) may be electrically connected, and the second sound electrodes SOE2 adjacent to each other in the second direction (y-axis direction) may be electrically connected.

[0331] As shown in FIGS. 20 and 21, in each of the subsidiary sound units SSU1 and SSU2, a first sound driving voltage may be applied to the first sound electrode SOE1 through the first sound line SOL1, and a second sound driving voltage may be applied to the second sound electrode SOE2 through the second sound line SOL2. Therefore, each of the subsidiary sound units SSU1 and SSU2 vibrates the vibration layer disposed between the first sound electrode SOE1 and the second sound electrode by the first sound driving voltage and the second sound driving voltage, thereby outputting sound. Sound may be output by using the sound units incorporated into the display panel 300.

[0332] On the other hand, first shielding electrodes SHE1 and second shielding electrodes SHE2 may be disposed between the subsidiary sound units SSU1 and SSU2. For example, the first shielding electrode SHE1 may be disposed between the first sound electrode SOE1 of the first subsidiary sound unit SSU1 and the second sound electrode SOE2 of the second subsidiary sound unit SSU2. In addition, the second shielding electrode SHE2 may be disposed between the second sound electrode SOE2 of the first subsidiary sound unit SSU1 and the second sound electrode SOE2 of the second subsidiary sound unit SSU2.

[0333] Each of the first shielding electrodes SHE1 may be surrounded by or may be adjacent to the driving electrode TE. The first shielding electrodes SHE1 adjacent to one another in the first direction (x-axis direction) may be electrically connected to one another through fifth connection electrodes BE5. The first shielding electrodes SHE1 electrically connected to each other in the first direction (x-axis direction) may be electrically connected to a first shielding line. The first shielding line may be electrically connected to one of the sound pads SP1 and SP2. Therefore, the first shielding electrodes SHE1 may be electrically connected to the sound driver 340.

[0334] The second shielding electrodes SHE2 adjacent to one another in the first direction (x-axis direction) may be electrically connected to one another through sixth connection electrodes BE6. The second shielding electrodes SHE2 electrically connected to each other in the first direction (x-axis direction) may be electrically connected to a second shielding line. The second shielding line may be electrically connected to another one of the sound pads SP1 and SP2. Therefore, the second shielding electrodes SHE2 may be electrically connected to the sound driver 340.

[0335] One of the first shielding electrodes SHE1 may overlap one of the second shielding electrodes SHE2 in the third direction (z-axis direction). The first shielding electrodes SHE1 may be made of the same or similar material on the same layer as the first sound electrodes SOE1. The

second shielding electrodes SHE**2** may be made of the same or similar material on the same layer as the second sound electrodes SOE**2**.

[0336] The sound driver **340** may apply the first shielding driving voltage to the first shielding electrodes SHE**1** and the second shielding driving voltage to the second shielding voltages SHE**2**. As shown in FIG. **27**, the first shielding driving voltage SHV**1** applied to the first shielding electrodes SHE**1** may be substantially equal to the second sound driving voltage applied to the second sound electrodes SOE**2** of the first subsidiary sound unit SSU**1**. The second shielding driving voltage SHV**2** applied to the second shielding electrodes SHE**2** may be substantially equal to the first sound driving voltage SOV**1** applied to the first sound electrodes SOE**1** of the first subsidiary sound unit SSU**1**. Since the vibration layer PEL is disposed between the first shielding electrodes SHE**1** and the second shielding electrodes SHE**2**, the vibration layer PEL may be vibrated by the first shielding driving voltage SHV**1** and the second shielding driving voltage SHV**2** so that a shielded sound may be output. Therefore, by vibrating the vibration layer PEL with the first shielding electrode SHE**1** and the second shielding electrode SHE**2**, it is possible to suppress the vibration or sound generated by the first subsidiary sound unit SSU**1** from affecting the vibration or sound generated by the second substrate sound unit SSU**2**.

[0337] FIG. **22** is a view showing an example of a sensor driver electrically connected to the driving electrodes and the sensing electrodes, and a sound driver electrically connected to the first sound electrodes and the second sound electrodes of FIG. **20**.

[0338] An embodiment of FIG. **22** may be different from an embodiment of FIG. **9** in that the first sound electrodes SOE**1** may be electrically connected to the sound driver **340** through the first sound line SOL**1**, and the second sound electrodes may be electrically connected to the sound driver **340** through the second sound line SOL**2**. The second sound electrodes are not shown in FIG. **22** for convenience of illustration.

[0339] Referring to FIG. **22**, the first sound electrodes SOE**1** adjacent to each other in the first direction (x-axis direction) may be electrically connected through third connection electrodes BE**3**. Therefore, the first sound electrodes SOE**1** electrically connected with one another in the first direction (x-axis direction) may be electrically connected to the sound driver **340** through the first sound line SOL**1**.

[0340] In addition, second sound electrodes adjacent to each other in the first direction (x-axis direction) may be electrically connected through fourth connection electrodes BE**4**. Therefore, the second sound electrodes electrically connected with one another in the first direction (x-axis direction) may be electrically connected to the sound driver **340** through the second sound line SOL**2**. The second sound electrodes may overlap the first sound electrodes SOE**1** in the third direction (z-axis direction).

[0341] The sound driver **340** may apply the first sound driving voltage to the first sound electrodes SOE**1** through the first sound line SOL**1** and may apply the second sound driving voltage to the second sound electrodes through the second sound line SOL**2**. Therefore, each of the subsidiary sound units SSU**1** and SSU**2** vibrates the vibration layer disposed between the first sound electrode SOE**1** and the second sound electrode by the first sound driving voltage and the second sound driving voltage, thereby outputting sound.

[0342] FIG. **23** is an enlarged plan view showing the driving electrodes, the sensing electrodes, the first sound electrode, the first connection electrodes, the second connection electrode and the third connection electrode of FIG. **22**.

[0343] Referring to FIG. **23**, the driving electrodes TE, the sensing electrodes RE, the first connection electrodes BE**1**, the second connection electrode BE**2**, the third connection electrode BE**3**, the fourth connection electrode BE**4**, the first sound electrode SOE**1** and the second sound electrode SOE**2** may be formed in a mesh topology when viewed from the top.

[0344] The driving electrodes TE, the sensing electrodes RE, the first sound electrode SOE**1**, the second connection electrode BE**2** and the third connection electrode BE**3** may be formed or disposed in the same layer, and thus they may be spaced apart from each other. There may be a gap between the driving electrode TE and the sensing electrode RE, between the driving electrode TE and the second connection electrode BE**2**, between the sensing electrode RE and the first sound electrode SOE**1**, between the second connection electrode BE**3** and the third connection electrode BE**3** and between the sensing electrode RE and the third connection electrode BE**3**. For convenience of illustration, the boundary between the driving electrode TE and the sensing electrode RE, the boundary between the driving electrode TE and the second connection electrode BE**2**, the boundary between the sensing electrode RE and the first sound electrode SOE**1**, the boundary between the second connection electrode BE**2** and the third connection electrode BE**3**, and the boundary between the sensing electrode RE and the third connection electrode BE**3** are indicated by dashed lines in FIG. **23**. Since the first connection electrodes BE**1**, the fourth connection electrode BE**4** and the second sound electrode SOE**2** may be formed or disposed on the same layer, they may be spaced apart from one another.

[0345] The first connection electrodes BE**1** and the second connection electrodes BE**2** may be substantially identical to those described above with reference to FIG. **10**. The sub-pixels R, G and B may be substantially identical to those described above with reference to FIG. **10**.

[0346] One end of the third connection electrode BE**3** may be electrically connected to one of the first sound electrodes SOE**1** adjacent to each other in the first direction (x-axis direction), and the other end thereof may be electrically connected to another one of them. The third connection electrode BE**3** may overlap the first connection electrode BE**1** in the third direction (z-axis direction). Since the third connection electrode BE**3** is formed or disposed on a different layer from the first connection electrode BE**1**, no short-circuit is formed or disposed between the third connection electrode BE**3** and the first connection electrode BE**1** even though they overlap each other in the third direction (z-axis direction).

[0347] One end of the fourth connection electrode BE**4** may be electrically connected to one of the second sound electrodes SOE**1** adjacent to each other in the first direction (x-axis direction), and the other end thereof may be electrically connected to another one of them. The fourth connection electrode BE**4** may be bent at least twice as shown in FIG. **23**. The fourth connection electrode BE**4** may overlap

the driving electrode TE and the sensing electrode RE in the third direction (z-axis direction). Since the fourth connection electrode BE**4** is formed or disposed on a different layer from the driving electrode TE and the sensing electrode RE, no short-circuit is formed or disposed between the driving electrode TE and the sensing electrode RE even though the fourth connection electrode BE**4** overlaps the driving electrode TE and the sensing electrode RE in the third direction (z-axis direction).

[0348] FIG. **24** is a schematic cross-sectional view taken along line III-III' of FIG. **23**. FIG. **25** is a schematic cross-sectional view of an example, taken along line IV-IV' of FIG. **23**.

[0349] An embodiment **24** and **25** may be different from an embodiment of FIGS. **11** and **12** in that a second sound electrode SOE**2** may be disposed on a second buffer layer BF**2**, and a first sound electrode SOE**1** may be disposed on a vibration layer PEL.

[0350] Referring to FIGS. **24** and **25**, second sound electrodes SOE**2** and first connection electrodes BE**1** may be formed or disposed on the second buffer layer BF**2**. In addition, fourth connection electrodes BE**4** may be formed or disposed on the second buffer layer BF**2**. The vibration layer PEL may be formed or disposed on the second sound electrodes SOE**2**, the first connection electrodes BE**1**, and the fourth connection electrodes BE**4**.

[0351] The vibration layer PEL may be mechanically deformed by the inverse piezoelectric effect in a case that the first sound driving voltage is applied to the first sound electrode SOE**1** and the second sound driving voltage is applied to the second sound electrode SOE**2**. For example, in a case that a positive first sound driving voltage is applied to the first sound electrode SOE**1** and a negative second sound driving voltage is applied to the second sound electrode SOE**2**, and then a negative first driving voltage is applied to the first sound electrode SOE**1** and a positive second sound driving voltage is applied the second sound electrode SOE**2**, the vibration layer PEL may repeat expansion and contraction. Accordingly, it may vibrate in the third direction (z-axis direction) as shown in FIG. **26**. In addition, in a case that the vibration layer PEL is mechanically deformed, it may generate voltage on the first sound electrode SOE**1** and the second sound electrode SOE**2** by the piezoelectric effect. Each of the sound units SU may output sound by vibrating the vibration layer PEL by the inverse piezoelectric effect as shown in FIG. **26**.

[0352] The driving electrodes TE, the sensing electrodes RE, the first sound electrodes SOE**1**, and the third connection electrodes BE**3** may be formed or disposed on the vibration layer PEL. First contact holes CNT**1** may be formed or disposed through the vibration layer PEL to expose the first connection electrodes BE**1**. The driving electrodes TE may be electrically connected to the first connection electrodes BE**1** through the first contact holes CNT**1**. The first sensor insulating layer TINS**1** may be formed or disposed on the driving electrodes TE, the sensing electrodes RE, the first sound electrodes SOE**1**, and the third connection electrodes BE**3**.

[0353] As shown in FIGS. **24** and **25**, the first sound electrodes SOE**1**, the second sound electrodes SOE**2** and the vibration layer PEL may be formed or disposed on the sensor electrode layer SENL for sensing a user's touch input. Accordingly, it is possible to sense a user's touch input by using the driving electrodes TE and the sensing electrodes RE of the sensor electrode layer SENL, and it is also possible to output sound by vibrating the vibration layer PEL by the first sound electrode SOE**1** and the second sound electrode SOE**2** of the sensor electrode layer SENL. Sound may be output by using the sound units incorporated into the display panel **300**.

[0354] FIG. **28** is a schematic cross-sectional view taken along line III-III' of FIG. **23**.

[0355] An embodiment of FIG. **28** may be different from an embodiment of FIG. **24** in that a vibration layer PEL may be formed or disposed in a part of a sensor area TSA.

[0356] Referring to FIG. **28**, the vibration layer PEL may be formed or disposed in the portions of the sensor area TSA where the sound units SU is disposed. The vibration layer PEL may be formed or disposed in the area where the first sound electrode SOE**1** and the second sound electrode SOE**2** may be disposed. In addition, the vibration layer PEL may be formed or disposed in the areas where the first shielding electrode SHE**1** and the second shielding electrode SHE**2** may be disposed. A second sensor insulating layer TINS**2** may be formed or disposed in the area where the first connection electrodes BE**1** may be disposed, instead of the vibration layer PEL.

[0357] The second sensor insulating layer TINS**2** may be formed or disposed on the first connection electrodes BE**1**. The second sensor insulating layer TINS**2** may be formed of an organic layer, for example, an acryl resin, an epoxy resin, a phenolic resin, a polyamide resin or a polyimide resin. Alternatively, the second sensor insulating layer TINS**2** may include both an inorganic layer and an organic layer.

[0358] First contact holes CNT**1** may be formed or disposed through the second sensor insulating layer TINS**2**, via which the first connection electrodes BE**1** may be exposed. The driving electrodes TE may be electrically connected to the first connection electrodes BE**1** through the first contact holes CNT**1**. In such case, the first contact holes CNT**1** need not be formed or disposed in the vibration layer PEL.

[0359] FIG. **29** is a side view showing an example of the display panel of FIG. **4**. FIG. **29** shows a side view of the display panel **300** with the subsidiary area SBA bent and disposed on the lower surface of the display panel **300**.

[0360] An embodiment of FIG. **29** may be different from an embodiment of FIG. **5** in that a sound electrode layer SOEL including sound electrodes may be disposed between the substrate SUB and the bottom panel cover PB. According to an embodiment of FIG. **29**, sound electrodes may not be included in the sensor electrode layer SENL.

[0361] FIGS. **30** and **31** are views showing a layout of a sound electrode layer of a display panel according to an embodiment. FIG. **32** is a view showing sound units of a display panel and a buffer of a bottom panel cover according to an embodiment.

[0362] FIGS. **30** and **31** show sound electrodes disposed on the lower surface of the substrate SUB of a display panel according to an embodiment. FIG. **30** shows a layout of the lower surface of the display panel **300** with the subsidiary area SBA unfolded. FIG. **31** shows a layout of the lower surface of the display panel **300** with the subsidiary area SBA bent and disposed on the lower surface. FIG. **32** shows sound units SU**1**, SU**2**, SU**3** and SU**4** and the buffer **420** of the bottom panel cover PB disposed on the lower surface of the substrate SUB of the display panel **300**.

[0363] Referring to FIGS. **30** and **31**, the sound units SU**1**, SU**2**, SU**3** and SU**4** may be disposed on the lower surface of

the substrate SUB of the display panel **300**. Although the four sound units SU**1**, SU**2**, SU**3** and SU**4** may be disposed on the lower surface of the substrate SUB of the display panel **300** in the example shown in FIGS. **30** and **31**, the number of the sound units SU**1**, SU**2**, SU**3** and SU**4** is not limed to four.

[0364] Each of the sound units SU**1**, SU**2**, SU**3** and SU**4** may include a first sound electrode, a second sound electrode, and a vibration layer. The first sound electrode, the second sound electrode and the vibration layer may overlap each other in the third direction (z-axis direction). The vibration layer may be disposed between the first sound electrode and the second sound electrode. The vibration layer may be mechanically deformed by the inverse piezoelectric effect in a case that the first sound driving voltage is applied to the first sound electrode and the second sound driving voltage is applied to the second sound electrode. In addition, in a case that the vibration layer is mechanically deformed, it may generate voltage on the first sound electrode and the second sound electrode by the piezoelectric effect. Each of the sound units SU may output sound by vibrating the vibration layer by the inverse piezoelectric effect.

[0365] The first sound electrode of the first sound unit SU**1** and the first sound electrode of the second sound unit SU**2** arranged or disposed in the first direction (x-axis direction) may be electrically connected to a first horizontal sound line HSOL**1** of the first sound line SOL**1**. The first sound electrode of the third sound unit SU**3** and the first sound electrode of the fourth sound unit SU**4** arranged or disposed in the first direction (x-axis direction) may be electrically connected to a second horizontal sound line HSOL**2** of the first sound line SOL**1**.

[0366] The second sound electrode of the first sound unit SU**1** and the second sound electrode of the third sound unit SU**3** arranged or disposed in the second direction (y-axis direction) may be electrically connected to a first vertical sound line VSOL**1** of the second sound line SOL**2**. The second sound electrode of the second third sound unit SU**2** and the second sound electrode of the fourth sound unit SU**4** arranged or disposed in the second direction (y-axis direction) may be electrically connected to a second vertical sound line VSOL**2** of the second sound line SOL**2**.

[0367] The first horizontal connection line HSOL**1** may be electrically connected to a first sound pad SP**1**, the second horizontal connection line HSOL**2** may be electrically connected to a second sound pad SP**2**, the first vertical connection line VSOL**1** may be electrically connected to a third sound pad SP**3**, and the second vertical connection line VSOL**2** may be electrically connected to a fourth sound pad SP**4**. In a case that the subsidiary area SBA is bent and disposed on the lower surface of the display panel **300**, the first sound pad SP**1**, the second sound pad SP**2**, the third sound pad SP**3** and the fourth sound pad SP**4** may overlap the display circuit board **310** in the third direction (z-axis direction). Accordingly, the first sound pad SP**1**, the second sound pad SP**2**, the third sound pad SP**3** and the fourth sound pad SP**4** may be electrically connected to the display circuit board **310**. Therefore, the first horizontal connection line HSOL**1**, the second horizontal connection line HSOL**2**, the first vertical connection line VSOL**1** and the second vertical connection line VSOL**2** may be electrically connected to the sound driver **340** disposed on the display circuit board **310**.

[0368] In order to output sound by vibrating the vibration layer of the first sound unit SU**1**, the sound driver **340** may apply a first horizontal sound driving voltage to the first horizontal sound line HSOL**1** and may apply a first vertical sound driving voltage to the first vertical sound line VSOL**1**. In order to output sound by vibrating the vibration layer of the second sound unit SU**2**, the sound driver **340** may apply the first horizontal sound driving voltage to the first horizontal sound line HSOL**1** and may apply a second vertical sound driving voltage to the second vertical sound line VSOL**2**. In order to output sound by vibrating the vibration layer of the third sound unit SU**3**, the sound driver **340** may apply a second horizontal sound driving voltage to the second horizontal sound line HSOL**2** and may apply the first vertical sound driving voltage to the first vertical sound line VSOL**1**. In order to output sound by vibrating the vibration layer of the fourth sound unit SU**4**, the sound driver **340** may apply the second horizontal sound driving voltage to the second horizontal sound line HSOL**2** and may apply the second vertical sound driving voltage to the second vertical sound line VSOL**2**.

[0369] In order to output sound by the first sound unit SU**1** and the second sound unit SU**2**, the sound driver **340** may apply the first horizontal sound driving voltage to the first horizontal sound line HSOL**1**, may apply the first vertical sound driving voltage to the first vertical sound line VSOL**1**, and may apply the second vertical sound driving voltage to the second vertical sound line VSOL**2**. In order to output sound by the first sound unit SU**1** and the third sound unit SU**3**, the sound driver **340** may apply the first horizontal sound driving voltage to the first horizontal sound line HSOL**1**, may apply the second horizontal sound driving voltage to the second horizontal sound line HSOL**2**, and may apply the first vertical sound driving voltage to the first vertical sound line VSOL**1**. In order to output sound by the second sound unit SU**2** and the fourth sound unit SU**4**, the sound driver **340** may apply the first horizontal sound driving voltage to the first horizontal sound line HSOL**1**, may apply the second horizontal sound driving voltage to the second horizontal sound line HSOL**2**, and may apply the first vertical sound driving voltage to the second vertical sound line VSOL**2**. In order to output sound by the third sound unit SU**3** and the fourth sound unit SU**4**, the sound driver **340** may apply the second horizontal sound driving voltage to the second horizontal sound line HSOL**2**, may apply the first vertical sound driving voltage to the first vertical sound line VSOL**1**, and may apply the second vertical sound driving voltage to the second vertical sound line VSOL**2**. In order to output sound by all of the first sound unit SU**1**, the second sound unit SU**2**, the third sound unit SU**3** and the fourth sound unit SU**4**, the sound driver **340** may apply the first horizontal sound driving voltage to the first horizontal sound line HSOL**1**, may apply the second horizontal sound driving voltage to the second horizontal sound line HSOL**2**, may apply the first vertical sound driving voltage to the first vertical sound line VSOL**1**, and may apply the second vertical sound driving voltage to the second vertical sound line VSOL**2**.

[0370] Each of the sound units SU**1**, SU**2**, SU**3** and SU**4** may not overlap the buffer **420**. To this end, the buffer **420** may include buffer holes BH overlapping the sound units SU**1**, SU**2**, SU**3** and SU**4** in the third direction (z-axis direction), respectively. The buffer holes BH may penetrate through the buffer **420**. Due to the buffer holes BH, a

resonator (or a soundbox) may be formed or disposed under or below each of the sound units SU1, SU2, SU3 and SU4. Therefore, the sound pressure level of the sound output by each of the sound units SU1, SU2, SU3 and SU4 may be increased due to the resonator.

[0371] As shown in FIGS. **30** and **31**, sound units SU1, SU2, SU3 and SU4 may be arranged or disposed in an m-by-n matrix, where m and n are positive integers. The first sound electrodes SOE1 of the sound units arranged or disposed in the same row may be electrically connected to the same horizontal sound line, while the second sound electrodes SOE2 of the sound units arranged or disposed in the same column may be electrically connected to the same vertical sound line. Therefore, it is possible to reduce the number of sound lines for driving the sound units SU1, SU2, SU3 and SU4, and to output sound by driving the sound units SU1, SU2, SU3 and SU4 individually or simultaneously. Therefore, the display device may output a single-channel sound as well as multi-channel sound, i.e., two-channel sound.

[0372] FIG. **33** is a schematic cross-sectional view showing an example, taken along line V-V' of FIGS. **30** and **31**. FIG. **34** is a schematic cross-sectional view showing an example, taken along line VI-VI' of FIGS. **30** and **31**. FIGS. **33** and **34** show a schematic cross section of the fourth sound unit SU4.

[0373] Referring to FIGS. **33** and **34**, a light-shielding member LSM may be formed or disposed on the lower surface of the substrate SUB. As the light-shielding member LSM blocks light from being transmitted, it is possible to prevent the sound units SU1, SU2, SU3 and SU4 from being recognized by the user on the upper surface of the display panel **300**. The light-shielding member LSM may include a light-absorbing material such as a black pigment and a black dye.

[0374] The first sound line SOL1 including the first horizontal sound line HSOL1 and the second horizontal sound line HSOL2, the second sound line SOL2 including the first vertical sound line VSOL1 and the second vertical sound line VSOL2, and the first sound electrode SOE1 may be formed or disposed on the light-shielding member LSM. The first sound line SOL1, the second sound line SOL2 and the first sound electrode SOE1 may be made of the same or similar material. The first sound line SOL1 and the first sound electrode SOE1 may be electrically connected to each other. The second sound line SOL2 and the first sound electrode SOE1 may be electrically separated from each other. The first sound line SOL1, the second sound line SOL2 and the first sound electrode SOE1 may include a conductive metal material.

[0375] The vibration layer PEL may be formed or disposed on the first sound electrode SOE1. The vibration layer PEL may be a piezoelectric material an electroactive polymer that may be deformed according to the first sound driving voltage applied to the first sound electrode SOE1 and the second sound driving voltage applied to the second sound electrode SOE2. The piezoelectric material may include plumbum zirconate titanate (PZT), and the electroactive polymer may include a ferroelectric polymer such as polyvinylidene fluoride (PVDF) and poly(vinylidenefluoride-co-trifluoroethylene) (P(VDF-TrFE)). The vibration layer PEL may be formed or disposed on the first sound electrode SOE1 by printing, spraying or spin coating. The vibration layer PEL may be similar to that described above with reference to FIG. **11**.

[0376] The vibration layer PEL may be mechanically deformed by the inverse piezoelectric effect in a case that the first sound driving voltage is applied to the first sound electrode SOE1 and the second sound driving voltage is applied to the second sound electrode SOE2. In addition, in a case that the vibration layer PEL is mechanically deformed, it may generate voltage on the first sound electrode SOE1 and the second sound electrode SOE2 by the piezoelectric effect. Each of the sound units SU may output sound by vibrating the vibration layer PEL by the inverse piezoelectric effect.

[0377] The first vertical sound line VSOL1 or the second vertical sound line VSOL2 may be formed or disposed on side surfaces of the vibration layer PEL. For example, the first vertical sound line VSOL1 may be formed or disposed on side surfaces of the vibration layer PEL of each of the first sound unit SU1 and the third sound unit SU3. A second vertical sound line VSOL2 may be formed or disposed on side surfaces of the vibration layer PEL of each of the second sound unit SU2 and the fourth sound unit SU4.

[0378] The second sound electrode SOE2 may be formed or disposed on the vibration layer PEL. The vibration layer PEL may be disposed between the first sound electrode SOE1 and the second sound electrode SOE2 in the third direction (z-axis direction). The second sound electrode SOE2 may include a conductive metal material. In order to prevent a short-circuit between the first sound electrode SOE1 and the second vertical sound line VSOL2, the length L1 of the first sound electrode SOE1 in the second direction (y-axis direction) may be smaller than the length L2 of the vibration layer PEL in the second direction (y-axis direction) as shown in FIG. **34**.

[0379] The first sound line SOL1 and the first sound electrode SOE1 may be formed by printing or spraying silver (Ag) paste, carbon paste, or conductive polymer onto the light-shielding member LSM. Alternatively, the first sound line SOL1 and the first sound electrode SOE1 may be formed by depositing conductive material such as copper (Cu), aluminum (Al), silver (Ag) and indium tin oxide (ITO) on the light-shielding member LSM.

[0380] The second sound electrode SOE2 and the second sound line SOL2 may be formed by printing or spraying silver (Ag) paste, carbon paste, or conductive polymer onto the vibration layer PEL. Alternatively, the second sound electrode SOE2 and the second sound line SOL2 may be formed by depositing conductive material such as copper (Cu), aluminum (Al), silver (Ag) and indium tin oxide (ITO) on the vibration layer PEL.

[0381] An adhesive member **410** may be disposed on the first sound line SOL1 and the second sound line SOL2. The adhesive member **410** may be a pressure-sensitive adhesive. The upper surface of the adhesive member **410** may be embossed to obtain buffer effect.

[0382] The buffer **420** may be disposed on the adhesive member **410**. The buffer **420** absorbs an external impact to prevent the display panel **300** from being damaged. The buffer **420** may be formed of a polymer resin such as polyurethane, polycarbonate, polypropylene and polyethylene, or may be formed of a material having elasticity such as a rubber and a sponge obtained by foaming a urethane-based material or an acrylic-based material.

[0383] Buffer holes BH may be formed or disposed in the adhesive member **410** and the buffer **420** to form a resonator under or below each of the sound units SU**1**, SU**2**, SU**3** and SU**4**. The buffer holes BH may penetrate through the adhesive member **410** and the buffer **420**. The sound units SU**1**, SU**2**, SU**3** and SU**4** may overlap the buffer holes BH in the third direction (z-axis direction), respectively. Accordingly, the sound units SU**1**, SU**2**, SU**3** and SU**4** may be disposed in the buffer holes BH, respectively.

[0384] A heat dissipation member **430** may be disposed on the buffer **420**. The heat dissipation member **430** may include a base film **431**, a first heat-dissipating layer **432** and a second heat-dissipating layer **433**. The base film **431** may be a polyimide film or polyethylene terephthalate film. The first heat-dissipating layer **432** may include graphite, carbon nanotubes, or the like within the spirit and the scope of the disclosure. The second heat-dissipating layer **433** may be implemented as a metal thin film, such as copper, nickel, ferrite and silver, which may block electromagnetic waves and have excellent thermal conductivity.

[0385] As shown in FIGS. **33** and **34**, the sound electrode layer SOEL including the first sound electrodes SOE**1**, the second sound electrodes SOE**2** and the vibration layer PEL may be disposed between the substrate SUB of the display panel **300** and the bottom panel cover PB. Therefore, the vibration layer PEL is vibrated by the first sound electrodes SOE**1** and the second sound electrodes SOE**2** of the sound electrode layer SOEL, and sound may be output. Sound may be output by using the sound units incorporated into the display panel.

[0386] FIG. **35** is a view showing a layout of a sound electrode layer of a display panel according to an embodiment. FIG. **36** is a view showing a layout of subsidiary sound units and a vibration unit of the first sound unit of FIG. **35** in detail.

[0387] FIG. **35** shows a layout of the lower surface of the display panel **300** with the subsidiary area SBA unfolded. FIG. **36** shows the first sound unit SU**1** of FIG. **35** in detail.

[0388] An embodiment of FIGS. **35** and **36** may be different from an embodiment of FIGS. **30** and **31** in that each of sound units SU**1**, SU**2**, SU**3** and SU**4** may include a vibration unit and subsidiary sound units.

[0389] Referring to FIGS. **35** and **36**, each of the sound units SU may include a vibration unit and subsidiary sound units. For example, the first sound unit SU**1** may include a first vibration unit VU**1** and (1-1) to (1-4) subsidiary sound units SU**11**, SU**12**, SU**13** and SU**14**. The first vibration unit VU**1** may be electrically separated from the (1-1) to (1-4) subsidiary sound units SU**11**, SU**12**, SU**13** and SU**14**. The first vibration unit VU**1** may be spaced apart from the (1-1) to (1-4) subsidiary sound units SU**11**, SU**12**, SU**13** and SU**14**.

[0390] The first vibration unit VU**1** may include a first vibration electrode, a second vibration electrode, and a second vibration layer disposed between the first vibration electrode and the second vibration electrode in the third direction (z-axis direction). Each of the (1-1) to (1-4) subsidiary sound units SU**11**, SU**12**, SU**13** and SU**14** may include a first sound electrode, a second sound electrode, and a first vibration layer disposed between the first sound electrode and the second sound electrode in the third direction (z-axis direction).

[0391] The first sound electrode of the (1-1) subsidiary sound unit SU**11** and the first sound electrode of the (1-2) subsidiary sound unit SU**12** may be electrically connected to a first subsidiary horizontal sound line SHSL**1**, and the first sound electrode of the (1-3) subsidiary sound unit SU**13** and the first sound electrode of the (1-4) subsidiary sound unit SU**14** may be electrically connected to a second subsidiary horizontal sound line SHSL**2**. The second sound electrode of the (1-1) subsidiary sound unit SU**11** and the second sound electrode of the (1-3) subsidiary sound unit SU**13** may be electrically connected to a first subsidiary vertical sound line SVSL**1**, and the second sound electrode of the (1-2) subsidiary sound unit SU**12** and the second sound electrode of the (1-4) subsidiary sound unit SU**14** may be electrically connected to a second subsidiary vertical sound line SVSL**2**. The first vibration electrode of the first vibration unit VU**1** may be electrically connected to the first horizontal vibration line HVL**1**, and the second vibration electrode may be electrically connected to the first vertical vibration line VVL**1**.

[0392] The first horizontal vibration line HVL**1** may be electrically separated from the first subsidiary horizontal sound line SHSL**1** and the second subsidiary horizontal sound line SHSL**2**. The first horizontal vibration line HVL**1** may be spaced apart from the first subsidiary horizontal sound line SHSL**1** and the second subsidiary horizontal sound line SHSL**2**. The first horizontal vibration line HVL**1** may be disposed between the first subsidiary horizontal sound line SHSL**1** and the second subsidiary horizontal sound line SHSL**2**.

[0393] The first vertical vibration line VVL**1** may be electrically separated from the first subsidiary vertical sound line SVSL**1** and the second subsidiary vertical sound line SVSL**2**. The first vertical vibration line VVL**1** may be spaced apart from the first subsidiary vertical sound line SVSL**1** and the second subsidiary vertical sound line SVSL**2**. The first vertical vibration line VVL**1** may be disposed between the first subsidiary vertical sound line SVSL**1** and the second subsidiary vertical sound line SVSL**2**.

[0394] The first subsidiary horizontal sound line SHSL**1**, the second subsidiary horizontal sound line SHSL**2**, the first subsidiary vertical sound line SVSL**1** and the second subsidiary vertical sound line SVSL**2** may be electrically connected to sound pads SP. The first horizontal vibration line HVL**1** and the first vertical vibration line VVL**1** may be electrically connected to vibration pads VP. The sound pads SP and the vibration pads VP may be electrically connected to the display circuit board **310** in a case that the subsidiary area SBA is bent and disposed on the lower surface of the display panel **300**.

[0395] In order to output sound by vibrating the vibration layers of the first to fourth subsidiary sound units SU**11**, SU**12**, SU**13** and SU**14** of the first sound unit SU**1**, the sound driver **340** may apply the first horizontal sound driving voltage to the first subsidiary horizontal sound line SHSL**1** and the second subsidiary horizontal sound line SHSL**2** and may apply the first vertical sound driving voltage to the first subsidiary vertical sound line SVSL**1** and the second subsidiary vertical sound line SVSL**2**. In addition, in order to provide a user with a haptic feedback by vibrating the vibration layers of the first vibration unit VU**1**, the sound driver **340** may apply a first horizontal vibration driving voltage to a first horizontal vibration line HVL**1** and may apply a first vertical vibration driving voltage to a first vertical vibration line VVL**1**.

[0396] For example, in a case that a user's touch is made or an object of an image exists in an area adjacent to the fourth sound unit SU**4** as shown in FIG. **58**, the sound driver **340** may vibrate the first vibration layer of the fourth sound unit SU**4** to output a sound associated with the image, for example, a gunshot sound and may also vibrate the second vibration layer of the fourth vibration unit VU**4** to provide a haptic feedback. Therefore, a user may feel the vibration at the position where the sound is generated, and thus the user may experience more realistic sound effect.

[0397] The second sound unit SU**2** may include a second vibration unit and (2-1) to (2-4) subsidiary sound units as similar to the first sound unit SU**1** in FIG. **36**. For example, the second sound unit SU**2** may be substantially identical to the first sound unit SU**1** except that the second sound unit SU**2** may be electrically connected to a third subsidiary vertical sound line, a fourth subsidiary vertical sound line and a second vertical vibration line, instead of the first subsidiary vertical sound line SVSL**1**, the second subsidiary vertical sound line SVSL**2**, and the first vertical vibration line VVL**1**; and, therefore, the redundant description will be omitted.

[0398] The third sound unit SU**3** may include a third vibration unit and (3-1) to (3-4) subsidiary sound units as similar to the first sound unit SU**1** in FIG. **36**. For example, the third sound unit SU**3** may be substantially identical to the first sound unit SU**1** except that the third sound unit SU**3** may be electrically connected to a third subsidiary horizontal sound line, a fourth subsidiary horizontal sound line and a second horizontal vibration line, instead of the first subsidiary horizontal sound line SHSL**1**, the second subsidiary horizontal sound line SHSL**2** and the first horizontal vibration line HVL**1**; and, therefore, the redundant description will be omitted.

[0399] The fourth sound unit SU**4** may include a fourth vibration unit and (4-1) to (4-4) subsidiary sound units as similar to the first sound unit SU**1** in FIG. **36**. For example, the fourth sound unit SU**4** may be substantially identical to the first sound unit SU**1** except that the fourth sound unit SU**4** may be electrically connected to a third subsidiary horizontal sound line, a fourth subsidiary horizontal sound line, a third subsidiary vertical sound line, a fourth subsidiary vertical sound line, a second horizontal vibration line and a second vertical vibration line, instead of the first subsidiary horizontal sound line SHSL**1**, the second subsidiary horizontal sound line SHSL**2**, the first subsidiary vertical sound line SVSL**1**, the second subsidiary vertical sound line SVSL**2**, the first horizontal vibration line HVL**1** and the first vertical vibration line VVL**1**; and, therefore, the redundant description will be omitted.

[0400] As shown in FIGS. **35** and **36**, sound units SU**1**, SU**2**, SU**3** and SU**4** is arranged or disposed in an m-by-n matrix, where m and n are positive integers. The first vibration electrodes VE**1** of the sound units arranged or disposed in the same row may be electrically connected to the same horizontal vibration line, the first sound electrodes SOE**1** of the sound units arranged or disposed in the same row may be electrically connected to the same horizontal sound line, the second vibration electrodes VE**2** of the sound units arranged or disposed in the same column may be electrically connected to the same vertical vibration line, and the second sound electrodes SOE**2** of the sound units arranged or disposed in the same column may be electrically connected to the same vertical sound line. Therefore, it is possible to reduce the number of vibration lines and sound lines for driving the sound units SU**1**, SU**2**, SU**3** and SU**4**, and to output sound and/or vibration by driving the sound units SU**1**, SU**2**, SU**3** and SU**4** individually or simultaneously. Therefore, the display device may output a single-channel sound as well as multi-channel sound, i.e., two-channel sound. In addition, the display device may provide a haptic feedback by generating vibration at the location where sound is generated.

[0401] FIG. **37** is a schematic cross-sectional view taken along line VII-VII' of FIG. **36**. FIG. **38** is a schematic cross-sectional view taken along line VIII-VIII' of FIG. **36**. FIG. **39** is a schematic cross-sectional view taken along line IX-IX' of FIG. **36**. FIG. **40** is a schematic cross-sectional view taken along line X-X' of FIG. **36**.

[0402] An embodiment of FIGS. **37** to **40** may be different from an embodiment of FIGS. **33** and **34** in that a first sound unit SU**1** may include a vibration unit and subsidiary sound units.

[0403] Referring to FIGS. **37** to **40**, a first horizontal vibration line HVL**1**, a first vertical vibration line VVL**1**, a first vibration electrode VE**1**, a first subsidiary horizontal sound line SHSL**1**, a second subsidiary horizontal sound line SHSL**2**, and a first sound electrodes SOE**1** may be formed or disposed on a light-shielding member LSM. The first horizontal vibration line HVL**1**, the first vertical vibration line VVL**1**, the first vibration electrode VE**1**, the first subsidiary horizontal sound line SHSL**1**, the second subsidiary horizontal sound line SHSL**2** and the first sound electrodes SOE**1** may be made of the same or similar material. The first horizontal vibration line HVL**1** may be electrically connected to the first vibration electrode VE**1**. The first vertical vibration line VVL**1** may be electrically separated from the first vibration electrode VE**1**. The first horizontal vibration line HVL**1**, the first vertical vibration line VVL**1**, the first vibration electrode VE**1**, the first subsidiary horizontal sound line SHSL**1**, the second subsidiary horizontal sound line SHSL**2** and the first sound electrodes SOE**1** may include a conductive metal material.

[0404] The second vibration layer VPEL may be formed or disposed on the first vibration electrode VE**1**. The second vibration layer VPEL may be a piezoelectric material or an electroactive polymer that may be deformed according to the first vibration driving voltage applied to the first vibration electrode VE**1** and the second vibration driving voltage applied to the second vibration electrode VE**2**. The piezoelectric material may include plumbum zirconate titanate (PZT), and the electroactive polymer may include a ferroelectric polymer such as polyvinylidene fluoride (PVDF) and poly(vinylidenefluoride-co-trifluoroethylene) (P(VDF-TrFE)). The electroactive polymer may include piezoelectric particles such as ZnO and $BaTiO_3$ to increase the piezoelectric effect. In a case that the first vibration driving voltage is applied to the first vibration electrode VE**1** and the second vibration driving voltage is applied to the second vibration electrode VE**2**, the second vibration layer VPEL may be deformed by the inverse piezoelectric effect. In addition, in a case that the second vibration layer VPEL is mechanically deformed, it may generate voltage on the first vibration electrode VE**1** and the second sound electrode VE**2** by the piezoelectric effect. The first vibration unit VU**1** may provide a user with a haptic feedback by vibrating the second vibration layer VPEL by the inverse piezoelectric effect.

[0405] The first vibration layer SPEL may be formed or disposed on the first sound electrode SOE**1** of each of the (1-1) to (1-4) subsidiary sound units SU**11**, SU**12**, SU**13** and SU**14**. The first vibration layer SPEL may be a piezoelectric material an electroactive polymer that may be deformed according to the first sound driving voltage applied to the first sound electrode SOE**1** and the second sound driving voltage applied to the second sound electrode SOE**2**. The first vibration layer SPEL may be mechanically deformed by the inverse piezoelectric effect in a case that the first sound driving voltage is applied to the first sound electrode SOE**1** and the second sound driving voltage is applied to the second sound electrode SOE**2**. In addition, in a case that the first vibration layer SPEL is mechanically deformed, it may generate voltage on the first sound electrode SOE**1** and the second sound electrode SOE**2** by the piezoelectric effect. Each of the (1-1) to (1-4) subsidiary sound units SU**11**, SU**12**, SU**13** and SU**14** may output sound by vibrating the first vibration layer SPEL by the inverse piezoelectric effect.

[0406] A first vertical vibration line VVL**1** may be formed or disposed on side surfaces of the second vibration layer VPEL of the first vibration unit VP**1**. The second vibration electrode VE**2** may be formed or disposed on the second vibration layer VPEL of the first vibration unit VP**1**. The second vibration layer VPEL may be disposed between the first vibration electrode VE**1** and the second vibration electrode VE**2** in the third direction (z-axis direction). The second vibration electrode VE**2** may include a conductive metal material. In order to prevent a short-circuit between the first vibration electrode VE**1** and the first vertical vibration line VVL**1**, the length L**1** of the first vibration electrode VE**1** in the second direction (y-axis direction) may be smaller than the length L**2** of the second vibration layer VPEL in the second direction (y-axis direction) as shown in FIG. **37**.

[0407] The first subsidiary vertical sound line SVSL**1** may be formed or disposed on side surfaces of the first vibration layer SPEL of each of the first subsidiary sound unit SU**11** and the third subsidiary sound unit SU**13**. The second subsidiary vertical sound line SVSL**2** may be formed or disposed on side surfaces of the first vibration layer SPEL of each of the second subsidiary sound unit SU**12** and the fourth subsidiary sound unit SU**14**. The second sound electrode SOE**2** may be formed or disposed on the second sound electrode SOE**2** of each of the (1-1) to (1-4) subsidiary sound units SU**11**, SU**12**, SU**13** and SU**14**. The first vibration layer SPEL may be disposed between the first sound electrode SOE**1** and the second sound electrode SOE**2** in the third direction (z-axis direction). The second sound electrode SOE**2** may include a conductive metal material. In order to prevent a short-circuit between the first sound electrode SOE**1** and the first subsidiary vertical sound line SVSL**1** in the first subsidiary sound unit SU**11** and the third subsidiary sound unit SU**13**, the length of the first sound electrode SOE**1** in the second direction (y-axis direction) may be smaller than the length of the first vibration layer SPEL in the second direction (y-axis direction) as shown in FIG. **40**.

[0408] As shown in FIGS. **37** to **40**, the sound electrode layer SOEL including the first sound electrodes SOE**1**, the second sound electrodes SOE**2**, the first vibration electrode VE**1**, the second vibration electrode VE**2**, the first vibration layers SPEL and the second vibration layers VPEL may be disposed between the substrate SUB of the display panel **300** and the bottom panel cover PB. Therefore, sound may be output by vibrating the first vibration layers SPEL by the first sound electrodes SOEL and the second sound electrodes SOE**2** of the sound electrode layer SOEL, and a haptic feedback may be provided by vibrating the second vibration layers VPEL by the first vibration electrodes VE**1** and the second vibration electrodes VE**2**. Sound may be output and haptic feedback may be provided by using the sound units incorporated into the display panel **300**.

[0409] FIG. **41** is a view showing a layout of a display panel according to an embodiment.

[0410] An embodiment of FIG. **41** may be different from an embodiment of FIGS. **30** and **31** in that shielding units SHU**1**, SHU**2**, SHU**3** and SHU**4** may be disposed between sound units SU**1**, SU**2**, SU**3** and SU**4**.

[0411] Referring to FIG. **41**, in order to avoid the sound or vibration by the first sound unit SU**1** and the sound or vibration by the second sound unit SU**2** from affecting each other, the first shielding unit SHU**1** may be disposed between the first sound unit SU**1** and the second sound unit SU**2**. The first sound unit SU**1**, the first shielding unit SHU**1** and the second sound unit SU**2** may be arranged or disposed in the first direction (x-axis direction). The length of the first shielding unit SHU**1** in the first direction (x-axis direction) may be smaller than the length of the first sound unit SU**1** in the first direction (x-axis direction), and the length of the second sound unit SU**2** in the first direction (x-axis direction). The length of the first shielding unit SHU**1** in the second direction (y-axis direction) may be substantially equal to the length of the first sound unit SU**1** in the second direction (y-axis direction) and the length of the second sound unit SU**2** in the second direction (y-axis direction).

[0412] In order to avoid the sound or vibration by the first sound unit SU**1** and the sound or vibration by the third sound unit SU**3** from affecting each other, the second shielding unit SHU**2** may be disposed between the first sound unit SU**1** and the third sound unit SU**3**. The first sound unit SU**1**, the second shielding unit SHU**2** and the third sound unit SU**3** may be arranged or disposed in the second direction (y-axis direction). The length of the second shielding unit SHU**2** in the first direction (x-axis direction) may be substantially equal to the length of the first sound unit SU**1** in the first direction (x-axis direction) and the length of the third sound unit SU**3** in the first direction (x-axis direction). The length of the second shielding unit SHU**2** in the second direction (y-axis direction) may be substantially smaller than the length of the first sound unit SU**1** in the second direction (y-axis direction) and the length of the third sound unit SU**3** in the second direction (y-axis direction).

[0413] In order to avoid the sound or vibration by the second sound unit SU**2** and the sound or vibration by the fourth sound unit SU**4** from affecting each other, the third shielding unit SHU**3** may be disposed between the second sound unit SU**2** and the fourth sound unit SU**4**. The second sound unit SU**2**, the third shielding unit SHU**3** and the fourth sound unit SU**4** may be arranged or disposed in the second direction (y-axis direction). The length of the third shielding unit SHU**3** in the first direction (x-axis direction) may be substantially equal to the length of the second sound unit SU**2** in the first direction (x-axis direction) and the length of the fourth sound unit SU**4** in the first direction (x-axis direction). The length of the third shielding unit SHU**3** in the second direction (y-axis direction) may be substantially smaller than the length of the second sound unit SU**2** in the

second direction (y-axis direction) and the length of the fourth sound unit SU4 in the second direction (y-axis direction).

[0414] In order to avoid the sound or vibration by the third sound unit SU3 and the sound or vibration by the fourth sound unit SU4 from affecting each other, the fourth shielding unit SHU4 may be disposed between the third sound unit SU3 and the fourth sound unit SU4. The third sound unit SU3, the fourth shielding unit SHU4 and the fourth sound unit SU4 may be arranged or disposed in the first direction (x-axis direction). The length of the fourth shielding unit SHU4 in the first direction (x-axis direction) may be smaller than the length of the third sound unit SU3 in the first direction (x-axis direction) and the length of the fourth sound unit SU4 in the first direction (x-axis direction). The length of the fourth shielding unit SHU4 in the second direction (y-axis direction) may be substantially equal to the length of the third sound unit SU3 in the second direction (y-axis direction) and the length of the fourth sound unit SU4 in the second direction (y-axis direction).

[0415] Each of the shielding units SHU1, SHU2, SHU3 and SHU4 may include a first shielding electrode, a second shielding electrode, and a shielding vibration layer disposed between the first shielding electrode and the second shielding electrode in the third direction (z-axis direction). The shielding vibration layer may be mechanically deformed by the inverse piezoelectric effect in a case that the first shielding driving voltage is applied to the first shielding electrode and the second shielding driving voltage is applied to the second shielding electrode. In addition, in a case that the vibration layer is mechanically deformed, it may generate voltage on the first shielding electrode and the second shielding electrode by the piezoelectric effect. Each of the shielding units SHU1, SHU2, SHU3 and SHU4 may vibrate the shielding vibration layer by the inverse piezoelectric effect.

[0416] The first sound electrode of the first sound unit SU1, the second shielding electrode of the first shielding unit SHU1 and the first sound electrode of the second sound unit SU2 may be electrically connected to the first horizontal sound line HSOL1. The first sound electrode of the third sound unit SU3, the second shielding electrode of the fourth shielding unit SHU4 and the first sound electrode of the fourth sound unit SU2 may be electrically connected to the second horizontal sound line HSOL2.

[0417] The second sound electrode of the first sound unit SU1, the first shielding electrode of the second shielding unit SHU2 and the second sound electrode of the third sound unit SU3 may be electrically connected to the first vertical sound line VSOL1. The second sound electrode of the second sound unit SU2, the first shielding electrode of the fourth shielding unit SHU4 and the second sound electrode of the fourth sound unit SU4 may be electrically connected to the second vertical sound line VSOL2.

[0418] The second shielding electrode of the second shielding unit SHU2 and the first shielding electrode of the third shielding unit SHU3 may be electrically connected to the horizontal shielding line HSHL. The first shielding electrode of the first shielding unit SHU1 and the second shielding electrode of the fourth shielding unit SHU4 may be electrically connected to the vertical shielding line VSHL.

[0419] The first horizontal connection line HSOL1, the second horizontal connection line HSOL2, the first vertical connection line VSOL1 and the second vertical connection line VSOL2 may be electrically connected to the sound pads SP, while the horizontal shielding line HSHL and the vertical shielding line VSHL may be electrically connected to the shielding pads SHP. The sound pads SP and the shielding pads SHP may be electrically connected to the display circuit board **310** in a case that the subsidiary area SBA is bent and disposed on the lower surface of the display panel **300**.

[0420] The sound driver **340** may apply the first shielding driving voltage to the vertical shielding line VSHL. The first shielding driving voltage may be substantially equal to the first vertical sound driving voltage applied to the first vertical sound driving line VSOL1 or the second vertical sound driving voltage applied to the second vertical sound driving line VSOL2. Accordingly, the sound waves or vibration waves by the first shielding unit SHU1 may be in anti-phase with the sound waves or vibration waves by the first sound unit SU1 or by the second sound unit SU2. Therefore, it is possible to prevent the sound or vibration by the first sound unit SU1 and the sound or vibration by the second sound unit SU2 from affecting each other. In addition, the sound waves or vibration waves by the fourth shielding unit SHU4 may be in anti-phase with the sound waves or vibration waves by the third sound unit SU3 or by the fourth sound unit SU4. Therefore, it is possible to avoid the sound or vibration by the third sound unit SU3 and the sound or vibration by the fourth sound unit SU4 from affecting each other.

[0421] The sound driver **340** may apply the second shielding driving voltage to the horizontal shielding line HSHL. The second shielding driving voltage may be substantially equal to the first horizontal sound driving voltage applied to the first horizontal sound driving line HSOL1 or the second horizontal sound driving voltage applied to the second horizontal sound driving line HSOL2. Accordingly, the sound waves or vibration waves by the second shielding unit SHU2 may be in anti-phase with the sound waves or vibration waves by the first sound unit SU1 or by the third sound unit SU4. Therefore, it is possible to avoid the sound or vibration by the second sound unit SU2 and the sound or vibration by the third sound unit SU3 from affecting each other. In addition, the sound waves or vibration waves by the third shielding unit SHU3 may be in anti-phase with the sound waves or vibration waves by the second sound unit SU2 or by the fourth sound unit SU4. Therefore, it is possible to avoid the sound or vibration by the second sound unit SU2 and the sound or vibration by the fourth sound unit SU4 from affecting each other.

[0422] As shown in FIG. **41**, the sound units SU1, SU2, SU3 and SU4 is arranged or disposed in an m-by-n matrix, where m and n are positive integers, and the shielding units SHU1, SHU2, SHU3 and SHU4 may be disposed between the sound units SU1, SU2, SU3 and SU4. Accordingly, it is possible to suppress the sound units SU1, SU2, SU3 and SU4 from affecting each other.

[0423] In addition, the first sound electrodes of the sound units and the second shielding electrodes of the shielding unit arranged or disposed in the same row may be electrically connected to the same horizontal sound line, and the second sound electrodes of the sound units and the first shielding electrode of the shielding unit arranged or disposed in the same column may be electrically connected to the same vertical sound line. Therefore, it is possible to

reduce the number of shielding lines for driving the shielding units SHU1, SHU2, SHU3 and SHU4, and to shield sound by driving the shielding units SHU1, SHU2, SHU3 and SU4 individually or simultaneously.

[0424] FIG. **42** is a schematic cross-sectional view taken along line XI-XI' of FIG. **41**. FIG. **43** is a schematic cross-sectional view taken along line XII-XII' of FIG. **41**. FIGS. **42** and **43** show a schematic cross section of the third shielding unit SHU3.

[0425] Referring to FIGS. **42** and **43**, the second vertical sound line VSOL2, the horizontal shielding line HSHL, the vertical shielding line VSHL, the first sound electrodes SOE1, and the second shielding electrode SHE2 may be formed or disposed on the light-shielding member LSM. The first horizontal sound line HSOL1, the second horizontal sound line HSOL2 and the first vertical sound line VSOL1 may also be formed or disposed on the light-shielding member LSM. The first horizontal sound line HSOL1, the second horizontal sound line HSOL2, the first vertical sound line VSOL1, the second vertical sound line VSOL2, the horizontal shielding line HSHL, the vertical shielding line VSHL, the first sound electrodes SOE1 and the second shielding electrodes SHE2 may be made of the same or similar material. The horizontal shielding line HSHL may be electrically connected to the second shielding electrode SHE2. The second vertical sound line VSOL2 may be electrically separated from the second shielding electrode SHE2. The first horizontal sound line HSOL1, the second horizontal sound line HSOL2, the first vertical sound line VSOL1, the second vertical sound line VSOL2, the horizontal shielding line HSHL, the vertical shielding line VSHL, the first sound electrodes SOE1 and the second shielding electrodes SHE2 may include a conductive metal material.

[0426] A shielding vibration layer SHPEL may be formed or disposed on the second shielding electrode SHE2. The shielding vibration layer SHPEL may be a piezoelectric material or an electroactive polymer that may be deformed according to a voltage applied to the first shielding electrode SHE1 and a voltage applied to the second shielding electrode SHE2. The piezoelectric material may include plumbum zirconate titanate (PZT), and the electroactive polymer may include a ferroelectric polymer such as polyvinylidene fluoride (PVDF) and poly(vinylidenefluoride-co-trifluoroethylene) (P(VDF-TrFE)). The electroactive polymer may include piezoelectric particles such as ZnO and $BaTiO_3$ to increase the piezoelectric effect. The third shielding unit SHU3 may provide a user with a haptic feedback by vibrating the shielding vibration layer SHPEL by the inverse piezoelectric effect.

[0427] The second vertical sound line VSOL2 may be formed or disposed on side surfaces of the shielding vibration layer SPEL of the third shielding unit SHU3. The first shielding electrode SHE1 may be formed or disposed on the shielding vibration layer SHPEL of the third shielding unit SHU3. The shielding vibration layer SHPEL may be disposed between the first shielding electrode SHE1 and the second shielding electrode SHE2 in the third direction (z-axis direction). The first shielding electrode SHE1 may include a conductive metal material. In order to prevent a short-circuit between the second shielding electrode SHE2 and the second vertical sound line VSOL2, the length of the second shielding electrode SHE2 in the second direction (y-axis direction) may be smaller than the length L2 of the shielding vibration layer SHPEL in the second direction (y-axis direction) as shown in FIG. **43**.

[0428] As shown in FIG. **41**, the sound electrode layer SOEL including the first sound electrodes SOE1, the second sound electrodes SOE2, the first shielding electrodes SHE1, the second shielding electrode SHE2, the first vibration layers SPEL and the shielding vibration layers SHPEL may be disposed between the substrate SUB of the display panel **300** and the bottom panel cover PB. Therefore, sound may be output by vibrating the first vibration layers SPEL by the first sound electrodes SOE1 and the second sound electrodes SOE2 of the sound electrode layer SOEL, and it is possible to avoid the sounds by the sound units SU1, SU2, SU3 and SU4 from affecting each other by vibrating the second vibration layer VPEL by the first vibration electrodes VE1 and the second vibration electrodes VE2. Sound may be output using the sound units incorporated into the display panel, and it is possible to suppress the sounds by the sound units SU1, SU2, SU3 and SU4 from interfering each other.

[0429] FIG. **44** is a view showing a layout of a display panel according to an embodiment.

[0430] An embodiment of FIG. **44** may be different from an embodiment of FIGS. **30** and **31** in that a sound electrode layer SOEL may include force sensing units PU1, PU2 and PU3.

[0431] Referring to FIG. **44**, the force sensing units PU1, PU2 and PU3 may be disposed on the lower surface of the substrate SUB of the display panel **300**. The first force sensing unit PU1 may be disposed on the right side of the display panel **300**, the second force sensing unit PU2 may be disposed at the center of the display panel **300**, and the third force sensing unit PU3 may be disposed on the left side of the display panel **300**. It is, however, to be understood that the disclosure is not limited thereto. For example, the first force sensing unit PU1 may be disposed on the upper side of the display panel **300**, the second force sensing unit PU2 may be disposed at the center of the display panel **300**, and the third force sensing unit PU3 may be disposed on the lower side of the display panel **300**.

[0432] Each of the force sensing units PU1, PU2 and PU3 may be electrically connected to one force driving line PTL and one force sensing line PRL. The first force sensing unit PU1 may be electrically connected to the force driving line PTL and the first force sensing line PRL1. The second force sensing unit PU2 may be electrically connected to the force driving line PTL and the second force sensing line PRL2. The third force sensing unit PU3 may be electrically connected to the force driving line PTL and the third force sensing line PRL3. The force sensing units PU1, PU2 and PU3 may be commonly connected to the force driving line PTL.

[0433] The force driving line PTL, the first force sensing line PRL1, the second force sensing line PRL2 and the third force sensing line PRL3 may be electrically connected to the force pads PP. The force pads PP may be electrically connected to the display circuit board **310** in a case that the subsidiary area SBA is bent and disposed on the lower surface of the display panel **300**.

[0434] A force driver **350** may be disposed on the display circuit board **310** and may be implemented as an integrated circuit. The force driver **350** may be implemented as a single integrated circuit with the sensor driver **330** and/or the sound driver **340**. The force driver **350** outputs a force driving signal to the force driving line PTL and senses current values

or voltage values through the first force sensing line PRL**1**, the second force sensing line PRL**2** and the third force sensing line PRL**3**. Accordingly, it is possible to determine whether a force is applied to the force sensing units PU**1**, PU**2** and PU**3**.

[0435] As shown in FIG. **44**, the sound electrode layer SOEL may include the force sensing units PU**1**, PU**2** and PU**3**, and thus the display device **10** may determine whether a force is applied by the user.

[0436] FIG. **45** is a view showing a layout of the force driving electrode, the force sensing electrode, the force driving line and the first force sensing line of the first force sensing unit of FIG. **44**. FIG. **46** is a schematic cross-sectional view taken along line XIII-XIII' of FIG. **45**.

[0437] Referring to FIGS. **45** and **46**, the first force sensing unit PU**1** may include a force driving electrode PTE, a force sensing electrode PRE, and a force sensitive layer PSL. The force driving electrode PTE may include a driving stem electrode TSE and driving branch electrodes TBE, and the force sensing electrode PRE may include a sensing stem electrode RSE and sensing branch electrodes RBE.

[0438] An end of the driving stem electrode TSE in the second direction (y-axis direction) may be electrically connected to the force driving line PTL. Each of the driving branch electrodes TBE branches off from the driving stem electrode TSE in the first direction (x-axis direction).

[0439] An end of the sensing stem electrode RSE in the second direction (y-axis direction) may be electrically connected to the first force sensing line PRL**1**. Each of the sensing branch electrodes RBE branches off from the sensing stem electrode RSE in the first direction (x-axis direction).

[0440] The driving branch electrodes TBE and the sensing branch electrodes RBE may be electrically separated from each other. The driving branch electrodes TBE and the sensing branch electrodes RBE may be arranged or disposed in parallel with each other. The driving branch electrodes TBE and the sensing branch electrodes RBE may be arranged or disposed alternately in the second direction (y-axis direction). They may be arranged or disposed repeatedly in the second direction (y-axis direction) in the order of the driving branch electrode TBE, the sensing branch electrode RBE, the driving branch electrode TBE, the sensing branch electrode RBE, and so on.

[0441] The force driving line PTL, the first force sensing line PRL**1**, the force driving electrode PTE and the force sensing electrode PRE may be disposed on the light-shielding member LSM. The force driving line PTL, the first force sensing line PRL**1**, the force driving electrode PTE and the force sensing electrode PRE may be made of the same or similar material. The force driving line PTL, the first force sensing line PRL**1**, the force driving electrode PTE and the force sensing electrode PRE may include a conductive material.

[0442] The force sensitive layer PSL may be disposed on the driving branch electrodes TBE and the sensing branch electrodes RBE. The force sensitive layer PSL may include a polymer resin having a force sensitive material. The force sensitive material may be metal microparticles (or metal nanoparticles) such as nickel, aluminum, titanium, tin and copper. For example, the force sensitive layer PSL may be a quantum tunneling composite (QTC). In a case that a force is applied in the third direction (z-axis direction), the resistance of the force sensitive layer PSL may be reduced. Since the resistance of the force sensitive layer PSL changes according to the force applied to the first force sensing unit PU**1**, the current value or the voltage value detected by the force sensing electrode PRE may change. The force driver **350** may determine whether the force is applied by the user based on the current value or the voltage value detected by the force sensing electrode PRE. Therefore, the first force sensing unit PU**1** may be used as an input device for detecting a user's input.

[0443] On the force sensitive layer PSL, a bump BMP may be disposed to press the force sensitive layer PSL according to the user's force. The bump BMP may be made of the same or similar material as the second sound electrode SOE**2** of each of the sound units SU**1**, SU**2**, SU**3** and SU**4**.

[0444] FIG. **47** is a view showing a layout of a display panel according to an embodiment. FIG. **48** is a schematic cross-sectional view taken along line XIV-XIV' of FIG. **47**. FIGS. **49** and **50** are views showing a change in the vibration layer according to the fixed magnetic field of the magnet of FIG. **47**, the induced magnetic field of a coil, and the voltage applied to the first sound electrode and the second sound electrode.

[0445] An embodiment of FIGS. **47** to **50** may be different from an embodiment of FIGS. **31** to **34** in that a sound electrode layer SOEL may include planar coils CP**1**, CP**2**, CP**3** and CP**4**.

[0446] Referring to FIG. **47**, a first planar coil CP**1**, a first fixed magnet and a first sound unit SU**1** may be disposed to overlap one another in the third direction (z-axis direction), and a second planar coil CP**2**, a second fixed magnet and a second sound unit SU**2** may be disposed to overlap one another in the third direction (z-axis direction). A third planar coil CP**3**, a third fixed magnet and a third sound unit SU**3** may be disposed to overlap one another in the third direction (z-axis direction), and a fourth planar coil CP**4**, a fourth fixed magnet MGN**4** and a fourth sound unit SU**4** may be disposed to overlap a fourth sound unit PU**4** in the third direction (z-axis direction).

[0447] The first fixed magnet may be disposed on the second sound electrode SOE**2** of the first sound unit PU**1**. The second fixed magnet may be disposed on the second sound electrode SOE**2** of the second sound unit PU**2**. The third fixed magnet may be disposed on the second sound electrode SOE**2** of the third sound unit PU**3**. The fourth fixed magnet MGN**4** may be disposed on the second sound electrode SOE**2** of the fourth sound unit PU**4** as shown in FIG. **48**.

[0448] The planar coils CP**1**, CP**2**, CP**3** and CP**4** may be disposed on one surface of the base film **431** of a heat dissipation member **430**. The surface of the base film **431** of the heat dissipation member **430** may face the substrate SUB. Alternatively, the surface of the base film **431** of the heat dissipation member **430** may be the opposite surface of the surface facing the substrate SUB as shown in FIG. **48**.

[0449] One end of the first planar coil CP**1** may be electrically connected to a first coil line CIL**1**, and the other end thereof may be electrically connected to a second coil line CIL**2**. One end of the second planar coil CP**2** may be electrically connected to a third coil line CIL**3**, and the other end thereof may be electrically connected to a third coil line CIL**4**. One end of the third planar coil CP**3** may be electrically connected to a fifth coil line CIL**5**, and the other end thereof may be electrically connected to a sixth coil line CIL**6**. One end of the fourth planar coil CP**4** may be

electrically connected to a seventh coil line CIL**7**, and the other end thereof may be electrically connected to an eighth coil line CIL**8**.

[0450] The coil lines CIL**1** to CIL**8** may be electrically connected to coil pads COP. The coil pads may be electrically connected to the display circuit board **310** in a case that the subsidiary area SBA is bent and disposed on the lower surface of the display panel **300**.

[0451] The sound driver **340** may apply a current so that an induced magnetic field may be formed by each of the planar coils CP**1**, CP**2**, CP**3** and CP**4**. For example, the sound driver **340** may repeat applying a current so that the current flows from the seventh coil line CIL**7** to the eighth coil line CIL**8** as shown in FIG. **49**, and applying a current so that the current flows from the eighth coil line CIL**8** to the seventh coil line CIL**7** as shown in FIG. **50**. In a case that a current flows from the seventh coil line CIL**7** to the eighth coil line CIL**8** as shown in FIG. **49**, an attractive force (or repulsive force) may occur between the fixed magnet MGN and the fourth planar coil CP**4**. In a case that a current flows from the seventh coil line CIL**7** to the eighth coil line CIL**8** as shown in FIG. **50**, an attractive force (or repulsive force) may occur between the fixed magnet MGN and the fourth planar coil CP**4**.

[0452] The sound driver **340** may apply current to the coil lines CIL**1** to CIL**8** in synchronization with sound driving voltages for outputting sound by the sound units SU**1**, SU**2**, SU**3** and SU**4**. For example, the sound driver **340** may apply a current to the first planar coil CP**1** so that the current flows from the seventh coil line CIL**7** to the eighth coil line CIL**8** while the positive first horizontal sound driving voltage and the negative first vertical sound driving voltage may be applied for driving the first sound unit SU**1**. In addition, the sound driver **340** may apply a current to the first planar coil CP**1** so that the current flows from the eighth coil line CIL**8** to the seventh coil line CIL**7** while the negative first horizontal sound driving voltage and the positive first vertical sound driving voltage may be applied for driving the first sound unit SU**1**.

[0453] As shown in FIGS. **47** to **50**, the fixed magnets MGN**4** may be disposed on the second sound electrodes SOE**2** of the sound units SU**1**, SU**2**, SU**3** and SU**4**, respectively, such that the planar coils CP**1**, CP**2**, CP**3** and CP**4** overlap the fixed magnets MGN**4**, respectively. In such case, by controlling the direction of current flowing through each of the planar coils CP**1**, CP**2**, CP**3** and CP**4**, it is possible to generate an attractive force and a repulsive force between the fixed magnets and the planar coils CP**1**, CP**2**, CP**3** and CP**4**. It is possible to increase the vibration displacement of the sound units SU**1**, SU**2**, SU**3** and SU**4** by synchronizing the vibrations of the vibration layer PEL of the sound units SU**1**, SU**2**, SU**3** and SU**4** with the vibrations by the attractive force and repulsive force between the fixed magnets and the planar coils CP**1**, CP**2**, CP**3** and CP**4**. Therefore, it is possible to increase the sound pressure level of the low tone of the sound generated by each of the sound units SU**1**, SU**2**, SU**3** and SU**4**.

[0454] FIG. **51** is a perspective view of a display device according to an embodiment. FIG. **52** is a perspective view showing a display panel according to an embodiment. FIG. **53** is a development view showing a display panel according to an embodiment.

[0455] An embodiment of FIGS. **51** to **53** may be different from an embodiment of FIGS. **1** and **2** in that images may be displayed on side surfaces of a display device.

[0456] Referring to FIGS. **51** to **53**, a cover window **100** may include an upper surface PS**100**, a first side surface SS**100**, a second side surface SS**200**, a third side surface SS**300**, a fourth side surface SS**400**, a first corner portion CS**100**, a second corner portion CS**200**, a third corner portion CS**300**, and a fourth corner portion CS**400**.

[0457] The upper surface PS**100** of the cover window **100** may have, but is not limited to, a substantially rectangular shape having shorter sides in the first direction (x-axis direction) and longer sides in the second direction (y-axis direction) in a case that the cover window **100** is viewed from the top. The upper surface PS**100** may have other substantially polygonal shape, a circular shape or an oval shape in a case that the upper surface PS**100** is viewed from the top. The corners where the shorter sides and the longer side meet on the upper surface PS**100** may be bent with a certain or predetermined curvature. Although the upper surface PS**100** is flat in the example shown in FIG. **51**, the disclosure is not limited thereto. The upper surface PS**100** may include a curved surface.

[0458] The first side surface SS**100** of the cover window **100** may be extended from a first side of the upper surface PS**100**. For example, as shown in FIG. **51**, the first side surface SS**100** may be extended from the left side of the upper surface PS**100** and may be the left side surface of the cover window **100**.

[0459] The second side surface SS**200** of the cover window **100** may be extended from a second side of the upper surface PS**100**. For example, as shown in FIG. **51**, the second side surface SS**200** may be extended from the lower side of the upper surface PS**100** and may be the lower side surface of the cover window **100**.

[0460] The first side surface SS**100** of the cover window **100** may be extended from a third side of the upper surface PS**100**. For example, as shown in FIG. **51**, the third side surface SS**300** may be extended from the upper side of the upper surface PS**100** and may be the upper side surface of the cover window **100**.

[0461] The first side surface SS**100** of the cover window **100** may be extended from a fourth side of the upper surface PS**100**. For example, as shown in FIG. **51**, the fourth side surface SS**400** may be extended from the right side of the upper surface PS**100** and may be the right side surface of the cover window **100**.

[0462] The first corner portion CS**100** of the cover window **100** may be extended from the first corner where the first side and the second side of the upper surface PS**100** meet. The first corner portion CS**1** may be located or disposed between the first side surface SS**100** and the second side surface SS**200**.

[0463] The second corner portion CS**200** of the cover window **100** may be extended from the second corner where the first side and the third side of the upper surface PS**100** meet. The second corner portion CS**200** may be located or disposed between the first side surface SS**100** and the third side surface SS**300**.

[0464] The third corner portion CS**300** of the cover window **100** may be extended from the third corner where the second side and the fourth side of the upper surface PS**100**

meet. The third corner portion CS**300** may be located or disposed between the second side surface SS**200** and the fourth side surface SS**400**.

[0465] The fourth corner portion CS**400** of the cover window **100** may be extended from the fourth corner where the third side and the fourth side of the upper surface PS**100** meet. The fourth corner portion CS**400** may be located or disposed between the third side surface SS**300** and the fourth side surface SS**400**.

[0466] The upper surface PS**100**, the first side surface SS**100**, the second side surface SS**200**, the third side surface SS**300** and the fourth side surface SS**400** of the cover window **100** may be formed as transmissive portions that transmit light. The first corner portion CS**100**, the second corner portion CS**200**, the third corner portion CS**300** and the fourth corner portion CS**400** may be, but is not limited to, light-blocking portions that do not transmit light. The first corner portion CS**100**, the second corner portion CS**200**, the third corner portion CS**300** and the fourth corner portion CS**400** of the cover window **100** may also be formed as transmissive portions.

[0467] As shown in FIG. **52**, the display panel **300** may include a substrate having an upper surface PS, a first side surface SS**1**, a second side surface SS**2**, a third side surface SS**3**, a fourth side surface SS**4**, a first corner portion CS**1**, a second corner portion CS**2**, a third corner portion CS**3**, and a fourth corner portion CS**4**.

[0468] The upper surface PS of the display panel **300** may have, but is not limited to, a substantially rectangular shape having shorter sides in the first direction (x-axis direction) and longer sides in the second direction (y-axis direction) in a case that the upper surface PS of the display panel **300** is viewed from the top. The upper surface PS may have other substantially polygonal shapes, a substantially circular shape or a substantially oval shape in a case that the upper surface PS of the display panel **300** is viewed from the top. The corners where the shorter sides and the longer side meet on the upper surface PS may be bent with a certain or predetermined curvature. Although the upper surface PS is flat in the example shown in FIGS. **52** and **53**, the disclosure is not limited thereto. The upper surface PS may include a curved surface.

[0469] The first side surface SS**1** of the display panel **300** may be extended from the first side of the upper surface PS. For example, as shown in FIGS. **52** and **53**, the first side surface SS**1** may be extended from the left side of the upper surface PS. The first side surface SS**1** may be bent over a first bending line BL**1**. The first bending line BL**1** may be the boundary between the upper surface PS and the first side surface SS**1**. The first side surface SS**1** may be the left side surface of the display panel **300**.

[0470] The second side surface SS**2** of the display panel **300** may be extended from the second side of the upper surface PS. For example, as shown in FIGS. **52** and **53**, the second side surface SS**2** may be extended from the lower side of the upper surface PS. The second side surface SS**2** may be bent over a second bending line BL**2**. The second bending line BL**2** may be the boundary between the upper surface PS and the second side surface SS**2**. The second side surface SS**2** may be the lower side surface of the display panel **300**.

[0471] The third side surface SS**3** of the display panel **300** may be extended from the third side of the upper surface PS. For example, as shown in FIGS. **52** and **53**, the third side surface SS**3** may be extended from the upper side of the upper surface PS. The third side surface SS**3** may be bent over a third bending line BL**3**. The third bending line BL**3** may be the boundary between the upper surface PS and the third side surface SS**2**. The third side surface SS**3** may be the upper side surface of the display panel **300**.

[0472] The fourth side surface SS**4** of the display panel **300** may be extended from the fourth side of the upper surface PS. For example, as shown in FIGS. **52** and **53**, the fourth side surface SS**4** may be extended from the right side of the upper surface PS. The fourth side surface SS**4** may be bent over a fourth bending line BL**4**. The fourth bending line BL**4** may be the boundary between the upper surface PS and the fourth side surface SS**4**. The fourth side surface SS**4** may be the right side surface of the display panel **300**.

[0473] The first corner portion CS**1** of the display panel **300** may be extended from the first corner where the first side and the second side of the upper surface PS meet. The first corner portion CS**1** may be located or disposed between the first side surface SS**1** and the second side surface SS**2**.

[0474] The second corner portion CS**2** of the display panel **300** may be extended from the second corner where the first side and the third side of the upper surface PS meet. The second corner portion CS**2** may be located or disposed between the first side surface SS**1** and the third side surface SS**3**.

[0475] The third corner portion CS**3** of the display panel **300** may be extended from the third corner where the second side and the fourth side of the upper surface PS meet. The third corner portion CS**3** may be located or disposed between the second side surface SS**2** and the fourth side surface SS**4**.

[0476] The fourth corner portion CS**4** of the display panel **300** may be extended from the fourth corner where the third side and the fourth side of the upper surface PS meet. The fourth corner portion CS**4** may be located or disposed between the third side surface SS**3** and the fourth side surface SS**4**.

[0477] A pad area PDA of the display panel **300** may be extended from one side of the second side surface SS**2**. For example, the pad area PDA may be extended from the lower side of the second side surface SS**2**. The pad area PDA may be bent over a fifth bending line BL**5**. The fifth bending line BL**5** may be the boundary between the second side surface SS**2** and the pad area PDA. The pad area PDA of the display panel **300** may be bent over the fifth bending line BL**5** to face the upper surface PS of the display panel **300**.

[0478] The upper surface PS, the first side surface SS**1**, the second side surface SS**2**, the third side surface SS**3** and the fourth side surface SS**4** of the display panel **300** may be display areas where images may be displayed. For example, the upper surface PS of the display panel **300** may be a main display area for displaying a main image, while the first to fourth side surfaces SS**1**, SS**2**, SS**3** and SS**4** may be subsidiary display areas for displaying subsidiary images.

[0479] The upper surface PS of the display panel **300** may overlap the upper surface PS**100** of the cover window **100** in the third direction (z-axis direction), and may be disposed, for example, under or below the upper surface PS**100** of the cover window **100**. The first side surface SS**1** of the display panel **300** may overlap the first side surface SS**100** of the cover window **100** in the first direction (x-axis direction), and may be disposed, for example, under or below the first side surface SS**100** of the cover window **100**. The second

side surface SS**2** of the display panel **300** may overlap the second side surface SS**200** of the cover window **100** in the second direction (y-axis direction), and may be disposed, for example, under or below the second side surface SS**200** of the cover window **100**. The third side surface SS**3** of the display panel **300** may overlap the third side surface SS**3** of the cover window **100** in the second direction (y-axis direction), and may be disposed, for example, under or below the third side surface SS**300** of the cover window **100**. The fourth side surface SS**4** of the display panel **300** may overlap the fourth side surface SS**4** of the cover window **100** in the first direction (x-axis direction), and may be disposed, for example, under or below the fourth side surface SS**400** of the cover window **100**.

[0480] The first corner portion CS**1** of the display panel **300** may overlap the first corner portion CS**100** of the cover window **100** in the third direction (z-axis direction). The second corner portion CS**2** of the display panel **300** may overlap the second corner portion CS**200** of the cover window **100** in the third direction (z-axis direction). The third corner portion CS**3** of the display panel **300** may overlap the third corner portion CS**300** of the cover window **100** in the third direction (z-axis direction). The fourth corner portion CS**4** of the display panel **300** may overlap the fourth corner portion CS**400** of the cover window **100** in the third direction (z-axis direction).

[0481] The sound units SU**1**, SU**2**, SU**3** and SU**4** may be disposed under or below the upper surface PS of the display panel **300**. The sound units SU**1**, SU**2**, SU**3** and SU**4** may be electrically connected to sound pads through sound lines as shown in FIGS. **30** and **31**. The sound lines and the sound pads are not shown in FIG. **53** for convenience of illustration.

[0482] The force sensing units PU**1**, PU**2**, PU**3** and PU**4** may overlap the side surfaces SS**1**, SS**2**, SS**3** and SS**4** of the display panel **300**, respectively. For example, the first force sensing unit PU**1** may be disposed under or below the first side surface SS**1** of the display panel **300**, and the second force sensing unit PU**2** may be disposed under or below the fourth side surface SS**4** of the display panel **300**. The third force sensing unit PU**3** may be disposed under or below the third side surface SS**3** of the display panel **300**, and the fourth force sensing unit PU**4** may be disposed under or below the fourth side surface SS**4** of the display panel **300**. Each of the force sensing units PU**1**, PU**2**, PU**3** and PU**4** may be electrically connected to the force driving line and the force sensing line as shown in FIG. **44**. The force driving line and the force sensing line are not shown in FIG. **53** for convenience of illustration. In addition, each of the force sensing units PU**1**, PU**2**, PU**3** and PU**4** may be formed as shown in FIGS. **45** and **46** to sense a user's force.

[0483] As shown in FIG. **53**, the force sensing units PU**1**, PU**2**, PU**3** and PU**4** may overlap the side surfaces SS**1**, SS**2**, SS**3** and SS**4** of the display panel **300**, respectively. In such case, as shown in FIG. **54**, in a case that the user applies a force to the first side surface PS**100** of the cover window **100** of the display device **10**, the display device **10** may sense a user's force by the first force sensing unit PU**1** disposed under or below the first side surface PS**100**.

[0484] FIG. **55** is a development view showing a display panel according to an embodiment.

[0485] An embodiment of FIG. **55** may be different from an embodiment of FIG. **53** in that a first fingerprint recognition unit FD**1** may overlap the first side surface SS**1** of the display panel **300**, and a second fingerprint recognition unit FD**2** may overlap the fourth side surface SS**4**.

[0486] Referring to FIG. **55**, the first fingerprint recognition unit FD**1** may be disposed under or below the first side surface SS**1** of the display panel **300**, and the second fingerprint recognition unit FD**2** may be disposed under or below the fourth side surface SS**4** of the display panel **300**.

[0487] Each of the first fingerprint recognition unit FD**1** and the second fingerprint recognition unit FD**2** may be a fingerprint recognition module that recognizes a user's fingerprint by optical scanning or ultrasonic scanning. The first fingerprint recognition unit FD**1** may be disposed under or below the first side surface SS**1** of the display panel **300**, and the second fingerprint recognition unit FD**2** may be disposed under or below the fourth side surface SS**4** of the display panel **300**.

[0488] If each of the first fingerprint recognition unit FD**1** and the second fingerprint recognition unit FD**2** acquires images by optical scanning, it may include an optical sensor that receives light reflected off a fingerprint of a finger and converts the light into an electrical signal. The optical sensor may be a complementary metal oxide semiconductor (CMOS) image sensor or a charge coupled device (CCD) image sensor. As light is reflected off valleys and absorbed by ridges of a fingerprint of a finger, the fingerprint pattern of the finger may be sensed by the optical sensor.

[0489] If each of the first fingerprint recognizing unit FD**1** and the second fingerprint recognizing unit FD**2** acquires images by ultrasonic scanning, it may include an ultrasonic transmitter for generating ultrasonic waves and an ultrasonic receiver for receiving ultrasonic waves. The display device **10** may obtain the pattern of a fingerprint based on the amplitude of the ultrasonic waves reflected off the fingerprint of the finger. A user's fingerprint has valleys and ridges, and the amplitude of an ultrasound wave may vary depending on whether the ultrasonic wave is reflected off valleys or ridges of the fingerprint. Therefore, the pattern of the fingerprint may be obtained based on the amplitude of the reflected ultrasonic waves.

[0490] Although the fingerprint recognition units FD**1** and FD**2** may be disposed on the first side surface SS**1** and the fourth side surface SS**4**, respectively, in the example shown in FIG. **55**, the positions of the fingerprint recognition units are not limited thereto. The fingerprint recognition unit may be disposed on the second side surface SS**2** instead of the first force sensing unit PU**1** or may be disposed on the third side surface SS**3** instead of the second force sensing unit PU**2**. Alternatively, the fingerprint recognition units may be disposed in the flat portion.

[0491] As shown in FIG. **55**, at least one fingerprint recognition sensor may overlap at least one of the side surfaces SS**1**, SS**2**, SS**3** and SS**4** of the display panel **300**. In such case, the display device **10** may recognize a user's fingerprint by the first fingerprint recognition unit FD**1** disposed under or below the first side surface PS**100**.

[0492] FIG. **56** is a development view showing a display panel according to an embodiment.

[0493] An embodiment of FIG. **56** may be different from an embodiment of FIG. **53** in that fifth to eighth sound units SU**5**, SU**6**, SU**7** and SU**8** may overlap the side surfaces SS**1**, SS**2**, SS**3** and SS**4** of the display panel **300**, respectively.

[0494] Referring to FIG. **56**, the fifth sound unit SU**5** may be disposed under or below the first side surface SS**1** of the display panel **300**, and the sixth sound unit SU**6** may be

disposed under or below the second side surface SS**2** of the display panel **300**. The seventh sound unit SU**7** may be disposed under or below the third side surface SS**3** of the display panel **300**, and the eighth sound unit SU**8** may be disposed under or below the fourth side surface SS**4** of the display panel **300**. The fifth to eighth sound units SU**5**, SU**6**, SU**7** and SU**8** may be electrically connected to sound pads through sound lines as shown in FIGS. **30** and **31**. The sound lines and the sound pads are not shown in FIG. **56** for convenience of illustration.

[0495] Although the fifth to eighth sound units SU**5**, SU**6**, SU**7** and SU**8** may be disposed in the side surfaces SS**1**, SS**2**, SS**3** and SS**4** of the display panel **300**, respectively, in the example shown in FIG. **56**, the disclosure is not limited thereto. At least one sound unit may be disposed on at least one of the side surfaces SS**1**, SS**2**, SS**3**, and SS**4** of the display panel.

[0496] Although the fifth to eighth sound units SU**5**, SU**6**, SU**7** and SU**8** may be disposed in the side surfaces SS**1**, SS**2**, SS**3** and SS**4** of the display panel **300**, respectively, as shown in FIG. **56**. As shown in FIG. **57**, the user may feel as if sound is output from the upper surface PS**100** as well as the side surfaces SS**100**, SS**200**, SS**300** and SS**400** of the cover window **100** of the display device **10**. Sound may be output from all or some or a predetermined number of the side surfaces SS**100**, SS**200**, SS**300**, and SS**400** of the cover window **100** of the display device **10**.

[0497] FIGS. **59** to **61** are views showing sound output by sound units according to an image displayed by the display device. In the example shown in FIGS. **59** to **61**, the display device **10** is a television. In the example shown in FIGS. **59** to **61**, images displayed on the display device **10** during the nth frame period, the $(n+1)^{th}$ frame period, and the $(n+2)^{th}$ frame period.

[0498] Referring to FIGS. **59** to **61**, the display device **10** may calculate an object OBJ by analyzing digital video data in each of the nth to $(n+2)^{th}$ frame periods. For example, the display device **10** may calculate pixel coordinates of the object OBJ. The display device **10** may select at least one sound unit to be driven to output sound according to the pixel coordinates of the object OBJ in each of the nth to $(n+2)^{th}$ frame periods. For example, in a case that the object OBJ is displayed adjacent to the second sound unit SU**2** during the nth frame period as shown in FIG. **59**, the second sound unit SU**2** may be driven to output sound. In addition, in a case that the object OBJ is displayed between the first sound unit SU**1** and the second sound unit SU**2** during the $(n+1)^{th}$ frame period, the first sound unit SU**1** and the second sound unit SU**2** may be driven to output sound. In addition, in a case that the object OBJ is displayed adjacent to the first sound unit SU**1** during the $(n+2)^{th}$ frame period, the first sound unit SU**1** may be driven to output sound.

[0499] As shown in FIGS. **59** to **61**, sound may be output by using at least one sound unit to be driven to output the sound according to the position of the object calculated from the digital video data. In this manner, the user may feel as if the sound is output from the object, and thus may experience more realistic sound associated with the displayed image.

What is claimed is:

1. A display device comprising:

a substrate;

a plurality of light-emitting elements disposed on the substrate;

at least one inorganic or organic layer disposed on the plurality of light-emitting elements;

a first sound electrode and a second sound electrode disposed on the at least one inorganic or organic layer, the first sound electrode electrically separated from the second sound electrode; and

a driving electrode and a sensing electrode disposed on the first sound electrode and the second sound electrode, the driving electrode electrically separated from the sensing electrode, wherein

a first sound driving voltage is applied to the first sound electrode, and a second sound driving voltage is applied to the second sound electrode, and

a touch is sensed using the driving electrode and the sensing electrode.

* * * * *