US012387384B2

(12) **United States Patent**
**Shoup et al.**

(10) **Patent No.: US 12,387,384 B2**
(45) **Date of Patent: Aug. 12, 2025**

(54) **SYSTEMS AND METHODS FOR AUGMENTED REALITY APPLICATION**

(71) Applicant: **Oshkosh Corporation**, Oshkosh, WI (US)

(72) Inventors: **Douglas A. Shoup**, Oshkosh, WI (US); **Korry D. Kobel**, Oshkosh, WI (US)

(73) Assignee: **OSHKOSH CORPORATION**, Oshkosh, WI (US)

( * ) Notice: Subject to any disclaimer, the term of this patent is extended or adjusted under 35 U.S.C. 154(b) by 0 days.

(21) Appl. No.: **17/193,373**

(22) Filed: **Mar. 5, 2021**

(65) **Prior Publication Data**

US 2021/0279914 A1 Sep. 9, 2021

**Related U.S. Application Data**

(60) Provisional application No. 62/986,008, filed on Mar. 6, 2020.

(51) **Int. Cl.**

| | |
|---|---|
| ***G06T 11/00*** | (2006.01) |
| ***G06F 3/04847*** | (2022.01) |
| ***G06V 20/20*** | (2022.01) |

(52) **U.S. Cl.**

CPC ..... ***G06T 11/00*** (2013.01); ***G06F 3/04847*** (2013.01); ***G06V 20/20*** (2022.01); *G06T 2200/24* (2013.01)

(58) **Field of Classification Search**

None

See application file for complete search history.

(56) **References Cited**

U.S. PATENT DOCUMENTS

| | | | | |
|---|---|---|---|---|
| 5,824,933 | A * | 10/1998 | Gabriel | G10H 1/0008 84/649 |
| 9,019,128 | B1 * | 4/2015 | Kim, II | G01C 23/00 701/14 |
| 9,122,499 | B2 * | 9/2015 | Bittner | G06F 11/3003 |
| 9,557,807 | B2 * | 1/2017 | Mick | G06Q 10/06 |
| 9,600,733 | B1 * | 3/2017 | Wilbert | G06V 20/62 |
| 10,048,158 | B2 * | 8/2018 | Lawler | A01G 23/081 |
| 10,216,996 | B2 * | 2/2019 | Black | G06V 20/70 |
| 10,488,215 | B1 * | 11/2019 | Yu | G01C 21/365 |
| 10,657,721 | B2 * | 5/2020 | Yin | G06F 30/00 |

(Continued)

FOREIGN PATENT DOCUMENTS

| | | |
|---|---|---|
| WO | WO-2018/222756 | 12/2018 |

OTHER PUBLICATIONS

International Search Report and Written Opinion regarding PCT PCT/US2021/021110, Dtd Jun. 9, 2021, 12 pps.

*Primary Examiner* — William L Bashore
*Assistant Examiner* — Koorosh Nehchiri
(74) *Attorney, Agent, or Firm* — FOLEY & LARDNER LLP

(57) **ABSTRACT**

A method for optimizing equipment inspection for a machine using augmented reality (AR) is shown. The method includes providing an AR application to a user interface. The method further includes displaying one or more selectable widgets on the user interface via AR functionality. The method further includes receiving, via the user interface, a selection of the selectable widget, the selection providing instructions to provide additional material based on the selectable widget. The method further includes displaying a detailed model of the machine based on the additional material received.

**20 Claims, 38 Drawing Sheets**

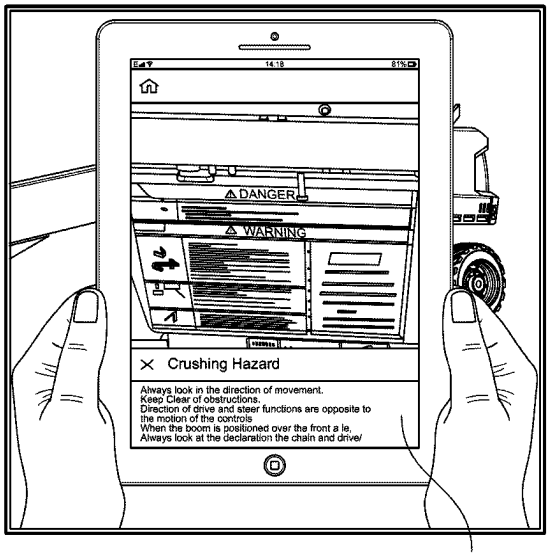

(56) **References Cited**

U.S. PATENT DOCUMENTS

| | | | | |
|---|---|---|---|---|
| 10,867,327 | B1 * | 12/2020 | Wilbert | G06Q 30/0611 |
| 10,878,240 | B2 * | 12/2020 | Laycock | G06V 10/235 |
| 2012/0251996 | A1 * | 10/2012 | Jung | G05B 19/4183 434/365 |
| 2013/0066527 | A1 * | 3/2013 | Mizuochi | E02F 9/24 701/50 |
| 2013/0281209 | A1 * | 10/2013 | Lyons | A63F 13/53 463/33 |
| 2015/0112704 | A1 * | 4/2015 | Braun | G06Q 10/10 705/2 |
| 2016/0173816 | A1 * | 6/2016 | Huenerfauth | G06Q 10/20 348/14.02 |
| 2016/0189252 | A1 * | 6/2016 | Ryan | G06Q 30/0281 705/346 |
| 2016/0258134 | A1 * | 9/2016 | Matsumoto | B60R 1/26 |
| 2017/0087465 | A1 * | 3/2017 | Lyons | G06T 19/006 |
| 2018/0129276 | A1 * | 5/2018 | Nguyen | G09B 9/00 |
| 2018/0130260 | A1 * | 5/2018 | Schmirler | G06F 3/011 |
| 2018/0253876 | A1 * | 9/2018 | Lin | G06K 7/10722 |
| 2018/0307045 | A1 * | 10/2018 | Nishi | G02B 27/017 |
| 2018/0336732 | A1 * | 11/2018 | Schuster | G06Q 10/0875 |
| 2018/0365495 | A1 * | 12/2018 | Laycock | G06K 9/2081 |
| 2019/0339841 | A1 * | 11/2019 | Nanjappan | H04W 4/029 |
| 2020/0034622 | A1 * | 1/2020 | Thakurta | G05B 15/02 |
| 2020/0074831 | A1 * | 3/2020 | Yun | G08B 21/0492 |
| 2020/0095105 | A1 | 3/2020 | Yutzy et al. | |
| 2020/0126445 | A1 * | 4/2020 | Tan | G09B 5/06 |
| 2020/0193203 | A1 * | 6/2020 | Fink | G06T 7/73 |
| 2020/0250890 | A1 * | 8/2020 | Zhou | G06T 7/55 |
| 2020/0252302 | A1 * | 8/2020 | Lairsey | G06K 9/00671 |
| 2020/0293778 | A1 * | 9/2020 | Elliott | B66F 7/00 |
| 2020/0394012 | A1 * | 12/2020 | Wright, Jr. | G06F 3/011 |
| 2021/0060366 | A1 | 3/2021 | Minnick et al. | |

* cited by examiner

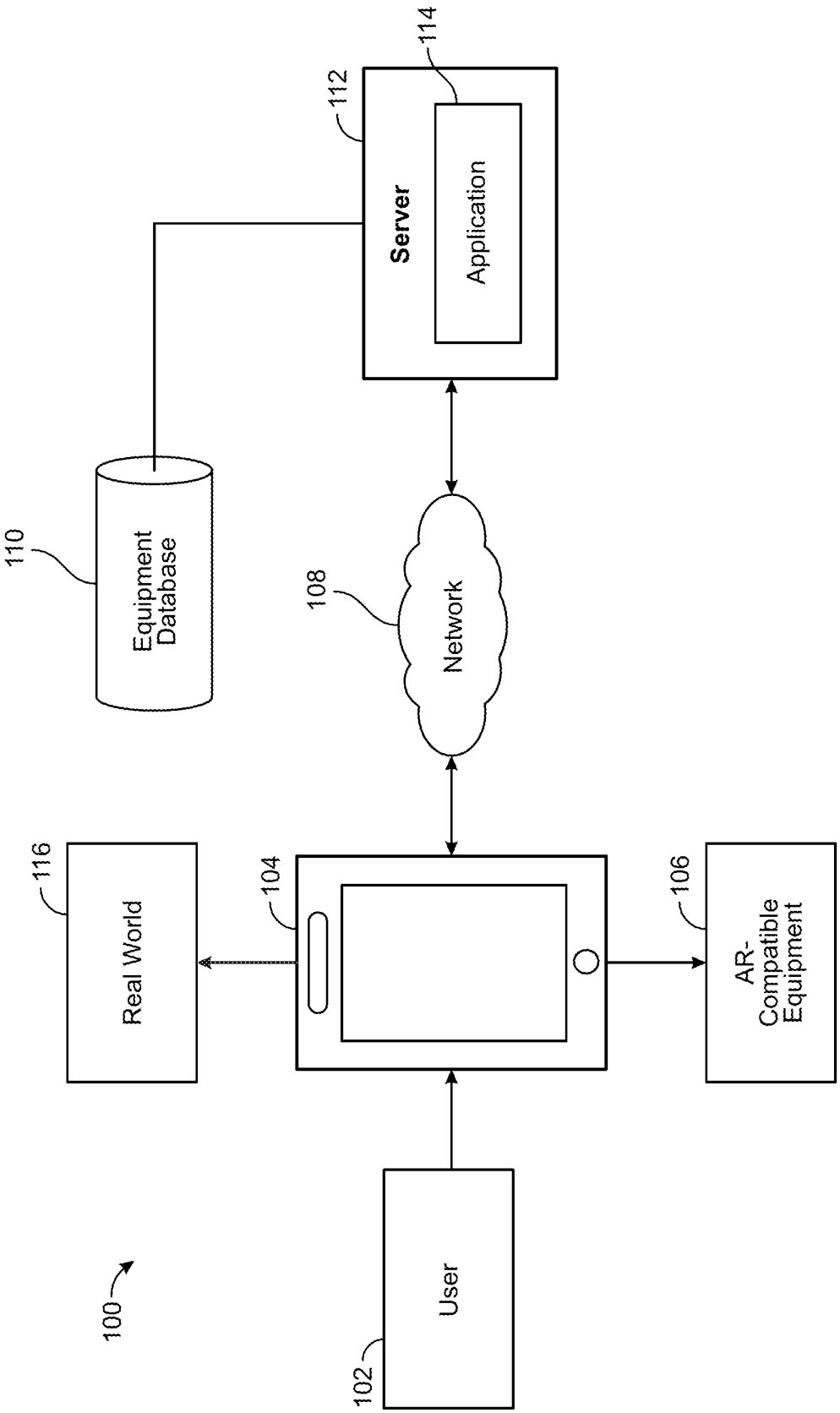
100
User
102
Real World
116
104
AR-Compatible Equipment
106
Network
108
Equipment Database
110
Server
112
Application
114

FIG. 1

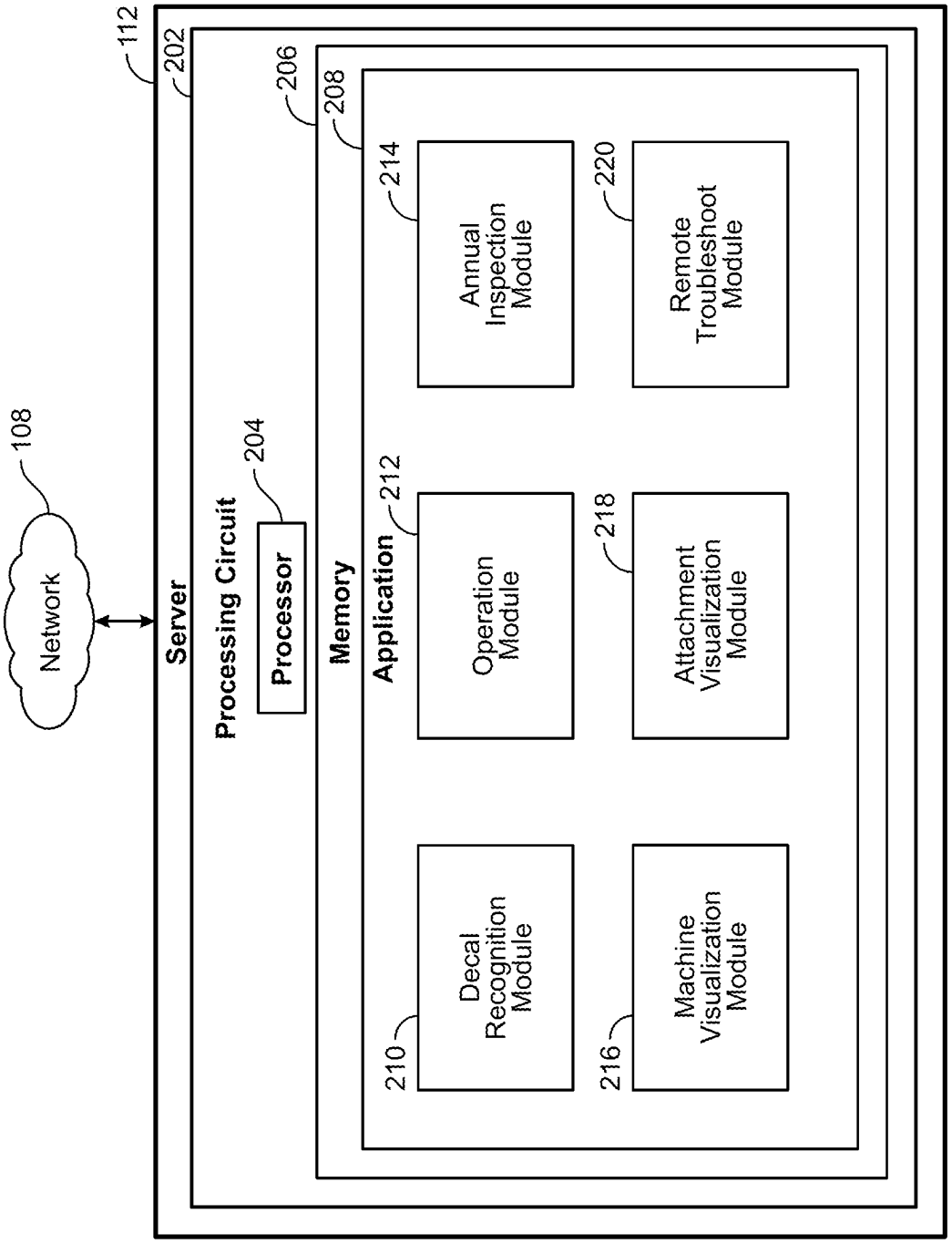
112
202
206
208
214
Annual Inspection Module
220
Remote Troubleshoot Module
108
204
Network
Server
Processing Circuit
Processor
Memory
Application
212
Operation Module
218
Attachment Visualization Module
210
Decal Recognition Module
216
Machine Visualization Module

FIG. 2A

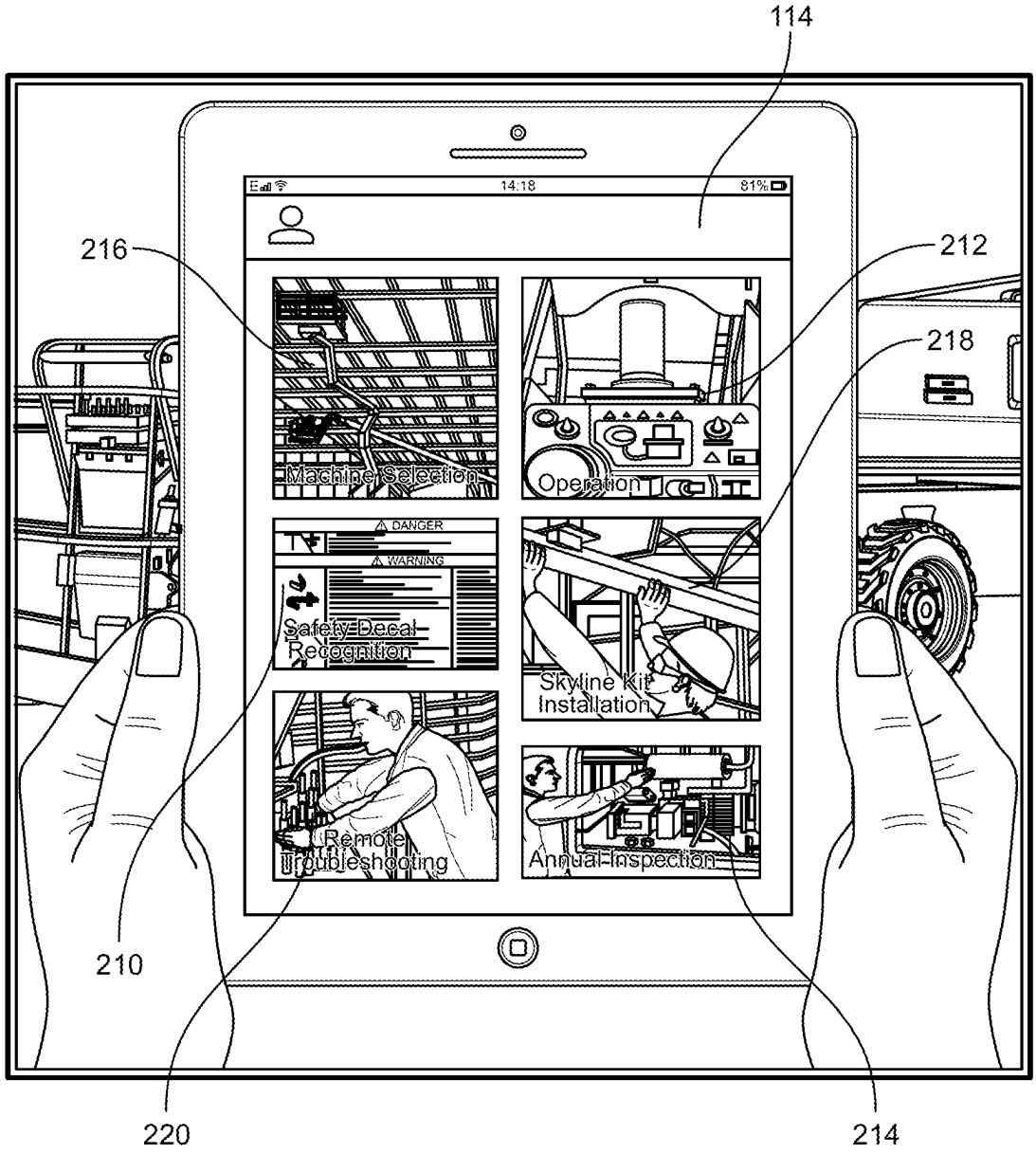
114
216
212
218
14:18
81%
Machine Selection
Operation
DANGER
WARNING
Safety Decal Recognition
Skyline Kit Installation
Remote Troubleshooting
Annual Inspection
210
220
214

FIG. 2B

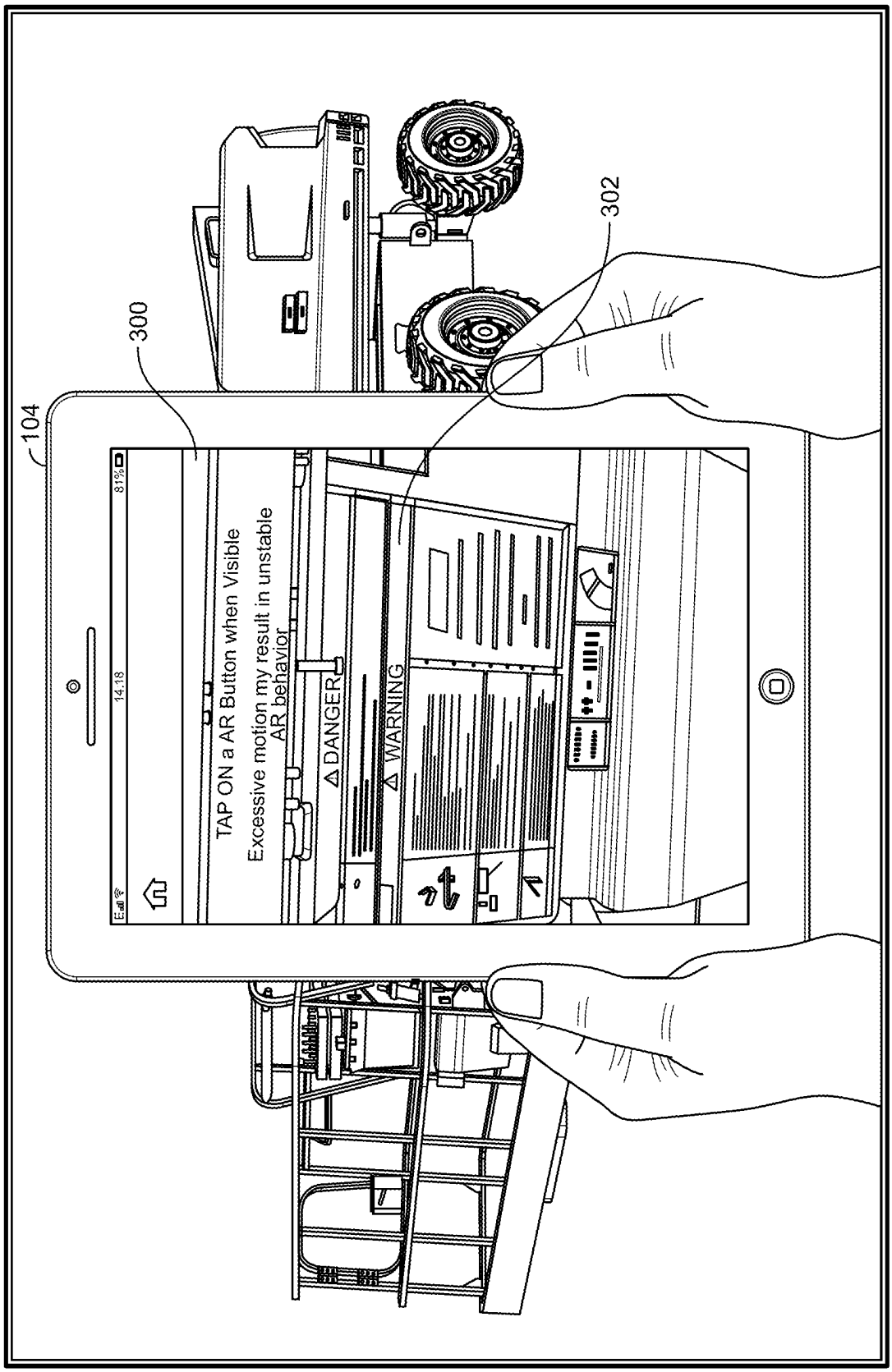
104
300
302
14:18
81%
TAP ON a AR Button when Visible
Excessive motion my result in unstable AR behavior
DANGER
WARNING

FIG. 3A

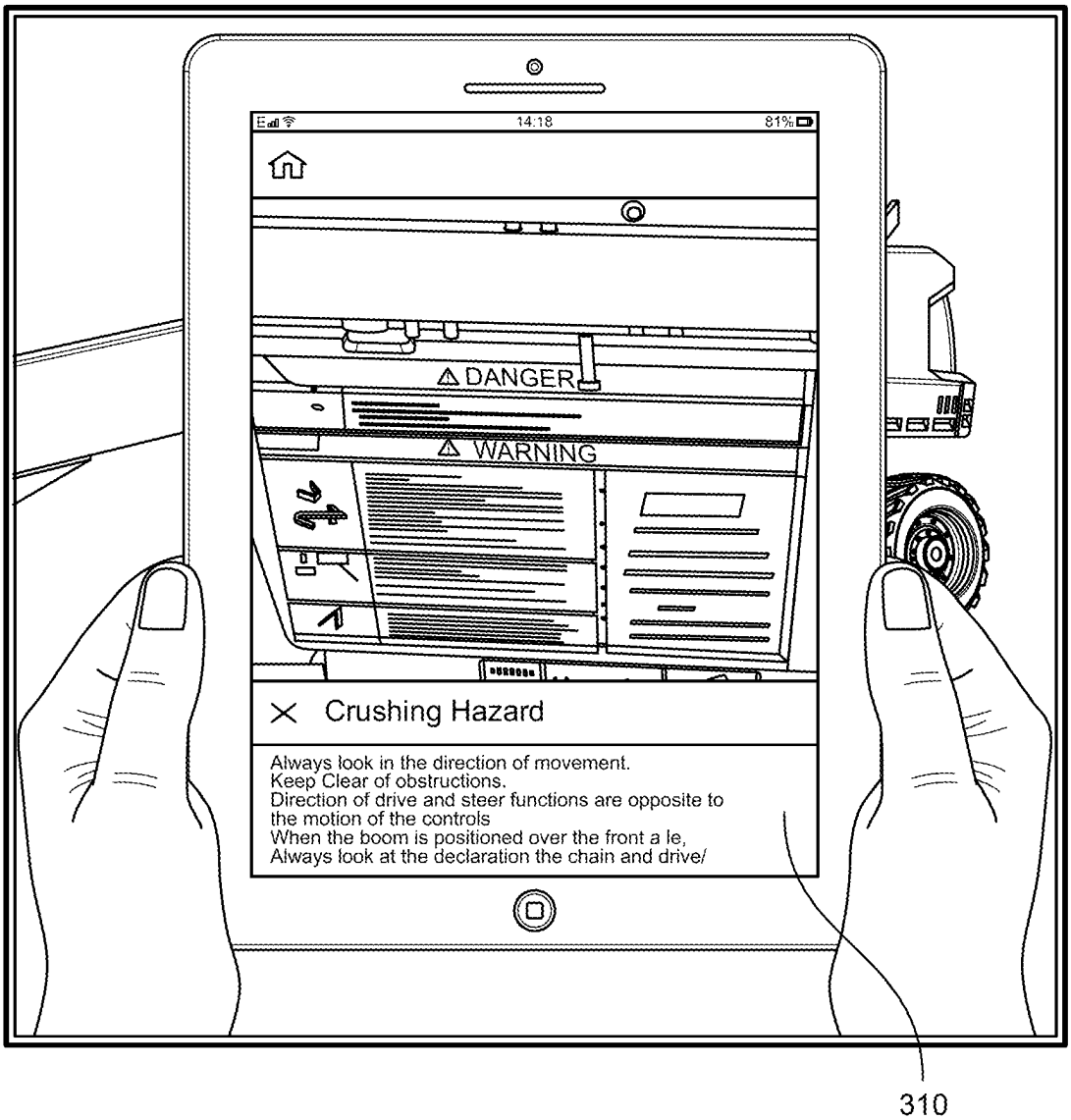
14:18
81%
DANGER
WARNING
Crushing Hazard
Always look in the direction of movement.
Keep Clear of obstructions.
Direction of drive and steer functions are opposite to the motion of the controls
When the boom is positioned over the front a le,
Always look at the declaration the chain and drive/
310

FIG. 3B

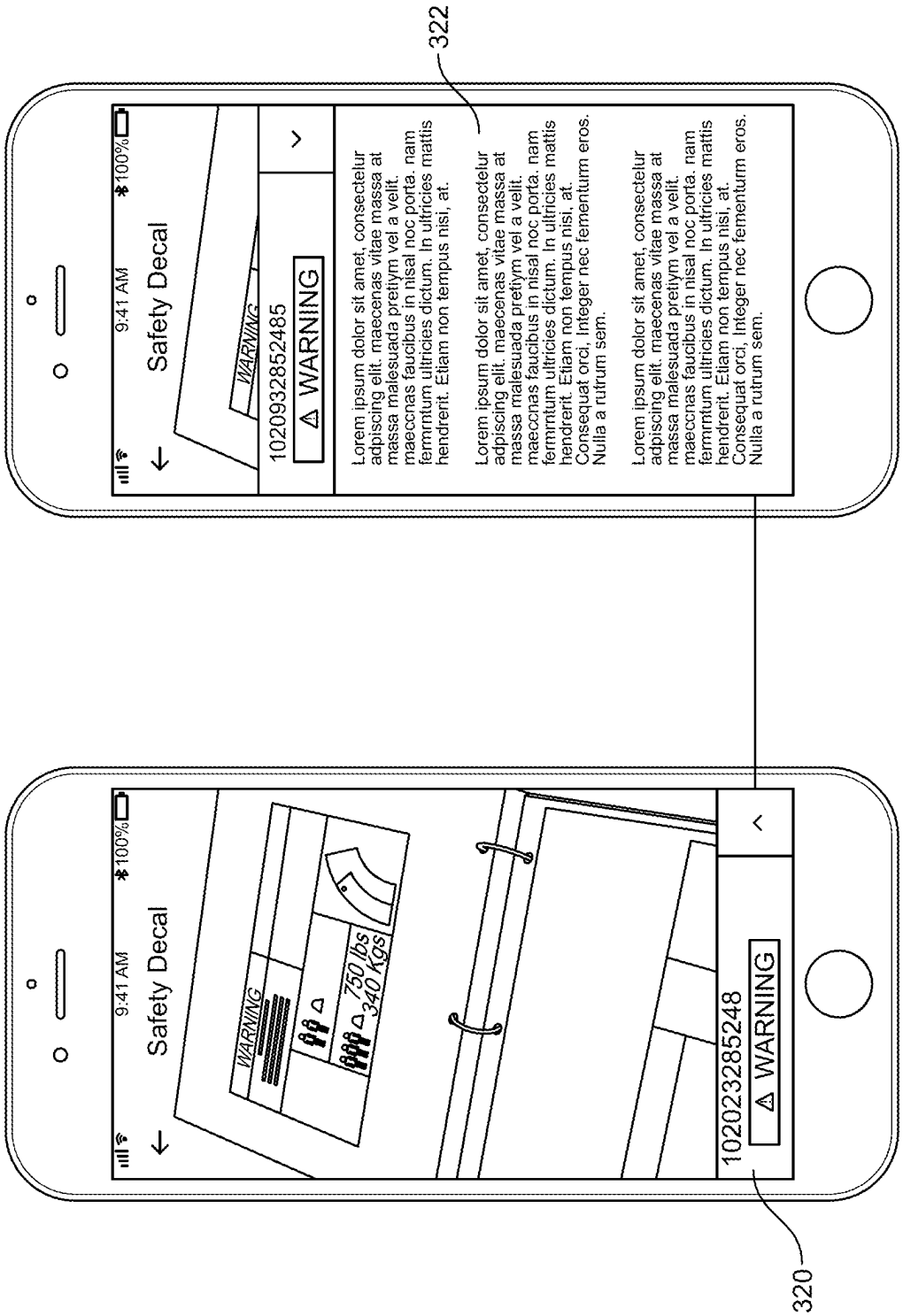
322
9:41 AM
100%
Safety Decal
WARNING
1020932852485
WARNING
Lorem ipsum dolor sit amet, consectelur adpiscing elit. maecenas vitae massa at massa malesuada pretiym vel a velit. maeccnas faucibus in nisal noc porta. nam fermrntum ultricies dictum. In ultricies mattis hendrerit. Etiam non tempus nisi, at.
Lorem ipsum dolor sit amet, consectelur adpiscing elit. maecenas vitae massa at massa malesuada pretiym vel a velit. maeccnas faucibus in nisal noc porta. nam fermrntum ultricies dictum. In ultricies mattis hendrerit. Etiam non tempus nisi, at. Consequat orci, Integer nec fementurm eros. Nulla a rutrum sem.
Lorem ipsum dolor sit amet, consectelur adpiscing elit. maecenas vitae massa at massa malesuada pretiym vel a velit. maeccnas faucibus in nisal noc porta. nam fermrntum ultricies dictum. In ultricies mattis hendrerit. Etiam non tempus nisi, at. Consequat orci, Integer nec fementurm eros. Nulla a rutrum sem.
9:41 AM
100%
Safety Decal
WARNING
750 lbs
340 Kgs
102023285248
WARNING
320

FIG. 3C

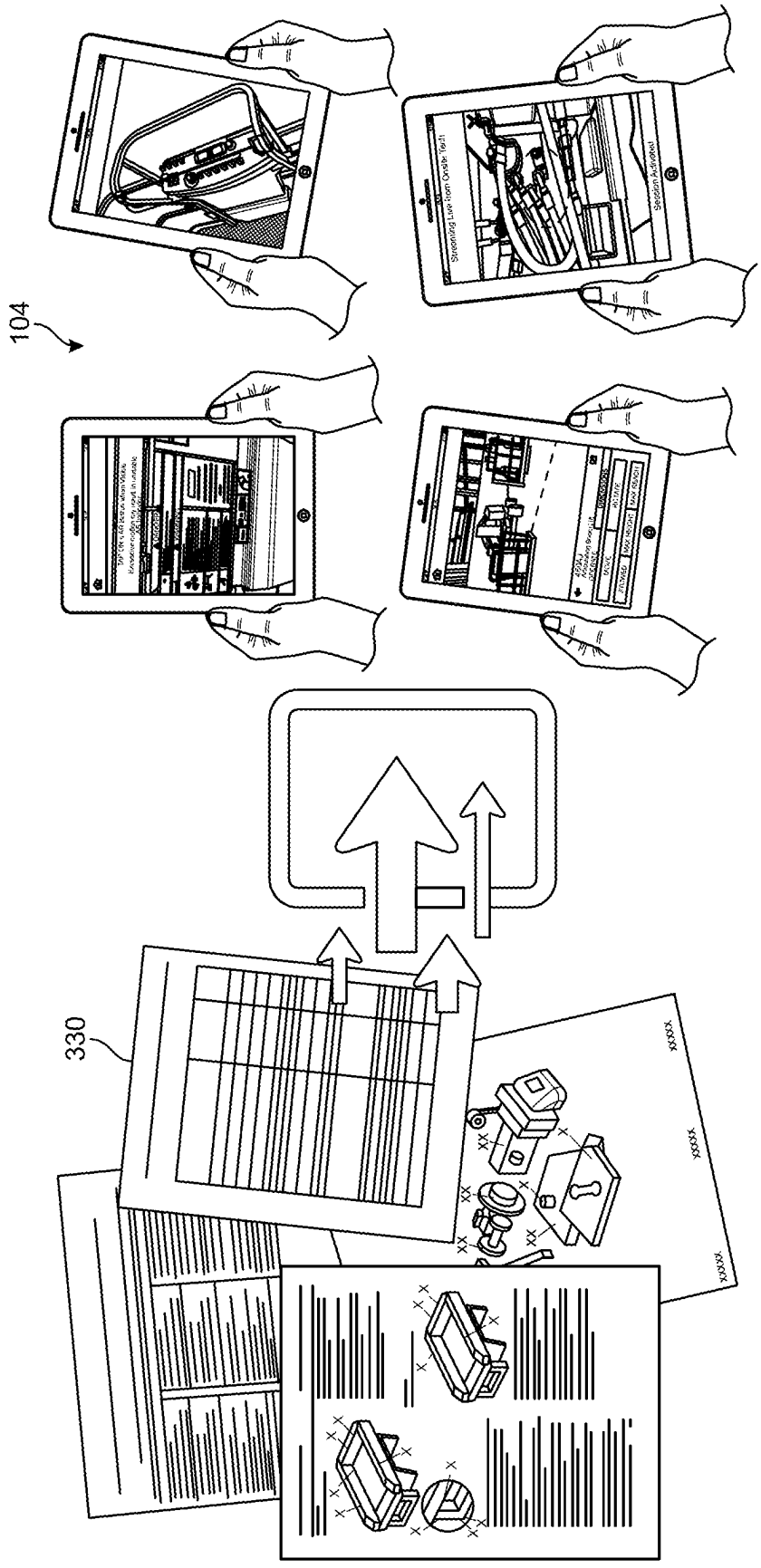


FIG. 3D

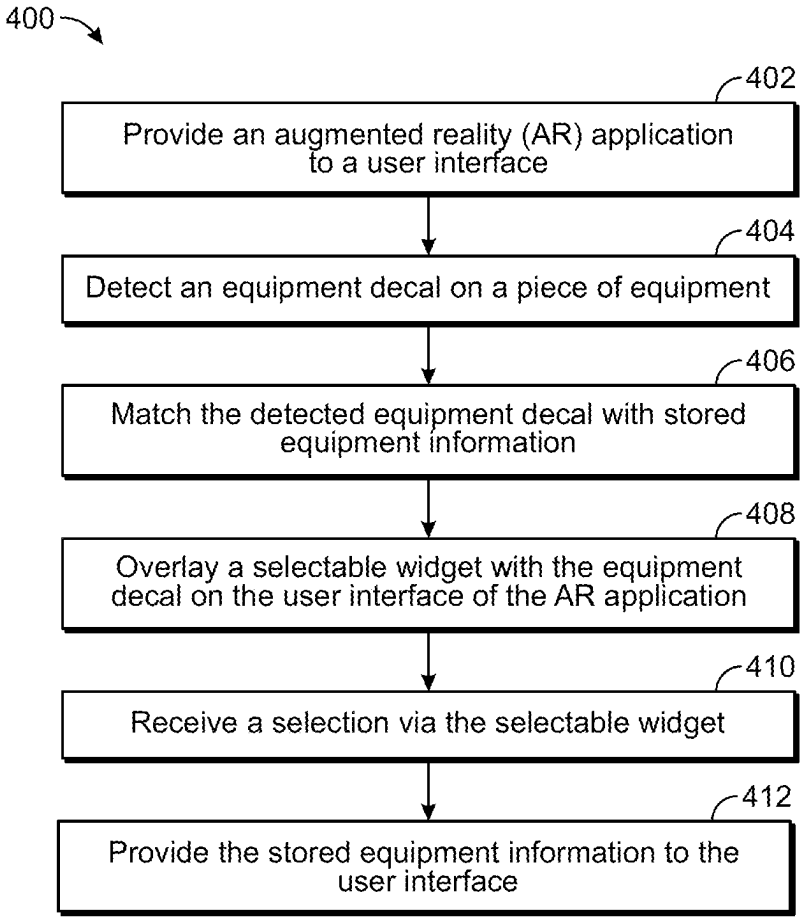
400
402
Provide an augmented reality (AR) application to a user interface
404
Detect an equipment decal on a piece of equipment
406
Match the detected equipment decal with stored equipment information
408
Overlay a selectable widget with the equipment decal on the user interface of the AR application
410
Receive a selection via the selectable widget
412
Provide the stored equipment information to the user interface

FIG. 4

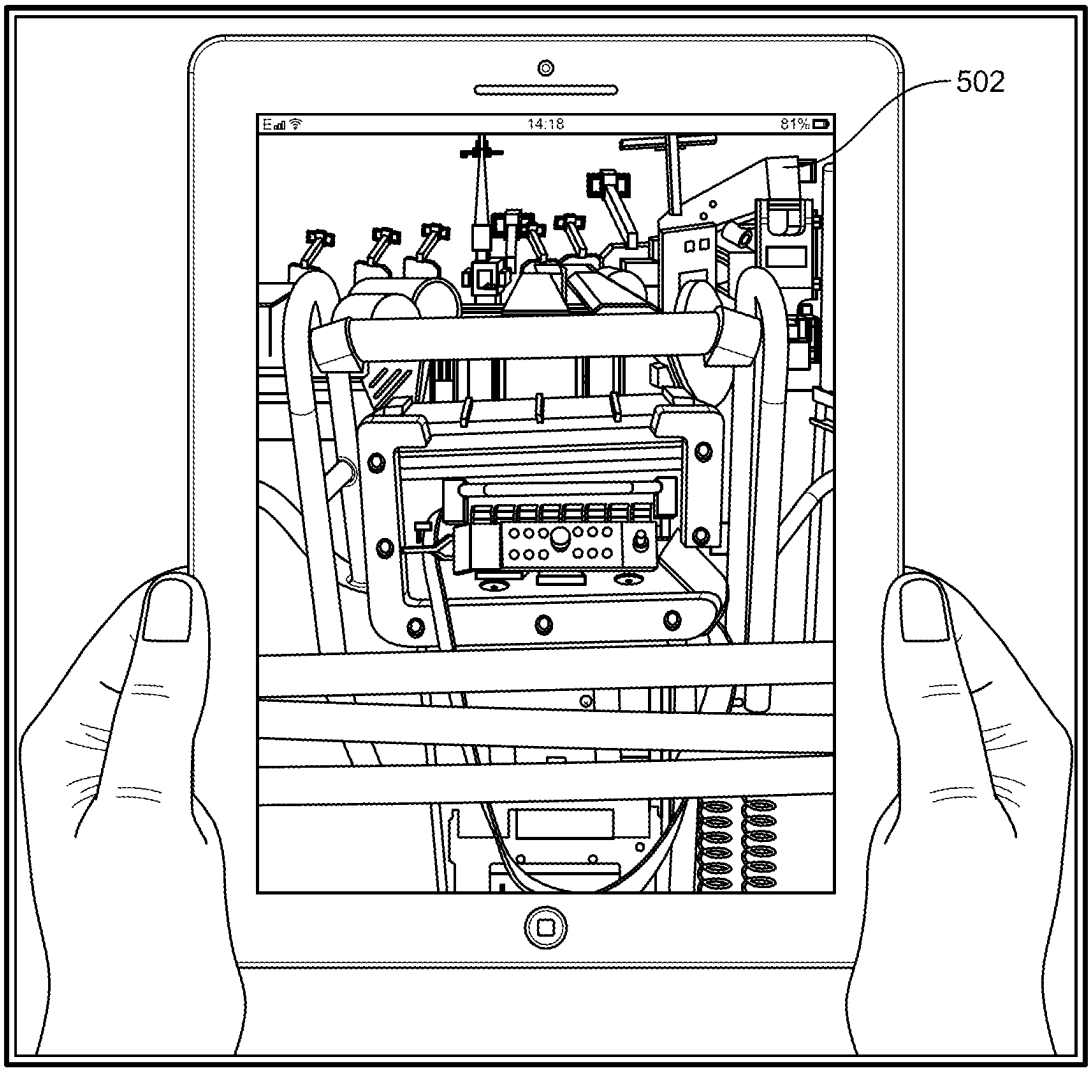


FIG. 5A

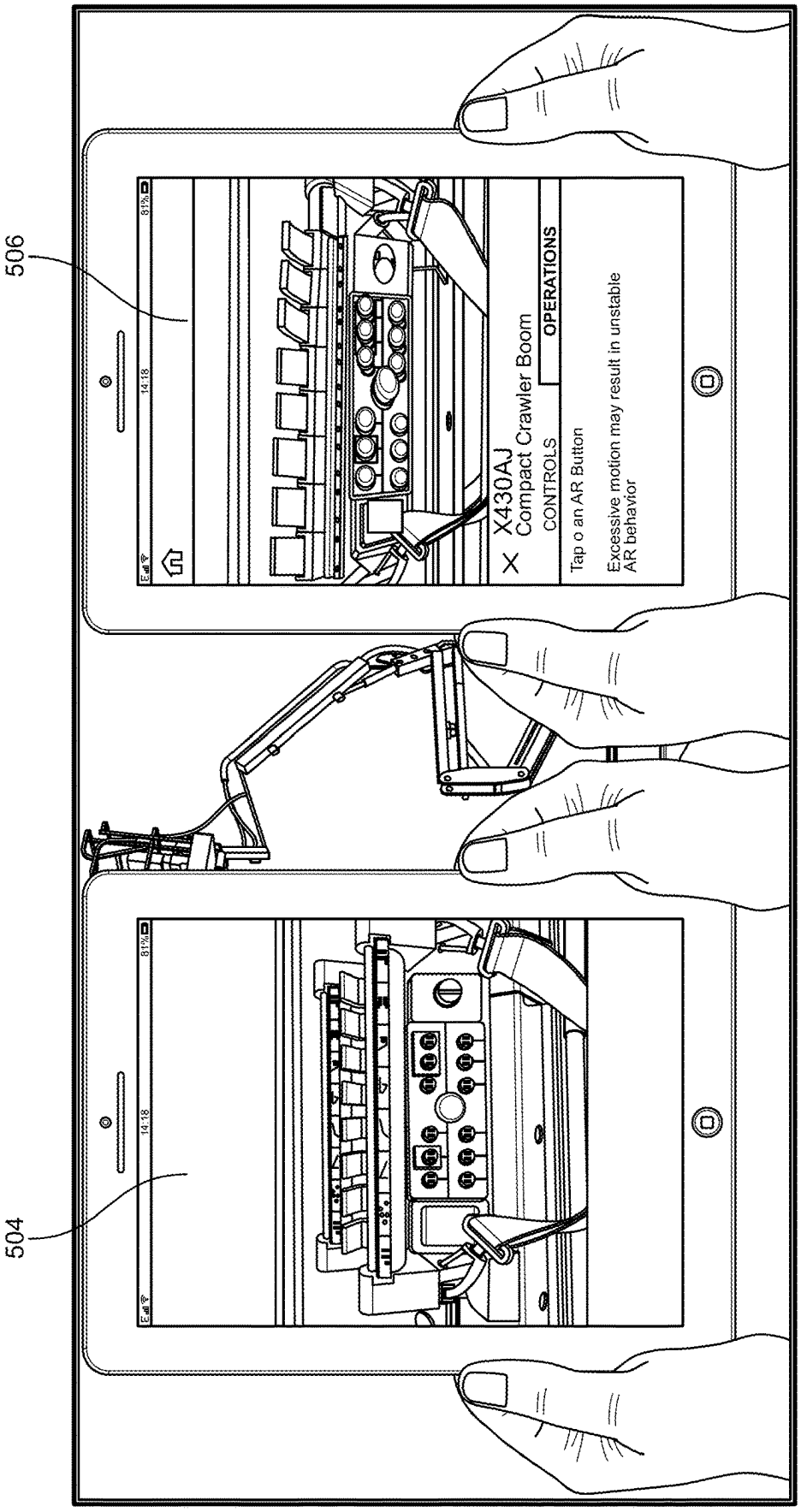
506
504
X430AJ
Compact Crawler Boom
CONTROLS
OPERATIONS
Tap o an AR Button
Excessive motion may result in unstable AR behavior

FIG. 5B

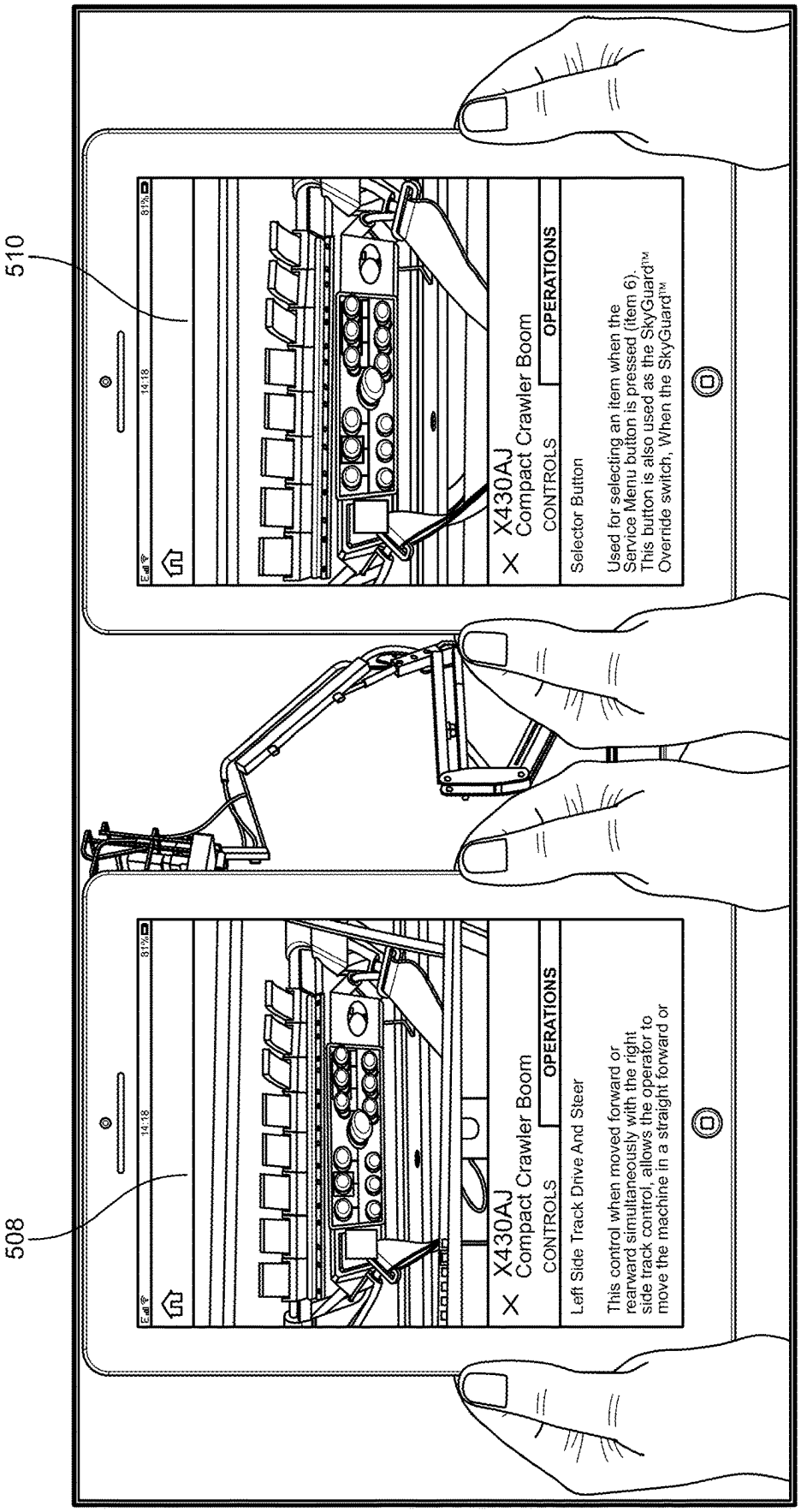
510
508
X430AJ
Compact Crawler Boom
CONTROLS
OPERATIONS
Left Side Track Drive And Steer
This control when moved forward or rearward simultaneously with the right side track control, allows the operator to move the machine in a straight forward or
X430AJ
Compact Crawler Boom
CONTROLS
OPERATIONS
Selector Button
Used for selecting an item when the Service Menu button is pressed (item 6). This button is also used as the SkyGuard™ Override switch, When the SkyGuard™

FIG. 5C

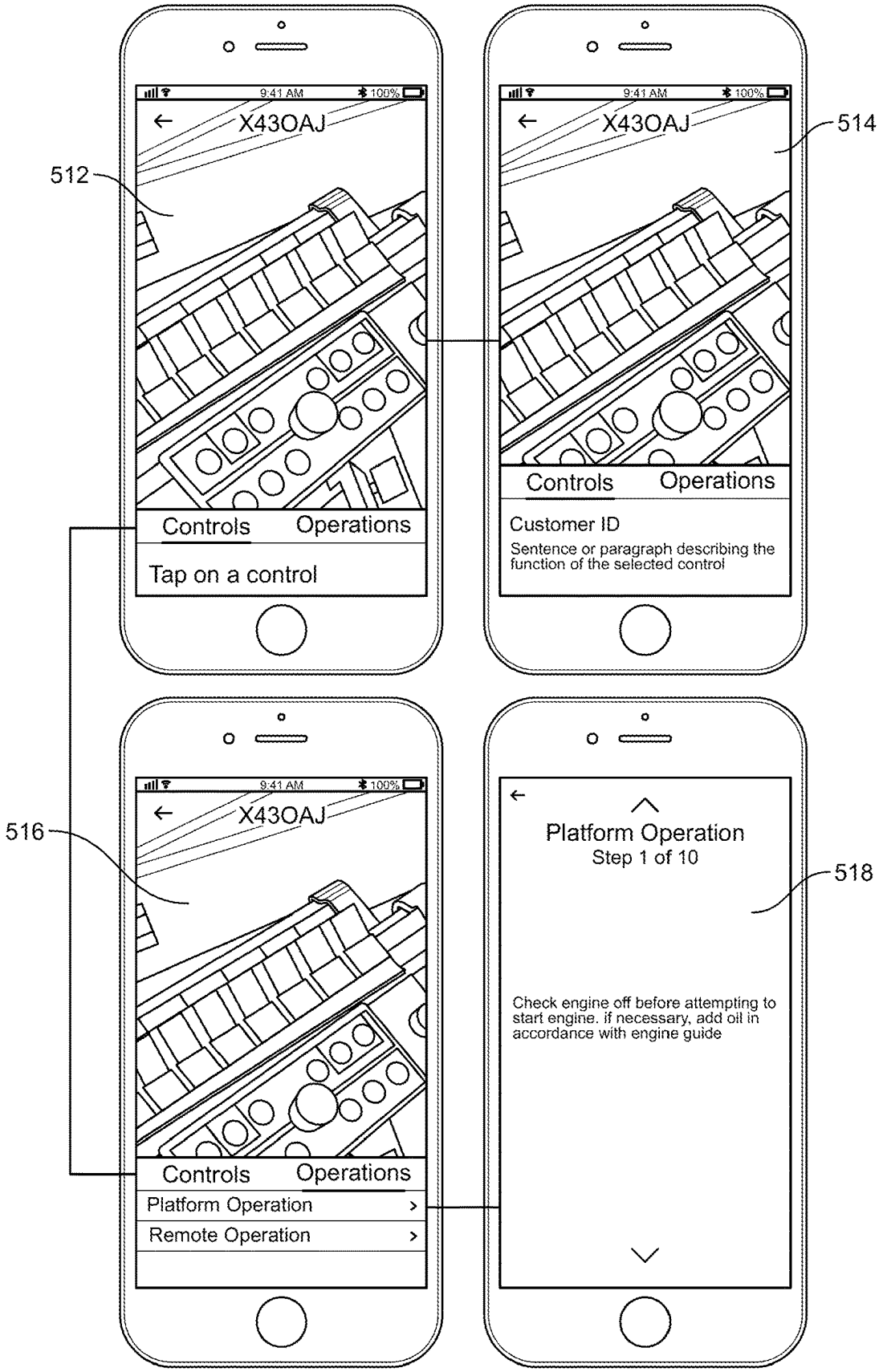
9:41 AM
100%
X43OAJ
512
Controls
Operations
Tap on a control
514
Customer ID
Sentence or paragraph describing the function of the selected control
516
Platform Operation
Remote Operation
518
Platform Operation
Step 1 of 10
Check engine off before attempting to start engine. if necessary, add oil in accordance with engine guide

FIG. 5D

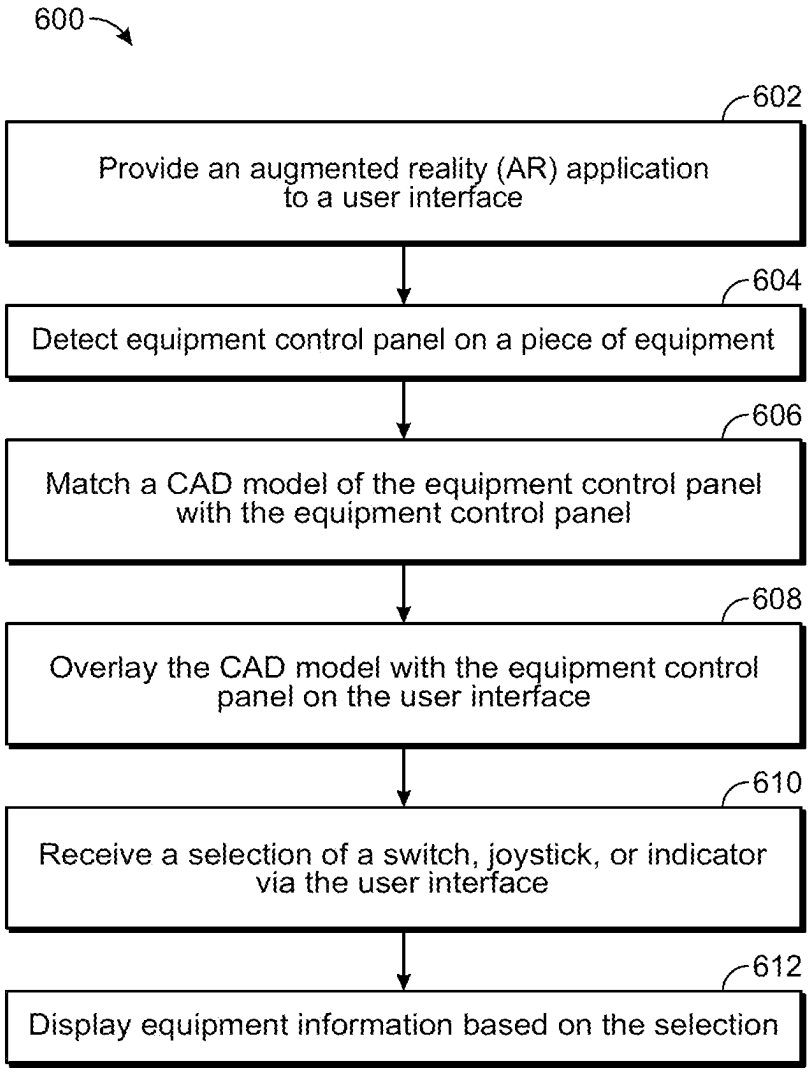
600
602
Provide an augmented reality (AR) application to a user interface
604
Detect equipment control panel on a piece of equipment
606
Match a CAD model of the equipment control panel with the equipment control panel
608
Overlay the CAD model with the equipment control panel on the user interface
610
Receive a selection of a switch, joystick, or indicator via the user interface
612
Display equipment information based on the selection

FIG. 6

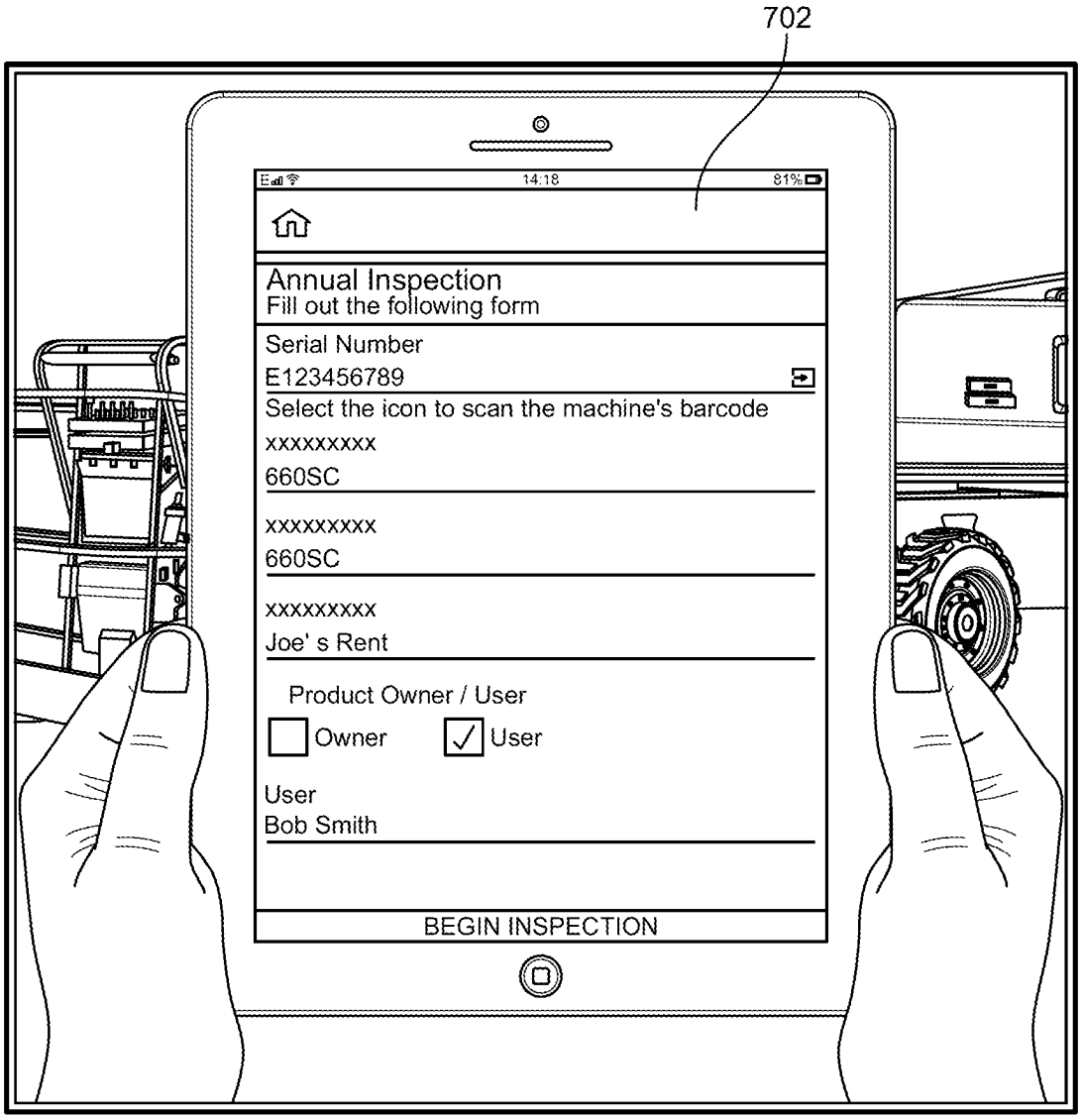
702
14:18
81%
Annual Inspection
Fill out the following form
Serial Number
E123456789
Select the icon to scan the machine's barcode
xxxxxxxxx
660SC
xxxxxxxxx
660SC
xxxxxxxxx
Joe' s Rent
Product Owner / User
Owner
User
User
Bob Smith
BEGIN INSPECTION

FIG. 7A

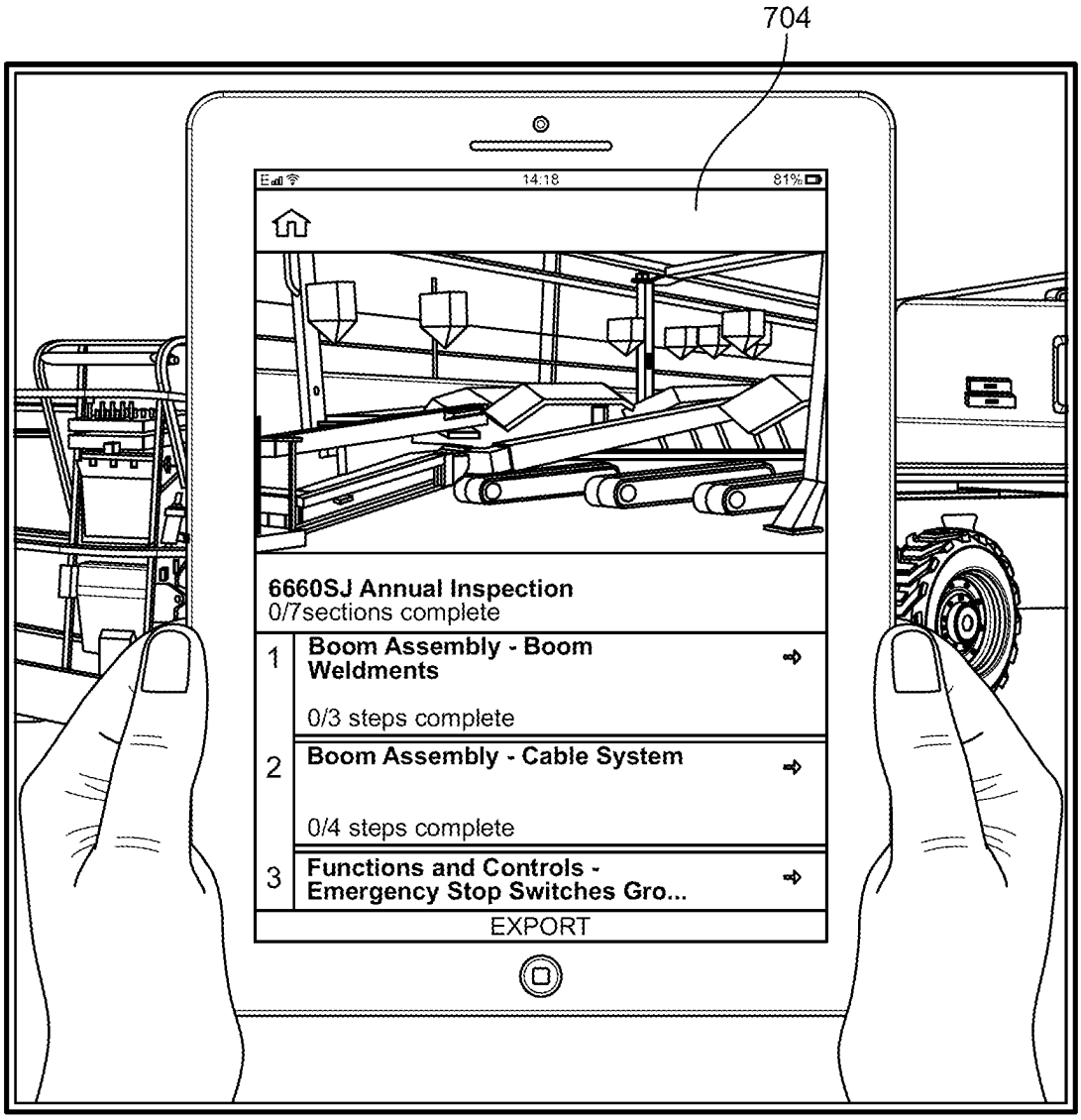
704
14:18
81%
6660SJ Annual Inspection
0/7sections complete
1
Boom Assembly - Boom Weldments
0/3 steps complete
2
Boom Assembly - Cable System
0/4 steps complete
3
Functions and Controls - Emergency Stop Switches Gro...
EXPORT

FIG. 7B

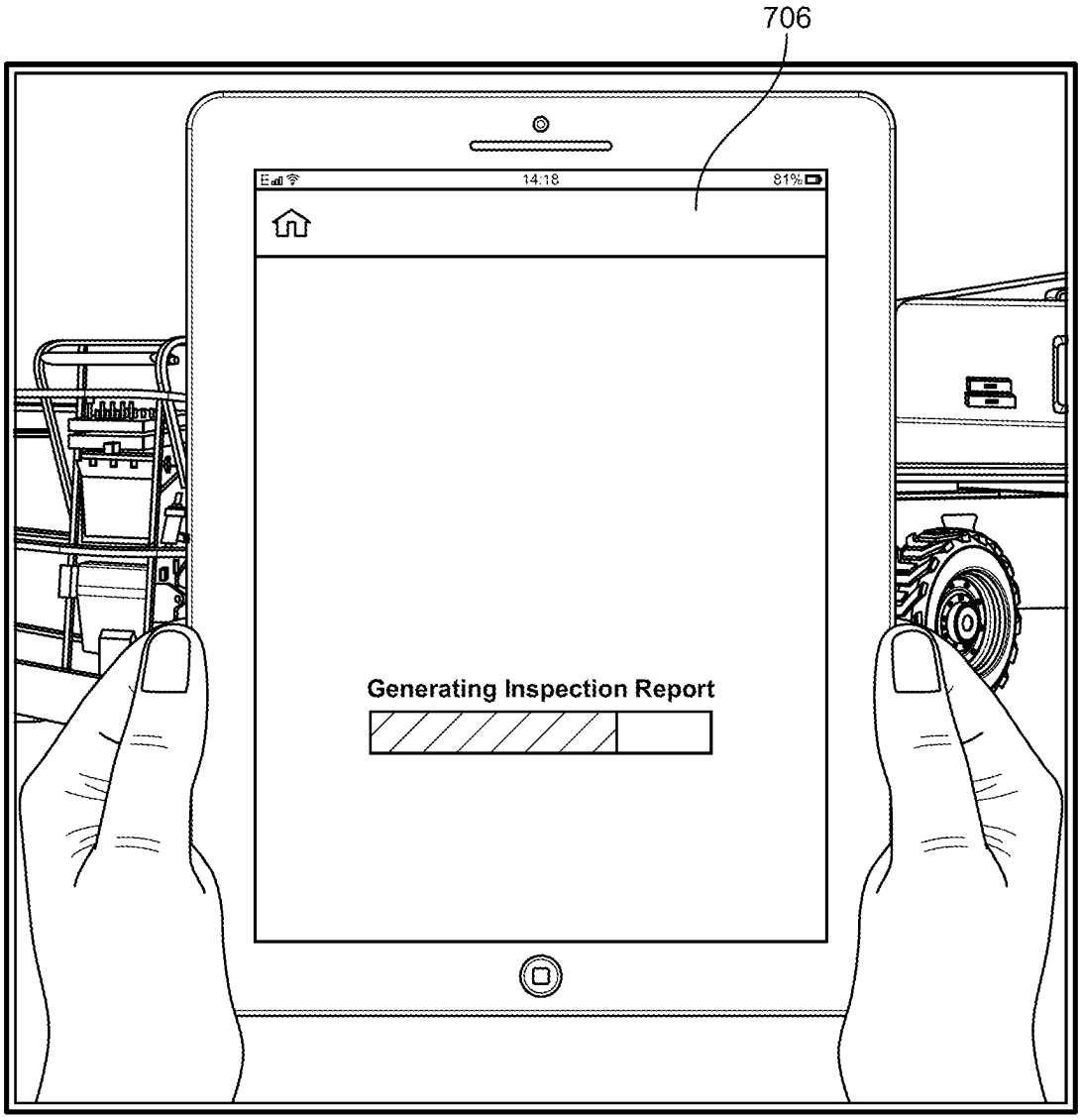


FIG. 7C

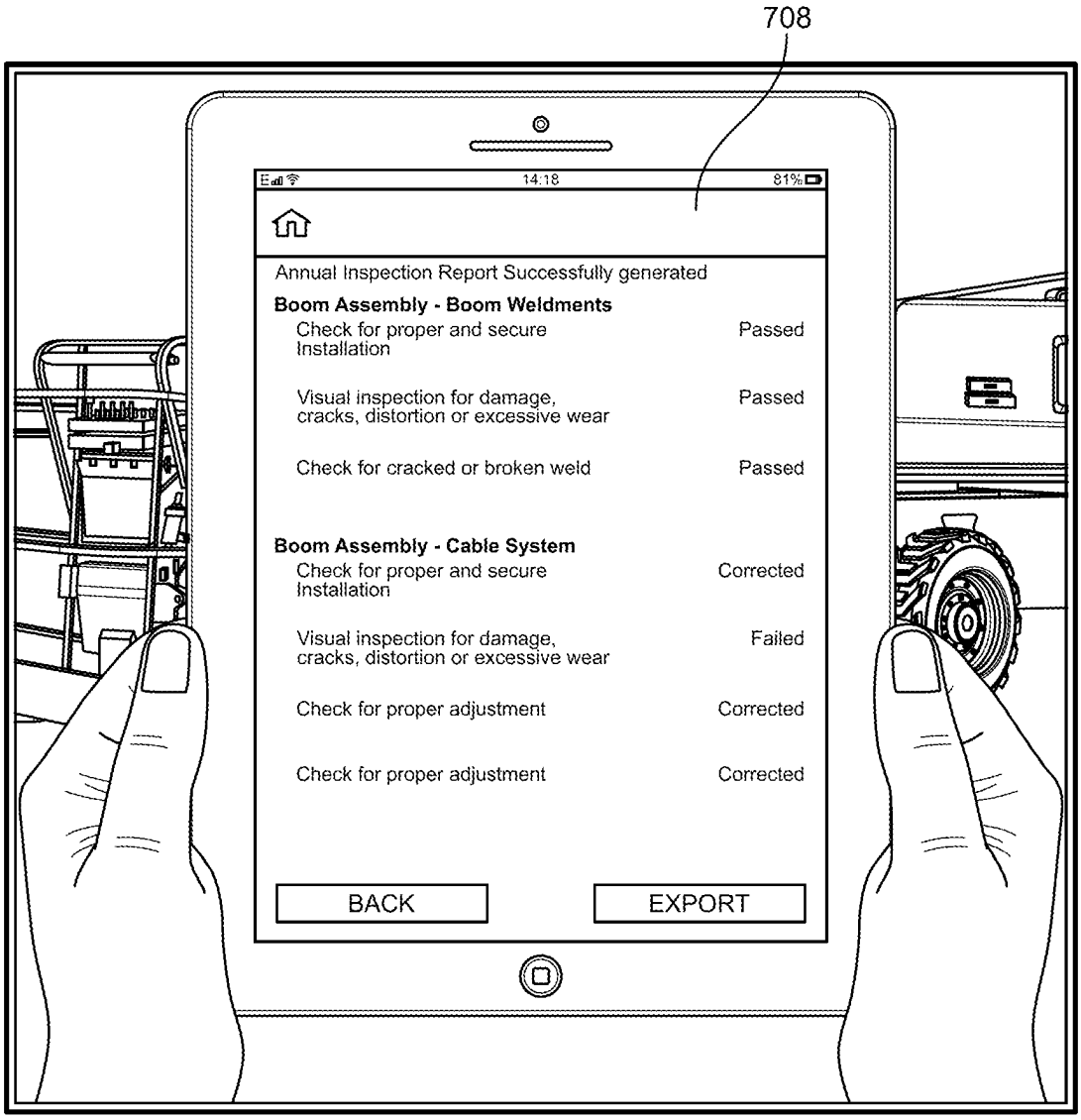
708
14:18
81%
Annual Inspection Report Successfully generated
Boom Assembly - Boom Weldments
Check for proper and secure Installation
Passed
Visual inspection for damage, cracks, distortion or excessive wear
Passed
Check for cracked or broken weld
Passed
Boom Assembly - Cable System
Check for proper and secure Installation
Corrected
Visual inspection for damage, cracks, distortion or excessive wear
Failed
Check for proper adjustment
Corrected
Check for proper adjustment
Corrected
BACK
EXPORT

FIG. 7D

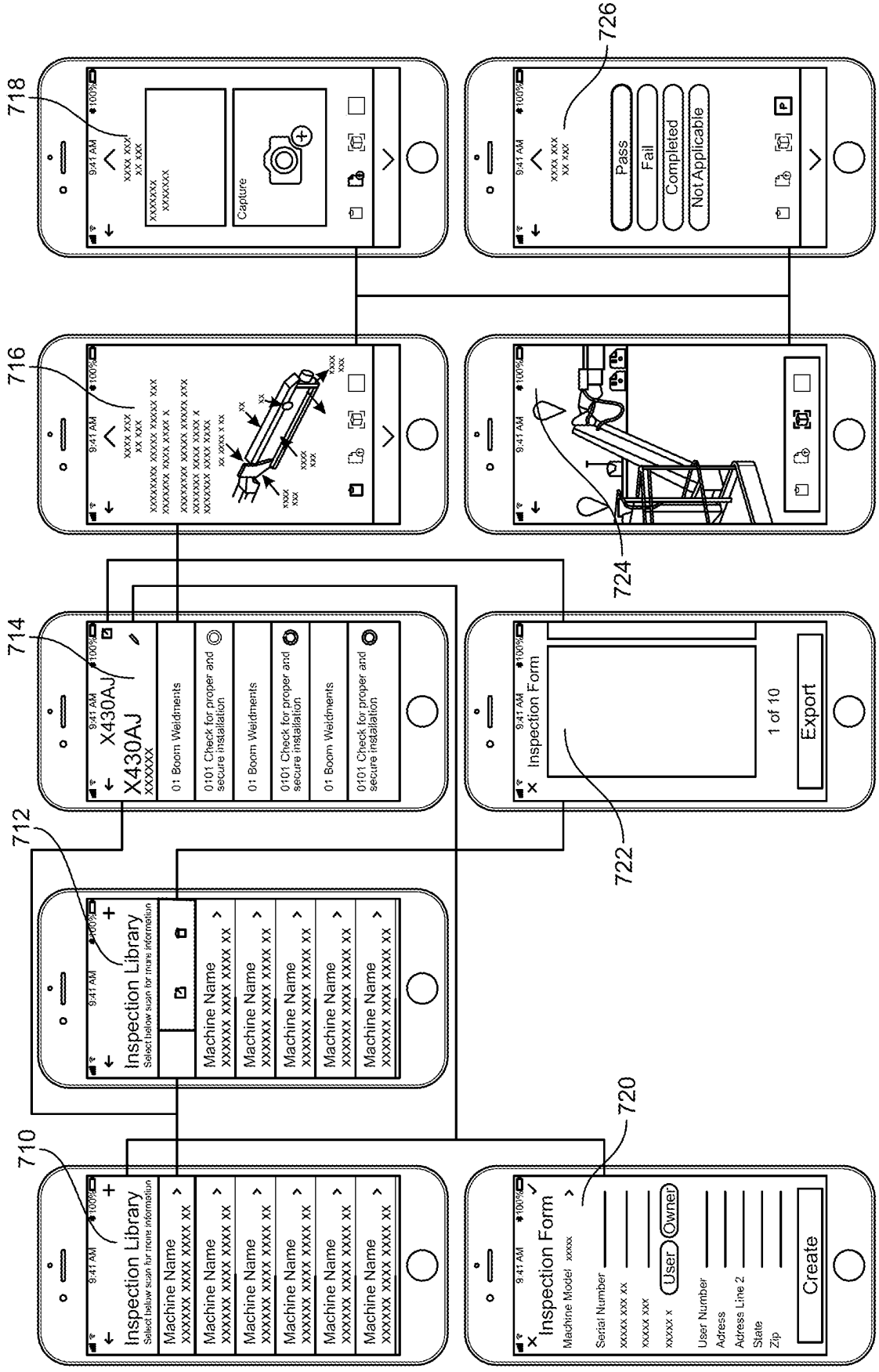
710
712
714
716
718
720
722
724
726
Inspection Library
Select below scan for more information
Machine Name
Inspection Form
Machine Model xxxxx
Serial Number
User
Owner
User Number
Adress
Adress Line 2
State
Zip
Create
X430AJ
01 Boom Weldments
0101 Check for proper and secure installation
Capture
Inspection Form
1 of 10
Export
Pass
Fail
Completed
Not Applicable

FIG. 7E

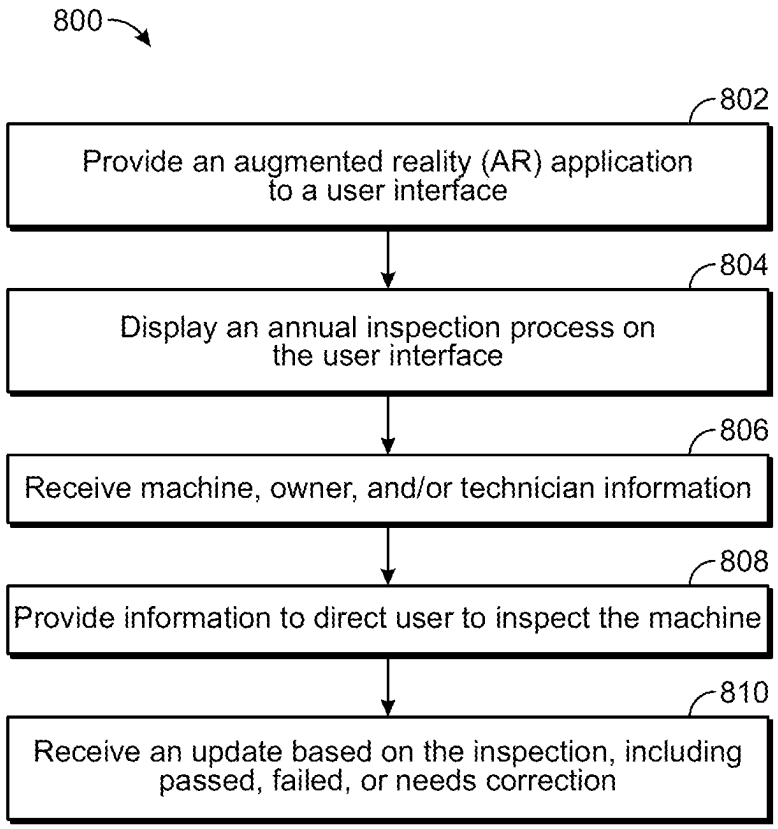
800
802
Provide an augmented reality (AR) application to a user interface
804
Display an annual inspection process on the user interface
806
Receive machine, owner, and/or technician information
808
Provide information to direct user to inspect the machine
810
Receive an update based on the inspection, including passed, failed, or needs correction

FIG. 8

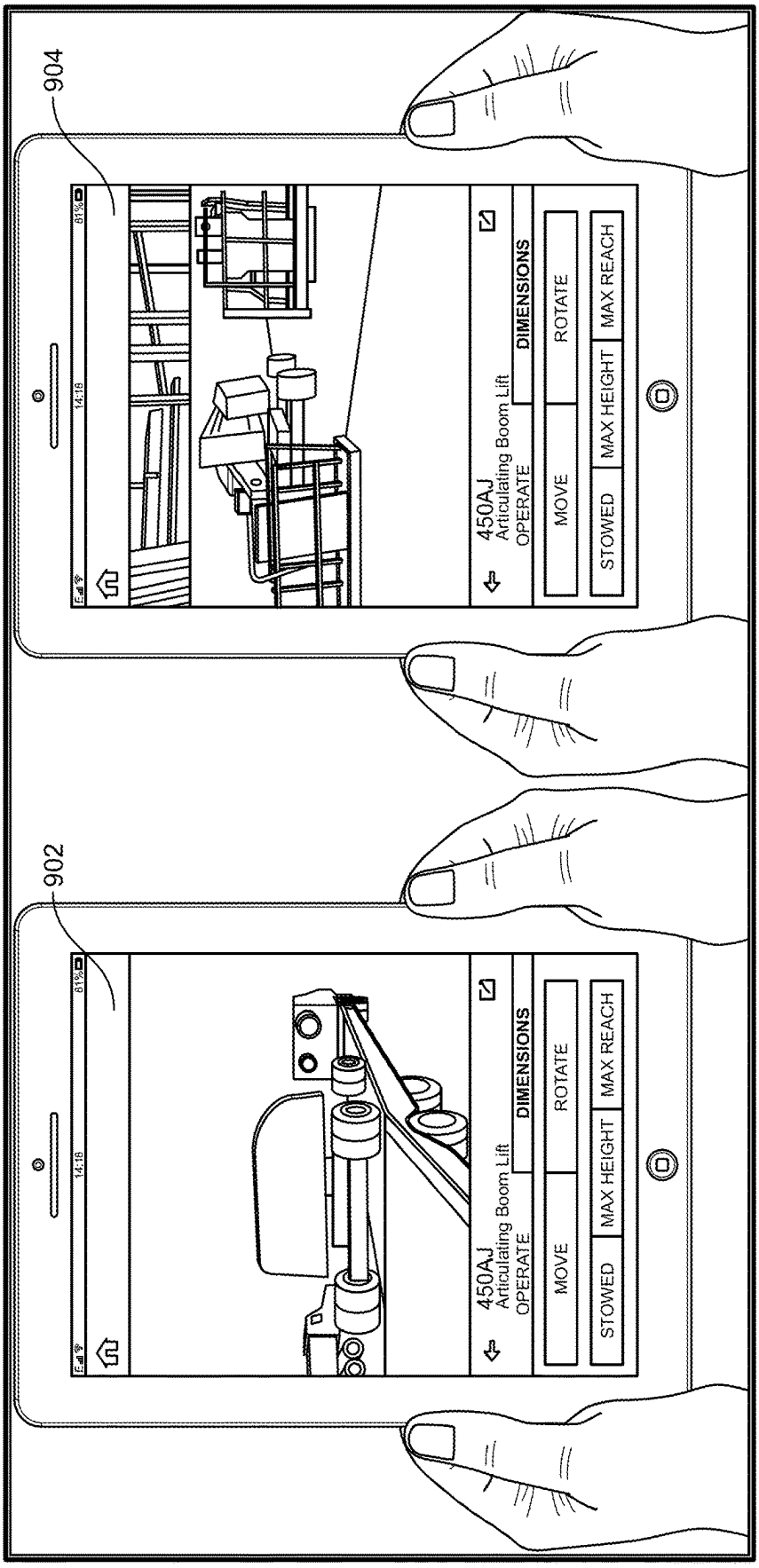
904
902
14:18
81%
450AJ
Articulating Boom Lift
OPERATE
DIMENSIONS
MOVE
ROTATE
STOWED
MAX HEIGHT
MAX REACH

FIG. 9A

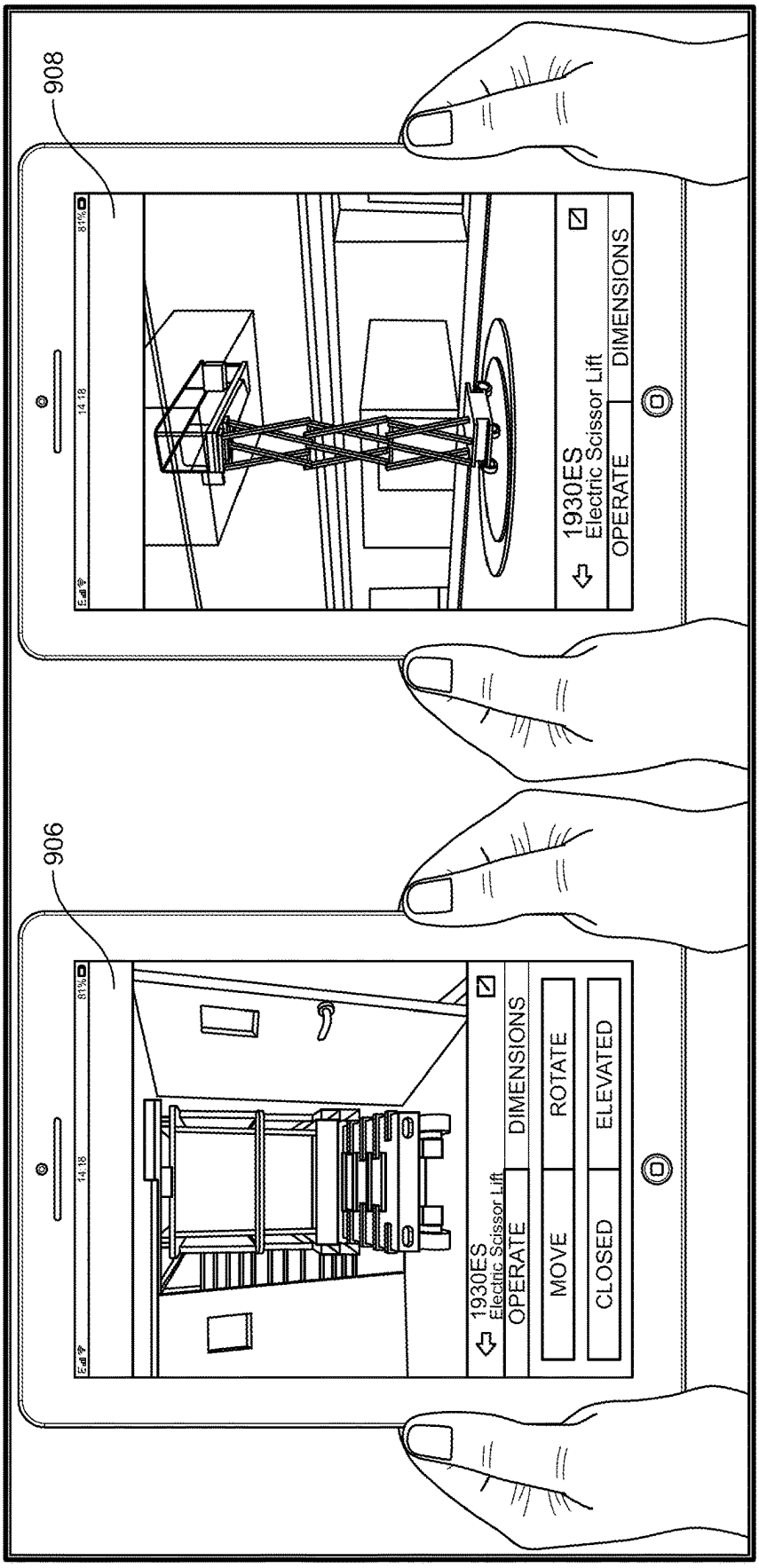
908
906
1930ES
Electric Scissor Lift
OPERATE
DIMENSIONS
MOVE
ROTATE
CLOSED
ELEVATED

FIG. 9B

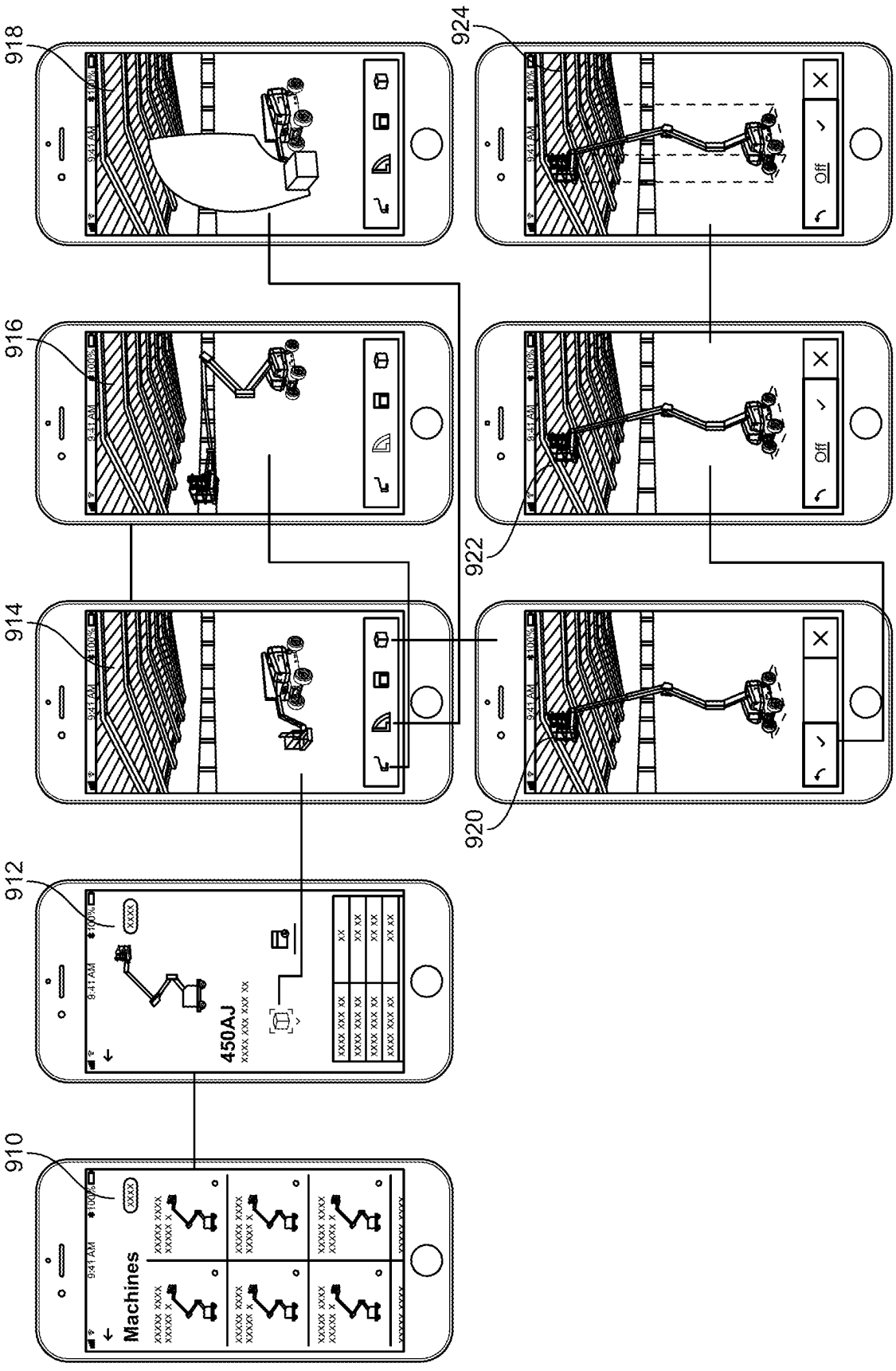


FIG. 9C

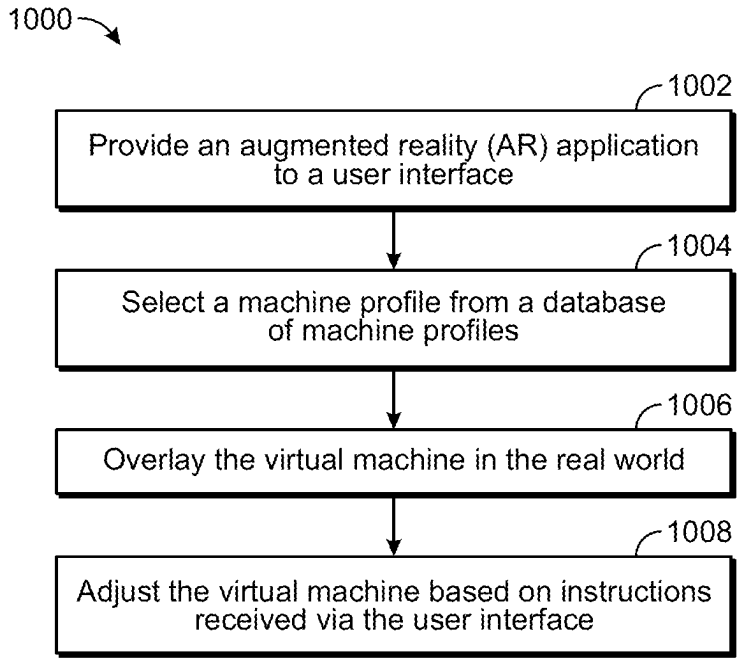
1000
1002
Provide an augmented reality (AR) application to a user interface
1004
Select a machine profile from a database of machine profiles
1006
Overlay the virtual machine in the real world
1008
Adjust the virtual machine based on instructions received via the user interface

FIG. 10

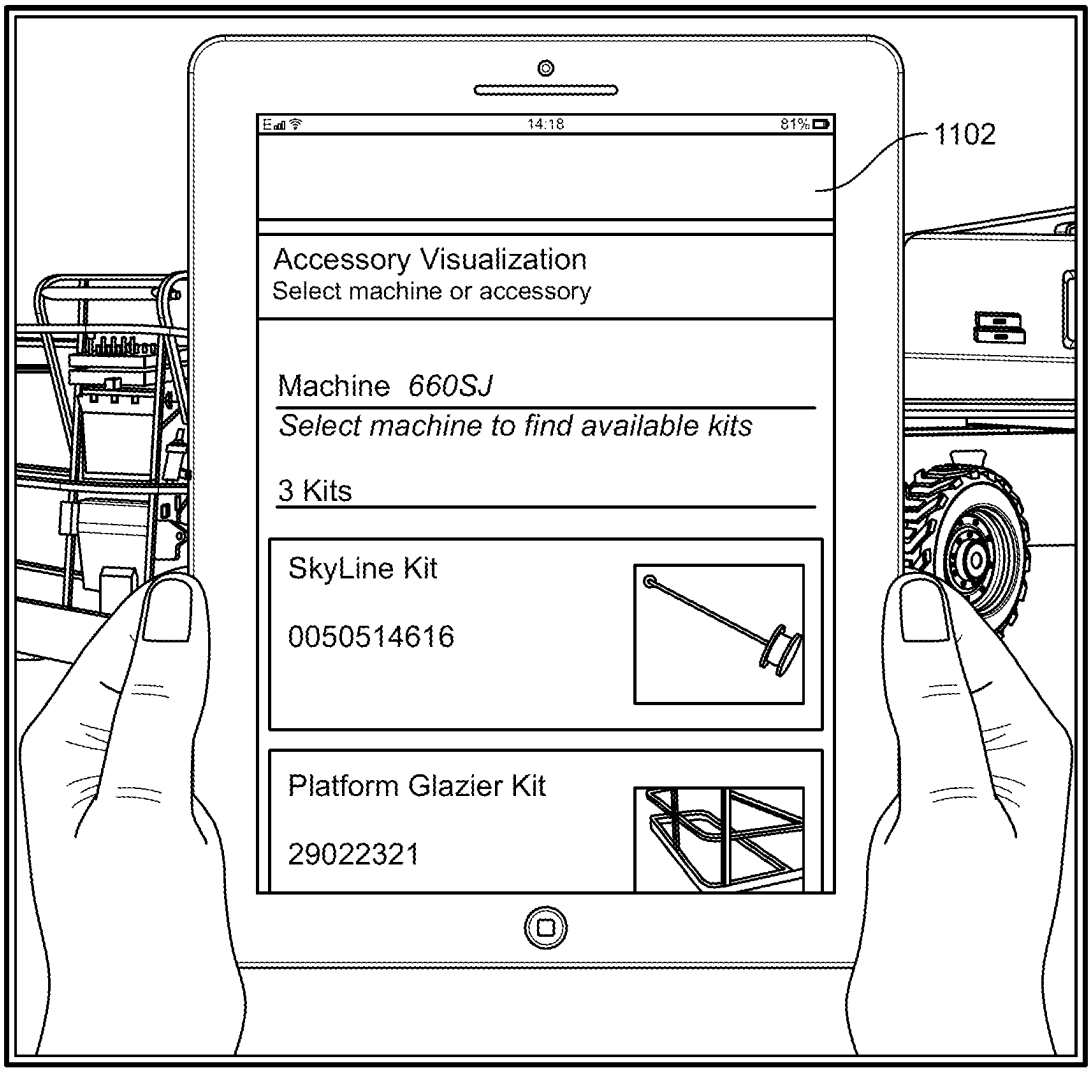
14:18
81%
1102
Accessory Visualization
Select machine or accessory
Machine 660SJ
Select machine to find available kits
3 Kits
SkyLine Kit
0050514616
Platform Glazier Kit
29022321

FIG. 11A

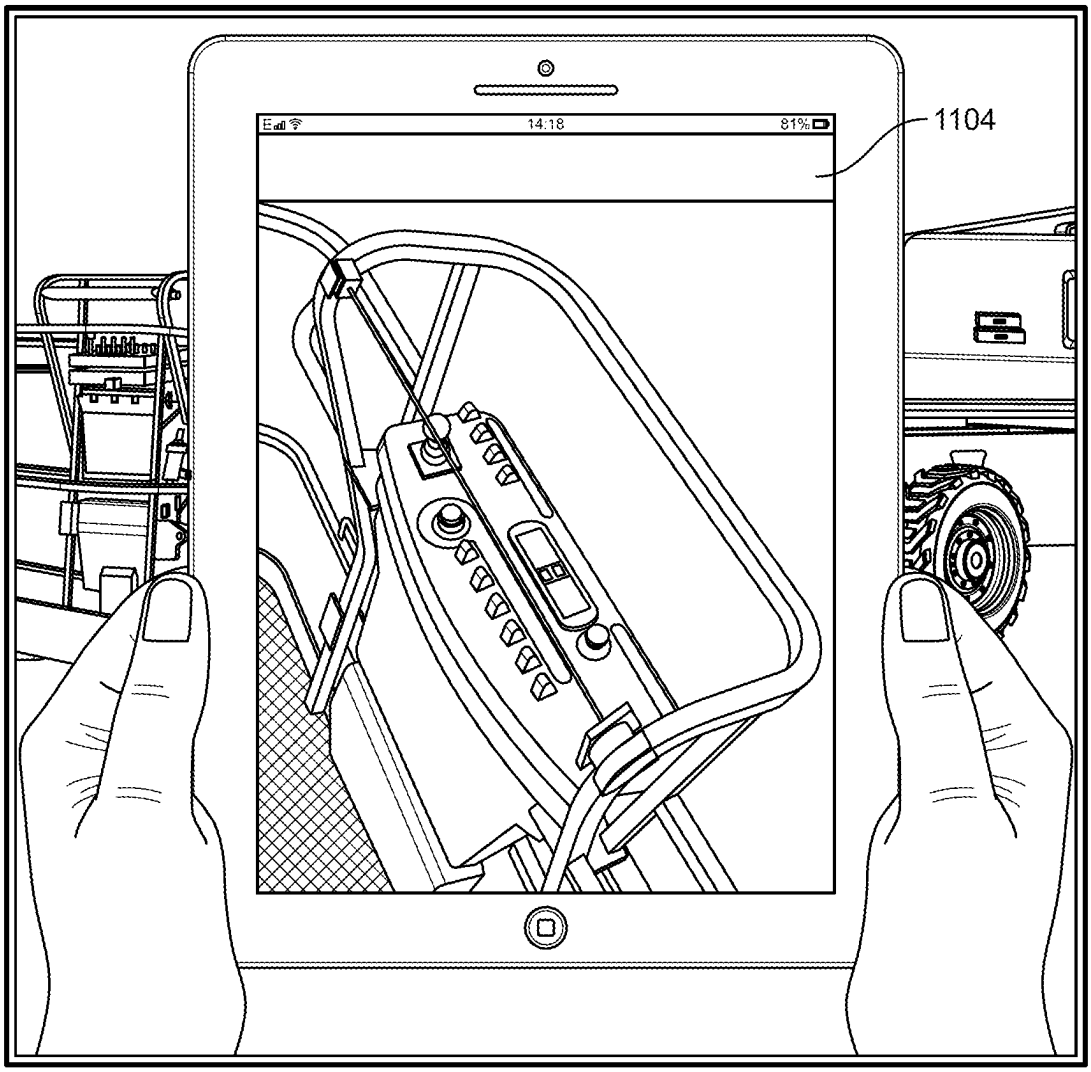


FIG. 11B

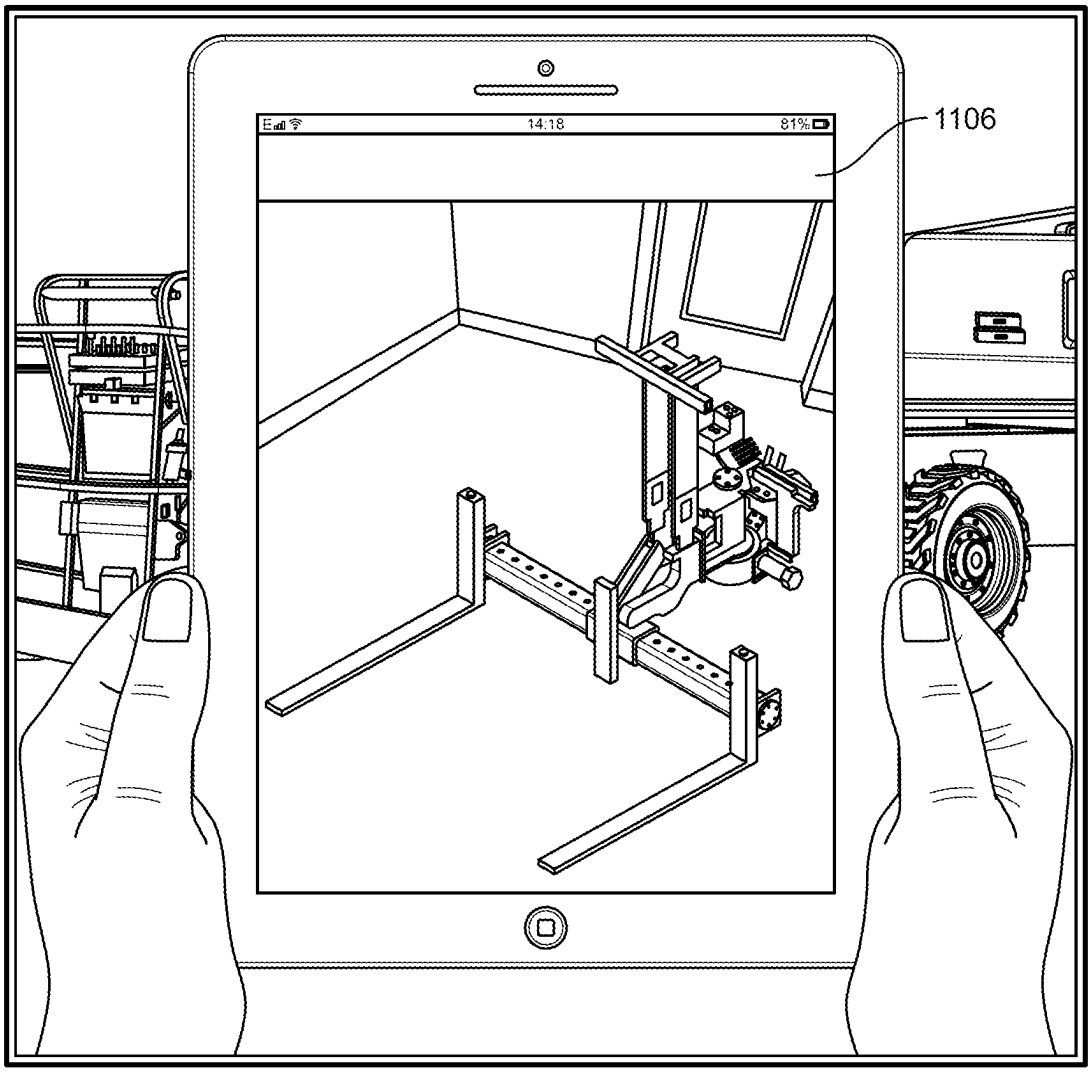


FIG. 11C

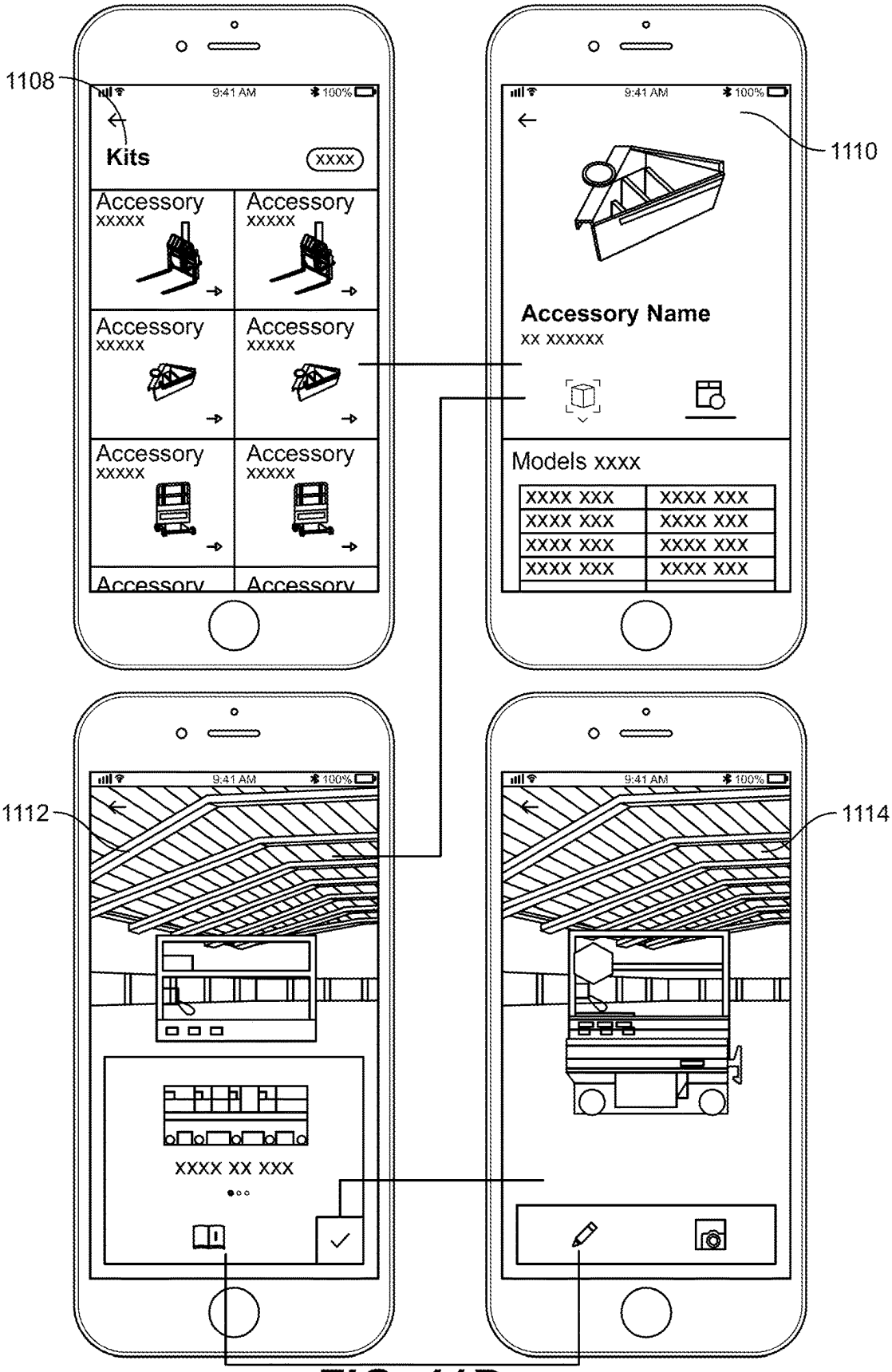
1108
9:41 AM
100%
Kits
xxxx
Accessory
xxxxx
Accessory
xxxxx
Accessory
xxxxx
Accessory
xxxxx
Accessory
xxxxx
Accessory
xxxxx
Accessory
Accessory
1110
9:41 AM
100%
Accessory Name
xx xxxxxx
Models xxxx
xxxx xxx
xxxx xxx
xxxx xxx
xxxx xxx
xxxx xxx
xxxx xxx
xxxx xxx
xxxx xxx
1112
9:41 AM
100%
xxxx xx xxx
1114
9:41 AM
100%

FIG. 11D

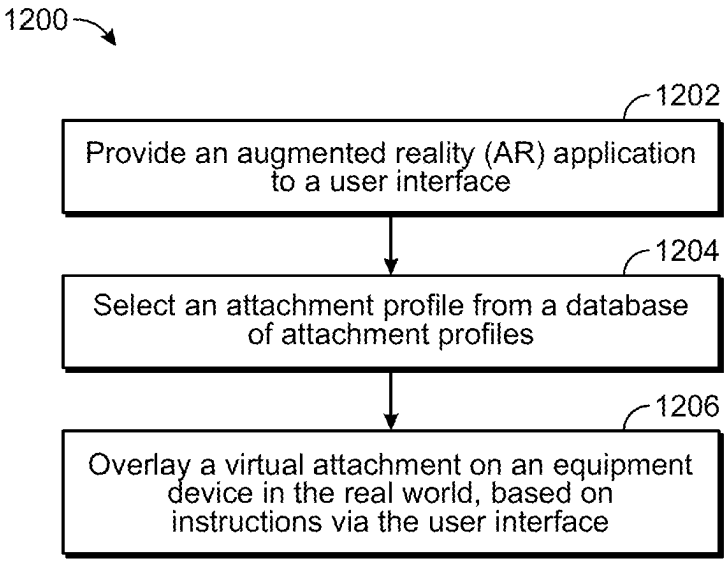
1200
1202
Provide an augmented reality (AR) application to a user interface
1204
Select an attachment profile from a database of attachment profiles
1206
Overlay a virtual attachment on an equipment device in the real world, based on instructions via the user interface

FIG. 12

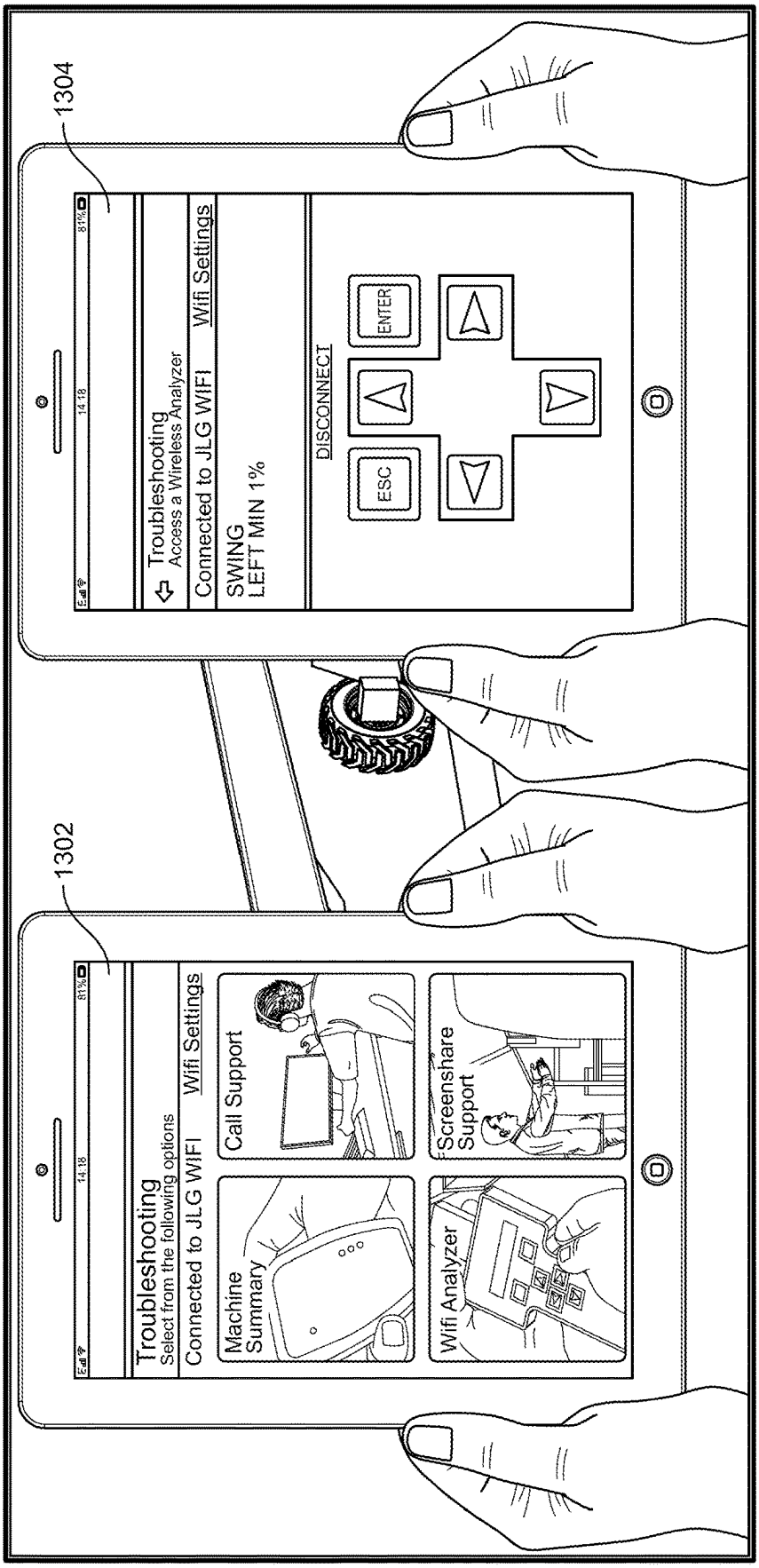
1302
1304
Troubleshooting
Select from the following options
Connected to JLG WIFI
Wifi Settings
Machine Summary
Call Support
Wifi Analyzer
Screenshare Support
Troubleshooting
Access a Wireless Analyzer
Connected to JLG WIFI
Wifi Settings
SWING
LEFT MIN 1%
DISCONNECT
ESC
ENTER

FIG. 13A

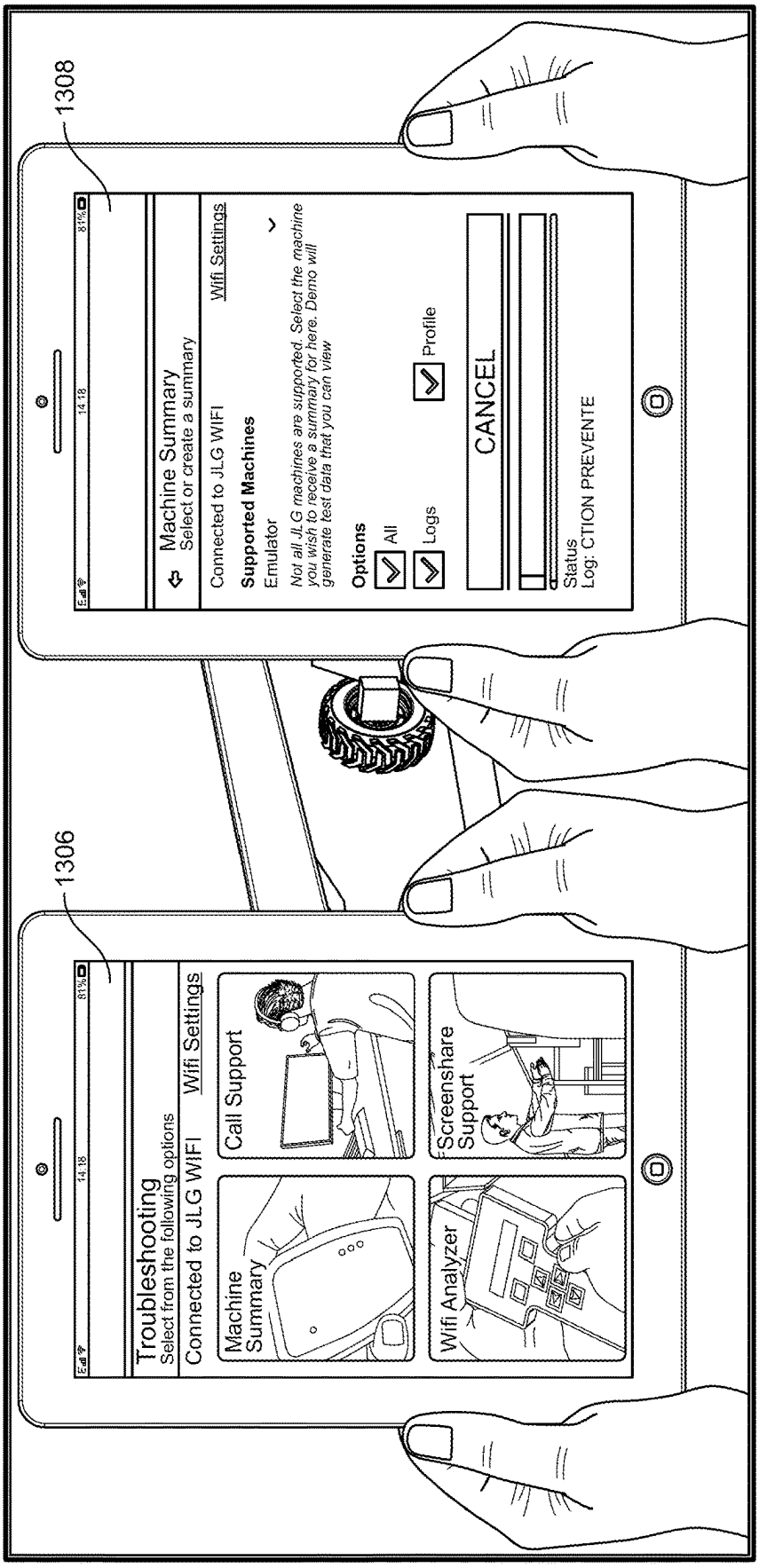
1306
Troubleshooting
Select from the following options
Connected to JLG WIFI
Wifi Settings
Machine Summary
Call Support
Wifi Analyzer
Screenshare Support
1308
Machine Summary
Select or create a summary
Connected to JLG WIFI
Wifi Settings
Supported Machines
Emulator
Not all JLG machines are supported. Select the machine you wish to receive a summary for here. Demo will generate test data that you can view
Options
All
Logs
Profile
CANCEL
Status
Log: CTION PREVENTE

FIG. 13B

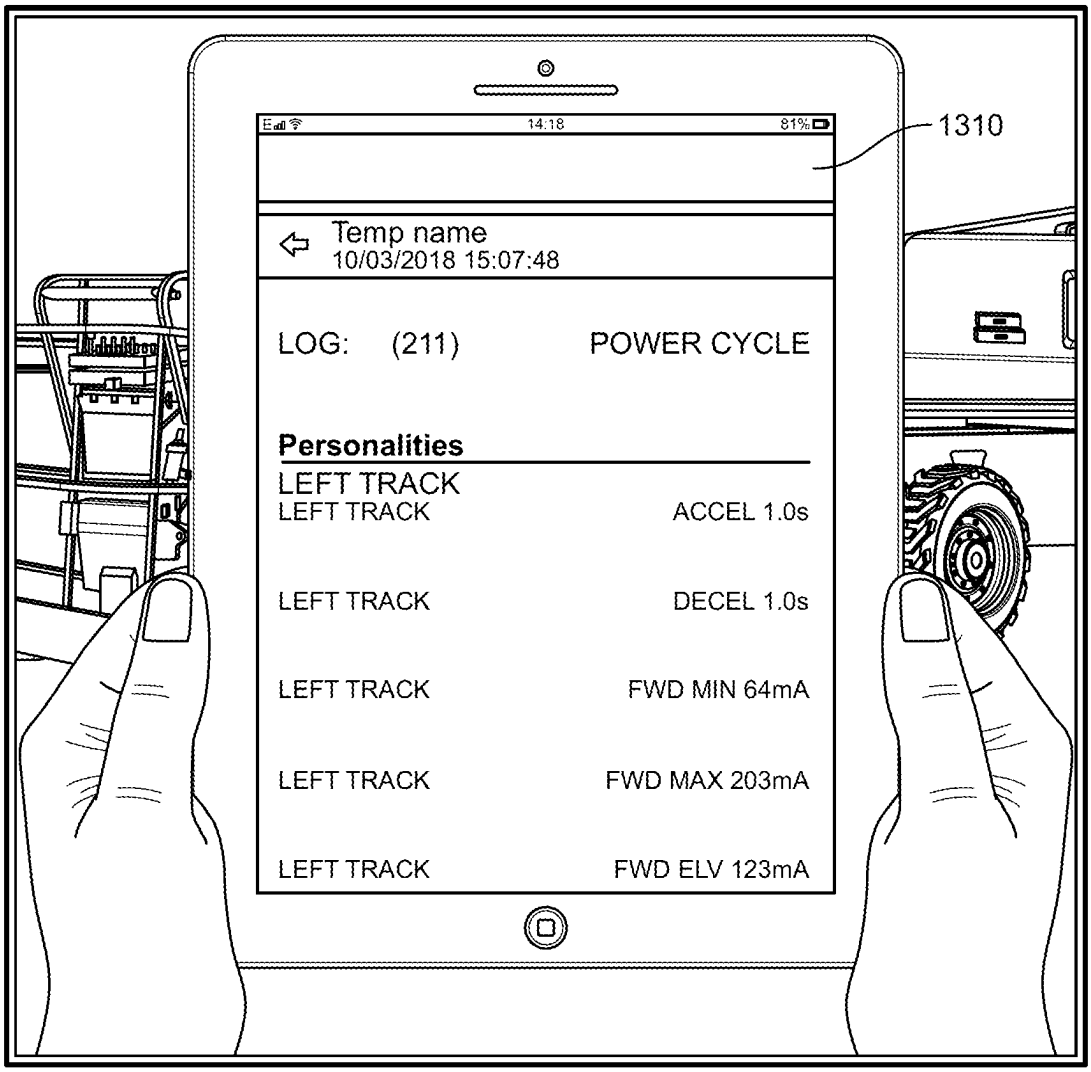
14:18
81%
1310
Temp name
10/03/2018 15:07:48
LOG: (211) POWER CYCLE
Personalities
LEFT TRACK
LEFT TRACK ACCEL 1.0s
LEFT TRACK DECEL 1.0s
LEFT TRACK FWD MIN 64mA
LEFT TRACK FWD MAX 203mA
LEFT TRACK FWD ELV 123mA

FIG. 13C

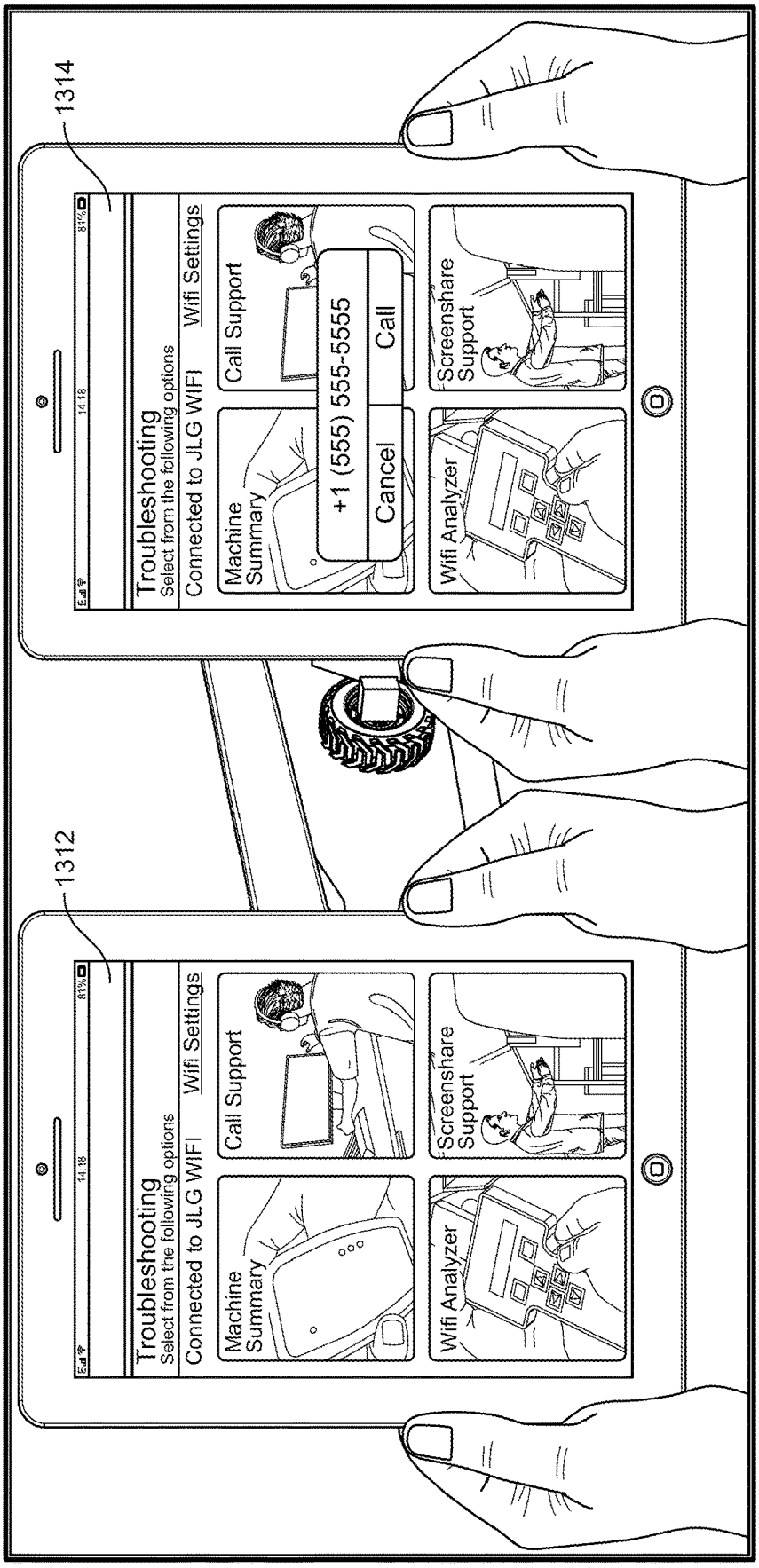
1312
1314
Troubleshooting
Select from the following options
Connected to JLG WIFI
Wifi Settings
Machine Summary
Call Support
Wifi Analyzer
Screenshare Support
+1 (555) 555-5555
Cancel
Call

FIG. 13D

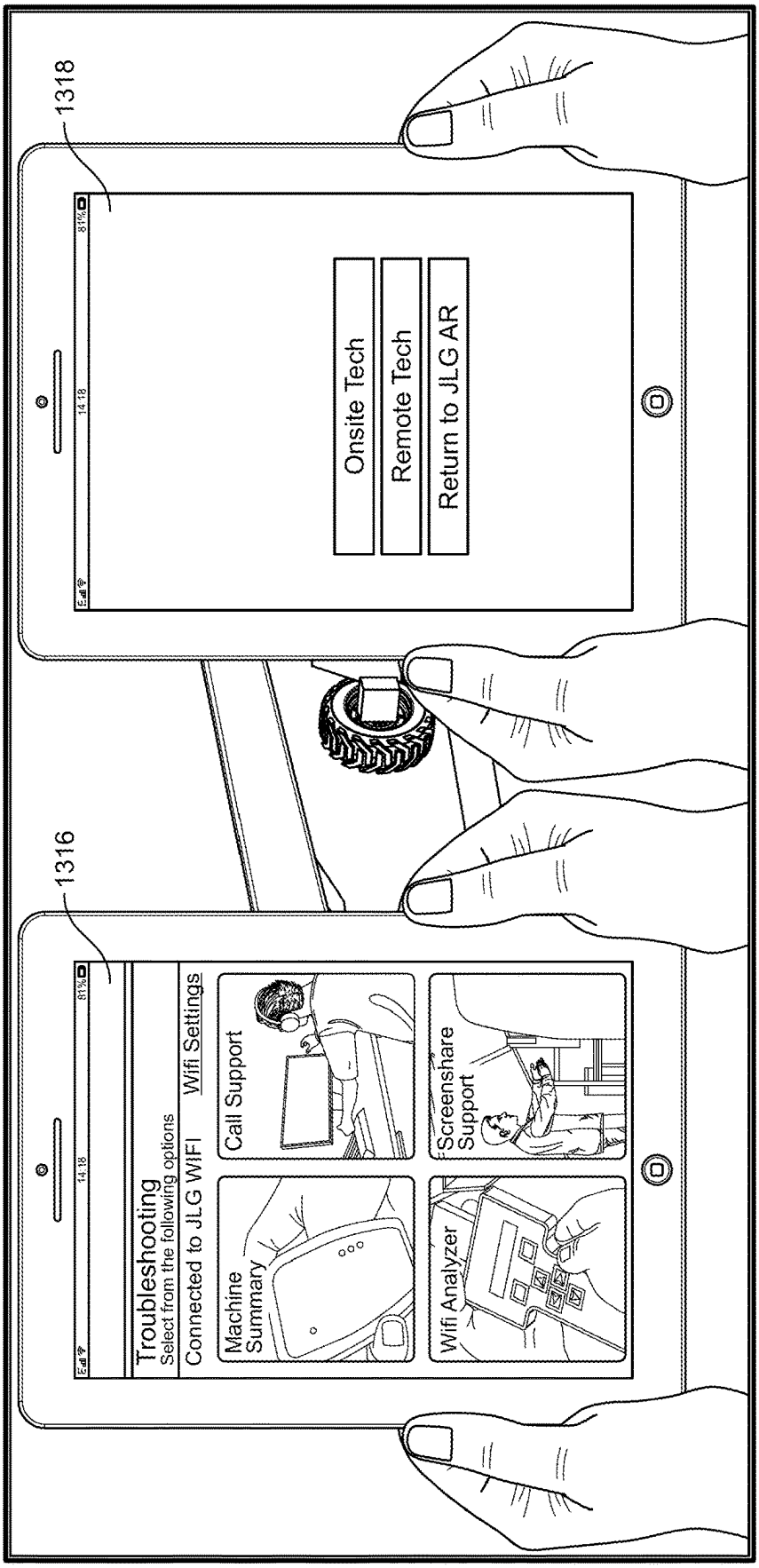
1316
Troubleshooting
Select from the following options
Connected to JLG WIFI
Wifi Settings
Machine Summary
Call Support
Wifi Analyzer
Screenshare Support
1318
Onsite Tech
Remote Tech
Return to JLG AR

FIG. 13E

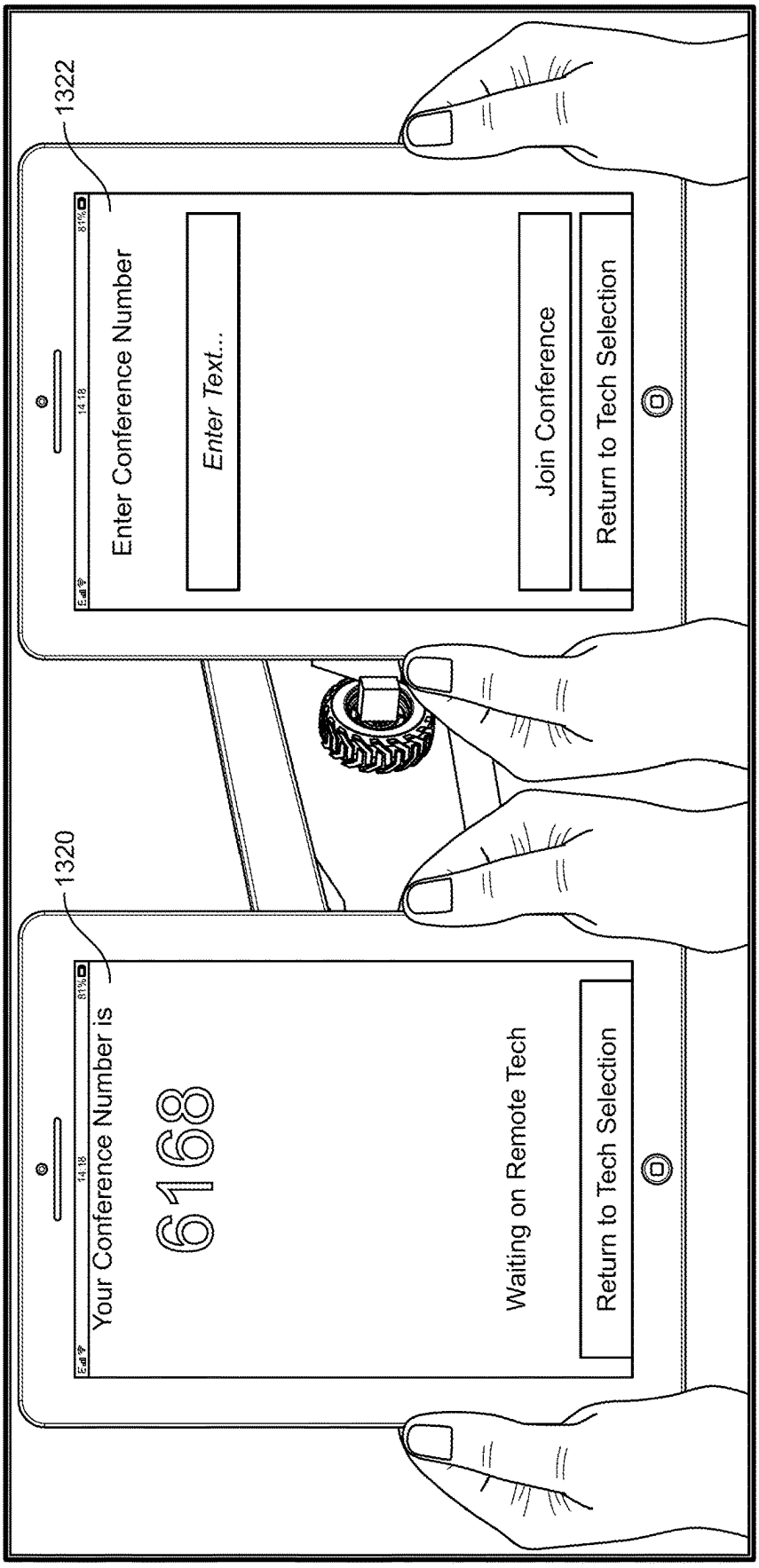
1322
Enter Conference Number
Enter Text...
Join Conference
Return to Tech Selection
1320
Your Conference Number is
6168
Waiting on Remote Tech
Return to Tech Selection

FIG. 13F

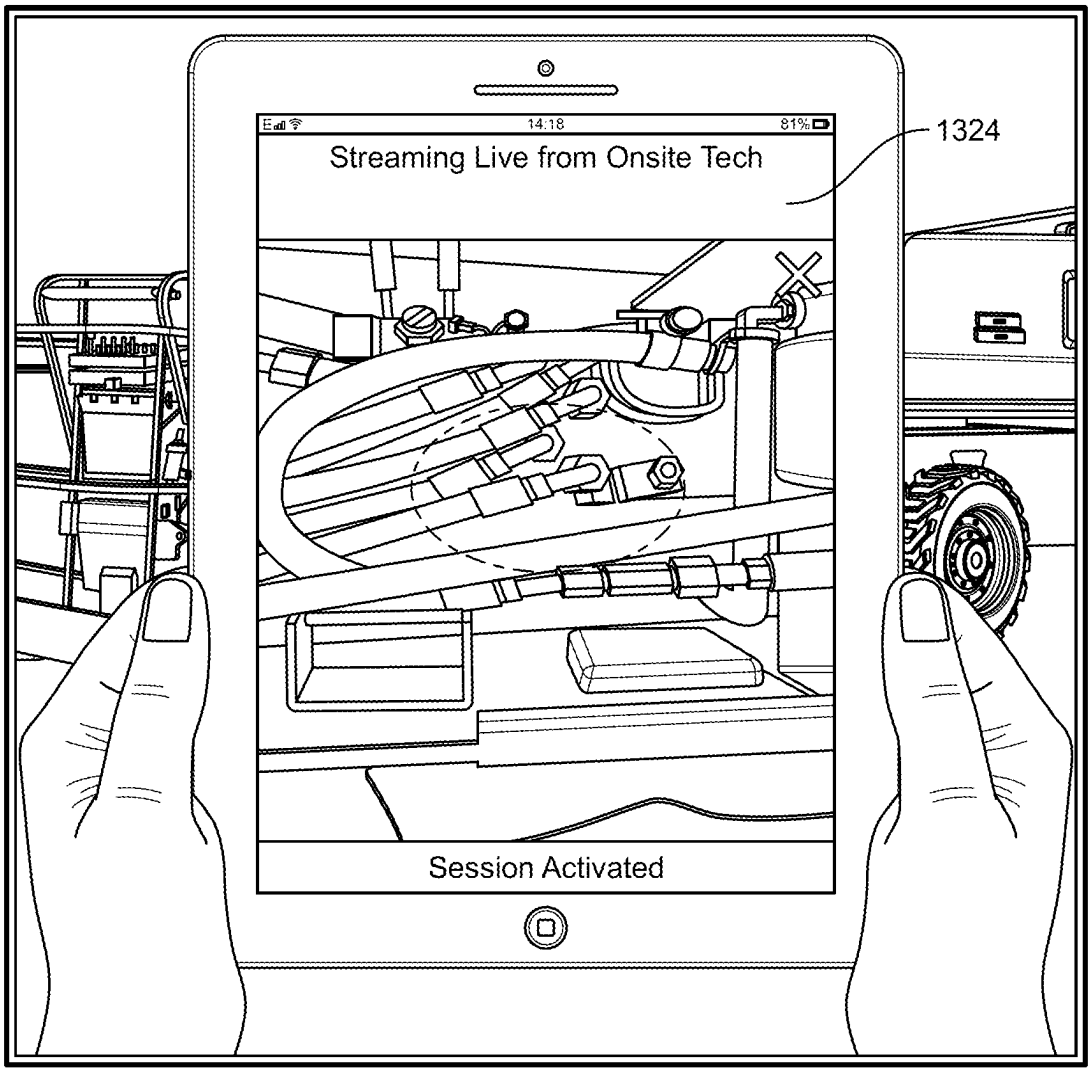
14:18
81%
Streaming Live from Onsite Tech
1324
Session Activated

FIG. 13G

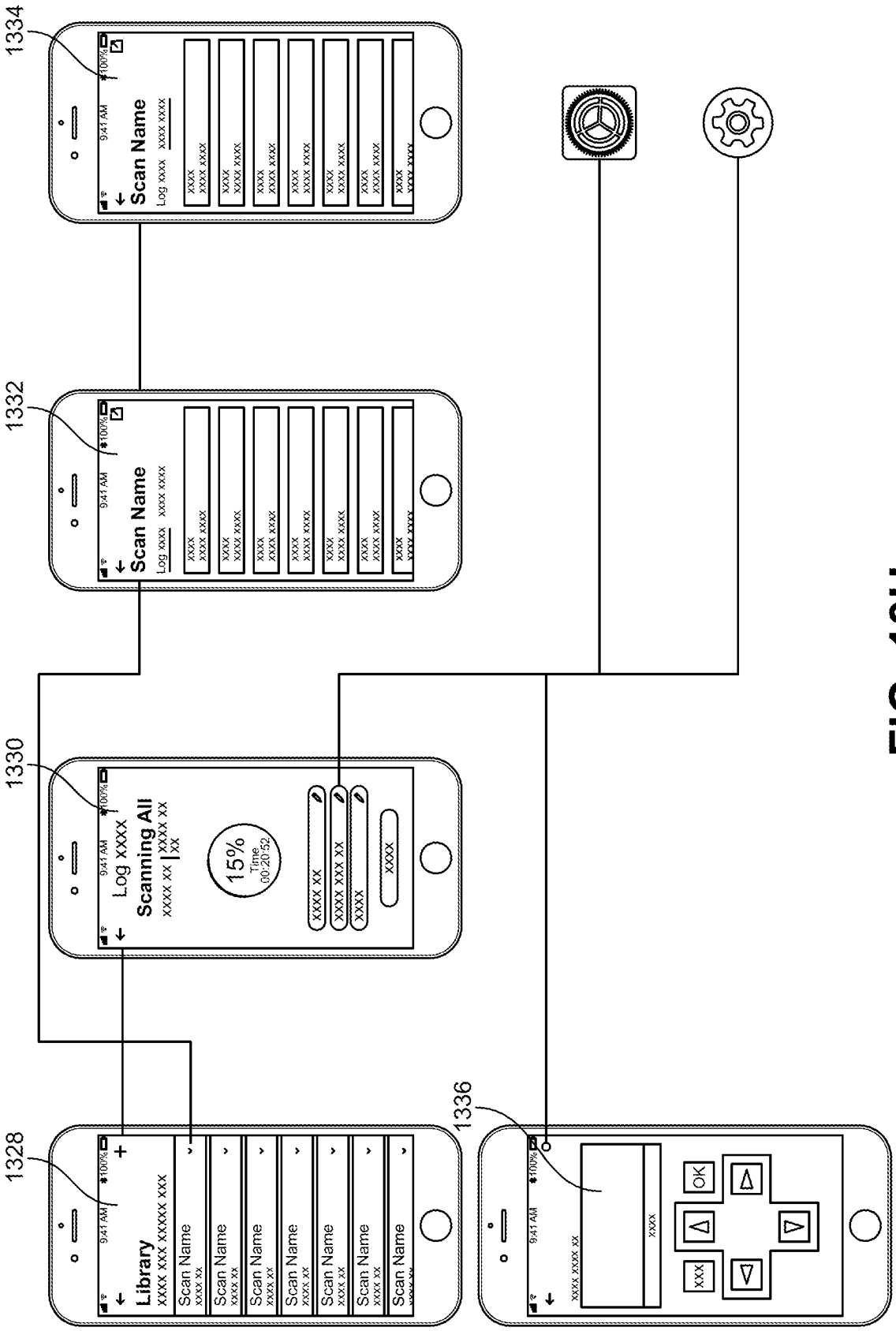
1334
1332
1330
1328
1336
Scan Name
Log xxxx xxxx xxxx
Scanning All
15%
Time
00:20:52
Library
xxxx xxx xxxxx xxx
Scan Name
OK

FIG. 13H

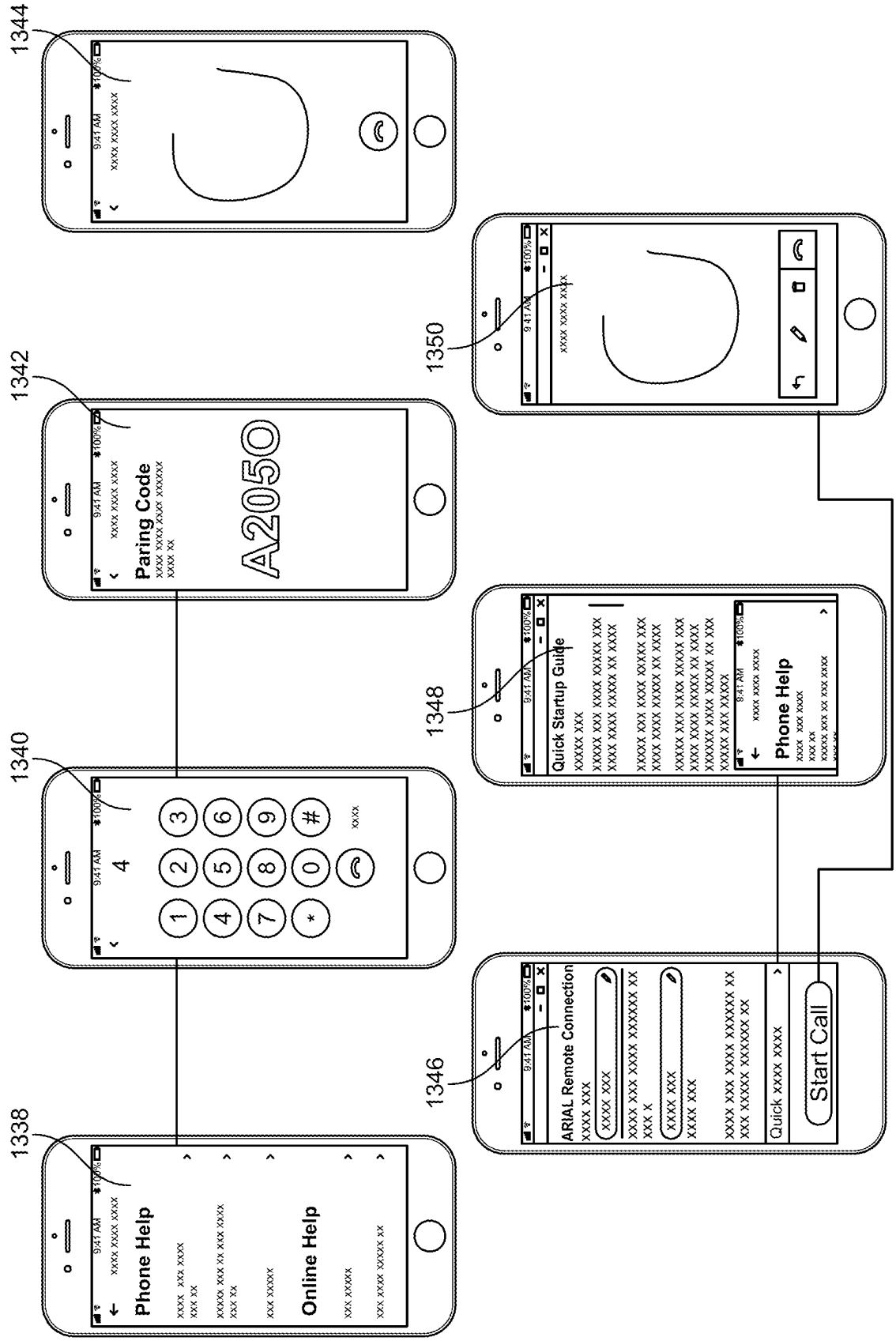
1338
Phone Help
Online Help
1340
4
1342
Paring Code
A2050
1344
1346
ARIAL Remote Connection
Start Call
1348
Quick Startup Guide
Phone Help
1350

FIG. 13I

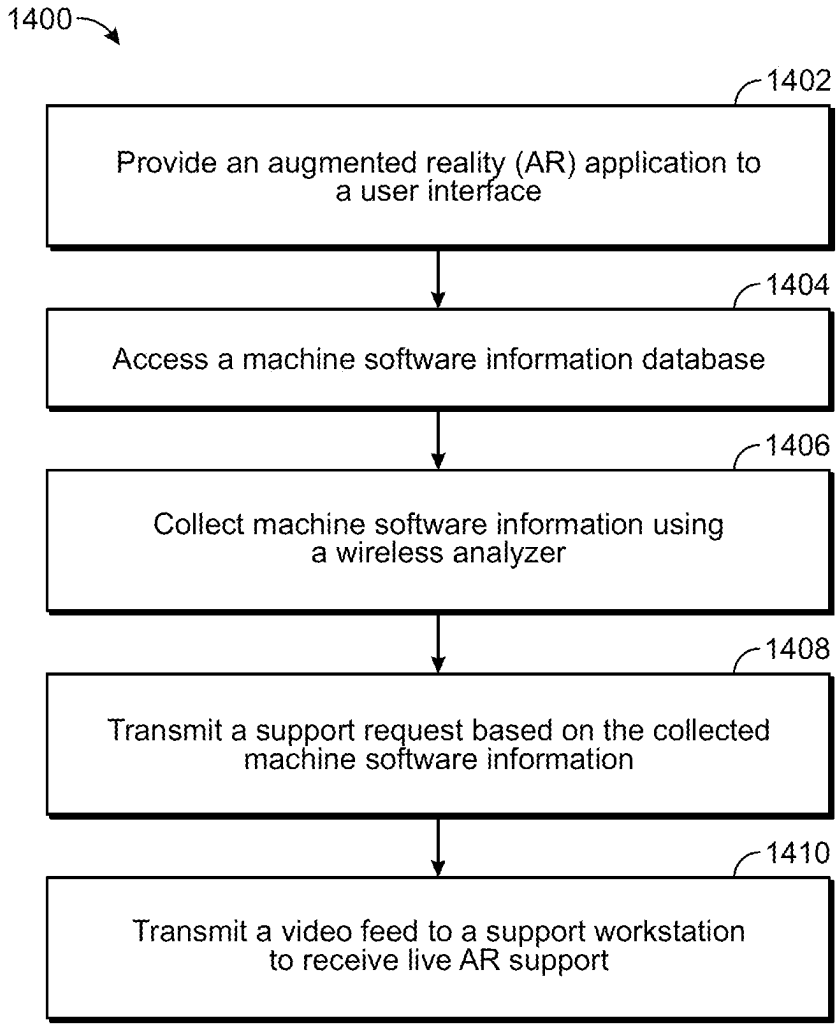
1400
1402
Provide an augmented reality (AR) application to a user interface
1404
Access a machine software information database
1406
Collect machine software information using a wireless analyzer
1408
Transmit a support request based on the collected machine software information
1410
Transmit a video feed to a support workstation to receive live AR support

FIG. 14

# SYSTEMS AND METHODS FOR AUGMENTED REALITY APPLICATION

## CROSS-REFERENCE TO RELATED APPLICATION

This application claims the benefit of and priority to U.S. Provisional Application No. 62/986,008, filed Mar. 6, 2020, which is incorporated herein by reference in its entirety.

## BACKGROUND

Conventional methods of modeling building equipment rely on virtual modeling and/or modeling based on physical operational parameters. There exists a need to provide a method for improving building equipment modeling with augmented reality applications.

## SUMMARY

This summary is illustrative only and is not intended to be in any way limiting. Other aspects, inventive features, and advantages of the devices or processes described herein will become apparent in the detailed description set forth herein, taken in conjunction with the accompanying figures, wherein like reference numerals refer to like elements.

One implementation of the present disclosure is a method for optimizing equipment inspection for a machine using augmented reality (AR). The method includes providing an AR application to a user interface. The method further includes displaying one or more selectable widgets on the user interface via AR functionality. The method further includes receiving, via the user interface, a selection of the selectable widget, the selection providing instructions to provide additional material based on the selectable widget. The method further includes displaying a detailed model of the machine based on the additional material received.

Another implementation of the present disclosure is a system for optimizing equipment inspection for a machine using augmented reality (AR). The system includes a user device to display a user interface and the machine. The system further includes a server including a processing circuit that includes one or more processors and memory storing instructions that, when executed by the one or more processors, cause the one or more processors to perform operations. The operations include providing an AR application to a user interface and displaying one or more selectable widgets on the user interface via AR functionality. The operations further include receiving, via the user interface, a selection of the selectable widget, the selection providing instructions to provide additional material based on the selectable widget. The operations further include displaying a detailed model of the machine based on the additional material received.

Another implementation of the present disclosure is a building equipment inspection tool for inspecting equipment vi augmented reality (AR). The tool includes a non-transitory computer-readable medium having instructions stored thereon that, when executed by one or more processors, cause the one or more processors to implement operations. The operations include providing an AR application to a user interface and displaying one or more selectable widgets on the user interface via AR functionality. The operations further include receiving, via the user interface, a selection of the selectable widget, the selection providing instructions to provide additional material based on the selectable widget. The operations further include displaying a detailed model of the machine based on the additional material received.



## BRIEF DESCRIPTION OF THE DRAWINGS

The disclosure will become more fully understood from the following detailed description, taken in conjunction with the accompanying figures, wherein like reference numerals refer to like elements, in which:

FIG. **1** is a block diagram of a modeling system, according to an exemplary embodiment.

FIG. **2** is a detailed block diagram of the server of FIG. **1**, according to an exemplary embodiment.

FIGS. **3**A-D are graphical user interfaces of the application of FIG. **2**, according to exemplary embodiments.

FIG. **4** is a flow diagram of a process for performing decal recognition, which may be performed by the application as shown in FIG. **2**, according to an exemplary embodiment.

FIGS. **5**A-D are graphical user interfaces of the application of FIG. **2**, according to exemplary embodiments.

FIG. **6** is a flow diagram of a process for performing an operation process, which may be performed by the application as shown in FIG. **2**, according to an exemplary embodiment.

FIGS. **7**A-E are graphical user interfaces of the application of FIG. **2**, according to exemplary embodiments.

FIG. **8** is a flow diagram of a process for performing inspections of equipment, which may be performed by the application as shown in FIG. **2**, according to an exemplary embodiment.

FIGS. **9**A-C are graphical user interfaces of the application of FIG. **2**, according to exemplary embodiments.

FIG. **10** is a flow diagram of a process for machine visualization, which may be performed by the application as shown in FIG. **2**, according to an exemplary embodiment.

FIGS. **11**A-D are graphical user interfaces of the application of FIG. **2**, according to exemplary embodiments.

FIG. **12** is a flow diagram of a process for attachment visualization, which may be performed by the application as shown in FIG. **2** according to an exemplary embodiment.

FIGS. **13**A-I are graphical user interfaces of the application of FIG. **2**, according to exemplary embodiments.

FIG. **14** is a flow diagram of a process for remotely troubleshooting a fault in a building equipment system, which may be performed by the application as shown in FIG. **2**, according to an exemplary embodiment.

## DETAILED DESCRIPTION

Before turning to the figures, which illustrate the exemplary embodiments in detail, it should be understood that the present application is not limited to the details or methodology set forth in the description, illustrated in the figures. It should also be understood that the terminology is for the purpose of description only and should not be regarded as limiting.

Overview

Throughout the life of a construction project, various pieces of construction equipment are required to perform various tasks at different times. This may require modeling of the equipment that allow the equipment users (e.g., technicians, construction workers, etc.) to predict the operation of a piece of equipment prior to using the equipment at the worksite. For example, a particular boom lift model may have a limited range of motion. Modeling software (e.g., a CAD model, etc.) may be used to determine the operational

parameters of the boom lift and determine whether the modeled boom lift indicates that the boom lift is capable of performing the required tasks at a worksite (e.g., construction site).

Accordingly, a modeling application that optimizes a user's ability to determine parameters of a piece of building equipment (e.g., boom lift, scissor lift, etc.) and/or facilitate the readiness of such equipment, is advantageous in the field. In some embodiments, this may be performed via an application (e.g., workstation application, phone application, website application, etc.) for a user that allows for modeling, analysis, inspection, and/or troubleshooting via augmented reality (AR).

In some embodiments, the AR application may include a decal recognition module configured to detect equipment decals and match the equipment decal with stored equipment information (e.g., equipment manual, etc.). The AR application may overlay a widget onto the user interface of the application after detection of the decal, such that a user may select the widget to display more detailed information relating to the building equipment. This information may be based on the detected decal, and providing a related equipment manual stored in an on premise database. The displayed information is not limited to equipment manuals and may include engineering drawings or vector graphics models (e.g., CorelDRAW models, etc.).

In some embodiments, the AR application includes an operation module configured to detect control panels and overlay computer-aided design (CAD) models on the user interface of the application using augmented reality. The AR application can receive a selection of a switch, joystick, or indicator via the user interface and display equipment information based on the selection. In some embodiments, the selection is made by a user after the CAD model overlay is implemented. The AR application may be configured to detect up to, but not limited to, **10** configurations of control panels. In some embodiments, the control panels are for boom lifts, scissor lifts, vertical lifts, compact crawler booms (CCB), and other equipment.

In some embodiments, the AR application includes annual inspection module for guiding a user (e.g., technician, equipment operator, etc.) through a series of inspection steps for inspecting the equipment. The user may provide machine, owner, and/or technician information that allows the application to determine the inspection steps for the user. The AR application my provide guiding indicators on/at/near the equipment when a user views the equipment through the application (e.g., via a camera on a smartphone, etc.). The user may select the guides to facilitate the inspection process. In some embodiments, this module can be implemented for boom lifts, scissor lifts, vertical lifts, vertical push arounds, and other equipment.

In some embodiments, the AR application includes a machine visualization module for visualizing equipment products overlaid in the real world through user devices (e.g., smartphones, tablets, etc.). The user may be able to scroll through a library of machine profiles to find machines available for a particular job. Once the machine profile is selected, the user may be prompted to place the machine on a surface (e.g., a flat surface in near the camera on the user device). Once the virtual machine is placed in the real world, a user may walk around the machine, inspect the machine, and adjust the machine settings. For example, if the user wants to see how far a boom lift may reach, the user may place the virtual machine in the real world and provide an instruction to the application that raises the virtual boom lift to its maximum height. In some embodiments, the machine visualization module includes, but is not limited to, over 125 building information models (BIMs) stored in a local database.

In some embodiments, the AR application includes an attachment visualization module for visualizing attachments for equipment overlaid in the real world through user devices. The attachment visualization module may be similar to the machine visualization module in that various attachment profiles are stored (e.g., on a local database, externally on a server, etc.) such that a user may select an attachment from a plurality of attachment profiles. This may be done so a user can see what a particular attachment (e.g., a handle) would look like overlaid on a real world piece of equipment. In some embodiments, the attachment visualization module has access to over 30 kits/accessories/attachments for overlaying on a real world piece of equipment.

In some embodiments, the AR application includes a remote troubleshooting module configured to troubleshoot faults (e.g., equipment issues, system issues, etc.) within an equipment system. This may include faults with the processing circuitry of the equipment (e.g., machine software information, etc.). The remote troubleshooting module may also include a method for contacting support for the equipment, in the event that the equipment needs to be serviced. The remote troubleshooting module may also include video sharing capabilities that allow the user to share their screen (e.g., interface of the application, etc.) with a support technician. The support technician may interact (e.g., draw on the user's screen, etc.) with the user interface to provide support via the application, which may include interaction via AR.

Augmented Reality Application

Referring now to FIG. **1**, a system **100** for implementing an augmented reality (AR) application for equipment is shown, according to an exemplary embodiment. System **100** may be a system for modeling equipment (e.g., lifts, boom lifts, scissor lifts, etc.) to facilitate predictable and reliable operation of the equipment at the worksite. System **100** is shown to include user **102**, user device **104**, AR-compatible equipment **106**, network **108**, equipment database **110**, sever **112**, application **114**, and real world **116**.

User **102** may include any individual capable of engaging with the application (e.g., AR application, etc.) via one or more user devices **104**. In an exemplary embodiment, user **102** is a technician responsible for modeling, inspecting, and/or troubleshooting the equipment (e.g., AR-compatible equipment **106**, etc.). In other embodiments, user **102** includes equipment operators, foreman, customers, and other individuals that may be associated with the project for which the equipment is needed.

User device **104** may be configured to display the AR application. In some embodiments, user device **104** is a smartphone, tablet, or other portable processing device. In other embodiments, user device **104** is a workstation capable of providing the application to a monitor for display/interaction. User device **104** may include several devices that allow more than one user to engage with the AR application. In such an embodiment, user device **104** may refer to multiple smartphones or multiple tablets for technicians at a worksite.

AR-compatible equipment **106** may include one or more pieces of equipment that have been analyzed and have had their equipment information (e.g., manuals, technical drawings, CAD models, etc.), such that the equipment information may be incorporated into the AR application. AR-compatible equipment **106** may include boom lifts, scissor lifts, vertical lifts, and other equipment and/or lifts for

construction. For example, a boom lift model A1 may have an operating manual, a CAD model, and a technical specification. These files are stored on a database (e.g., equipment database **110**) and queried by the AR application. When the AR application detects a decal of boom lift model A1, the application will provide a selectable widget overlaid on the decal. When selected by the user, the AR application may provide the operating manual, CAD model, and technical specification of the boom lift model A1 to user **102** via the user interface of user device **104**.

Network **108** may include one or more routers configured to route data from server **112** to user device **104**. In some embodiments, network **108** spans several buildings or regions such that server **112** is located off-premise from user device **104** and/or AR-compatible equipment **106**. For example, server **112** may be located at a datacenter and AR-compatible equipment **106** is located in a building several hundred miles away. Network **108** may connect these two locations via a collection of interconnected networks (e.g., the Internet, a cloud, etc.).

Equipment database **110** may be a database configured to store information relating to equipment from AR-compatible equipment **106**. In some embodiments, various equipment determined or selected to be compatible for the AR application have a set of information (e.g., technical manuals, technical specifications, CAD models, engineering drawings, etc.) that provide the operational details of the equipment. Equipment database **110** may be configured to store this information and provide the information to the AR application (e.g., application **114**) upon request. Equipment database **110** may be located locally (e.g., in the same building or region as AR-compatible equipment **106**) or off-premise. In other embodiments, equipment database **110** is located within server **112** and application **114** does not need to query an external database for equipment information.

Server **112** may be any platform configured to store, process, and secure data. In some embodiments, server **112** is a database server configured to store and process application **114**. Application **114** may be provided as software-as-a-service (SaaS). The software for application **114** may be licensed to user **102** to use on user device **104**, but application **114** may remain hosted (e.g., stored, etc.) on server **112**. In other embodiments, application **114** is stored and processed on user device **104**. In an exemplary embodiment, server **112** is shown to query equipment information from equipment database **110**. While system **100** shows application **114** being hosted off-premise, the hosting and processing may be performed on user device **104** or a local sever.

Referring now to FIG. **2**, a detailed block diagram of server **112** is shown, according to an exemplary embodiment. Server **112**, as shown in FIG. **2**, may be connected within system **100** in similar fashion as shown in FIG. **1**. Server **112** is shown to include processing circuit **202** including processor **204** and memory **206**. Processing circuit **202** can be communicably connected to server **112** such that processing circuit **202** and the various components thereof can send and receive data via a communications interface. Processor **204** can be implemented as a general purpose processor, an application specific integrated circuit (ASIC), one or more field programmable gate arrays (FPGAs), a group of processing components, or other suitable electronic processing components.

Memory **206** (e.g., memory, memory unit, storage device, etc.) can include one or more devices (e.g., RAM, ROM, Flash memory, hard disk storage, etc.) for storing data and/or computer code for completing or facilitating the various processes, layers and modules described in the present application. Memory **206** can be or include volatile memory or non-volatile memory. Memory **206** can include database components, object code components, script components, or any other type of information structure for supporting the various activities and information structures described in the present application. According to an example embodiment, memory **206** is communicably connected to processor **204** via processing circuit **202** and includes computer code for executing (e.g., by processing circuit **202** and/or processor **204**) one or more processes described herein. Memory **212** is shown to include application **208**.

Application **114** may include one or more programs provided to an end user (e.g., user **102**, etc.). As used herein, application **114**, "the application," and "the AR application" may be used interchangeably. In some embodiments, application **114** is implemented within a single computer (e.g., one server, one housing, etc.), such as server **112** as shown in FIG. **2**. In various other embodiments application **114** can be distributed across multiple servers or computers (e.g., that can exist in distributed locations). Application **114** is shown to include decal recognition module **210**, operation module **212**, annual inspection module **214**, machine visualization module **216**, kit visualization module **218**, and remote troubleshoot module **220**.

Decal recognition module **210** may be configured to detect equipment decals and match the equipment decal with stored equipment information (e.g., equipment manual, etc.). In some embodiments, decal recognition module **210** may overlay a widget onto the user interface of the application after detection of the decal, such that a user may select the widget to display more detailed information relating to the building equipment. This information may be based on the detected decal, and providing a related equipment manual stored in an on premise database. The displayed information is not limited to equipment manuals and may include engineering drawings or vector graphics models (e.g., CorelDRAW models, etc.). Further detail regarding decal recognition module **210** is described in greater detail below with reference to FIGS. **3A-4**.

Operation module **212** may be configured to detect control panels and overlay computer-aided design (CAD) models on the user interface of the application using augmented reality. Operation module **212** may receive a selection of a switch, joystick, or indicator via the user interface and display equipment information based on the selection. In some embodiments, the selection is made by a user after the CAD model overlay is implemented. In some embodiments, operation module **212** is configured to detect up to, but not limited to, **10** configurations of control panels. In some embodiments, the control panels are for boom lifts, scissor lifts, vertical lifts, compact crawler booms (CCB), and other equipment.

Annual inspection module **214** may be configured to guide user **102** (e.g., technician, equipment operator, etc.) through a series of inspection steps for inspecting the equipment. Annual inspection module **214** may provide machine, owner, and/or technician information that allows the application to determine inspection steps user **102**. In some embodiments, module **214** provides guiding indicators on/at/near AR-compatible equipment **106** when user **102** views equipment **106** through the application (e.g., via a camera on a smartphone, etc.). The user may select the guides to facilitate the inspection process. In some embodiments, this module can be implemented for boom lifts, scissor lifts, vertical lifts, vertical push arounds, and other equipment.

Machine visualization module **214** may be configured to display equipment products overlaid in the real world through user devices (e.g., smartphones, tablets, etc.). The user may be able to scroll through a library of machine profiles to find machines available for a particular job. Once the machine profile is selected, the user may be prompted to place the machine on a surface (e.g., a flat surface in near the camera on the user device). Once the virtual machine is placed in the real world, a user may walk around the machine, inspect the machine, and adjust the machine settings. For example, if the user wants to see how far a boom lift may reach, the user may place the virtual machine in the real world and provide an instruction to the application that raises the virtual boom lift to its maximum height. In some embodiments, the machine visualization module includes, but is not limited to, over 125 building information models (BIMs) stored in a local database.

Attachment visualization module **218** may be configured for visualizing attachments for equipment overlaid in the real world through user devices. Attachment visualization module **218** may be similar to the machine visualization module in that various attachment profiles are stored (e.g., on a local database, externally on a server, etc.) such that a user may select an attachment from a plurality of attachment profiles. This may be done so a user can see what a particular attachment (e.g., a handle) would look like overlaid on a real world piece of equipment. In some embodiments, attachment visualization module **218** has access to over 30 kits/accessories/attachments for overlaying on a real world piece of equipment.

Remote troubleshooting module **220** may be configured to troubleshoot faults (e.g., equipment issues, system issues, etc.) within an equipment system. This may include faults with the processing circuitry of the equipment (e.g., machine software information, etc.). The remote troubleshooting module may also include a method for contacting support for the equipment, in the event that the equipment needs to be serviced. Remote troubleshooting module **220** may also include video sharing capabilities that allow the user to share their screen (e.g., interface of the application, etc.) with a support technician. The support technician may interact (e.g., draw on the user's screen, etc.) with the user interface to provide support via the application, which may include interaction via AR.

Referring now to FIGS. **3**A-D, various embodiments of interface **300** displaying application **114** are shown, according to exemplary embodiments. Referring to FIG. **3**A, interface **300** is shown to be a graphical user interface for displaying AR functionality. Widget **302** may be provided on interface **300** to be selected by user **102**. Referring to FIG. **3**B, a warning window **310** is shown on interface **300**. Warning window **310** may be configured to displaying critical information to user **102** after the decal has been selected. This critical information may be or include precautionary recommended measures to be taken when handling the equipment or information related to operation of the equipment. Referring to FIG. **3**C, another warning window **320** is shown in interface **300**. Warning window **320** may be selected by user **102** to provide a detailed warning window **322** (see FIG. **3**C) that provides detailed information to user **102** regarding the equipment.

Referring to FIG. **3**D, a diagram for providing equipment information to application **114** is shown, according to an exemplary embodiment. FIG. **3**D shows equipment information **330** being provided to user devices **104** which are displaying interface **300**. In some embodiments, some or all of the information on the documents (e.g., equipment information **330**) can be shown on the user devices **104**. In some embodiments, application **114** is configured to capture the information via a picture and application software can process the documentation information to be used for future application purposes.

Referring now to FIG. **4**, a process **400** for recognizing decals on equipment is shown, according to an exemplary embodiment. Process **400** may be implemented by application **114** within server **112**. Process **400** is shown to include providing an augmented reality application to a user interface (step **402**). In an exemplary embodiment, user device **104** displays application **114** which may be an application that provides augmented reality functionality. Application **114** may be provided to an interface of user device **104** via instructions from user **102**, such as clicking on an application icon on user device **104**.

Process **400** is shown to include detecting one or more equipment decals (step **404**). A decal, as described herein, may refer to any design, symbol, text, or other type of information printed or stamped onto a machine for viewing purposes, such as danger, warning, caution, important, and notice stickers. User **102** may view a machine (e.g., piece of equipment) through the camera of user device **104** while displaying application **114**. Application **114** may detect a decal located on the piece of equipment when user **102** points the camera of user device **104** at the piece of equipment.

Process **400** is shown to include matching one or more equipment decals with stored equipment information (step **406**). When application **114** detects a decal, application **114** may match the decal with stored equipment information from equipment database **110**. Application **114** may query equipment database **110** prior to detecting a decal or after. For example, after application **114** detects a decal, application **114** may read a model number for the piece of equipment and query equipment database **110** for equipment information for that particular model number.

Process **400** is shown to include overlaying a selectable widget on the user interface of the application (step **408**) and receiving a selection via the selectable widget (step **410**). Once application **114** receives equipment information for the appropriate equipment, application **114** may provide a selectable widget for user **102** to engage with (e.g., click on, tap, etc.). The widget may be overlaid on top of the decal in the interface. For example, when user **102** views the decal through the camera of user device **104** and application **114** provides the overlaid selectable widget on the top of the decal, it may appear is a lightly colored (e.g., light-blue, etc.) transparent square of the same dimensions as the decal. When user **102** clicks on the widget, this may prompt application **114** to provide user **102** with equipment information for that particular piece of equipment.

Process **412** is shown to include providing equipment information to the user interface (step **412**). In step **412**, application **114** may provide the equipment information relating to the decal that may have been queried from equipment database **110**. In an exemplary embodiment, application **114** can query over 1,000 decals for different pieces/models of equipment. In other embodiments, application **114** recognizes approximately 1,600 decals that can be identified for use. Application **114** may be configured to receive new equipment information added to equipment database **110**.

Referring now to FIGS. **5**A-D, various embodiments of interface **502** are shown, according to exemplary embodiments. Interface **502** may be partially or entirely included within interface **300**. In some embodiments, application **114**

is responsible for processing, generating and/or hosting some or all of the interfaces described herein, such as interface **300** and interface **502**. FIGS. **5**A-D may be configured to show various steps through a process (e.g., process **600**, etc.) for implementing operation module **212** on user device **104**.

Referring specifically to FIG. **5**A, interface **502** shows the control operation of a piece of heavy machinery. The application **114** may be configured to automatically detect the type of control equipment viewed in user device **104**, associate it with stored equipment information, and display augmented reality data to the interface **502**, as discussed below. Referring specifically to FIG. **5**B, interface **504** shows a close-up of the controls used for operating a crawler boom equipment, and interface **502** shows the control equipment with a help window, that states, "Excessive motion may result in unstable AR behavior." In some embodiments, interface **506** can display warning messages or helpful pieces of information relating to the operation of the equipment.

Referring specifically to FIG. **5**C, interface **508** shows the control equipment for a compact crawler boom, along with a help window. In some embodiments, the help window has been generated automatically in response to application **114** processing the type of control equipment picked up via the camera within user device **104**. The help window states, "This control when moved forward or rearward simultaneously with the right side track control, allows the operator to move the machine in a straight forward or . . . " The help window provides instructions and/or assistance for operation of the machinery automatically. In some embodiments, application **114** can display safety information and installation tips. In some embodiments, the help window can provide live-updates regarding the equipment. For example, a recall occurs on a part that is installed on the compact crawler boom as shown in interface **508**. The help window subsequently displays, "Notice: It has been detected that part A has been recalled for this machine. Please refrain from operating the equipment until further notice." FIG. **5**C shows another interface **510** is shown with a window. The window states, "Used for selecting an item when the Service Menu button is pressed (item **6**). This button is also used . . . " In some embodiments, the help window can indicate what certain parts or pieces of equipment are used for and instructions on how to operate them.

Referring now to FIG. **5**D, interfaces **512-518** are shown, according to some embodiments. Interfaces **512-518** show several different types of help windows, useful information for operation of equipment, and other pieces of information that may benefit the operator of the heavy machinery.

Referring now to FIG. **6**, a process **600** for guiding operation of equipment using AR is shown, according to an exemplary embodiment. Process **600** may be implemented by application **114** within server **112**. Process **600** is shown to include providing an augmented reality application to a user interface (step **602**). In an exemplary embodiment, user device **104** displays application **114** which may be an application that provides augmented reality functionality. Application **114** may be provided to an interface of user device **104** via instructions from user **102**, such as clicking on an application icon on user device **104**.

Process **600** is shown to include detecting an equipment control panel on a piece of equipment (step **604**). As described herein, an equipment control panel may be any means of control (e.g., controller, equipment panel, etc.), capable of performing control capabilities for a piece of equipment. Application **114** may detect an equipment control panel of an AR-compatible equipment **106**, when user films real world **116** via application **114**. For example, application **114** may recognize a model number of the equipment control panel and query equipment database **110** for the matching equipment information. In other embodiments, application **114** may recognize the physical structure (e.g., dimensions, size, etc.) of the equipment control panel to determine the type/model of the equipment control panel and query equipment database **110** for the matching equipment information.

Process **600** is shown to include matching CAD model with equipment control panel (step **606**) and overlaying the CAD model with the equipment control panel on the user interface (step **608**). Once application **114** receives the matching equipment information, the equipment information may include one or more CAD models. Application **114** may provide the CAD model of the detected piece of equipment as an overlay on top of the actual piece of equipment in real world **116**. In an exemplary embodiment, the overlaid CAD model may appear as a lightly colored (e.g., light-blue, etc.) transparent square of the same dimensions as the equipment control panel.

Process **600** is shown to include receiving a selection of a switch, joystick, or indicator via the user interface (step **610**) and displaying equipment information based on the selection (step **612**). Once user **102** is able to view the overlaid CAD model on top of the equipment control panel, user **102** may click on various parts of the CAD model, such as the virtual switch, joystick, or indicator of the virtual equipment control panel. For example, user **102** clicks on a switch on the virtual equipment control panel via user device **104**. Application **114** receives the selection and provides the user with detailed information relating to the selected switch, such as the functionality of the switch, how to operate the switch, etc.

In an exemplary embodiment, process **600** may further include a step for guiding user **102** to prepare the machine for operation. This may include using virtual guides and/or signals to guide user **102** throughout the process, such as the guides shown with reference to FIGS. **5**A-D. Process **600** may be performed in **20** languages or more and may be configured for a variety of equipment (e.g., boom lifts, scissor lifts, vertical lifts, etc.). Operation module **212** may be capable of performing process **600** for up to, but not limited to, **10** configurations, but may include capability for control panel information for other equipment types/models to be incorporated in the future.

Referring now to FIGS. **7**A-E, various embodiments of different interfaces are shown, according to exemplary embodiments. FIGS. **7**A-E may be configured to show various steps through a process (e.g., process **800**, etc.) for implementing annual inspection module **214** on user device **104**. Referring specifically to FIG. **7**A, interface **702** is shown to include inspection information for a product of piece of equipment. In FIG. **7**B, interface **704** is shown to include additional information relating to an inspection, the interface **704** shows multiple steps for checking the operation of the equipment (e.g., Boom Weldments, Cable System, etc.) shown in sequential order. In FIG. **7**C, interface **706** shows application **114** generating the inspection report. In FIG. **7**D, interface **708** shows the generated inspection report based on the testing performed as shown in interfaces **702-704**.

Referring now to FIG. **7**E, several interfaces (e.g., interface **710**, interface **712**, interface **714**, interface **716**, interface **718**, interface **720**, interface **722**, interface **724**, and interface **726**) are shown to display inspection library infor-

mation and other inspection information. Particularly, interface **726** shows a widget for determining whether the product passed inspection, failed inspection, completed inspection, or if it is not applicable.

Referring now to FIG. **8**, a process **800** for inspecting equipment using AR is shown, according to an exemplary embodiment. Process **800** may be implemented by application **114** within server **112**. Process **800** is shown to include providing an augmented reality application to a user interface (**802**). In an exemplary embodiment, user device **104** displays application **114** which may be an application that provides augmented reality functionality. Application **114** may be provided to an interface of user device **104** via instructions from user **102**, such as clicking on an application icon on user device **104**.

Process **800** is shown to include displaying an annual inspection process on the user interface (step **804**). In an exemplary embodiment, the annual inspection includes a series of steps that user **102** may perform to facilitate stable and reliable operation of a piece of equipment. These steps may include checking the tightness of bolts, greasing parts of the equipment, checking power/torque levels, and other various inspection steps.

Process **800** is shown to include receiving machine, owner, and/or technician information. In some embodiments, application **414** is provided the information necessary to determine the type of equipment/model that is to be inspected. This may include user **102** providing the model number, product number, or other information. User **102** may also provide other information for logging purposes, such that the application **114** can know who is inspecting which machine.

Process **800** is shown to include providing information to direct a user to inspect the equipment (step **808**) and receiving an update based on the inspection, including passed, failed, or needs correction (step **810**). Application **114** may process the received information from user **102** and direct them through a series of steps to inspect the machine. Upon completion of the step, user **102** may indicate via application **114** that the step has been completed. If the Referring now to FIGS. **9**A-C, various embodiments of interface (e.g., interfaces **902**, interface **904**, interface **906**, interface **908**, and interfaces **910-924**) are shown, according to exemplary embodiments. FIGS. **9**A-C may be configured to show various steps through a process (e.g., process **1000**, etc.) for implementing annual inspection module **216** on user device **104**.

Referring specifically to FIG. **9**A, interfaces **902** and **904** show an articulating boom lift being overlaid in the physical word. The articulating boom lift shown within interface **902** is a virtual representation of a physical boom lift. In some embodiments, the virtual equipment can be adjusted, raised, stowed, rotated, moved, and otherwise manipulated virtually, while it overlaid in the real world via the camera in user device **104**. This is similarly shown in interfaces **906** and **908** of FIG. **9**B, where an electric scissor lift is overlaid in the real word, and can be moved, closed, opened, rotated, elevated or otherwise manipulated virtually. Referring specifically to FIG. **9**C, interfaces **910-924** display other examples of overlaying virtual machines or components within a physical world via a user device **104**.

Referring now to FIG. **10**, a process **1000** for visualizing machines in AR is shown, according to an exemplary embodiment. Process **1000** may be implemented by application **114** within server **112**. Process **1000** is shown to include providing an augmented reality application to a user interface (step **1002**). In an exemplary embodiment, user device **104** displays application **114** which may be an application that provides augmented reality functionality. Application **114** may be provided to an interface of user device **104** via instructions from user **102**, such as clicking on an application icon on user device **104**.

Process **1000** is shown to include selecting a machine profile from a database of machine profiles (step **1004**). In an exemplary embodiment, equipment database **110** includes several machine (e.g., pieces of equipment, etc.) profiles. These profiles may include information relating to the machines that indicate their physical structure, design, or operational parameters. For example, equipment database **110** includes a profile for boom lift model A**1** that includes the dimensions of the boom lift, operational parameters (e.g., current draw, required operational voltage, torque output, maximum lift height, etc.), and lift capabilities (e.g., how far the lift can reach, etc.). Machine visualization module **216** may be configured to process this equipment information and generate a virtual model that may be displayed on a user interface through application **114** via AR.

Process **1000** is shown to include overlaying the virtual machine in the real world (step **1006**). In some embodiments, application **104** may provide the virtual machine to user device **104** via AR. In an exemplary embodiment, the virtual machine may resemble the physical structure of the actual machine for viewing purposes.

Process **1000** is shown to include adjusting the virtual machine based on instructions received via the user interface (step **1008**). Once application **114** displays the virtual machine on the interface of user device **104**, user **102** may be able to walk around the virtual machine and observe the machine from different perspectives. Additionally, user **102** may provide instructions to adjust the virtual machine via user device **104**, such as extending the lift of the virtual machine. User **102** may be able to provide adjustments to the virtual machine for further observation purposes.

Referring now to FIGS. **11**A-D, various embodiments of interfaces (e.g., interfaces **1102**, **1104**, **1106**, **1108**, and **1110**) are shown, according to exemplary embodiments. FIGS. **11**A-D may be configured to show various steps through a process (e.g., process **1200**, etc.) for implementing annual inspection module **218** on user device **104**.

Referring now to FIG. **12**, a process **1200** for visualizing attachments for equipment in AR is shown, according to an exemplary embodiment. Process **1200** may be implemented by application **114** within server **112**. Process **1200** is shown to include providing an augmented reality application to a user interface (step **1202**). In an exemplary embodiment, user device **104** displays application **114** which may be an application that provides augmented reality functionality. Application **114** may be provided to an interface of user device **104** via instructions from user **102**, such as clicking on an application icon on user device **104**.

Process **1200** is shown to include selecting an attachment profile from a database of attachment profiles (step **1204**). In an exemplary embodiment, equipment database **110** includes several attachment (e.g., attachments to pieces of equipment, etc.) profiles. These profiles may include information relating to the attachments to machines that indicate their physical structure, design, or operational parameters. For example, equipment database **110** includes a profile for railing for boom lift model A**1** that includes the dimensions of the railing. Attachment visualization module **218** may be configured to process this equipment information and generate a virtual model of the attachment that may be displayed on a user interface through application **114** via AR.

Process **1200** is shown to include overlaying the virtual attachment on an equipment device in the real word, based on instructions received via the user interface (step **1206**). In some embodiments, application **104** may provide the virtual attachment to user device **104** via AR. In an exemplary embodiment, the virtual attachment may resemble the physical structure of the actual machine for viewing purposes.

Referring now to FIGS. **13**A-I, various embodiments of interfaces (e.g., **1302-1350**) are shown, according to exemplary embodiments. FIGS. **13**A-I may be configured to show various steps through a process (e.g., process **1400**, etc.) for implementing annual inspection module **220** on user device **104**.

Referring now to FIG. **14**, a process **1400** for troubleshooting equipment using AR is shown, according to an exemplary embodiment. Process **1400** may be implemented by application **114** within server **112**. Process **1400** is shown to include providing an augmented application to a user interface (step **1402**).

Process **1400** is shown to include accessing a machine software information database (step **1404**). Step **1404** may be performed using a wireless access network analyzer dongle (e.g., WANalyzer). The WANalyzer may allow user **102** to access machine software information that may be stored directly within memory on AR-compatible equipment **106** or within equipment database **110**. In an exemplary embodiment, the WANalyzer is an external component connected wired or wirelessly to user device **104** that, when connected, application **114** queries a machine for its machine software information via the WANalyzer.

Process **1400** is shown to include collecting machine software information using a wireless analyzer (step **1406**). This may allow user **102** to see all machine information in a summary form (e.g., on the user interface of user device **104**, etc.) instead of scrolling through interface at each level and separately keeping track of the information. This information may be saved to the user's phone or tablet and associated with the specific machine. This information may then be shared via email or other means.

Process **1400** is shown to include transmitting a support request based on the collected machine software information (step **1408**). This may allow user **102** to place a phone call to support services (e.g., service technicians, service company, etc.). In an exemplary embodiment, a machine summary may need to be implemented prior to performing a service call. The machine summary can then be shared with the support services, which can save time in troubleshooting and fault detection.

Process **1400** is shown to include transmitting video feed to a support workstation to provide live AR support (step **1410**). This may allow user **102** to share their phone or tablet (e.g., user device **104**) camera with the support services and allow support services to interact (e.g., draw on screen) with application **114** on user device **104** and visualize equipment or components to user device **104** in AR.

Configuration of Exemplary Embodiments

As utilized herein, the terms "approximately," "about," "substantially", and similar terms are intended to have a broad meaning in harmony with the common and accepted usage by those of ordinary skill in the art to which the subject matter of this disclosure pertains. It should be understood by those of skill in the art who review this disclosure that these terms are intended to allow a description of certain features described and claimed without restricting the scope of these features to the precise numerical ranges provided. Accordingly, these terms should be interpreted as indicating that insubstantial or inconsequential modifications or alterations of the subject matter described and claimed are considered to be within the scope of the disclosure as recited in the appended claims.

It should be noted that the term "exemplary" and variations thereof, as used herein to describe various embodiments, are intended to indicate that such embodiments are possible examples, representations, or illustrations of possible embodiments (and such terms are not intended to connote that such embodiments are necessarily extraordinary or superlative examples).

The term "coupled" and variations thereof, as used herein, means the joining of two members directly or indirectly to one another. Such joining may be stationary (e.g., permanent or fixed) or moveable (e.g., removable or releasable). Such joining may be achieved with the two members coupled directly to each other, with the two members coupled to each other using a separate intervening member and any additional intermediate members coupled with one another, or with the two members coupled to each other using an intervening member that is integrally formed as a single unitary body with one of the two members. If "coupled" or variations thereof are modified by an additional term (e.g., directly coupled), the generic definition of "coupled" provided above is modified by the plain language meaning of the additional term (e.g., "directly coupled" means the joining of two members without any separate intervening member), resulting in a narrower definition than the generic definition of "coupled" provided above. Such coupling may be mechanical, electrical, or fluidic.

References herein to the positions of elements (e.g., "top," "bottom," "above," "below") are merely used to describe the orientation of various elements in the FIGURES. It should be noted that the orientation of various elements may differ according to other exemplary embodiments, and that such variations are intended to be encompassed by the present disclosure.

The hardware and data processing components used to implement the various processes, operations, illustrative logics, logical blocks, modules and circuits described in connection with the embodiments disclosed herein may be implemented or performed with a general purpose single- or multi-chip processor, a digital signal processor (DSP), an application specific integrated circuit (ASIC), a field programmable gate array (FPGA), or other programmable logic device, discrete gate or transistor logic, discrete hardware components, or any combination thereof designed to perform the functions described herein. A general purpose processor may be a microprocessor, or, any conventional processor, controller, microcontroller, or state machine. A processor also may be implemented as a combination of computing devices, such as a combination of a DSP and a microprocessor, a plurality of microprocessors, one or more microprocessors in conjunction with a DSP core, or any other such configuration. In some embodiments, particular processes and methods may be performed by circuitry that is specific to a given function. The memory (e.g., memory, memory unit, storage device) may include one or more devices (e.g., RAM, ROM, Flash memory, hard disk storage) for storing data and/or computer code for completing or facilitating the various processes, layers and modules described in the present disclosure. The memory may be or include volatile memory or non-volatile memory, and may include database components, object code components, script components, or any other type of information structure for supporting the various activities and information structures described in the present disclosure. According to an exemplary embodiment, the memory is communicably

connected to the processor via a processing circuit and includes computer code for executing (e.g., by the processing circuit or the processor) the one or more processes described herein.

The present disclosure contemplates methods, systems and program products on any machine-readable media for accomplishing various operations. The embodiments of the present disclosure may be implemented using existing computer processors, or by a special purpose computer processor for an appropriate system, incorporated for this or another purpose, or by a hardwired system. Embodiments within the scope of the present disclosure include program products comprising machine-readable media for carrying or having machine-executable instructions or data structures stored thereon. Such machine-readable media can be any available media that can be accessed by a general purpose or special purpose computer or other machine with a processor. By way of example, such machine-readable media can comprise RAM, ROM, EPROM, EEPROM, or other optical disk storage, magnetic disk storage or other magnetic storage devices, or any other medium which can be used to carry or store desired program code in the form of machine-executable instructions or data structures and which can be accessed by a general purpose or special purpose computer or other machine with a processor. Combinations of the above are also included within the scope of machine-readable media. Machine-executable instructions include, for example, instructions and data which cause a general purpose computer, special purpose computer, or special purpose processing machines to perform a certain function or group of functions.

Although the figures and description may illustrate a specific order of method steps, the order of such steps may differ from what is depicted and described, unless specified differently above. Also, two or more steps may be performed concurrently or with partial concurrence, unless specified differently above. Such variation may depend, for example, on the software and hardware systems chosen and on designer choice. All such variations are within the scope of the disclosure. Likewise, software implementations of the described methods could be accomplished with standard programming techniques with rule-based logic and other logic to accomplish the various connection steps, processing steps, comparison steps, and decision steps.

It is important to note that the construction and arrangement of the applications (e.g., application **114**) as shown in the various exemplary embodiments is illustrative only. Additionally, any element disclosed in one embodiment may be incorporated or utilized with any other embodiment disclosed herein. For example, the module **210** of the exemplary embodiment shown in FIG. **2** may be incorporated in module **212** of the exemplary embodiment shown in FIG. **2**. Although only one example of an element from one embodiment that can be incorporated or utilized in another embodiment has been described above, it should be appreciated that other elements of the various embodiments may be incorporated or utilized with any of the other embodiments disclosed herein.

What is claimed is:

**1**. A method for optimizing equipment inspection for a machine using augmented reality (AR), the method comprising:

providing an AR application to a user interface;

obtaining image data of an equipment decal on the machine, the equipment decal comprising at least one symbol and at least one printed word describing a warning regarding a characteristic of the machine;

determining a model of the machine by matching the at least one symbol and the at least one printed word of the equipment decal with a corresponding at least one symbol and at least one printed word of a corresponding equipment decal in a database of predetermined decals and retrieving warning information corresponding to the characteristic of the machine;

displaying one or more selectable widgets for the equipment decal on the user interface via AR functionality;

receiving, via the user interface, a selection of the selectable widget, the selection providing instructions to provide additional material based on the selectable widget; and

prior to operation of the machine, displaying the warning information to warn the user regarding the characteristic of the machine, recommended operation of the machine and precautionary measures for the machine to avoid a potential hazard that may result due to improper operation of the machine.

**2**. The method of claim **1**, wherein the equipment decal comprises at least one of a danger decal, a warning decal, a caution decal, an important decal, or a notice decal.

**3**. The method of claim **1**, further comprising:

detecting, via the user interface, an equipment control panel on the machine;

matching the equipment control panel with a second set of stored equipment information;

overlaying a second selectable widget with the equipment control panel on the user interface of the AR application; and

providing the second set of stored equipment information to the user interface.

**4**. The method of claim **1**, further comprising:

displaying an annual inspection process on the user interface;

receiving, via the user interface, at least one of a machine, owner, or technician information;

directing a user to inspect the machine based on the at least one of a machine, owner, or technician information; and

receiving an update based on the inspection, wherein the update comprises an indication of passing inspection, failing inspection, or needing correction.

**5**. The method of claim **1**, further comprising:

selecting a machine profile from a database of machine profiles;

overlaying a virtual machine in the real world, wherein the virtual machine is based on the machine profile; and

adjusting the virtual machine based on instructions received via the user interface.

**6**. The method of claim **1**, further comprising:

selecting an attachment profile for a machine from a database of attachment profiles;

overlaying a virtual attachment on an equipment device in the real world, wherein the virtual attachment is based on the attachment profile; and

adjusting the virtual attachment based on instructions received via the user interface.

**7**. The method of claim **1**, further comprising:

accessing a machine software information database;

collecting a set of machine software information for a chosen machine;

transmitting a support request based on the collected set of machine software information; and

transmitting a video feed to a support workstation to receive live AR support.

8. A system for optimizing equipment inspection for a machine using augmented reality (AR), the system comprising:

a user device configured to display a user interface and the machine; and

a server comprising a processing circuit configured to perform operations comprising:

providing an AR application to a user interface;

obtaining image data of an equipment control panel on the machine, the equipment control panel comprising at least one joystick configured to operate an implement of the machine;

matching the equipment control panel with a corresponding equipment control panel in a database of predetermined equipment control panels based on a layout of input devices including the at least one joystick of the equipment control panel, and retrieving a set of stored equipment information associated with the equipment control panel;

overlaying a digital model of the equipment control panel on the user interface, the digital model being a three-dimensional graphical representation of the equipment control panel;

receiving, via the user interface, a selection of an element of the digital model of the equipment control panel, the element corresponding to the joystick of the equipment control panel, the selection providing instructions to provide a corresponding portion of the set of stored equipment information for the joystick of the equipment control panel; and

displaying the corresponding portion of the set of stored equipment information for the joystick of the equipment control panel in response to the selection, the corresponding portion of the set of stored equipment information comprising a textual description of a function of the joystick and how to operate the joystick.

9. The system of claim 8, wherein the processing circuit is further configured to:

detect, via the user interface, an equipment decal on the machine;

match the equipment decal with a first set of stored equipment information;

overlay a first selectable widget with the equipment decal on the user interface of the AR application; and

provide the first set of stored equipment information to the user interface.

10. The system of claim 9, wherein the equipment decal comprises at least one of a danger decal, a warning decal, a caution decal, an important decal, or a notice decal.

11. The system of claim 8, wherein the processing circuit is further configured to:

display an annual inspection process on the user interface;

receive, via the user interface, at least one of a machine, owner, or technician information;

direct a user to inspect the machine based on the at least one of a machine, owner, or technician information; and

receive an update based on the inspection, wherein the update comprises an indication of passing inspection, failing inspection, or needing correction.

12. The system of claim 8, wherein the processing circuit is further configured to:

select a machine profile from a database of machine profiles;

overlay a virtual machine in the real world, wherein the virtual machine is based on the machine profile; and

adjust the virtual machine based on instructions received via the user interface.

13. The system of claim 8, wherein the processing circuit is further configured to:

select an attachment profile for a machine from a database of attachment profiles;

overlay a virtual attachment on an equipment device in the real world, wherein the virtual attachment is based on the attachment profile; and

adjust the virtual attachment based on instructions received via the user interface.

14. The system of claim 8, wherein the processing circuit is further configured to:

access a machine software information database;

collect a set of machine software information for a chosen machine;

transmit a support request based on the collected set of machine software information; and

transmit a video feed to a support workstation to receive live AR support.

15. An equipment inspection tool for inspecting equipment via augmented reality (AR), the equipment inspection tool comprising processing circuitry configured to implement operations comprising:

providing an AR application to a user interface;

obtaining image data of an equipment control panel on the equipment, the equipment control panel comprising at least one joystick configured to operate an implement of the equipment;

matching the equipment control panel with a corresponding equipment control panel in a database of predetermined equipment control panels based on a layout of input devices including the at least one joystick of the equipment control panel, and retrieving a set of stored equipment information associated with the equipment control panel;

overlaying a digital model of the equipment control panel on the user interface, the digital model being a three-dimensional graphical representation of the equipment control panel;

receiving, via the user interface, a selection of an element of the digital model of the equipment control panel, the element corresponding to the joystick of the equipment control panel, the selection providing instructions to provide a corresponding portion of the set of stored equipment information for the joystick of the equipment control panel; and

displaying the corresponding portion of the set of stored equipment information for the joystick of the equipment control panel in response to the selection, the corresponding portion of the set of stored equipment information comprising a textual description of a function of the joystick and how to operate the joystick.

16. The equipment inspection tool of claim 15, wherein the processing circuitry is further configured to to:

detect, via the user interface, an equipment decal on the equipment;

match the equipment decal with a first set of stored equipment information;

overlay a first selectable widget with the equipment decal on the user interface of the AR application; and

provide the first set of stored equipment information to the user interface.

17. The equipment inspection tool of claim 15, wherein the processing circuitry is further configured to:

detect, via the user interface, an equipment control panel on the equipment;

match the equipment control panel with a second set of stored equipment information;

overlay a second selectable widget with the equipment control panel on the user interface of the AR application; and

provide the second set of stored equipment information to the user interface.

**18**. The equipment inspection tool of claim **15**, wherein the processing circuitry is further configured to:

display an annual inspection process on the user interface;

receive, via the user interface, at least one of a machine, owner, or technician information;

direct a user to inspect the machine based on the at least one of a machine, owner, or technician information; and

receive an update based on the inspection, wherein the update comprises an indication of passing inspection, failing inspection, or needing correction.

**19**. The equipment inspection tool of claim **15**, wherein the processing circuitry is further configured to:

select a machine profile from a database of machine profiles;

overlay a virtual machine in the real world, wherein the virtual machine is based on the machine profile; and

adjust the virtual machine based on instructions received via the user interface.

**20**. The equipment inspection tool of claim **15**, wherein the processing circuitry is further configured to:

access a machine software information database;

collect a set of machine software information for a chosen machine;

transmit a support request based on the collected set of machine software information; and

transmit a video feed to a support workstation to receive live AR support.

* * * * *