US012388707B2

(12) **United States Patent**
Singh

(10) **Patent No.: US 12,388,707 B2**
(45) **Date of Patent: Aug. 12, 2025**

(54) **CUSTOMIZATION OF NON-CONFIGURED USER EQUIPMENT**

(71) Applicant: **Charter Communications Operating, LLC**, St. Louis, MO (US)

(72) Inventor: **Lakhbir Singh**, Aurora, CO (US)

(73) Assignee: **Charter Communications Operating, LLC**, St. Louis, MO (US)

(*) Notice: Subject to any disclaimer, the term of this patent is extended or adjusted under 35 U.S.C. 154(b) by 0 days.

(21) Appl. No.: **18/229,800**

(22) Filed: **Aug. 3, 2023**

(65) **Prior Publication Data**

US 2025/0047555 A1 Feb. 6, 2025

(51) **Int. Cl.**

G06F 15/177	(2006.01)
G06F 8/61	(2018.01)
H04L 41/0803	(2022.01)
H04W 48/16	(2009.01)
H04W 48/18	(2009.01)

(52) **U.S. Cl.**

CPC ***H04L 41/0803*** (2013.01); ***G06F 8/61*** (2013.01); ***H04W 48/16*** (2013.01); ***H04W 48/18*** (2013.01)

(58) **Field of Classification Search**

None

See application file for complete search history.

(56) **References Cited**

U.S. PATENT DOCUMENTS

2014/0157255 A1* 6/2014 Chan G06F 8/61 717/177

* cited by examiner

Primary Examiner — Wing F Chan
Assistant Examiner — Andrew Woo
(74) *Attorney, Agent, or Firm* — Armis IP Law, LLC

(57) **ABSTRACT**

As discussed herein, in response to detecting absence of an operating system installed on the mobile communication device, communication management hardware of a mobile communication device establishes a wireless communication link between the mobile communication device and a remote management entity. The communication device communicates attributes of the mobile communication device over the wireless communication link to the management entity. Based on the attributes, the mobile communication device receives identities of multiple operating systems available for retrieval and installation onto the mobile communication device.

29 Claims, 12 Drawing Sheets

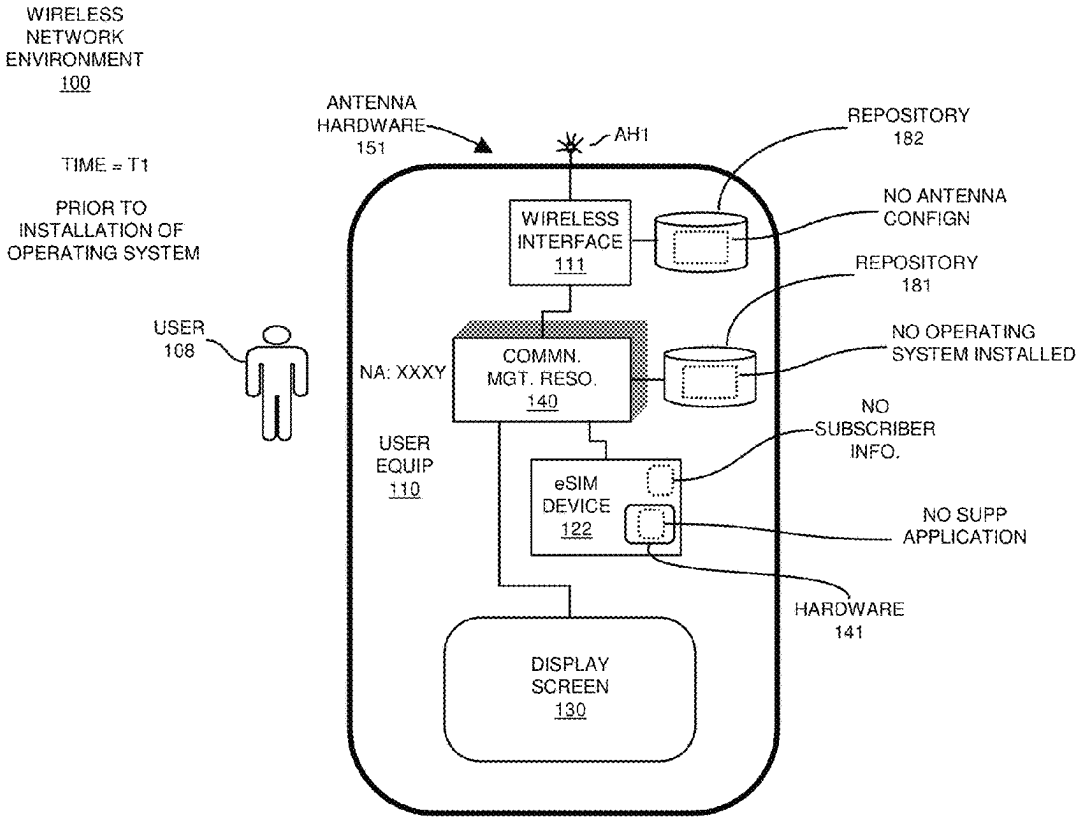

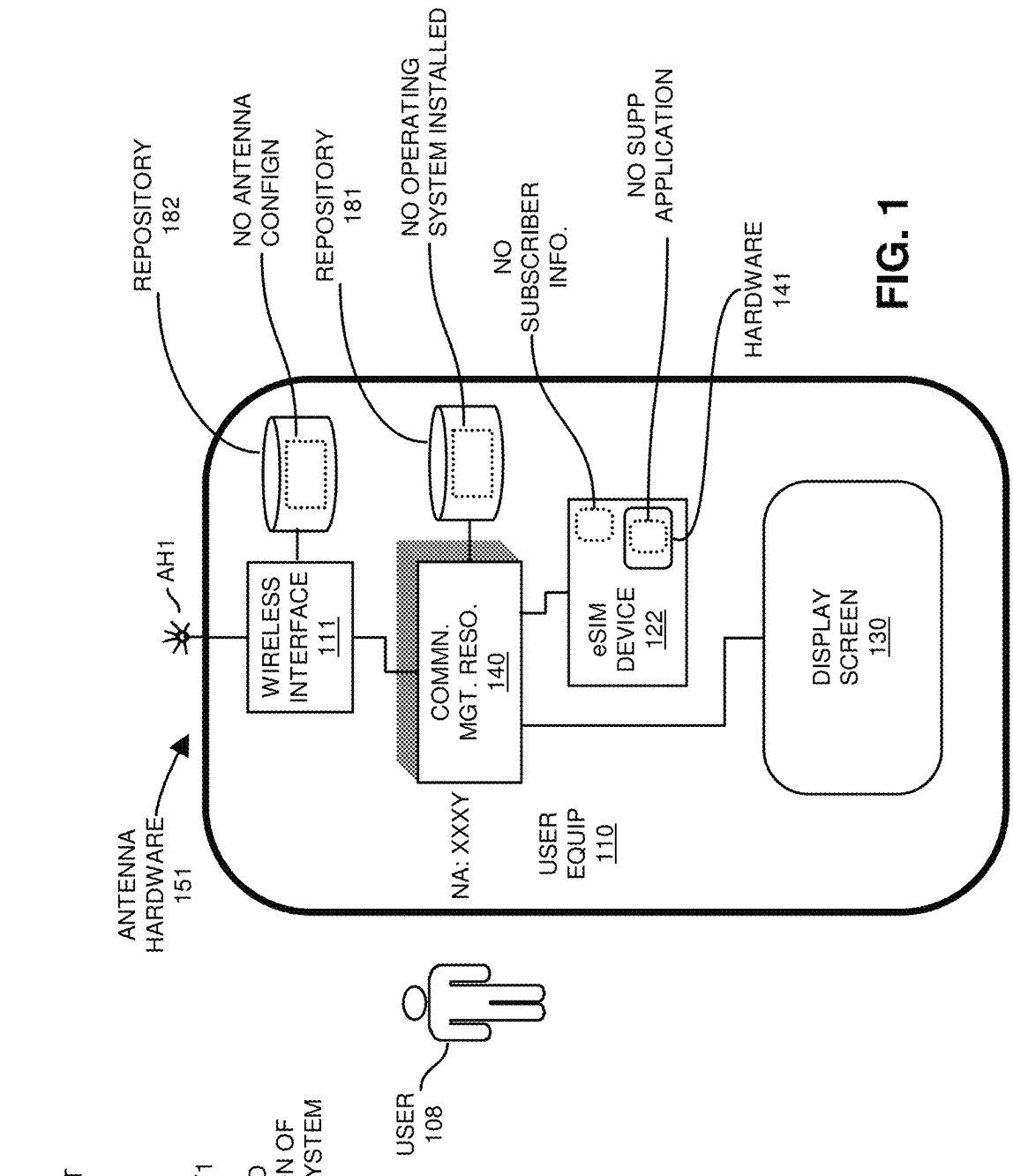
WIRELESS NETWORK ENVIRONMENT 100
TIME = T1
PRIOR TO INSTALLATION OF OPERATING SYSTEM
USER 108
ANTENNA HARDWARE 151
AH1
WIRELESS INTERFACE 111
COMMN. MGT. RESO. 140
NA: XXXY
USER EQUIP 110
eSIM DEVICE 122
DISPLAY SCREEN 130
REPOSITORY 182
NO ANTENNA CONFIGN
REPOSITORY 181
NO OPERATING SYSTEM INSTALLED
NO SUBSCRIBER INFO.
NO SUPP APPLICATION
HARDWARE 141

FIG. 1

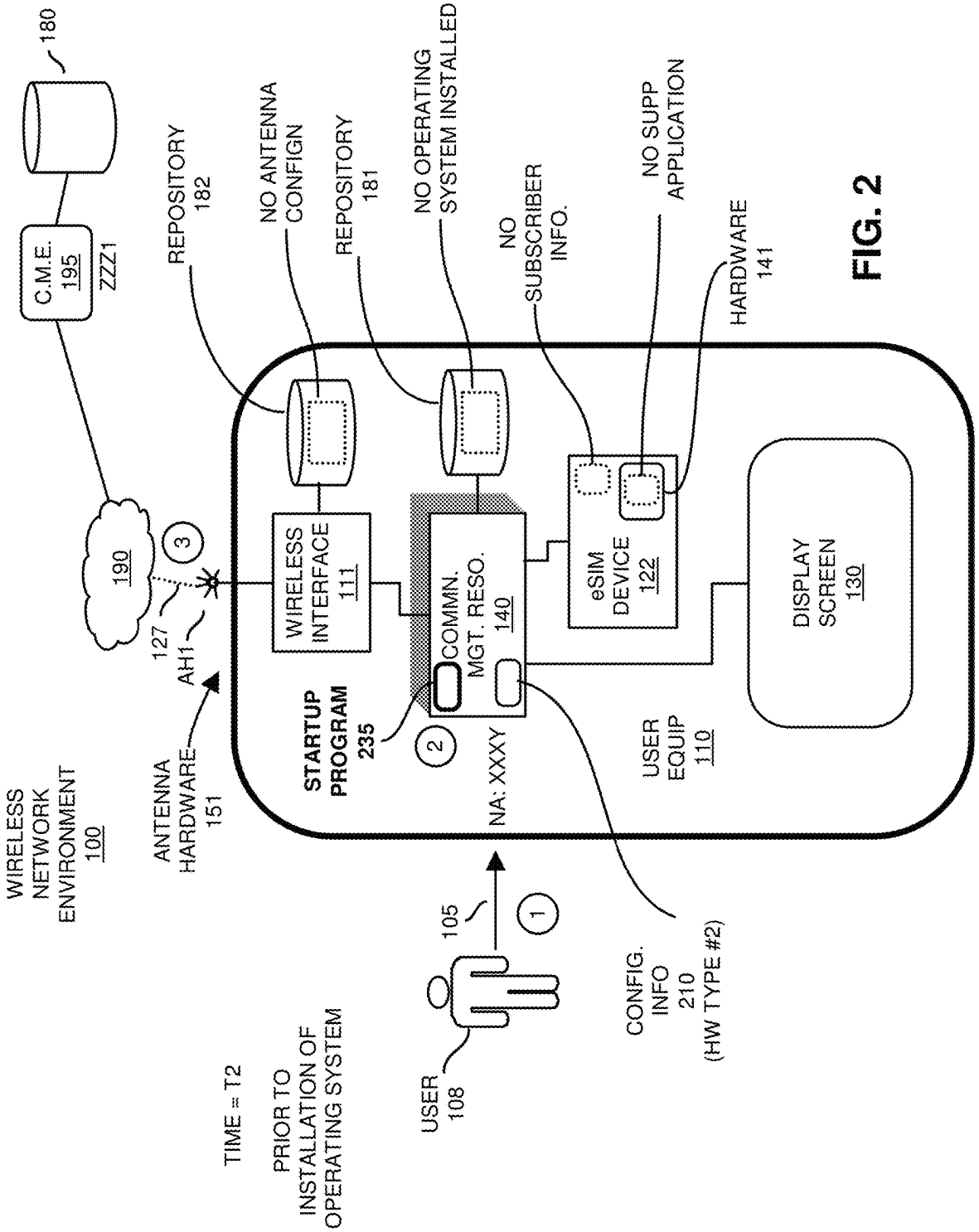
WIRELESS NETWORK ENVIRONMENT 100
ANTENNA HARDWARE 151
AH1
127
190
3
180
C.M.E. 195
ZZZ1
REPOSITORY 182
NO ANTENNA CONFIGN
REPOSITORY 181
NO OPERATING SYSTEM INSTALLED
NO SUBSCRIBER INFO.
NO SUPP APPLICATION
HARDWARE 141
WIRELESS INTERFACE 111
STARTUP PROGRAM 235
COMMN. MGT. RESO. 140
NA: XXXY
eSIM DEVICE 122
DISPLAY SCREEN 130
USER EQUIP 110
2
1
105
USER 108
CONFIG. INFO 210 (HW TYPE #2)
TIME = T2
PRIOR TO INSTALLATION OF OPERATING SYSTEM

FIG. 2

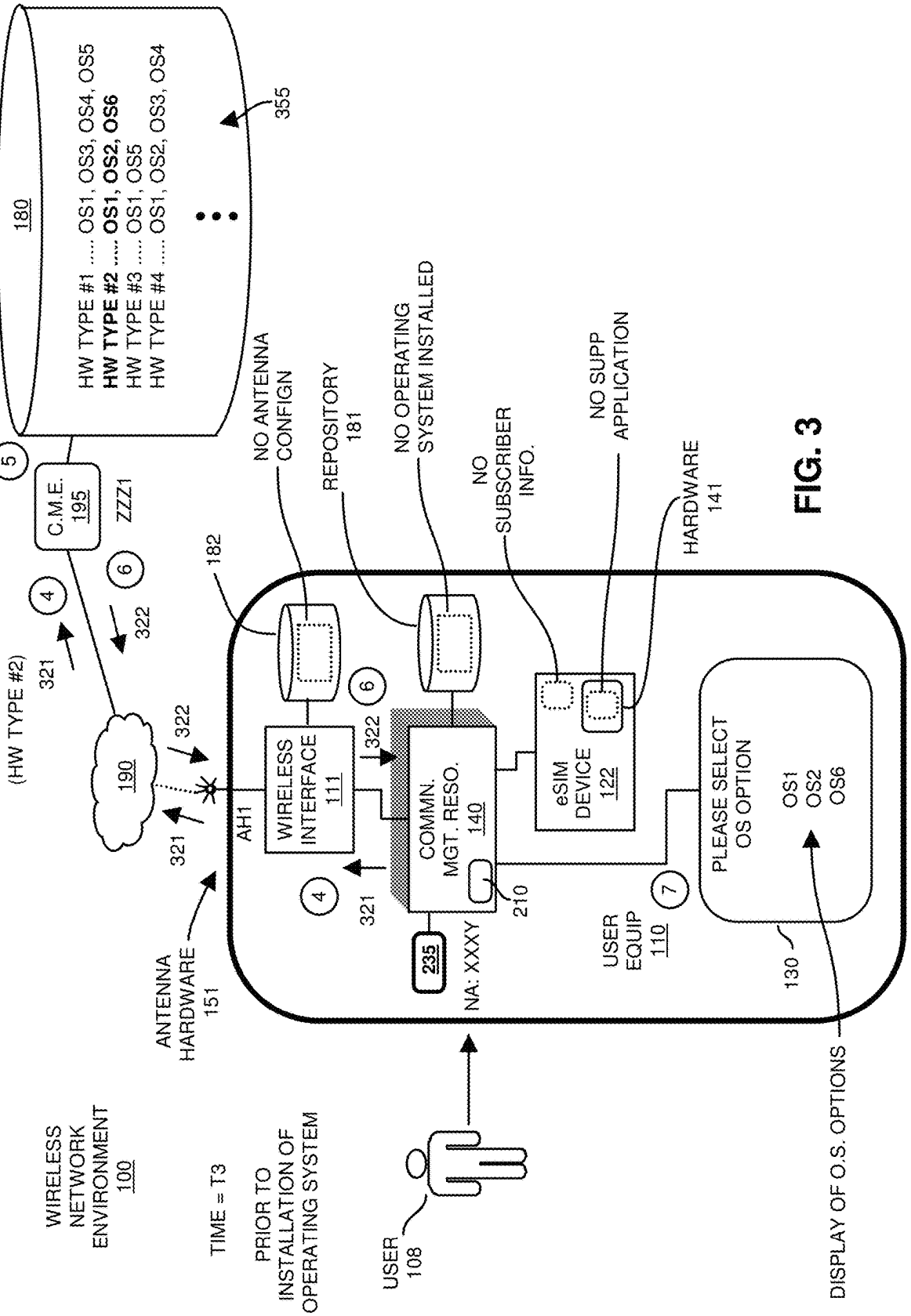
WIRELESS NETWORK ENVIRONMENT 100
TIME = T3
PRIOR TO INSTALLATION OF OPERATING SYSTEM
USER 108
ANTENNA HARDWARE 151
AH1
190
(HW TYPE #2)
321
322
C.M.E. 195
ZZZ1
180
HW TYPE #1 ..... OS1, OS3, OS4, OS5
HW TYPE #2 ..... OS1, OS2, OS6
HW TYPE #3 ..... OS1, OS5
HW TYPE #4 ..... OS1, OS2, OS3, OS4
355
182
WIRELESS INTERFACE 111
COMMN. MGT. RESO. 140
210
235
NA: XXXY
NO ANTENNA CONFIGN
REPOSITORY 181
NO OPERATING SYSTEM INSTALLED
NO SUBSCRIBER INFO.
NO SUPP APPLICATION
HARDWARE 141
eSIM DEVICE 122
USER EQUIP 110
PLEASE SELECT OS OPTION
OS1
OS2
OS6
130
DISPLAY OF O.S. OPTIONS

FIG. 3

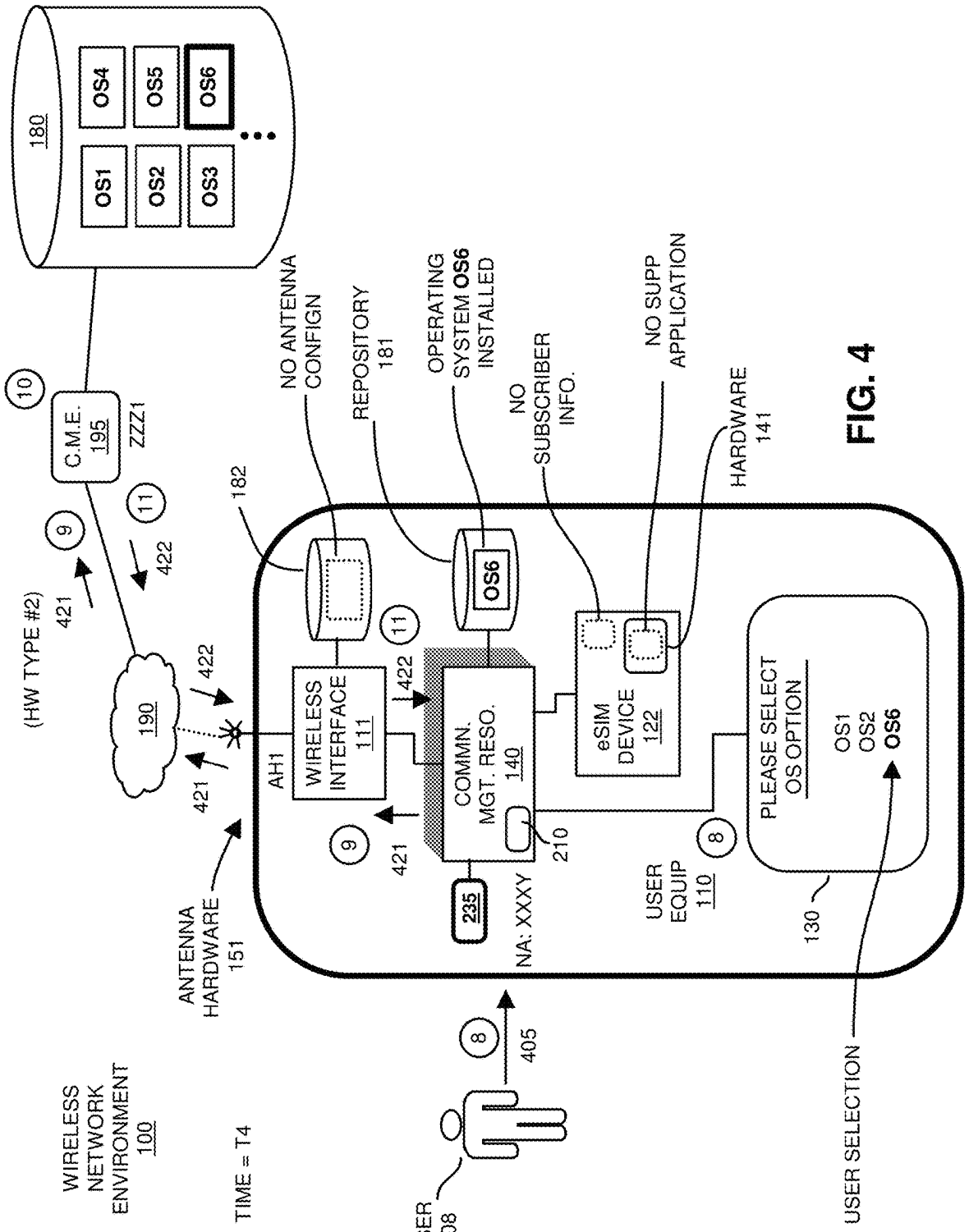
180
OS1
OS2
OS3
OS4
OS5
OS6
C.M.E. 195
ZZZ1
(HW TYPE #2)
421
422
190
ANTENNA HARDWARE 151
182
AH1
WIRELESS INTERFACE 111
NO ANTENNA CONFIGN
REPOSITORY 181
OPERATING SYSTEM OS6 INSTALLED
NO SUBSCRIBER INFO.
NO SUPP APPLICATION
HARDWARE 141
COMMN. MGT. RESO. 140
210
235
NA: XXXY
eSIM DEVICE 122
USER EQUIP 110
PLEASE SELECT OS OPTION
OS1
OS2
OS6
130
USER SELECTION
405
USER 108
TIME = T4
WIRELESS NETWORK ENVIRONMENT 100

FIG. 4

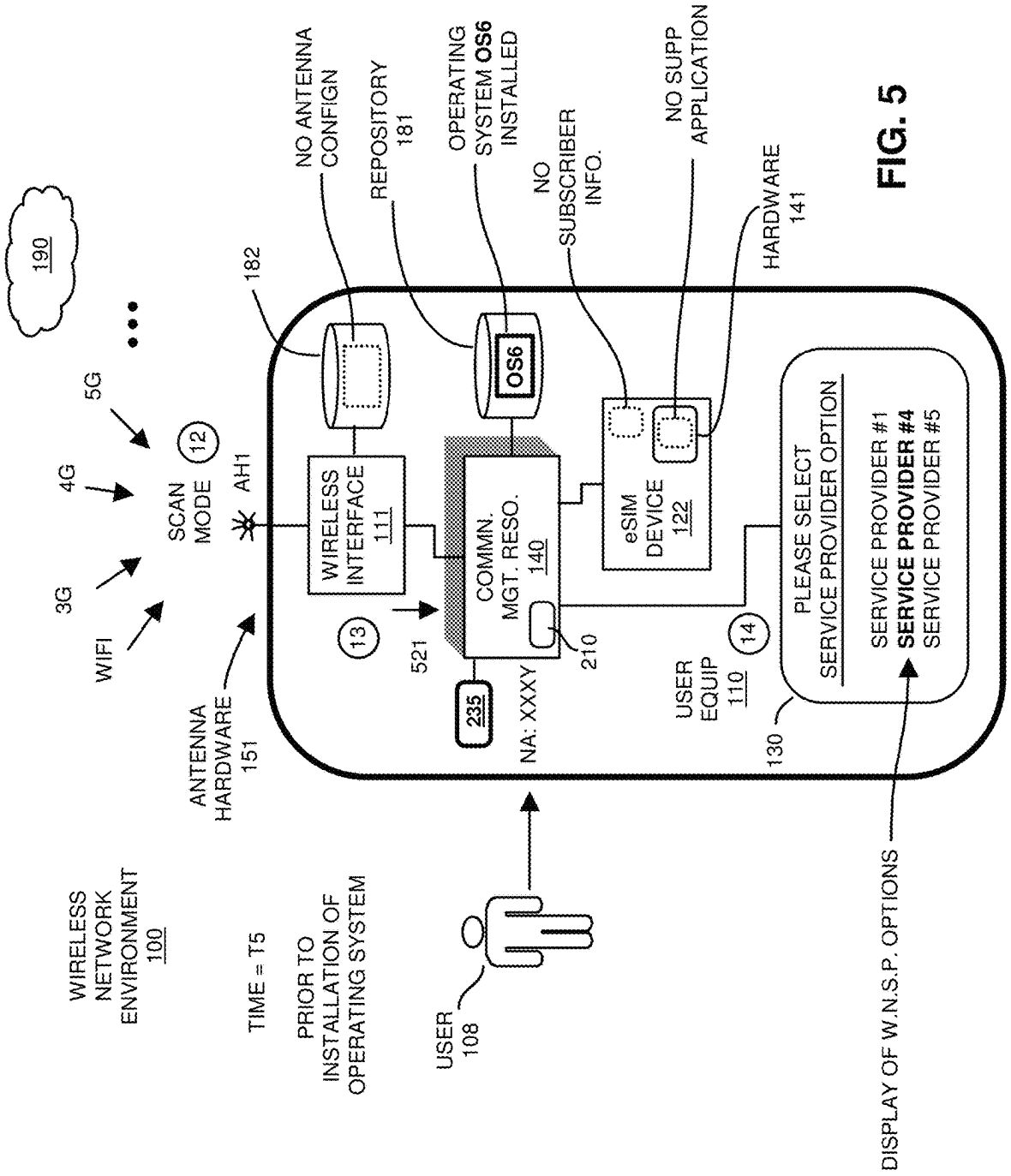
WIRELESS NETWORK ENVIRONMENT 100
TIME = T5
PRIOR TO INSTALLATION OF OPERATING SYSTEM
190
5G
4G
3G
WIFI
SCAN MODE
12
AH1
ANTENNA HARDWARE 151
182
NO ANTENNA CONFIGN
REPOSITORY 181
OPERATING SYSTEM OS6 INSTALLED
NO SUBSCRIBER INFO.
NO SUPP APPLICATION
HARDWARE 141
WIRELESS INTERFACE 111
13
521
COMMN. MGT. RESO. 140
235
NA: XXXY
210
eSIM DEVICE 122
USER EQUIP 110
14
130
PLEASE SELECT SERVICE PROVIDER OPTION
SERVICE PROVIDER #1
SERVICE PROVIDER #4
SERVICE PROVIDER #5
USER 108
DISPLAY OF W.N.S.P. OPTIONS

FIG. 5

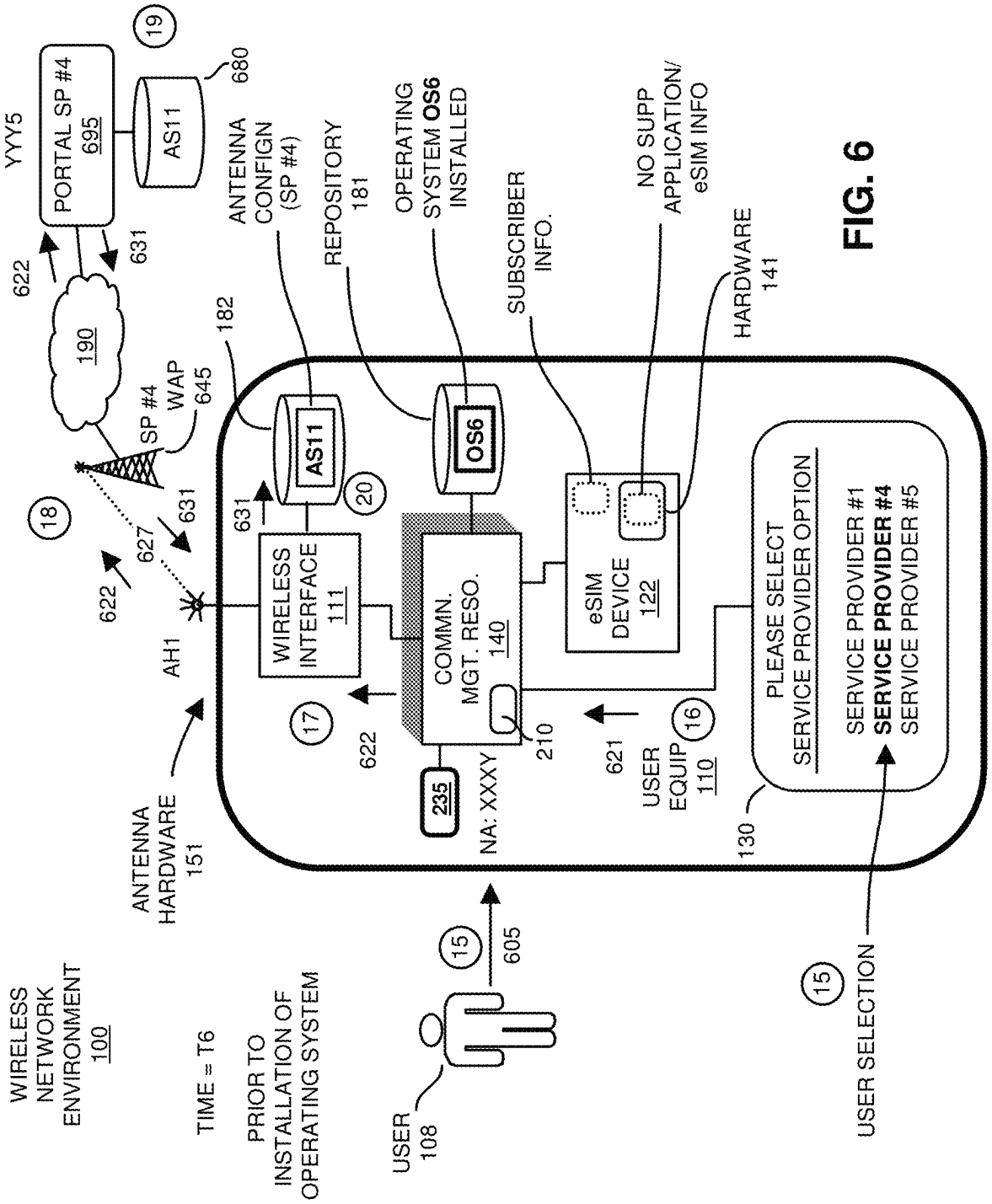
WIRELESS NETWORK ENVIRONMENT 100
TIME = T6
PRIOR TO INSTALLATION OF OPERATING SYSTEM
USER 108
ANTENNA HARDWARE 151
AH1
622
627
631
SP #4 WAP 645
182
190
622
631
YYY5
PORTAL SP #4 695
631
AS11 680
19
18
20
631
AS11
WIRELESS INTERFACE 111
17
622
COMMN. MGT. RESO. 140
210
235
NA: XXXY
621
USER EQUIP 110
16
130
ANTENNA CONFIGN (SP #4)
REPOSITORY 181
OPERATING SYSTEM OS6 INSTALLED
OS6
SUBSCRIBER INFO.
eSIM DEVICE 122
NO SUPP APPLICATION/ eSIM INFO
HARDWARE 141
PLEASE SELECT SERVICE PROVIDER OPTION
SERVICE PROVIDER #1
SERVICE PROVIDER #4
SERVICE PROVIDER #5
15
605
15
USER SELECTION

FIG. 6

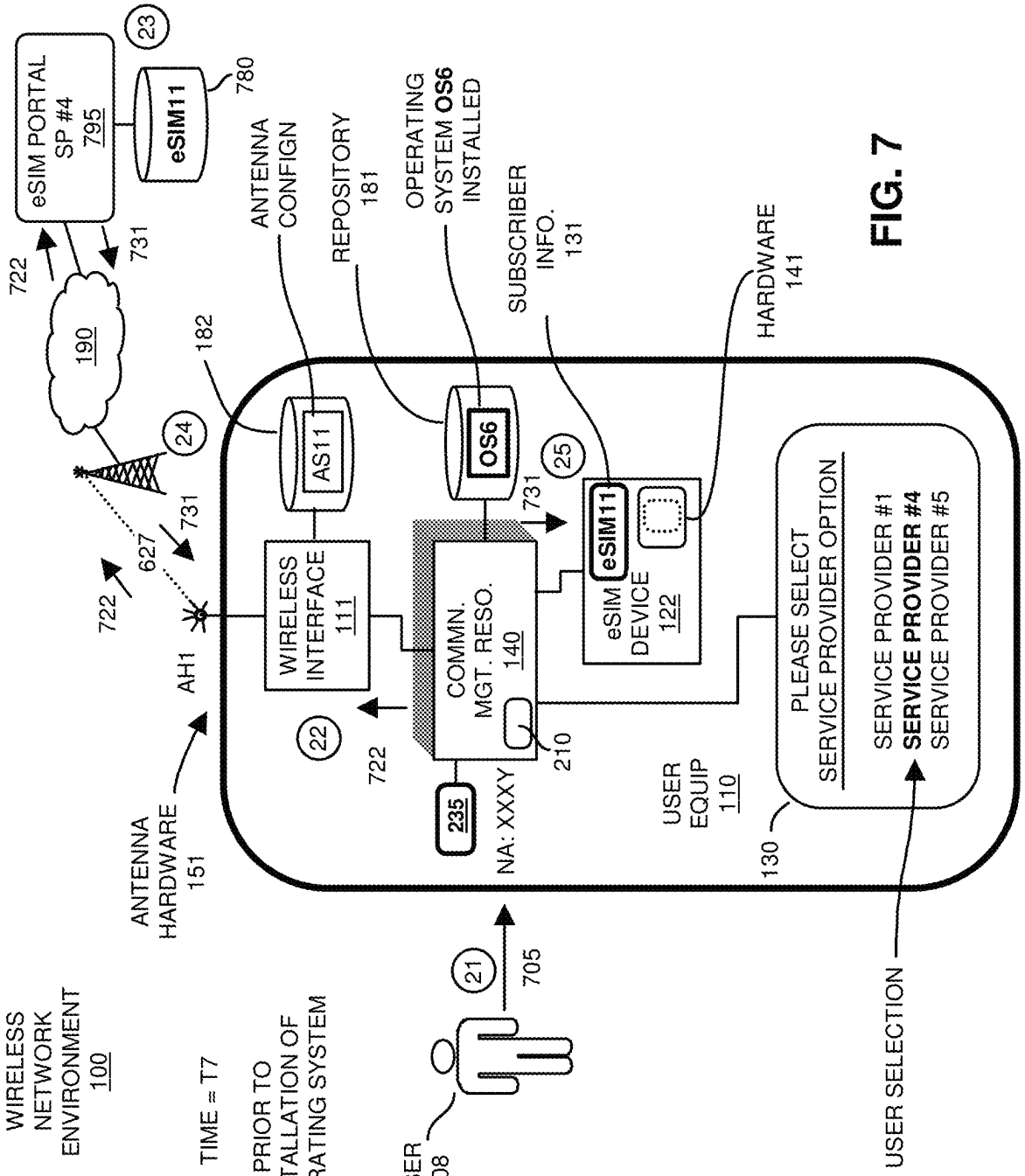
WIRELESS NETWORK ENVIRONMENT 100
TIME = T7
PRIOR TO INSTALLATION OF OPERATING SYSTEM
USER 108
21
705
ANTENNA HARDWARE 151
AH1
627
722
731
190
eSIM PORTAL SP #4 795
23
eSIM11
780
182
24
AS11
ANTENNA CONFIGN
REPOSITORY 181
OS6
OPERATING SYSTEM OS6 INSTALLED
SUBSCRIBER INFO. 131
HARDWARE 141
25
eSIM
eSIM DEVICE 122
WIRELESS INTERFACE 111
22
COMMN. MGT. RESO. 140
210
235
NA: XXXY
USER EQUIP 110
130
PLEASE SELECT SERVICE PROVIDER OPTION
SERVICE PROVIDER #1
SERVICE PROVIDER #4
SERVICE PROVIDER #5
USER SELECTION

FIG. 7

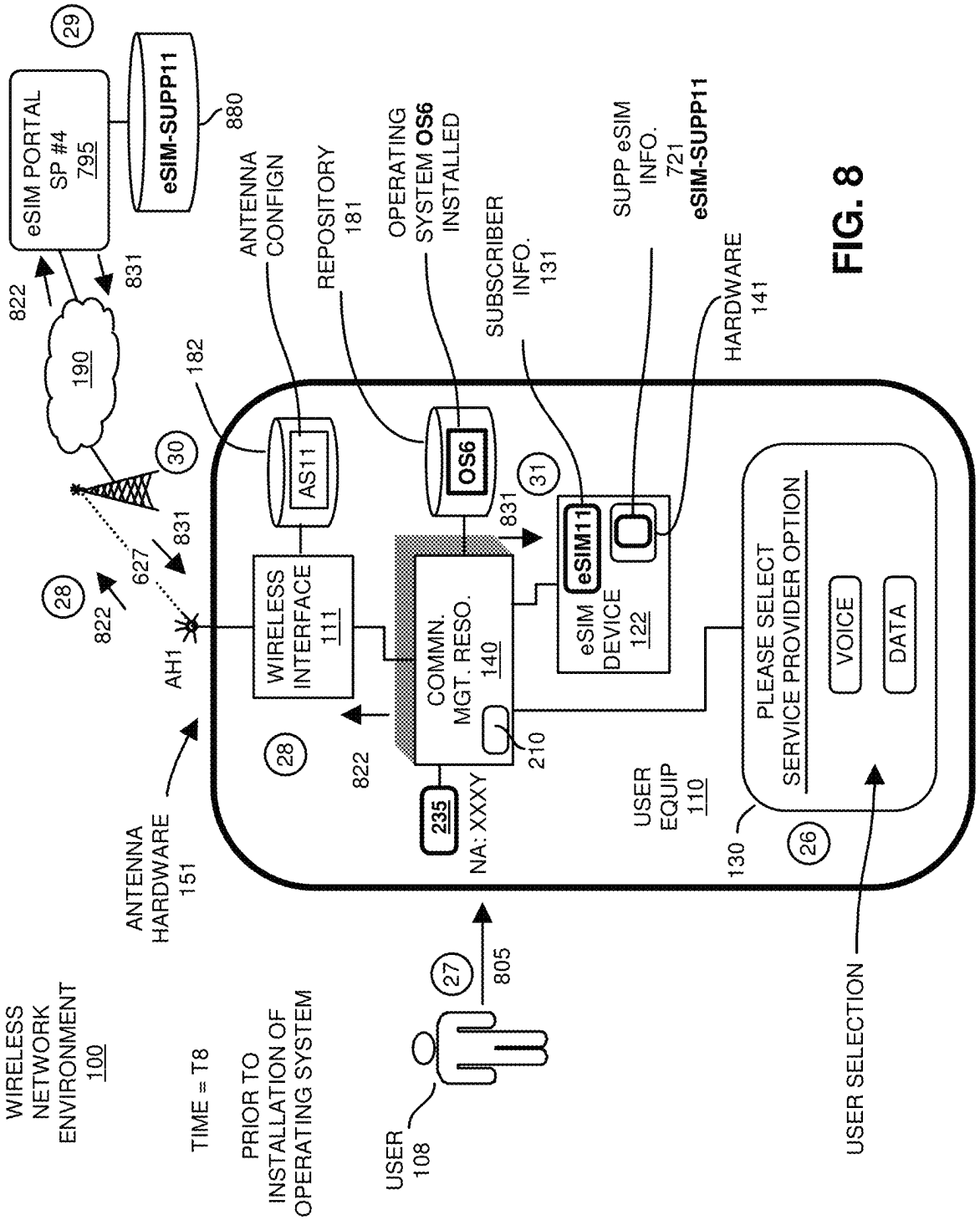
WIRELESS NETWORK ENVIRONMENT 100
TIME = T8
PRIOR TO INSTALLATION OF OPERATING SYSTEM
USER 108
27
805
ANTENNA HARDWARE 151
28
822
AH1
627
831
30
190
822
831
eSIM PORTAL SP #4 795
29
eSIM-SUPP11
880
182
ANTENNA CONFIGN
AS11
WIRELESS INTERFACE 111
REPOSITORY 181
OPERATING SYSTEM OS6 INSTALLED
OS6
COMMN. MGT. RESO. 140
210
235
NA: XXXY
831
31
SUBSCRIBER INFO. 131
eSIM11
eSIM DEVICE 122
SUPP eSIM INFO. 721 eSIM-SUPP11
HARDWARE 141
USER EQUIP 110
130
26
PLEASE SELECT SERVICE PROVIDER OPTION
VOICE
DATA
USER SELECTION

FIG. 8

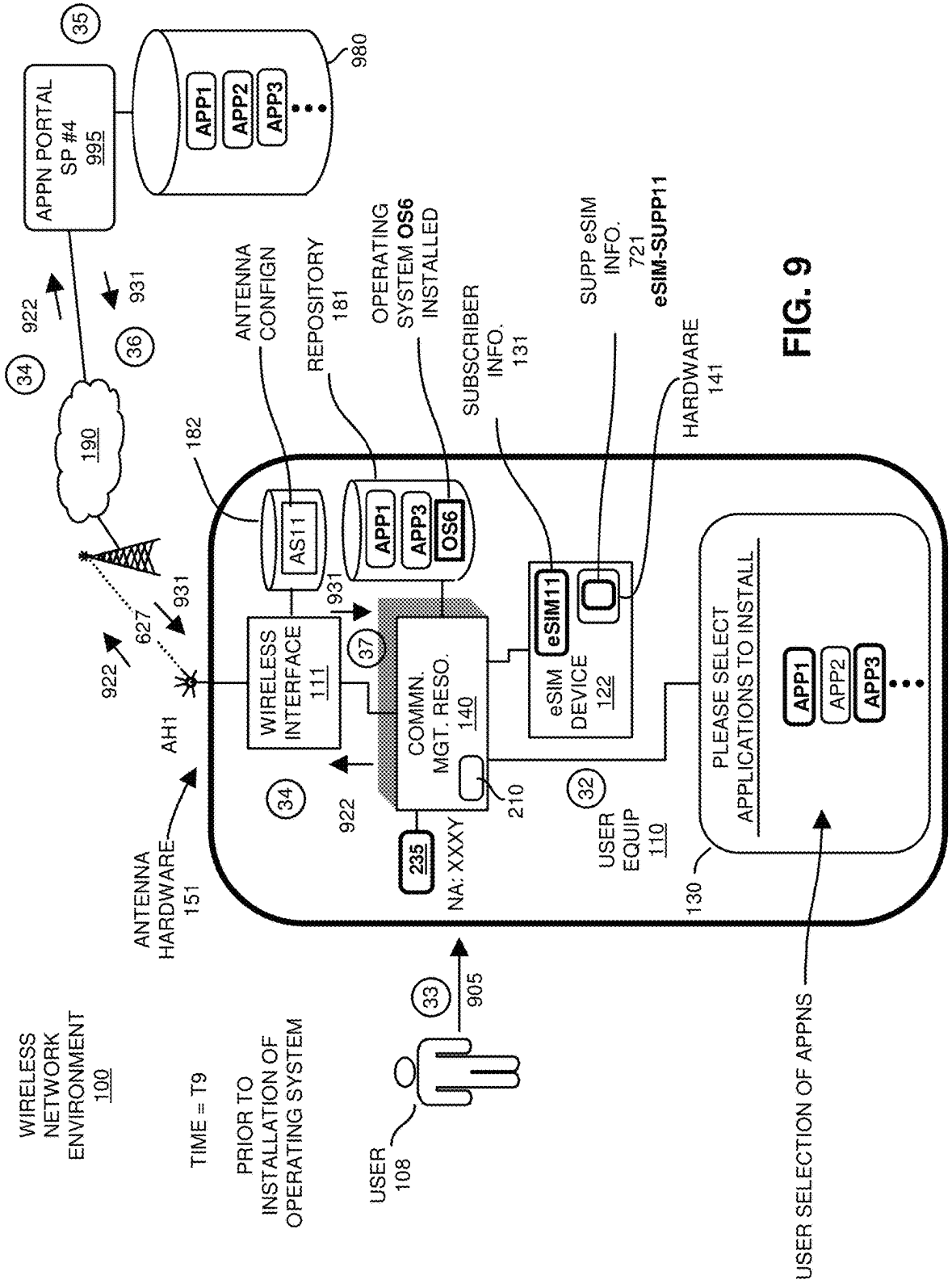
WIRELESS NETWORK ENVIRONMENT 100
TIME = T9
PRIOR TO INSTALLATION OF OPERATING SYSTEM
USER 108
33
905
ANTENNA HARDWARE 151
AH1
922
627
931
190
182
WIRELESS INTERFACE 111
AS11
931
37
34
922
COMMN. MGT. RESO. 140
210
235
NA: XXXY
APP1
APP3
OS6
eSIM11
eSIM DEVICE 122
32
USER EQUIP 110
130
PLEASE SELECT APPLICATIONS TO INSTALL
APP1
APP2
APP3
USER SELECTION OF APPNS
ANTENNA CONFIGN
REPOSITORY 181
OPERATING SYSTEM OS6 INSTALLED
SUBSCRIBER INFO. 131
SUPP eSIM INFO. 721 eSIM-SUPP11
HARDWARE 141
APPN PORTAL SP #4 995
35
980
APP1
APP2
APP3
36
931
34
922

FIG. 9

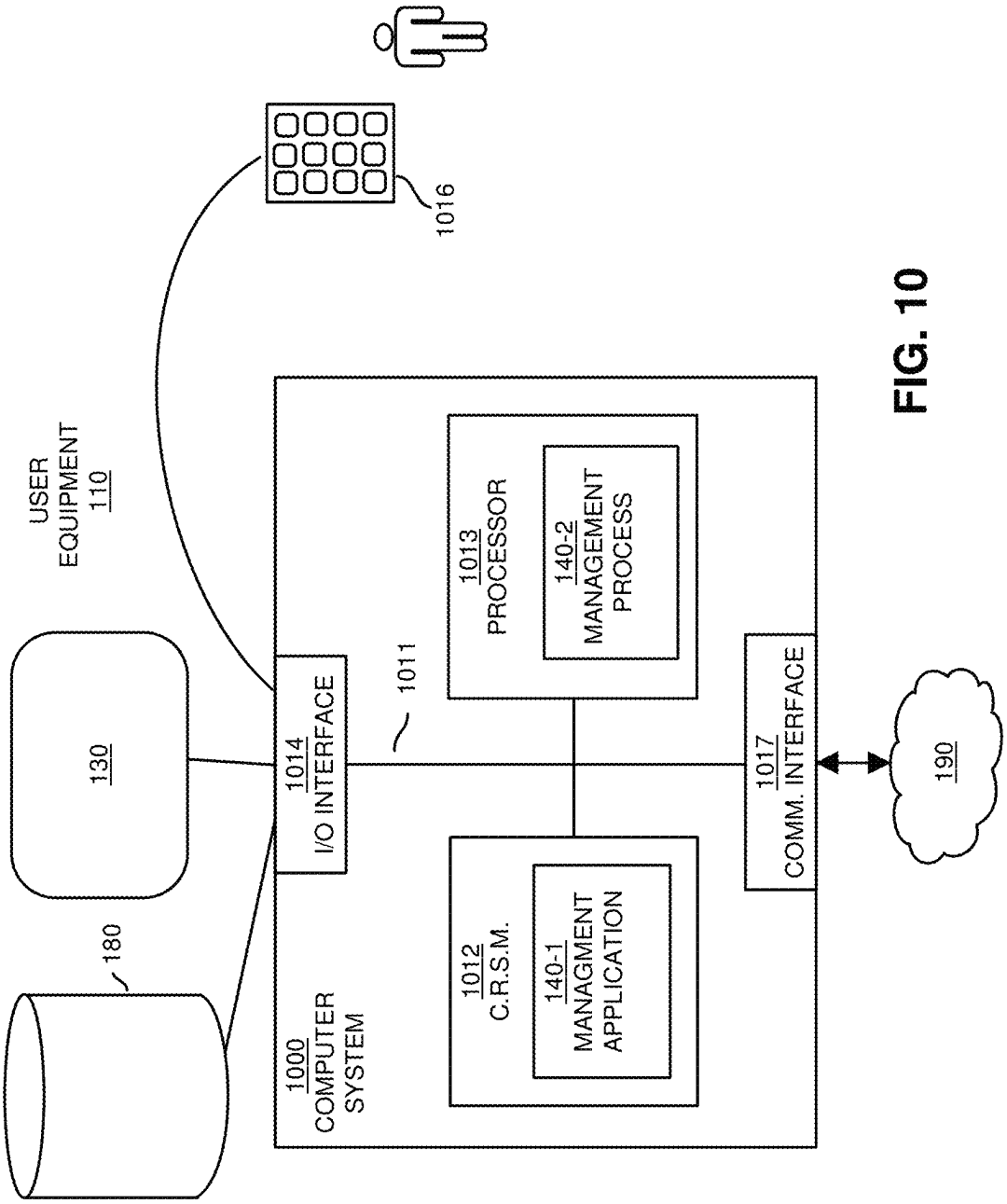
USER EQUIPMENT 110
1016
130
180
1000 COMPUTER SYSTEM
1014 I/O INTERFACE
1011
1012 C.R.S.M.
140-1 MANAGMENT APPLICATION
1013 PROCESSOR
140-2 MANAGEMENT PROCESS
1017 COMM. INTERFACE
190

FIG. 10

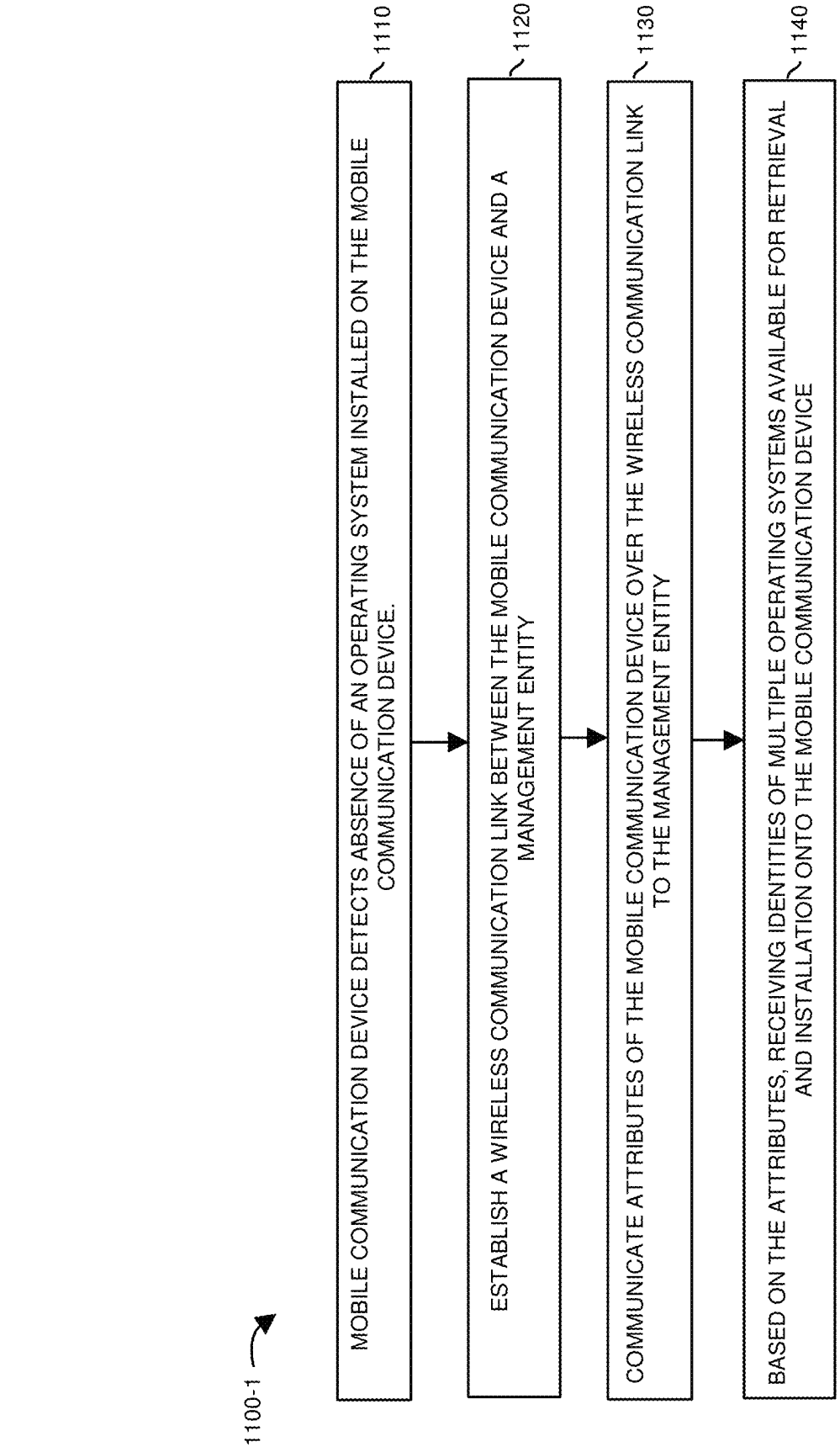
1100-1
1110
MOBILE COMMUNICATION DEVICE DETECTS ABSENCE OF AN OPERATING SYSTEM INSTALLED ON THE MOBILE COMMUNICATION DEVICE.
1120
ESTABLISH A WIRELESS COMMUNICATION LINK BETWEEN THE MOBILE COMMUNICATION DEVICE AND A MANAGEMENT ENTITY
1130
COMMUNICATE ATTRIBUTES OF THE MOBILE COMMUNICATION DEVICE OVER THE WIRELESS COMMUNICATION LINK TO THE MANAGEMENT ENTITY
1140
BASED ON THE ATTRIBUTES, RECEIVING IDENTITIES OF MULTIPLE OPERATING SYSTEMS AVAILABLE FOR RETRIEVAL AND INSTALLATION ONTO THE MOBILE COMMUNICATION DEVICE

FIG. 11

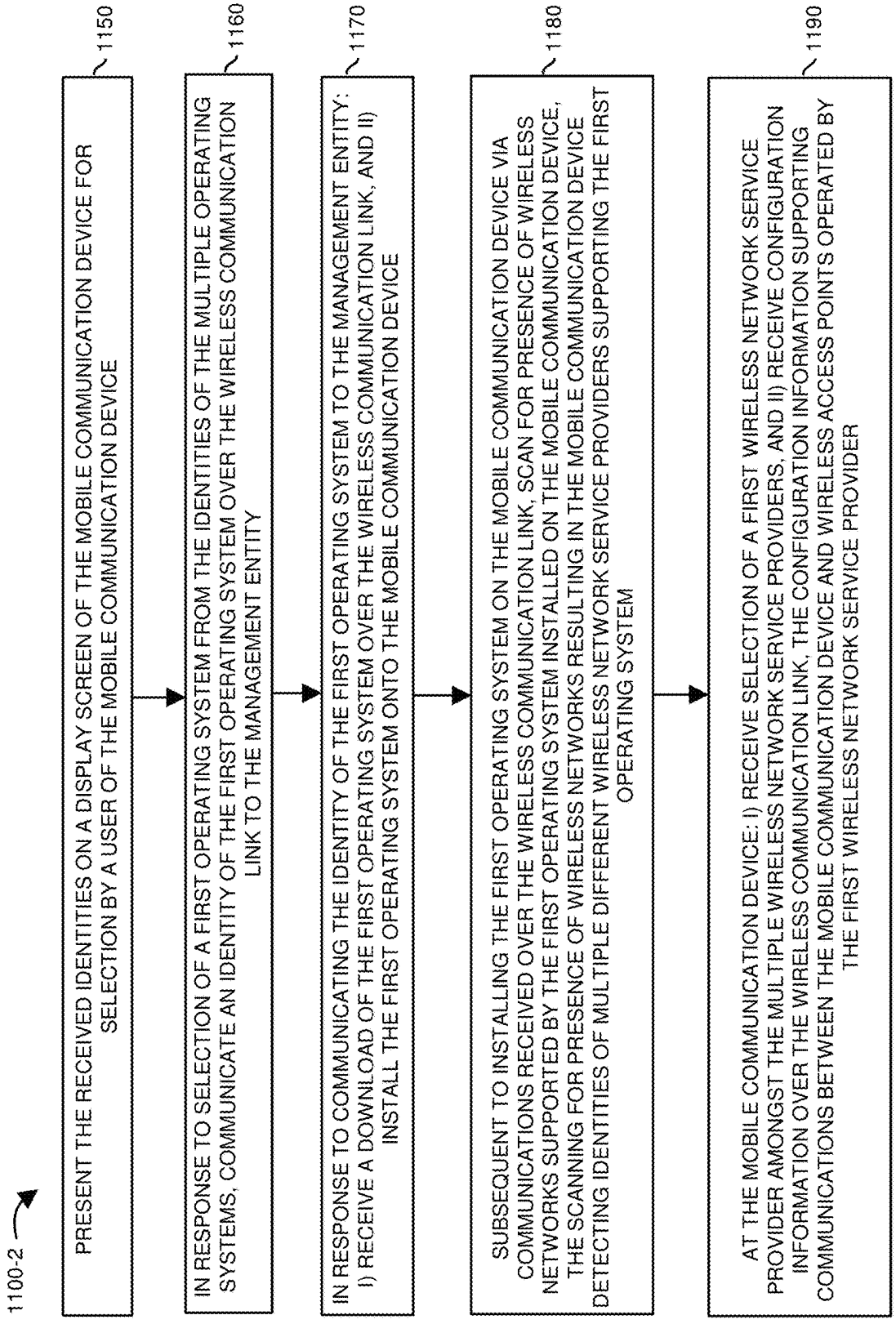
1100-2
PRESENT THE RECEIVED IDENTITIES ON A DISPLAY SCREEN OF THE MOBILE COMMUNICATION DEVICE FOR SELECTION BY A USER OF THE MOBILE COMMUNICATION DEVICE
1150
IN RESPONSE TO SELECTION OF A FIRST OPERATING SYSTEM FROM THE IDENTITIES OF THE MULTIPLE OPERATING SYSTEMS, COMMUNICATE AN IDENTITY OF THE FIRST OPERATING SYSTEM OVER THE WIRELESS COMMUNICATION LINK TO THE MANAGEMENT ENTITY
1160
IN RESPONSE TO COMMUNICATING THE IDENTITY OF THE FIRST OPERATING SYSTEM TO THE MANAGEMENT ENTITY: I) RECEIVE A DOWNLOAD OF THE FIRST OPERATING SYSTEM OVER THE WIRELESS COMMUNICATION LINK, AND II) INSTALL THE FIRST OPERATING SYSTEM ONTO THE MOBILE COMMUNICATION DEVICE
1170
SUBSEQUENT TO INSTALLING THE FIRST OPERATING SYSTEM ON THE MOBILE COMMUNICATION DEVICE VIA COMMUNICATIONS RECEIVED OVER THE WIRELESS COMMUNICATION LINK, SCAN FOR PRESENCE OF WIRELESS NETWORKS SUPPORTED BY THE FIRST OPERATING SYSTEM INSTALLED ON THE MOBILE COMMUNICATION DEVICE, THE SCANNING FOR PRESENCE OF WIRELESS NETWORKS RESULTING IN THE MOBILE COMMUNICATION DEVICE DETECTING IDENTITIES OF MULTIPLE DIFFERENT WIRELESS NETWORK SERVICE PROVIDERS SUPPORTING THE FIRST OPERATING SYSTEM
1180
AT THE MOBILE COMMUNICATION DEVICE: I) RECEIVE SELECTION OF A FIRST WIRELESS NETWORK SERVICE PROVIDER AMONGST THE MULTIPLE WIRELESS NETWORK SERVICE PROVIDERS, AND II) RECEIVE CONFIGURATION INFORMATION OVER THE WIRELESS COMMUNICATION LINK, THE CONFIGURATION INFORMATION SUPPORTING COMMUNICATIONS BETWEEN THE MOBILE COMMUNICATION DEVICE AND WIRELESS ACCESS POINTS OPERATED BY THE FIRST WIRELESS NETWORK SERVICE PROVIDER
1190

FIG. 12

CUSTOMIZATION OF NON-CONFIGURED USER EQUIPMENT

BACKGROUND

There are many different types of mobile communication devices available from different manufacturers. Each manufacturer requires installation of their own operating system on a respective mobile communication device to support functionality of that manufacturer's mobile communication device.

In addition to requiring implementation of an appropriate operating system, a mobile communication device also needs to be configured with subscriber identity module information. A subscriber identity module or subscriber identification module (SIM), also known a SIM card or SIM information, is an integrated circuit that is used to securely store information such as the international mobile subscriber identity (IMSI) telephony number and its related key information. Such information is used to identify and authenticate subscribers of mobile communication devices when they attempt to use a respective wireless network operated by a service provider associated with the SIM information.

Conventional SIM information typically includes subscriber information such as a unique serial number (ICCID), international mobile subscriber identity (IMSI) number, security authentication and ciphering information, temporary information related to the local network, a list of the services the user has access to, and two passwords such as a personal identification number (PIN) for ordinary use, and a personal unblocking key (PUK) for PIN unlocking.

It may be noted that newer technology supports so-called embedded SIM information. An embedded-SIM (eSIM) or embedded universal integrated circuit card (eUICC) is a form of programmable SIM card that is embedded directly into a mobile communication device.

BRIEF DESCRIPTION OF EMBODIMENTS

This disclosure includes the observation that there are deficiencies associated with conventional mobile communication devices. For example, as previously discussed, operation of a mobile communication device requires installation of a corresponding manufacturer's operating system. That is, an Apple™ mobile communication device must execute an Apple™ operating system; a Samsung™ mobile communication device must execute a Samsung™ operating system; and so on. Mobile communication devices configured to support only a single specific operating system lack flexibility because a respective user may prefer one manufacturer's operating system over another.

It is further observed that different manufacturer's mobile communication devices typically include similar functionality such as a microphone to detect sound, a speaker to output sound, buttons to control sound or power, a display screen, etc. As further discussed herein, a proposed unique mobile communication device supports installation and execution of multiple different operating systems as well as unique configuration of a respective mobile communication device. In other words, the mobile communication device supports execution of any of multiple different operating systems from multiple different corresponding vendors/manufacturers.

More specifically, as discussed herein, a non-configured mobile communication device establishes a wireless communication link between the mobile communication device and a remote management entity. The communication device

communicates attributes of the mobile communication device over the wireless communication link to the management entity. Based on the attributes, the mobile communication device receives identities of multiple operating systems available for retrieval and installation onto the mobile communication device.

In accordance with one example, the mobile communication device communicates the attributes of the mobile communication device over the wireless communication link to the remote management entity in response to detecting absence of an operating system installed on the mobile communication device or a desire to change a current operating system installed on the mobile communication device. Additionally, or alternatively, the mobile communication device can be configured to communicate the attributes in response to a user of the mobile communication device attempting to configure or re-configure it.

In accordance with further examples, the communication management resource of the mobile communication device can be configured to present (display) the received identities on a display screen of the mobile communication device for selection by a user of the mobile communication device.

Yet further, as discussed herein, in response to selection of a first operating system from the identities of the displayed multiple operating systems, the communication management hardware associated with the mobile communication device communicates an identity of the selected first operating system over the wireless communication link to the remote configuration management entity. In response to communicating the identity of the selected first operating system to the management entity, the communication management hardware receives a download of the first operating system over the wireless communication link from the configuration management entity or other suitable entity. The communication management hardware installs the first operating system onto the mobile communication device for subsequent execution.

In still further examples, subsequent to installation of a first operating system on the mobile communication device via communications received over the wireless communication link, the mobile communication device scans for presence (availability) of one or more wireless networks supported by the first operating system installed on the mobile communication device. In one instance, scanning for presence of wireless networks results in the mobile communication device detecting identities of multiple different wireless network service providers supporting the first operating system.

Yet further, the mobile communication device can be configured to receive selection of a first wireless network service provider amongst the multiple available wireless network service providers detected in an area. The communication management hardware of the mobile communication device communicates the selection of the wireless network service provider over the wireless communication link to the remote management entity or other suitable entity. In response to communicating the selection, the communication management hardware receives configuration information over the wireless communication link. The configuration information supports communications between the mobile communication device and wireless access points operated by the selected first wireless network service provider.

In accordance with further examples, the configuration information can be configured to include subscriber identity information (such as SIM information) for installation on the mobile communication device. Installation of the subscriber

identity information (such as SIM information) on the mobile communication device supports wireless connectivity of the mobile communication device to one or more wireless access points operated by the selected first wireless network service provider.

Yet further, the configuration information may include antenna settings for application to antenna hardware of the mobile communication device. Installation and subsequent implementation of the antenna settings on the mobile communication device supports wireless connectivity of the antenna hardware of the mobile communication device to the wireless access points operated by the first wireless network service provider.

Note further that, subsequent to selection of a first operating system from the identities and installation of the first operating system onto the mobile communication device, the mobile communication device can be configured to receive a first command from the user. Assume that the first command indicates to remove the first operating system from the mobile communication device. In response to receiving the first command, the mobile communication device removes the first operating system from the mobile communication device. In response to selection of a second operating system from the identities of multiple available operating systems, the mobile communication device receives a download of the second operating system at the mobile communication device. The communication management hardware of the mobile communication device installs the second operating system onto the mobile communication device.

Accordingly, techniques herein are useful over conventional techniques. For example, embodiments herein provide a unique way to install one of multiple different operating system to operate a respective mobile communication device. More specifically, examples as discussed herein enable a respective user to initially configure a new mobile communication device and potentially reconfigure the mobile communication device if they wish to switchover to use of a different operating system and or different wireless network service provider. In other words, the mobile communication device from a single manufacturer can be configured for use on multiple different wireless networks.

Note that any of the resources as discussed herein can include one or more computerized devices, user equipment, wireless communication devices, gateway resources, mobile communication devices, sensors, servers, base stations, wireless communication equipment, communication management systems, controllers, workstations, user equipment, handheld or laptop computers, or the like to carry out and/or support any or all of the method operations disclosed herein. In other words, one or more computerized devices or processors can be programmed and/or configured to operate as explained herein to carry out the different embodiments as described herein.

Yet other examples herein include software programs to perform the steps and/or operations summarized above and disclosed in detail below. One such embodiment comprises a computer program product including a non-transitory computer-readable storage medium or any computer readable storage hardware on which software instructions are encoded/stored for subsequent execution. The instructions, when executed in a computerized device (hardware) having a processor, program and/or cause the processor (hardware) to perform the operations disclosed herein. Such arrangements are typically provided as software, code, instructions, and/or other data (e.g., data structures) arranged or encoded on a non-transitory computer readable storage medium or any computer readable storage hardware such as an optical medium (e.g., CD-ROM), floppy disk, hard disk, memory stick, memory device, etc., or other a medium such as firmware in one or more ROM, RAM, PROM, etc., or as an Application Specific Integrated Circuit (ASIC), etc. The software or firmware or other such configurations can be installed onto a computerized device to cause the computerized device to perform the techniques explained herein.

Accordingly, embodiments herein are directed to a method, system, computer program product, etc., that supports operations as discussed herein.

One example as discussed herein includes a computer readable storage medium and/or computer-readable storage hardware having instructions stored thereon to support wireless communications using eSIM information. The instructions, when executed by the computer processor hardware, cause the computer processor hardware (such as one or more co-located or disparately processor devices or hardware) to: establish a wireless communication link between a mobile communication device and a remote management entity; communicate attributes of the mobile communication device over the wireless communication link to the remote management entity; and in response to communicating the attributes, receive identities of multiple operating systems available for retrieval and installation onto the mobile communication device.

The ordering of the steps above has been added for clarity sake. Note that any of the processing steps as discussed herein can be performed in any suitable order.

Other embodiments of the present disclosure include software programs and/or respective hardware to perform any of the method embodiment steps and operations summarized above and disclosed in detail below.

It is to be understood that the system, method, apparatus, instructions on computer readable storage media, etc., as discussed herein also can be embodied strictly as a software program, firmware, as a hybrid of software, hardware and/or firmware, or as hardware alone such as within a processor (hardware or software), or within an operating system or a within a software application.

As discussed herein, techniques herein are well suited for use in the field of supporting configuration of mobile communication devices in a wireless network environment. However, it should be noted that embodiments herein are not limited to use in such applications and that the techniques discussed herein are well suited for other applications as well.

Additionally, note that although each of the different features, techniques, configurations, etc., herein may be discussed in different places of this disclosure, it is intended, where suitable, that each of the concepts can optionally be executed independently of each other or in combination with each other. Accordingly, the one or more present inventions as described herein can be embodied and viewed in many different ways.

Also, note that this preliminary discussion of embodiments herein (BRIEF DESCRIPTION OF EMBODIMENTS) purposefully does not specify every embodiment and/or incrementally novel aspect of the present disclosure or claimed invention(s). Instead, this brief description only presents general embodiments and corresponding points of novelty over conventional techniques. For additional details and/or possible perspectives (permutations) of the invention (s), the reader is directed to the Detailed Description section

(which is a summary of embodiments) and corresponding figures of the present disclosure as further discussed below.

BRIEF DESCRIPTION OF THE DRAWINGS

FIG. **1** is an example diagram illustrating user equipment supporting novel configuration of a mobile phone communication device (user equipment) as discussed herein.

FIG. **2** is an example diagram illustrating implementation of an initializer program to configure a respective new, non-configured mobile communication device as discussed herein.

FIG. **3** is an example diagram illustrating display of selectable operating systems for download and installation on a mobile communication device as discussed herein.

FIG. **4** is an example diagram illustrating selection, downloading, and installation of an operating system on a mobile communication device as discussed herein.

FIG. **5** is an example diagram illustrating scanning of wireless networks to learn of available wireless services and corresponding wireless network service providers as described herein.

FIG. **6** is an example diagram illustrating display of identities of available wireless network service providers and selection of a respective service provider to support wireless connectivity with a wireless network as described herein.

FIG. **7** is an example diagram illustrating retrieval and installation of a respective eSIM onto a mobile communication device to support wireless connectivity as described herein.

FIG. **8** is an example diagram illustrating selection of different wireless services for a selected wireless network service provider as described herein.

FIG. **9** is an example diagram illustrating display of available applications for installation and download to a corresponding mobile communication device as described herein.

FIG. **10** is an example diagram illustrating example computer architecture operable to execute one or more operations according to embodiments herein.

FIGS. **11** and **12** are example diagrams illustrating a method according to embodiments herein.

The foregoing and other objects, features, and advantages of the invention(s) will be apparent from the following more particular description of preferred embodiments herein, as illustrated in the accompanying drawings in which like reference characters refer to the same parts throughout the different views. The drawings are not necessarily to scale, with emphasis instead being placed upon illustrating the embodiments, principles, concepts, etc.

DETAILED DESCRIPTION

Communication management hardware of a mobile communication device establishes a wireless communication link between the mobile communication device and a remote management entity. The wireless communication link may be established by the mobile communication device in response to detecting absence of an operating system installed on the mobile communication device and/or one or more other conditions such as a user powering a respective mobile communication device, input of a command to the mobile communication device to configure or re-configure the mobile communication device, and so on. In furtherance of configuring the mobile communication device, the communication device communicates attributes (such as one or more of manufacturer, model, version, etc.) of the mobile communication device over the wireless communication link to the management entity. Based on the received attributes, the mobile communication device receives identities of multiple operating systems available for retrieval and installation onto the mobile communication device.

The user of the mobile communication device or other suitable entity selects an appropriate operating system for installation.

Now, more specifically, FIG. **1** is an example diagram illustrating user equipment supporting novel configuration of a mobile communication device (user equipment) as discussed herein.

As shown in this example, the wireless network environment **100** includes user equipment **110** operated by user **108**. The user equipment **110** (such as a mobile communication device, mobile phone device, etc.) as shown in FIG. **1** may be a new device that has not yet been configured with a respective operating system to execute applications and support different functions associated with the user equipment **110**. The user equipment **110** as shown in FIG. **1** may be a new device that has not yet been configured with any applications, SIM information supporting wireless connectivity for a particular wireless network service provider, antenna hardware configuration information to support wireless connectivity with a selected wireless network service provider, and so on.

Further in this example, user equipment **110** includes wireless interface **111** associated with antenna hardware AH**1**, communication management resource **140**, eSIM device **122** for storing SIM (Subscriber Identity Module) information, and display screen **130**.

Repository **181** is present on the user equipment **110** to store a respective operating system selected by the user **108** or other suitable entity. Repository **182** is present on the user equipment **110** to store configuration information associated with the antenna hardware **151** such as including one or more of antenna hardware AH**1** and corresponding wireless interface **111**.

In this example, the eSIM device **122** (or alternatively standard SIM hardware supporting insertion of a physical SIM card) includes programmable hardware **141** to execute one or more supplemental applications (not yet installed in hardware **141** of FIG. **1**) associated with the subscriber identity module information. In other words, the eSIM device **122** can be configured to support download and execution of one or more supplemental applications associated with the SIM functionality supported by the eSIM device **122**.

Note that each of the different components as discussed herein such as communication management resource **140**, wireless interface **111**, eSIM device **122** (resource), mobile communication device such as user equipment **110**, etc., can be implemented via hardware, software, or a combination of both hardware and software.

More specifically, communication management resource **140** can be configured to include communication management hardware, communication management software, or a combination of communication manager hardware and communication management software; wireless interface **111** can be configured to include wireless interface hardware, wireless interface software, or a combination of wireless interface hardware and wireless interface software; eSIM resource (such as eSIM device **122**) can be configured to include communication management hardware, communi-

cation management software, or a combination of communication manager hardware and communication management software; and so on.

As further shown, the user equipment **110** (such as a new phone device) at or around time T**1** has not yet been configured with appropriate information to support connectivity with a respective wireless network. For example, the user equipment **110** has not yet been configured with an appropriate operating system stored in repository **181**; the user equipment **110** has not yet been configured with appropriate antenna configuration information stored in repository **182**; the user equipment **110** has not yet been configured with appropriate subscriber identity module information in a respective repository of eSIM device **122**; and so on. The following drawings and text describe how a respective user configures the user equipment **110**.

FIG. **2** is an example diagram illustrating implementation of an initializer program (startup program) to configure a respective new mobile communication device as discussed herein.

At or around time T**2**, the user **108** receives the user equipment **110**, which is in a new, non-configured state. For example, the user equipment **110** has not yet been configured with an operating system, SIM information, application information, etc., as previously discussed.

In order to configure the corresponding user equipment **110**, in processing operation #**1**, the user **108** provides input **105** (such as credentials including username and password or other input) to the user equipment **110**. The input **105** may include powering up of the corresponding user equipment **110** (a.k.a., mobile communication device). In one example, powering up of the user equipment **110** in the non-configured state causes the communication management resource **140** to initiate execution of the startup program **235** in processing operation #**2**. Additionally, or alternatively, receipt of a command (via input **105**) from the user **108** indicating to configure the user equipment **110** results in activation of the corresponding startup program **235** (such as an initializer program) associated with the communication management resource **140** in processing operation #**2**.

The executed startup program **235** supports basic functions enabling the corresponding user equipment **110** to be configured prior to installation of a respective operating system in repository **181**. In other words, because the user equipment **110** has not yet been configured with a corresponding operating system stored in the repository **181**, the executed startup program **235** (in accordance with input **105**) enables the user equipment **110** to perform basic functions (establishment of a wireless communication link, communications of commands/requests, retrieval of data, and so on) as further discussed herein.

As further shown, in processing operation #**3**, in response to execution of the starter program **235**, and potentially the user **108** providing input requesting configuration of the user equipment **110**, the communication management resource **140** controls operation of the wireless interface **111** to establish a corresponding wireless communication link **127** between the antenna hardware AH**1** of the user equipment **110** and a corresponding wireless access point in the network **190**.

Note that the wireless communication link **127** can be established in support wireless communications in accordance with any suitable wireless communication protocol such as Wi-Fi™, Long Term Evolution, 3G, 4G, 5G, . . . , New Radio, and so on. Because there is no SIM information installed in eSIM device **122**, the user equipment **110** may establish the corresponding wireless communication link **127** and corresponding connectivity with the wireless network and wireless access point via Wi-Fi™.

In this example, the user equipment **110** is assigned network address XXXY; the communication management entity **195** is assigned network address ZZZ**1** for routing of communications.

As further discussed herein, via communications (source network address=XXXY and destination=ZZZ**1**) over the wireless communication link **127** from the antenna hardware AH**1** of the user equipment **110**, the communication management resource **140** communicates and establishes connectivity with the communication management entity **195** such as a server resource. Accordingly, examples herein include establishing a wireless communication link **127** between the user equipment **110** (mobile communication device) and a management entity **195** to configure user equipment **110**.

In this example, the communication management entity **195** manages distribution of operating systems for use by each of multiple mobile communication devices in the network environment **100** when requested by those corresponding communication devices.

FIG. **3** is an example diagram illustrating display of selectable operating systems for download and installation on a mobile communication device as discussed herein.

In processing operation #**4**, in furtherance of configuring the user equipment **110** as requested by the user **108**, the communication management resource **140** retrieves attributes such as configuration information **210** (including information such as attributes of the user equipment **110** being HARDWARE-TYPE #**2**). In this example, the information HARDWARE-TYPE #**2** (a.k.a., HW-TYPE #**2**) communicated in communications **321** can be configured to indicate any information such as a manufacturer of the user equipment **110**, model of the user equipment **110**, version of the user equipment **110**, and so on.

Further, in processing operation #**4**, via communications **321**, the communication management resource **140** communicates attributes (a.k.a., HW-TYPE #**2**) of the user equipment **110** over the wireless communication link and network **190** to the management entity **195**. As previously discussed, the communications **321** can be configured to include the network address ZZZ**1** assigned to the communication management entity **195**. The network **190** routes the communications **321** to the communication management entity **195** based upon the destination network address ZZZ**1** in the communications **321**.

In accordance with one implementation, the communication management resource **140** (and corresponding executed startup program **235**) initiates transmission of the communication **321** to the communication management in **195** in response to detecting a condition such as absence of an operating system being installed on the user equipment **110** in repository **181**. In other words, the communication management resource **140** can be configured to first execute an operating system in the repository **181** to support functionality associated with the user equipment **110**. If the operating system has not yet been installed on the user equipment **110**, the communication management resource **140** reverts to execution of the startup program **235** and providing notification on the display screen **130** to the user **108** that the user equipment **110** can be configured with an operating system.

Note further that the startup program **235** may include boot capabilities in which the execution of the starter program **235** loads any operating system for execution by the communication management resource **140** upon power up of the user equipment **110**. As previously discussed,

because no operating system has been installed on the user equipment **110** at or around time T**1**, the communication management resource **140** executes the startup program **235**.

In processing operation #**5**, and in response to receiving the communications **321** and corresponding notification that the user equipment **110** assigned the network address XXXY is of the type=HARDWARE TYPE #**2**, via mapping information **355**, the communication management entity **195** maps the received configuration information HW-TYPE #**2** to one or more different operating systems (such as operating system OS**1**, OS**2**, and OS**6**) supported by the corresponding make, model version, etc., of the user equipment **110**.

In processing operation #**6**, via communications **322** (such as including destination=network address XXXY) from the communication management entity **195** to the communication management resource **140**, the communication management entity **195** provides notification to the communication management resource **140** of the identities of the operating systems OS**1**, OS**2**, and OS**6** to the communication management resource **140** and user equipment **110**. The network **190** routes communications **322** to the communication management resource **140** via network address XXXY (destination network address).

Accordingly, based on the retrieved and communicated attributes of the user equipment **110**, the communication management resource **140** and corresponding user equipment **110** receives identities of multiple operating systems OS**1**, OS**2**, and OS**6** available for retrieval and installation onto the user equipment **110**.

As further shown, in processing operation #**7**, in accordance with the communications **322**, the communication management resource **140** presents (i.e., displays) the received identities of available operating systems OS**1**, OS**2**, and OS**6** on a display screen **130** of the user equipment **110** for selection by the user **108** of the user equipment **108**. Additionally, or alternatively, the communication management resource **140** can be configured to select an appropriate operating system to install without displaying the operating system options and receiving input from the respective user **108**.

FIG. **4** is an example diagram illustrating selection and downloading and installation of a selected operating system on a mobile communication device as discussed herein.

In processing operation #**8**, at or around time T**4**, via input **405** from user **108** to the user equipment **110** and corresponding communication management resource **140**, the user **108** or other suitable entity provides selection of operating system OS**6** on the display screen **130**.

In response to selection of the operating system OS**6** from the identities of the multiple operating systems on display screen **130** as indicated by input **405**, in processing operation #**9**, the communication management resource **140** communicates an identity of the selected operating system OS**6** over the wireless communication link **127** to the management entity **195** via communications **421**. This notifies the communication management entity **195** that the repository **180** is to be populated with the operating system OS**6** for execution by the communication management resource **140**.

In processing operation #**10**, to accommodate the request for operating system OS**6**, the communication management entity **195** retrieves the operating system OS**6** for processing and transmission to the user equipment **110** in a reverse direction in communications **422**.

Accordingly, in response to communicating the identity of the selected operating system OS**6** to the management entity **195** in communications **421**, the communication management resource **140** and corresponding user equipment **110** receive a download of the operating system OS**6** over network **190** and the wireless communication link **127** via communications **422**. The communication management resource **140** (via executed startup program **235**) installs the received operating system OS**6** (software instructions, data, etc.) onto the user equipment **110** (mobile communication device) in processing operation #**11** for subsequent execution by the communication management resource **140**.

Note that the communications **422** may further indicate one or more specific wireless network service providers associated with or supported by the operating system OS**6** selected by the user **108** or other suitable entity.

FIG. **5** is an example diagram illustrating scanning of wireless networks to learn of available wireless services as described herein.

In processing operation #**12**, subsequent to installing the first operating system OS**6** (such as stored in repository **181**) on the user equipment **110** via communications received over the wireless communication link **127**, the communication management resource **140** initiates scanning (from antenna hardware AH**1**) for presence of wireless networks and corresponding wireless access points supported by the selected operating system OS**6**.

For example, in response to the scanning of different carrier frequencies, different wireless communication protocols (such as Wi-Fi™, 3G, 4G, 5G, . . . , NR, etc.), etc., in processing operation #**13**, the communication management resource **140** detects identities of multiple different wireless network service providers supported by the selected operating system OS**6**. As previously discussed, communications **422** may further indicate one or more specific wireless network service providers associated with or supported by the operating system OS**6** selected by the user **108** or other suitable entity. The user equipment **110** can be configured to scan for presence of any of the specified service provider's wireless networks supported by the operating system OS**6**. Additionally, or alternatively, the user equipment **110** can be configured to scan for any available wireless network service providers.

In response to the scanning in processing operation #**13**, assume that the communication management resource **140** detects availability of wireless networks associated with multiple service providers such as wireless network service provider #**1**, wireless network service provider #**4**, and wireless network service provider #**5**.

In processing operation #**14**, the communication management resource **140** displays identities of the detected available wireless network service providers on the display screen **130** for selection by the corresponding user **108** or other suitable entity associated with the user equipment **110**. The executed startup program **235** can be configured to filter detected wireless network service providers such that the displayed identities on display screen **130** indicate only wireless networks and service providers supporting operating system OS**6**.

FIG. **6** is an example diagram illustrating display of identities of available wireless network service providers and selection of a respective service provider to support connectivity with a wireless network as described herein.

In processing operation #**15**, the communication management resource **140** receives input **605** indicating selection of the wireless network service provider #**4**. In processing operation #**16**, the communication management resource **140** receives notification of the selection of wireless network service provider #**4** amongst the multiple wireless network service providers displayed in display screen **130**.

The selection of the wireless network service provider #**4** prompts the communication management resource **140** (such as executing corresponding startup program **235** or operating system OS**6**) to determine a respective network address of a corresponding portal **695** supported by the selected wireless network service provider #**4**.

In this example, the communication management resource **140** determines the portal **695** (network address YYY**5**) is used for signing up the user **108** and corresponding user equipment **110** to use the wireless services by the selected wireless network service provider #**4**. In such an instance, in furtherance of the user equipment **110** signing up to use wireless services provided by the wireless network service provider #**4**, the communication management resource **140** transmits communications **622** (destination=YYY**5**) over the wireless communication link **627** through the network **190** to the corresponding wireless network portal **695** associated with service provider #**4** having assigned network address YYY**5**.

Note that, in furtherance of signing up the corresponding user **108** and user equipment **110** for use of wireless services, the communication management resource **140** can be configured to forward information such as hardware type HW-TYPE #**2** to the portal **695**. The portal **695** can be configured to use this information as a basis for determining appropriate antenna hardware configuration information that supports subsequent wireless communications between the antenna hardware AH**1** and the wireless base stations (wireless access points) in network **190** operated by the selected wireless network service provider #**4**.

Thus, in processing operation #**18**, via further communications **622** transmitted from the communication management resource **140** to the wireless network service provider portal **695**, the user **108** and/or corresponding communication management resource **140** provides appropriate information to the portal **695** associated with service provider #**4** to sign up the user equipment **110** for use of corresponding wireless network services provided by wireless network service provider #**4**.

Further in processing operation #**19**, via communications **631**, the portal **695** retrieves and forwards the retrieved antenna hardware configuration information AS**11** (such as notification of carrier frequencies, power levels, etc.) for use by the user equipment **110**. The configuration information AS**11** enables the user equipment **110** to communicate wireless access points (such as wireless base stations) operated by the wireless network service provider #**4** in network **190**. Such wireless access points provide the user equipment **110** wireless access to remote networks such as the Internet.

In processing operation #**20**, the communication management resource **140** stores the antenna hardware configuration information AS**11** in repository **182**. The wireless interface **111** applies the antenna hardware configuration information AS**11** to antenna hardware **151** to support subsequent wireless connectivity with the wireless access points operated by the wireless network service provider #**4**.

Thus, in order to use wireless services and corresponding wireless access points in network **190** associated with the wireless network service provider #**4**, in processing operation #**19**, the portal **695** associated with service provider #**4** retrieves appropriate antenna hardware configuration information AS**11** and forwards it to the user equipment **110** for storage in repository **182**. As previously discussed, the configuration information AS**11** received over the wireless communication link **627**, when implemented by the antenna hardware **151**, supports communications between the user equipment **110** and wireless access points operated by the selected wireless network service provider #**4**.

In one example, the configuration information AS**11** includes antenna settings for application to antenna hardware **151** (such as identities of carrier frequencies, power levels, etc.) of the user equipment **110** (mobile communication device). Installation of the antenna settings AS**11** supports wireless connectivity of the antenna hardware AH**1** of the user equipment **110** to the wireless access points operated by the wireless network service provider #**4**.

Further in this example, note that the user equipment **110** is not yet completely configured to receive wireless network services associated with the wireless network service provider #**4**. In other words, as further discussed herein, the user equipment **110** needs to be programmed with SIM information in order to use requested wireless network services as further discussed below.

FIG. **7** is an example diagram illustrating retrieval and installation of a respective SIM information onto a mobile communication device to support wireless connectivity as described herein.

Via input **705**, in processing operation #**21**, in furtherance of using services provided by the wireless network service provider #**4**, the user **108** requests retrieval of corresponding subscriber identity module information to install on the user equipment **110**.

In response to receiving the input **705** in processing operation #**21**, the communication management resource **140** transmits communications **722** to the eSIM portal **795** associated with the wireless network service provider #**4** in processing operation #**22**.

In processing operation #**23**, the portal **795** generates corresponding subscriber identity information eSIM**11** for distribution to the corresponding user equipment **110**. The SIM information eSIM**11** enables the user equipment **110** to use wireless access points associated with the selected wireless network service provider #**4**.

In processing operation #**24**, the portal **795** communicates the corresponding scriber information **135** (subscriber identity module information eSIM**11**) to the communication management resource **140**.

In processing operation #**25**, the communication management resource **140** stores the subscriber identity module information eSIM**11** in the eSIM device **122**.

In this example, the configuration information (subscriber identity information **131** or eSIM**11**) includes subscriber identity information for installation on the mobile communication device. Installation of the subscriber identity information eSIM**11** on the user equipment **110** supports wireless connectivity of the user equipment **110** via appropriate configuration of antenna hardware AH**1** to communicate with the wireless access points operated by the wireless network service provider #**4**. More specifically, the subscriber information **131** (or eSIM**11**) can be configured to include information such as authentication credentials (such as one or more encryption keys supporting communications), identity of the corresponding wireless network service provider, subscriber phone number, voicemail number, one or more applets for execution by the eSIM device **122**, etc.

FIG. **8** is an example diagram illustrating selection of different wireless services for a selected wireless network service provider as described herein.

In processing operation #**26**, the communication management resource **140** receives information from the wireless network service provider #**4** and corresponding portal **795** about different possible wireless network service options

such as Data and voice plan options selectable by the user **108**. The communication management resource **140** initiates display of the selectable options associated with the selected wireless network service provider #**4** to the user **108** via display screen **130**.

Via input **805**, in processing operation #**27**, in furtherance of using services provided by the wireless network service provider #**4**, the user **108** requests use of voice and data services. In response to receiving the selection of voice and data services from display screen **130**, in processing operation #**28**, the communication management resource **140** transmits communications **822** to the eSIM portal **795** associated with the wireless network service provider #**4**. This notifies the portal **795** of selected services voice and data.

In processing operation #**29**, the portal **795** generates corresponding supplemental subscriber identity information eSIM-SUPP**11** (providing support for voice and data options) for distribution to the corresponding user equipment **110**.

In processing operation #**30**, via communications **831**, the portal communicates the supplemental subscriber identity module information eSIM-SUPP**11** to the communication management resource **140**.

In processing operation #**31**, via communications **831**, the communication management resource **140** stores the supplemental subscriber identity module information eSIM-SUPP**11** in the hardware **141** associated with the eSIM device **122**.

FIG. **9** is an example diagram illustrating display of available applications for installation and download to a corresponding mobile communication device as described herein.

In processing operation #**32**, the communication management resource **140** is directed to the portal **995** for retrieval and download of possible applications onto the user equipment **110**. The communication management resource **140** (executing startup program **235** or operating system OS**6**) receives information from the wireless network service provider #**4** portal **995** or other suitable entity of different available applications (APP**1**, APP**2**, APP**3**, etc.) for downloading to the user equipment **110**. The communication management resource **140** initiates display of the selectable application options (APP**1**, APP**2**, APP**3**, etc.) for associated with the selected wireless network service provider #**4** to the user **108** via display screen **130**.

Via input **905**, in processing operation #**33**, the user **108** selects download of applications APP**1** and APP**3** onto the user equipment **110**. In response to receiving the selection of application APP**1** and APP**3** from the display screen **130**, in processing operation #**34**, the communication management resource **140** transmits communications **922** to the portal **995** for retrieval of applications APP**1** and APP**3**.

In processing operation #**35**, the portal **995** retrieves the requested applications APP**1** and APP**3**.

In processing operation #**36**, via communications **931**, the application portal **995** communicates the requested applications APP**1** and APP**3** to the communication management resource **140**.

In processing operation #**37**, the communication management resource **140** stores and/or installs the received applications APP**1** and APP**3** on the user equipment **110** such as storage in a repository **181** or other suitable entity.

When executing the operating system OS**6**, the installed applications can be executed by the operating system OS**6**.

Note further that, subsequent to selection of the operating system OS**6** from the identities of available operating systems and installation of the operating system OS**6** onto the mobile communication device, the user equipment **110** may receive a command from the user **108** indicating to remove the first operating system OS**6** from the user equipment **110**. In response to receiving the command, the communication management resource **140** removes the first operating system OS**6** from the user equipment **110**.

In a similar manner as previously discussed, the user **108** may select a new operating system for installation on the user equipment **110**. For example, the user **108** can provide input to the user equipment **110** and corresponding communication management resource **140** to delete the corresponding operating system OS**6** and one or more of the antenna hardware configuration information AS**11**, eSIM**11**, applications, etc. Starting again at FIG. **2**, the user **108** reconfigure the user equipment **110** a different operating system such as operating system OS**2**. In such an instance, in response to selection of a second operating system OS**2** from the identities of multiple operating systems, the communication management resource **140**: i) receives a download of the second operating system OS**2**, and ii) installs the second operating system OS**2** onto the mobile communication device.

FIG. **10** is an example block diagram of a computer system for implementing any of the operations as previously discussed according to embodiments herein.

Any of the resources (such as each of one or more wireless communication devices, communication management entity, communication management resource **140**, startup program **235**, user equipment **110**, eSIM device **122**, etc.) as discussed herein can be configured to include computer processor hardware and/or corresponding executable (software) instructions to carry out the different operations as discussed herein.

As shown, computer system **1050** of the present example includes an interconnect **1011** coupling computer readable storage media **1012** such as a non-transitory type of media or any suitable type of hardware storage medium in which digital information can be stored and retrieved, a processor **1013** (computer processor hardware), I/O interface **1014**, and a communications interface **1017**.

I/O interface(s) **1014** supports connectivity to repository **1080** and input resource **1092**.

Computer readable storage medium **1012** can be any hardware storage device such as memory, optical storage, hard drive, floppy disk, etc. In one embodiment, the computer readable storage medium **1012** stores instructions and/or data.

As shown, computer readable storage media **1012** can be encoded with management application **140-1** (e.g., including instructions) to carry out any of the operations as discussed herein.

During operation, processor **1013** accesses computer readable storage media **1012** via the use of interconnect **1011** in order to launch, run, execute, interpret or otherwise perform the instructions in in the management application **140-1** stored on computer readable storage medium **1012**. Execution of the management application **140-1** produces management process **140-2** to carry out any of the operations and/or processes as discussed herein.

Those skilled in the art will understand that the computer system **1050** can include other processes and/or software and hardware components, such as an operating system that controls allocation and use of hardware resources to execute management application **140-1**.

In accordance with different embodiments, note that computer system may reside in any of various types of devices,

including, but not limited to, a mobile computer, wireless communication device, gateway resource, communication management resource, a personal computer system, a wireless device, a wireless access point, a base station, phone device, desktop computer, laptop, notebook, netbook computer, mainframe computer system, handheld computer, workstation, network computer, application server, storage device, a consumer electronics device such as a camera, camcorder, set top box, mobile device, video game console, handheld video game device, a peripheral device such as a switch, modem, router, set-top box, content management device, handheld remote control device, any type of computing or electronic device, etc. The computer system **1050** may reside at any location or can be included in any suitable resource in any network environment to implement functionality as discussed herein.

Functionality supported by the different resources will now be discussed via flowchart **1100** (flowchart **1100-1** and flowchart **1100-2**) in FIGS. **11** and **12**. Note that the steps in the flowcharts below can be executed in any suitable order.

FIG. **11** is a flowchart **1100-1** illustrating an example method according to embodiments herein. Note that there will be some overlap with respect to concepts as discussed above.

In processing operation **1110**, the communication management resource **140** (such as communication management hardware or communication management software) detects absence of an operating system installed on the mobile communication device (user equipment **110**).

In processing operation **11020**, the communication management resource **140** establishes a wireless communication link between the mobile communication device and a management entity.

In processing operation **1130**, the communication management resource **140** communicates attributes of the mobile communication device over the wireless communication link to the management entity.

In processing operation **1140**, based on the attributes, the communication management hardware of the mobile communication device receives identities of multiple operating systems available for retrieval and installation onto the mobile communication device.

FIG. **12** is a flowchart **1100-2** illustrating an example method according to embodiments herein.

In processing operation **1150** of FIG. **12**, the communication management resource of the mobile communication device (i.e., user equipment **110**) presents the received identities on a display screen of the mobile communication device for selection by a user of the mobile communication device.

In processing operation **1160**, in response to selection of a first operating system from the identities of the multiple operating systems, the communication management resource communicates an identity of the first operating system over the wireless communication link to the management entity.

In processing operation **1170**, in response to communicating the identity of the first operating system to the management entity, the communication management resource: i) receives a download of the first operating system over the wireless communication link, and ii) installs the first operating system onto the mobile communication device.

In processing operation **1180**, subsequent to installing the first operating system on the mobile communication device via communications received over the wireless communication link, the communication management resource scans for presence of wireless networks supported by the first operating system installed on the mobile communication device. The scanning for presence of wireless networks results in the mobile communication device detecting identities of multiple different wireless network service providers supporting the first operating system.

In processing operation **1190**, the mobile communication device: i) receives selection of a first wireless network service provider amongst the multiple wireless network service providers, ii) communicates with a remote communication management entity, and iii) receives configuration information over the wireless communication link.

The configuration information supports communications between the mobile communication device and wireless access points operated by the first wireless network service provider.

Note again that techniques herein are well suited to facilitate wireless communications and configuration of respective one or more instances of user equipment in a wireless network environment. However, it should be noted that embodiments herein are not limited to use in such applications and that the techniques discussed herein are well suited for other applications as well.

Based on the description set forth herein, numerous specific details have been set forth to provide a thorough understanding of claimed subject matter. However, it will be understood by those skilled in the art that claimed subject matter may be practiced without these specific details. In other instances, methods, apparatuses, systems, etc., that would be known by one of ordinary skill have not been described in detail so as not to obscure claimed subject matter. Some portions of the detailed description have been presented in terms of algorithms or symbolic representations of operations on data bits or binary digital signals stored within a computing system memory, such as a computer memory. These algorithmic descriptions or representations are examples of techniques used by those of ordinary skill in the data processing arts to convey the substance of their work to others skilled in the art. An algorithm as described herein, and generally, is considered to be a self-consistent sequence of operations or similar processing leading to a desired result. In this context, operations or processing involve physical manipulation of physical quantities. Typically, although not necessarily, such quantities may take the form of electrical or magnetic signals capable of being stored, transferred, combined, compared or otherwise manipulated. It has been convenient at times, principally for reasons of common usage, to refer to such signals as bits, data, values, elements, symbols, characters, terms, numbers, numerals or the like. It should be understood, however, that all of these and similar terms are to be associated with appropriate physical quantities and are merely convenient labels. Unless specifically stated otherwise, as apparent from the following discussion, it is appreciated that throughout this specification discussions utilizing terms such as "processing," "computing." "calculating." "determining" or the like refer to actions or processes of a computing platform, such as a computer or a similar electronic computing device, that manipulates or transforms data represented as physical electronic or magnetic quantities within memories, registers, or other information storage devices, transmission devices, or display devices of the computing platform.

While this invention has been particularly shown and described with references to preferred embodiments thereof, it will be understood by those skilled in the art that various changes in form and details may be made therein without departing from the spirit and scope of the present application

as defined by the appended claims. Such variations are intended to be covered by the scope of this present application. As such, the foregoing description of embodiments of the present application is not intended to be limiting. Rather, any limitations to the invention are presented in the following claims.

I claim:

1. A method comprising:

at a mobile communication device:

i) establishing a wireless communication link supporting connectivity between the mobile communication device and a management entity;

ii) communicating attributes of the mobile communication device over the wireless communication link to the management entity in response to detecting absence of any operating system being installed on the mobile communication device, the attributes indicating a hardware type assigned to the mobile communication device; and

iii) based on the attributes, receiving identities of multiple operating systems available for retrieval and installation onto the mobile communication device.

2. The method as in claim **1** further comprising:

displaying the received identities of the multiple operating systems on a display screen of the mobile communication device for selection by a user of the mobile communication device.

3. The method as in claim **1** further comprising:

in response to selection of a first operating system from the received identities of the multiple operating systems, communicating an identity of the first operating system from the mobile communication device over the wireless communication link to the management entity; and

in response to communicating the identity of the first operating system to the management entity: i) at the mobile communication device, receiving a download of the first operating system over the wireless communication link, and ii) installing the first operating system onto the mobile communication device.

4. The method as in claim **1** further comprising:

subsequent to selection of a first operating system from the identities and installation of the first operating system onto the mobile communication device, receiving a first command from a user of the mobile communication device, the first command indicating to remove the first operating system from the mobile communication device; and

in response to receiving the first command, removing the first operating system from the mobile communication device.

5. The method as in claim **4** further comprising:

in response to selection of a second operating system from the identities of multiple operating systems: i) receiving a download of the second operating system at the mobile communication device, and ii) installing the second operating system onto the mobile communication device.

6. The method as in claim **1**, wherein the received identities of the multiple operating systems indicate operating systems executable by the hardware type assigned to the mobile communication device.

7. The method as in claim **1** further comprising:

at the mobile communication device:

receiving selection of a first operating system of the multiple operating systems;

receiving the first operating system over the wireless communication link; and

installing the received first operating system onto the mobile communication device.

8. The method as in claim **1** further comprising:

at the mobile communication device:

receiving selection of a first operating system from the received identities of the multiple operating systems; and

retrieving a download of the first operating system.

9. The method as in claim **8** further comprising:

installing the first operating system onto the mobile communication device.

10. A method comprising:

at a mobile communication device:

i) establishing a wireless communication link supporting connectivity between the mobile communication device and a management entity;

ii) communicating attributes of the mobile communication device over the wireless communication link to the management entity; and

iii) based on the attributes, receiving identities of multiple operating systems available for retrieval and installation onto the mobile communication device;

the method further comprising:

receiving selection of a first operating system of the multiple operating systems available for retrieval and installation onto the mobile communication device; and

subsequent to installing the first operating system on the mobile communication device via communications received over the wireless communication link, scanning for presence of wireless networks supported by the first operating system installed on the mobile communication device.

11. The method as in claim **10**, wherein the scanning for the presence of wireless networks results in the mobile communication device detecting identities of multiple different wireless network service providers supporting the first operating system.

12. The method as in claim **11** further comprising:

at the mobile communication device: i) receiving selection of a first wireless network service provider amongst the multiple different wireless network service providers, and ii) receiving configuration information over the wireless communication link, the received configuration information supporting wireless connectivity between the mobile communication device and wireless access points operated by the first wireless network service provider.

13. The method as in claim **12**, wherein the received configuration information includes subscriber identity information for installation on the mobile communication device, the method further comprising:

installing the subscriber identity information on the mobile communication device, the installation of the subscriber identity information on the mobile communication device supporting wireless connections of the mobile communication device to the wireless access points operated by the first wireless network service provider.

14. The method as in claim **12**, wherein the received configuration information includes antenna settings for application to antenna hardware of the mobile communication device, installation of the antenna settings on the mobile communication device supporting wireless connections of

the antenna hardware of the mobile communication device to the wireless access points operated by the first wireless network service provider.

15. A system comprising:

communication management hardware disposed in a mobile communication device, the communication management hardware operative to:

in response to detecting absence of an operating system installed on the mobile communication device:

i) establish a wireless communication link supporting connectivity between the mobile communication device and a management entity;

ii) communicate attributes of the mobile communication device over the wireless communication link to the management entity; and

iii) based on the attributes, receive identities of multiple operating systems available for retrieval and installation onto the mobile communication device;

wherein the communication management hardware is further operative to;

receive selection of a first operating system of the multiple operating systems available for retrieval and installation onto the mobile communication device; and

subsequent to installing the first operating system on the mobile communication device via communications received over the wireless communication link, scan for presence of wireless networks supported by the first operating system installed on the mobile communication device.

16. The system as in claim **15**, wherein the communication management hardware is further operative to:

display the received identities on a display screen of the mobile communication device for selection by a user of the mobile communication device.

17. The system as in claim **15**, wherein the communication management hardware is further operative to:

in response to selection of a first operating system from the received identities of the multiple operating systems, communicate an identity of the first operating system from the mobile communication device over the wireless communication link to the management entity; and

in response to communicating the identity of the first operating system to the management entity: i) at the mobile communication device, receive a download of the first operating system over the wireless communication link, and ii) install the first operating system onto the mobile communication device.

18. The system as in claim **15**, wherein the scan for the presence of wireless networks results in detection, by the mobile communication device, of identities of multiple different wireless network service providers supporting the first operating system.

19. The system as in claim **18**, wherein the communication management hardware is further operative to:

i) receive selection of a first wireless network service provider amongst the multiple different wireless network service providers, and ii) receive configuration information over the wireless communication link, the received configuration information supporting wireless connectivity between the mobile communication device and wireless access points operated by the first wireless network service provider.

20. The system as in claim **19**, wherein the received configuration information includes subscriber identity information for installation on the mobile communication device, installation of the subscriber identity information on the mobile communication device supporting wireless connections of the mobile communication device to the wireless access points operated by the first wireless network service provider.

21. The system as in claim **19**, wherein the configuration information includes antenna settings for application to antenna hardware of the mobile communication device, installation of the antenna settings supporting wireless connections of the antenna hardware of the mobile communication device to the wireless access points operated by the first wireless network service provider.

22. The system as in claim **15**, wherein the communication management hardware is further operative to:

subsequent to selection of a first operating system from the identities and installation of the first operating system onto the mobile communication device, receive a first command from a user of the mobile communication device, the first command indicating to remove the first operating system from the mobile communication device; and

in response to receiving the first command, remove the first operating system from the mobile communication device.

23. The system as in claim **15**, wherein the communication management hardware is further operative to:

in response to selection of a second operating system from the identities of multiple operating systems: i) receive a download of the second operating system at the mobile communication device, and ii) install the second operating system onto the mobile communication device.

24. Computer-readable storage hardware having instructions stored thereon, the instructions, when carried out by computer processor hardware, cause the computer processor hardware to:

establish a wireless communication link supporting connectivity between a mobile communication device and a remote management entity;

communicate attributes of the mobile communication device over the wireless communication link to the remote management entity in response to detecting absence of any operating system being installed on the mobile communication device, the attributes indicating a hardware type assigned to the mobile communication device; and

based on the attributes, receive identities of multiple operating systems available for retrieval and installation onto the mobile communication device.

25. A method comprising:

at a mobile communication device:

i) establishing a wireless communication link supporting connectivity between the mobile communication device and a management entity;

ii) communicating attributes of the mobile communication device over the wireless communication link to the management entity; and

iii) based on the attributes, receiving identities of multiple operating systems available for retrieval and installation onto the mobile communication device;

the method further comprising: at the mobile communication device, during a condition in which no operating system has been installed on the mobile communication device: i) executing a startup program, and ii) providing notification on a display screen of the mobile

communication device, the notification indicating that the mobile communication device can be configured with an operating system.

26. A method comprising:

at a mobile communication device:

i) establishing a wireless communication link supporting connectivity between the mobile communication device and a management entity;

ii) communicating attributes of the mobile communication device over the wireless communication link to the management entity; and

iii) based on the attributes, receiving identities of multiple operating systems available for retrieval and installation onto the mobile communication device;

iv) receiving selection of a first operating system of the multiple operating systems;

v) receiving the first operating system over the wireless communication link; and

vi) installing the received first operating system onto the mobile communication device;

the method further comprising: in addition to receiving the first operating system, receiving a notification indicating identities of multiple different wireless network service providers supporting the first operating system.

27. The method as in claim **26** further comprising:

at the mobile communication device:

receiving selection of a first wireless network service provider amongst the multiple different wireless network service providers; and

in response to receiving the selection of the first wireless network service provider amongst the multiple different wireless network service providers, retrieving antenna settings for application to antenna hardware of the mobile communication device.

28. The method as in claim **27**, wherein retrieving the antenna settings includes:

establishing wireless connectivity between the mobile communication device and a wireless network supported by the first wireless network service provider; and

communicating from the mobile communication device over the established wireless connectivity to retrieve the antenna settings.

29. The method as in claim **28** further comprising:

installing the retrieved antenna settings on the mobile communication device, the installed antenna settings supporting wireless connections of the antenna hardware of the mobile communication device to wireless access points operated by the first wireless network service provider.

* * * * *