US012387904B2

(12) **United States Patent**
Schertel et al.

(10) **Patent No.: US 12,387,904 B2**
(45) **Date of Patent: Aug. 12, 2025**

(54) **EXAMINING, ANALYZING AND/OR PROCESSING AN OBJECT USING AN OBJECT RECEIVING CONTAINER**

(71) Applicant: **Carl Zeiss Microscopy GmbH**, Jena (DE)

(72) Inventors: **Andreas Schertel**, Aalen (DE); **Andreas Schmaunz**, Oberkochen (DE); **Endre Majorovits**, Aalen (DE); **Bernd Stenke**, Illertissen (DE); **Stephan Hiller**, Koenigsbronn (DE); **Matthias Karl**, Koenigsbronn (DE)

(73) Assignee: **Carl Zeiss Microscopy GmbH**, Jena (DE)

(*) Notice: Subject to any disclaimer, the term of this patent is extended or adjusted under 35 U.S.C. 154(b) by 0 days.

(21) Appl. No.: **18/333,699**

(22) Filed: **Jun. 13, 2023**

(65) **Prior Publication Data**

US 2023/0326707 A1 Oct. 12, 2023

Related U.S. Application Data

(62) Division of application No. 17/160,679, filed on Jan. 28, 2021, now Pat. No. 11,721,518.

(30) **Foreign Application Priority Data**

Jan. 30, 2020 (DE) 102020102314.6

(51) **Int. Cl.**
H01J 37/16 (2006.01)
H01J 37/145 (2006.01)
(Continued)

(52) **U.S. Cl.**
CPC ***H01J 37/16*** (2013.01); ***H01J 37/145*** (2013.01); ***H01J 37/1475*** (2013.01);
(Continued)

(58) **Field of Classification Search**
CPC .. H01J 37/00; H01J 37/02; H01J 37/16; H01J 37/145; H01J 37/1475; H01J 37/20;
(Continued)

(56) **References Cited**

U.S. PATENT DOCUMENTS

9,010,202 B2 4/2015 Stabacinskiene et al.
10,699,869 B2 6/2020 Preikszas et al.
(Continued)

FOREIGN PATENT DOCUMENTS

CN 101535809 A 9/2009
CN 110 189 974 A 8/2019
(Continued)

OTHER PUBLICATIONS

Chinese Office Action dated Oct. 30, 2023.
Chinese Office Action dated Jun. 17, 2024.
Chinese Office Action dated Sep. 30, 2024.

Primary Examiner — Jason L McCormack
(74) *Attorney, Agent, or Firm* — Westborough IP Group, LLC

(57) **ABSTRACT**

An object receiving container may receive an object which is examinable, analyzable and/or processable at cryo-temperatures. An object holding system may comprise an object receiving container. A beam apparatus or an apparatus for processing an object may comprise an object receiving container or an object holding system. An object may be examined, analyzed and/or processed using an object receiving container or an object holding system. The object receiving container may comprise a first container unit, a cavity for receiving the object, a second container unit, which is able to be brought into a first position and/or into a second position relative to the first container unit, and at least one fastening device which is arranged at the first
(Continued)

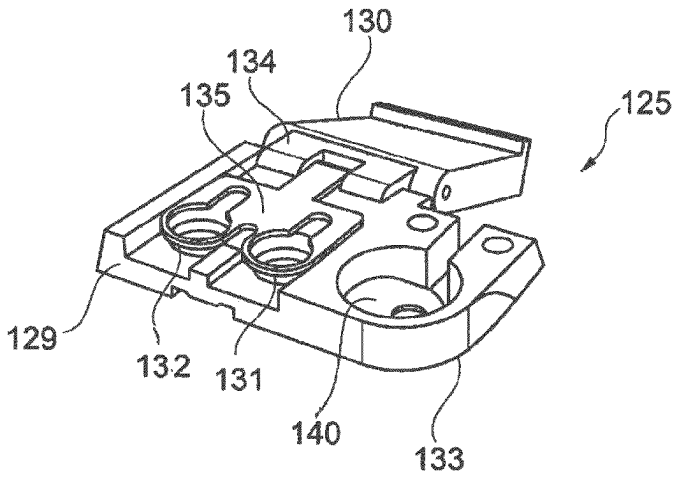

container unit or at the second container unit for arranging the object receiving container at a holding device.

14 Claims, 17 Drawing Sheets

(51) **Int. Cl.**
H01J 37/147 (2006.01)
H01J 37/20 (2006.01)
H01J 37/244 (2006.01)
H01J 37/28 (2006.01)

(52) **U.S. Cl.**
CPC ***H01J 37/20*** (2013.01); ***H01J 37/244*** (2013.01); ***H01J 37/28*** (2013.01); *H01J 2237/002* (2013.01); *H01J 2237/2001* (2013.01); *H01J 2237/2007* (2013.01)

(58) **Field of Classification Search**
CPC H01J 37/244; H01J 37/26; H01J 37/28; H01J 2237/002; H01J 2237/2001; H01J 2237/2007; G01N 23/04; G01N 23/2202; G01N 23/2206; G01N 23/2251
USPC 250/306, 307, 311
See application file for complete search history.

(56) **References Cited**

U.S. PATENT DOCUMENTS

2007/0252090	A1*	11/2007	van de Water	H01J 37/20 250/429
2010/0028982	A1	2/2010	Gillies et al.	
2010/0294049	A1*	11/2010	Kelley	H01J 37/20 73/864.91
2013/0014528	A1*	1/2013	Stabacinskiene	G01N 23/20033 62/129
2019/0103249	A1	4/2019	Biberger et al.	
2019/0295812	A1*	9/2019	Lee	H01J 37/261
2021/0035771	A1*	2/2021	Shukla	H01J 37/28

FOREIGN PATENT DOCUMENTS

DE	196 22 469	C1	10/1997
GB	1 355 975	A	6/1974
JP	H07-192898		7/1995
TW	201539151	A	10/2015
WO	WO 2008/155241	A2	12/2008
WO	WO 2015/135912	A2	9/2015

* cited by examiner

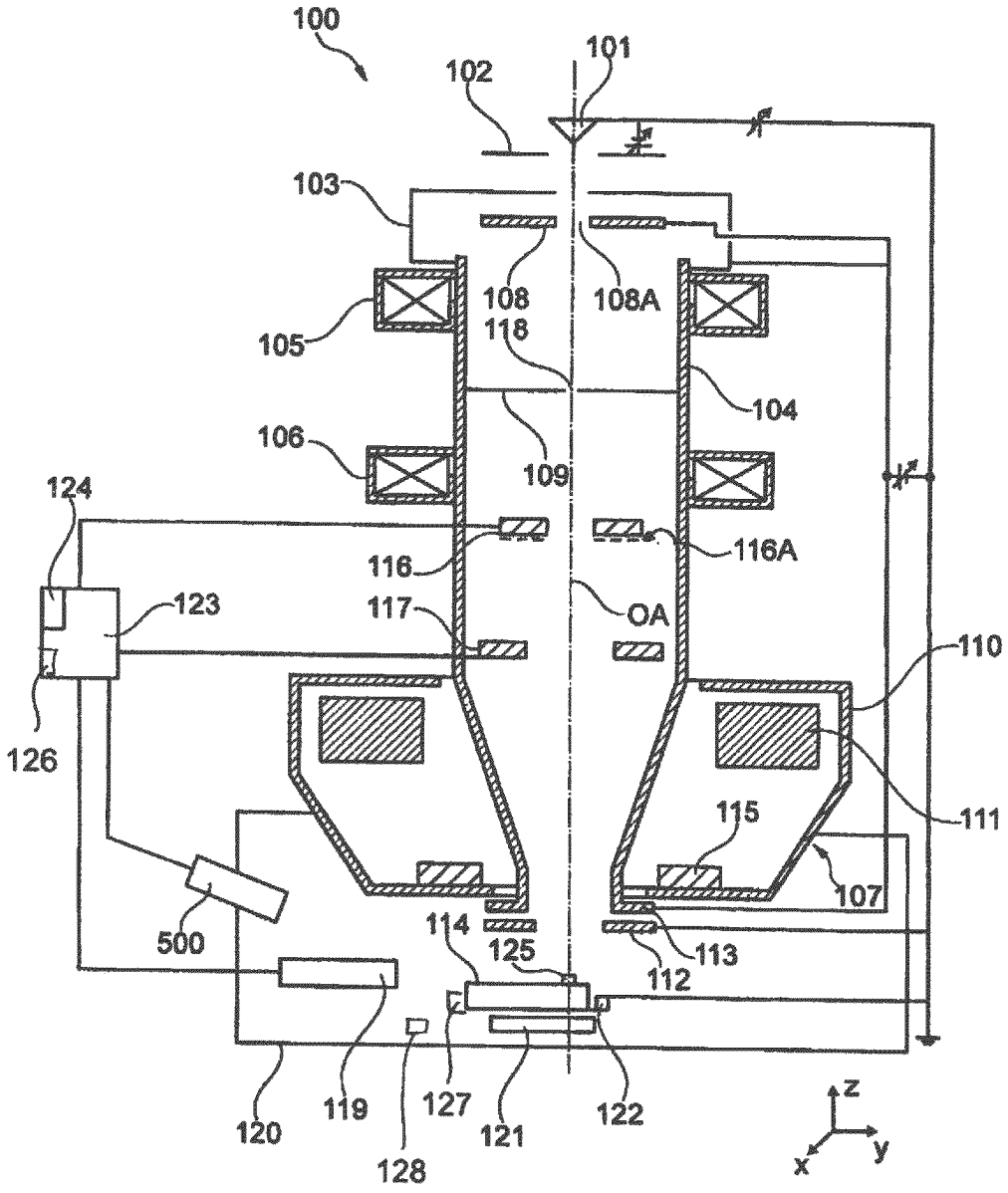
100
101
102
103
108
108A
118
105
104
106
109
124
116
116A
123
117
OA
110
126
111
115
107
500
114
125
113
112
120
119
127
121
122
128
z
x
y

Fig. 1

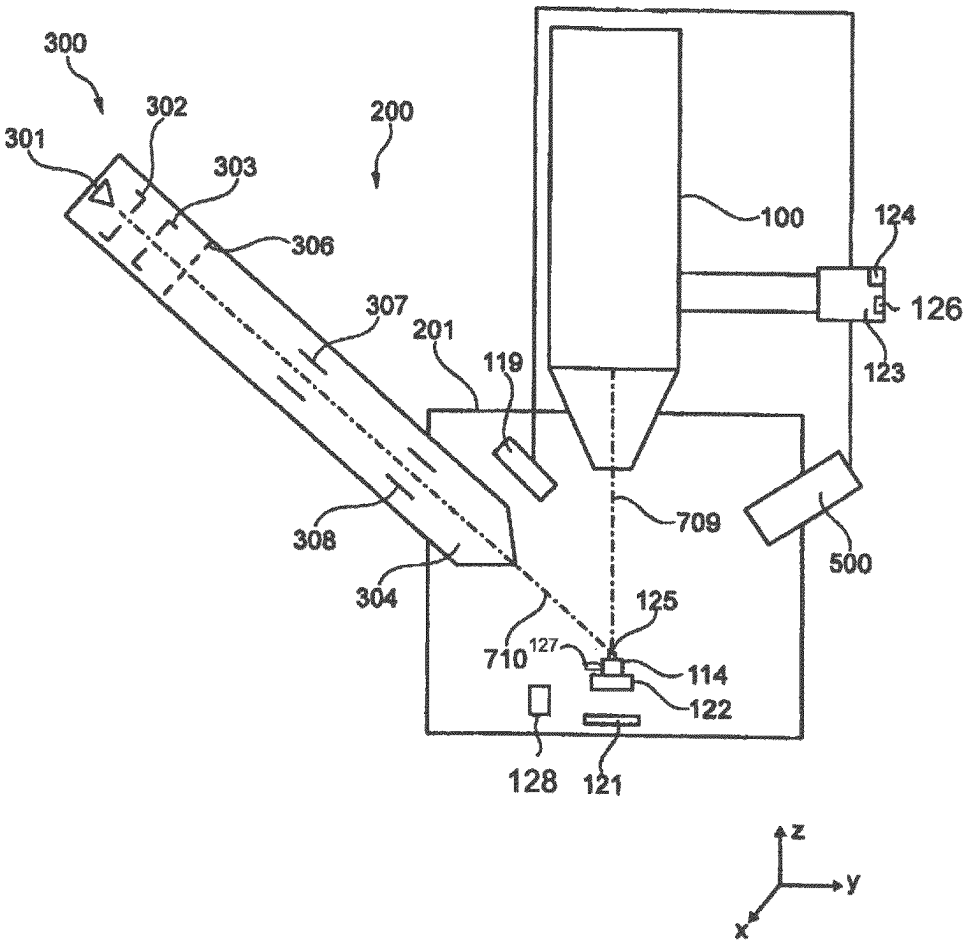
300
302
301
303
200
306
307
201
119
100
124
126
123
308
304
709
500
125
710
127
114
122
128
121
z
y
x

Fig. 2

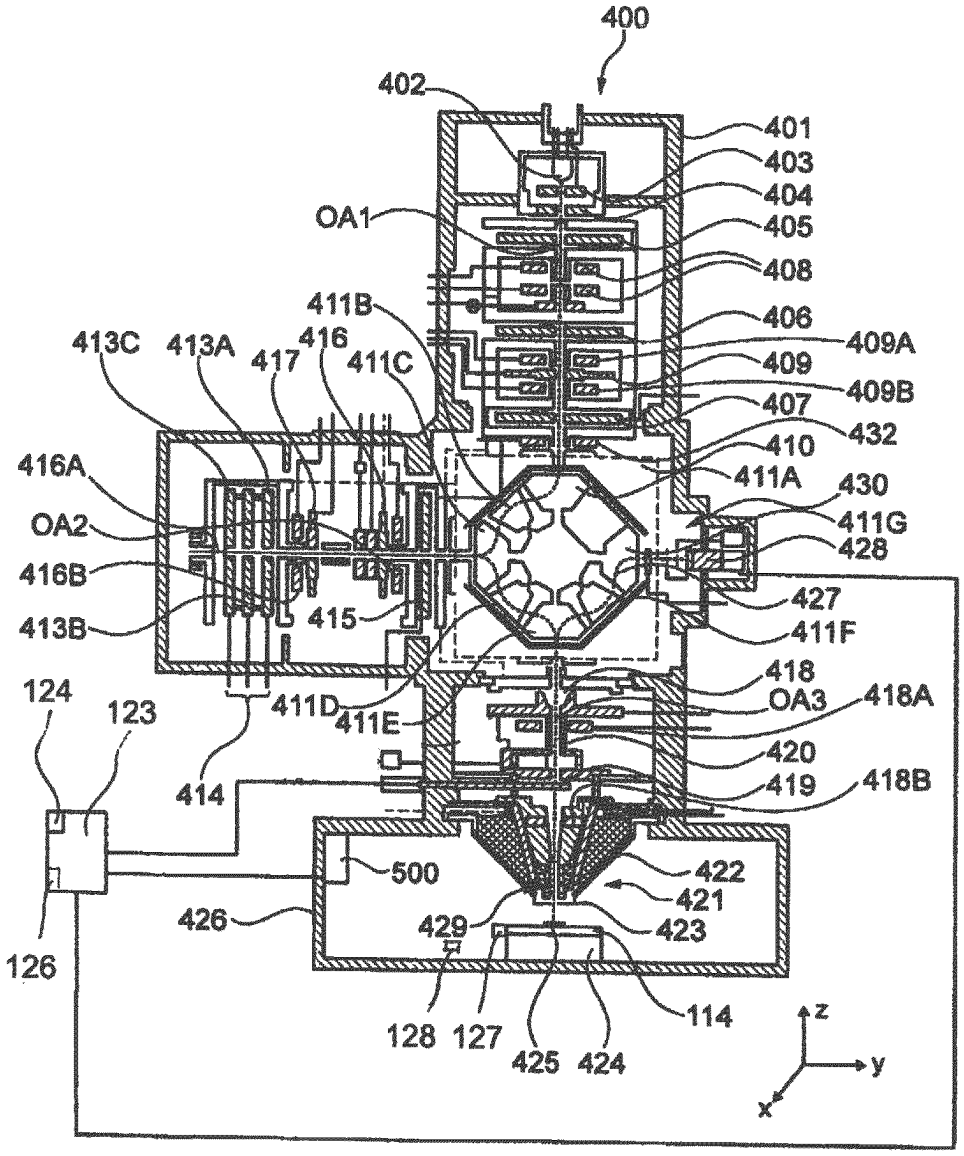
400
402
401
403
404
OA1
405
408
411B
406
413C
413A
417
416
411C
409A
409
409B
407
432
410
416A
411A
430
OA2
411G
428
416B
427
415
413B
411F
418
124
123
411D
411E
OA3
418A
420
414
419
418B
500
422
421
426
429
423
126
128
127
425
424
114
z
y
x

Fig. 3

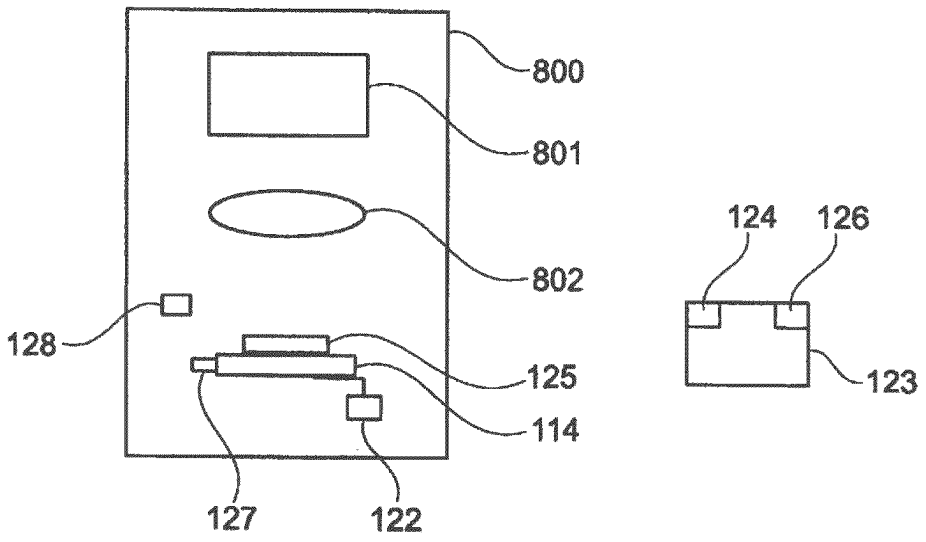

Fig. 4

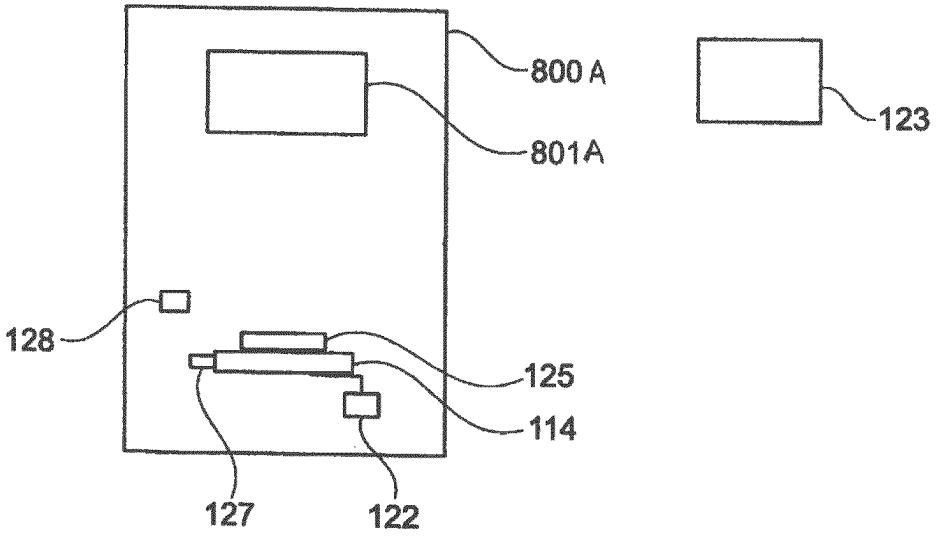

Fig. 4A

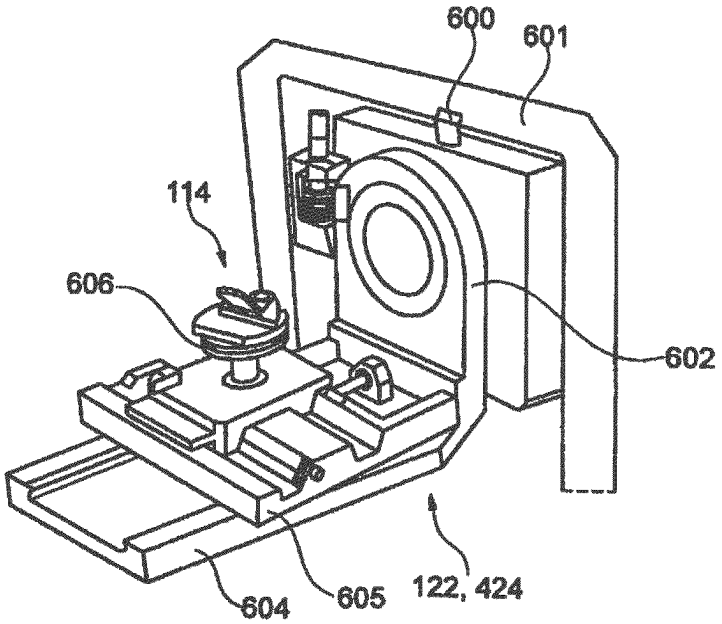

Fig. 5

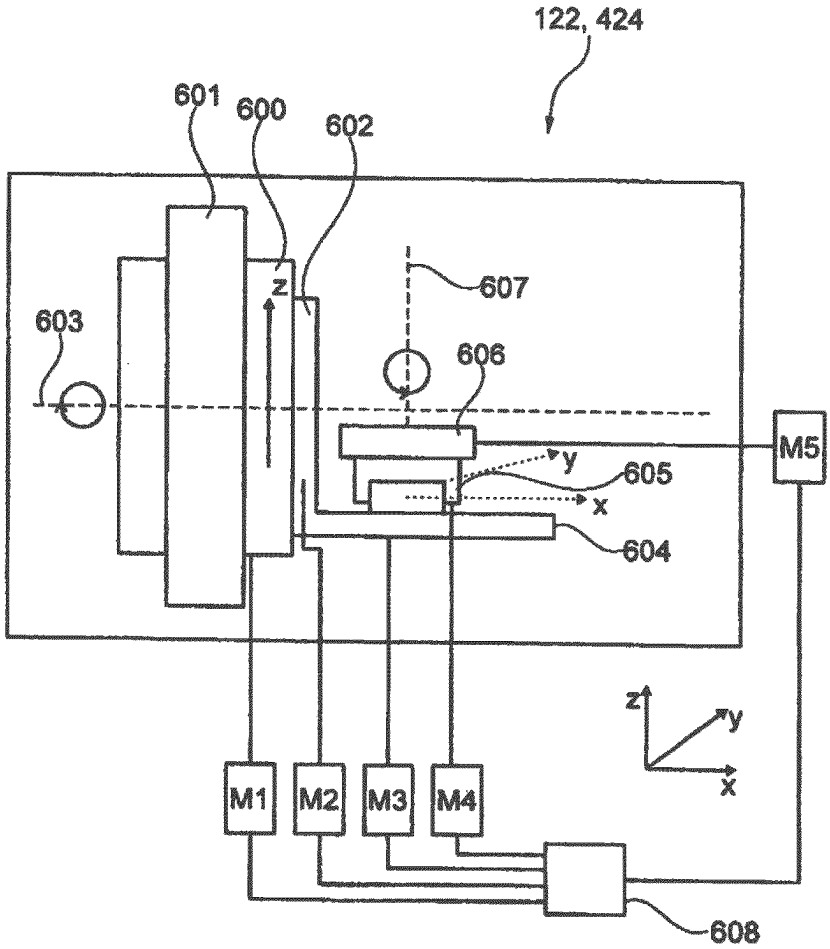

Fig. 6

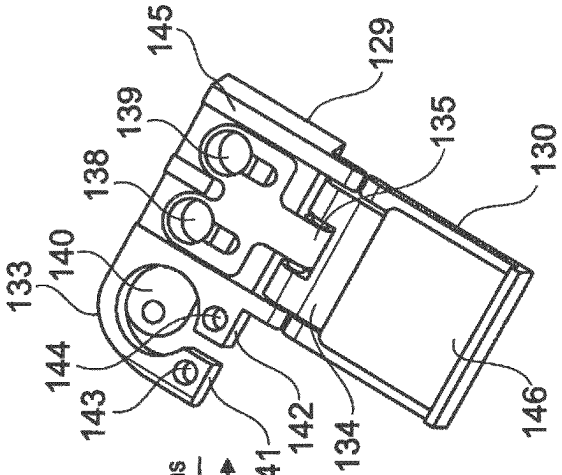

Fig. 9

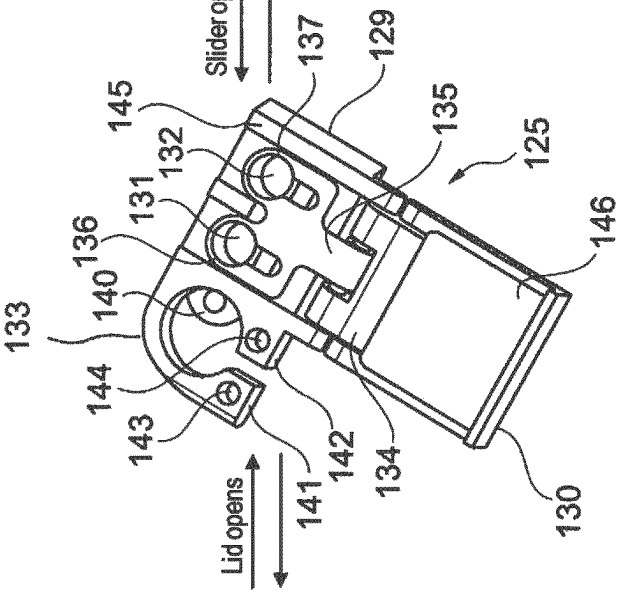

Fig. 7

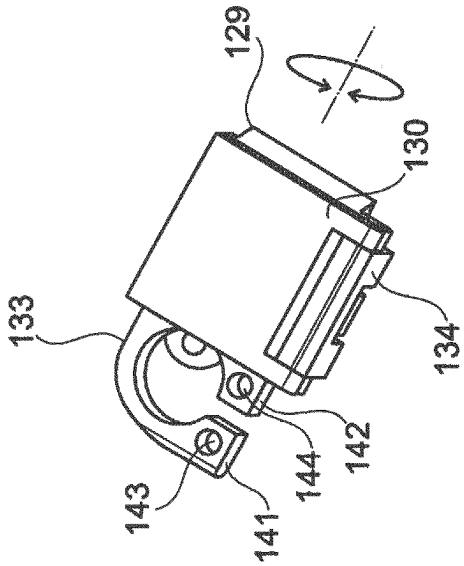

Fig. 8

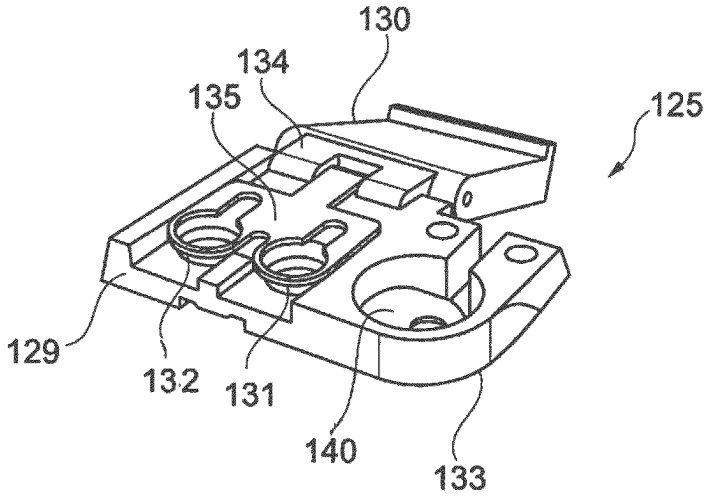
130
134
135
125
129
132
131
140
133

Fig. 10

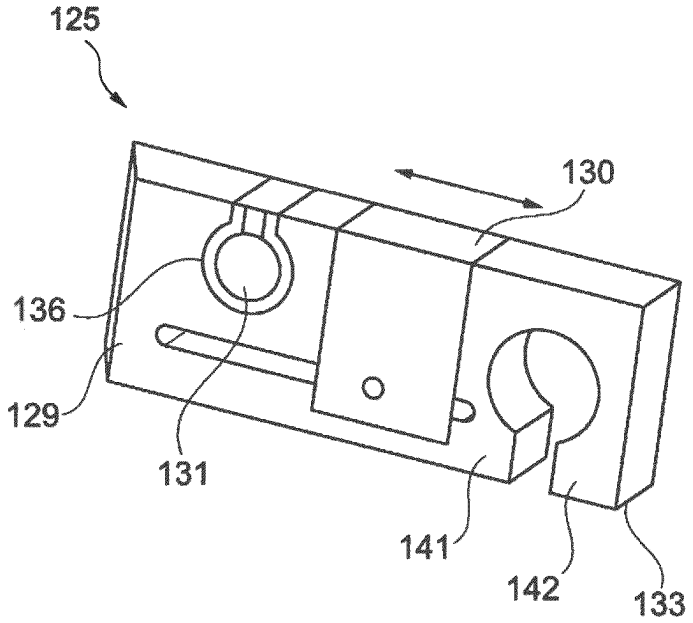
125
130
136
129
131
141
142
133

Fig. 11

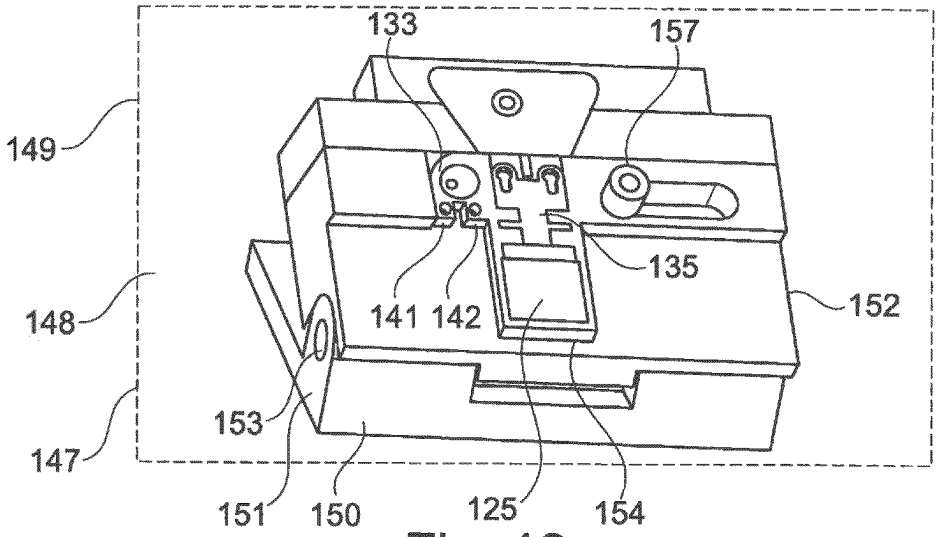

Fig. 12

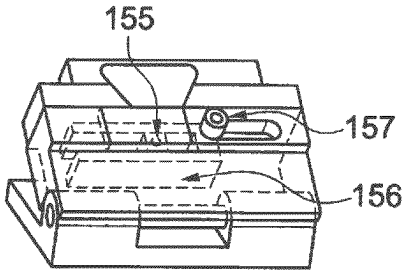

Fig. 13

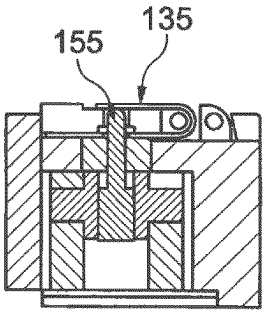

Fig. 14

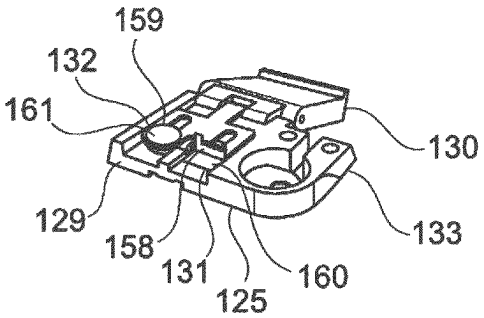
159
132
161
130
129
133
158
131
160
125

Fig. 15

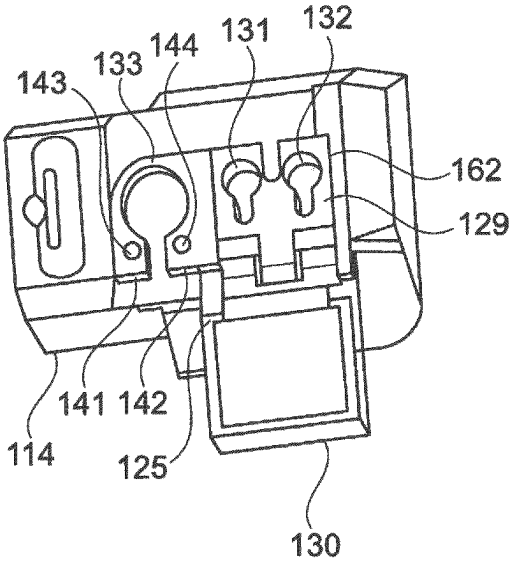
143
133
144
131
132
162
129
141
142
114
125
130

Fig. 16

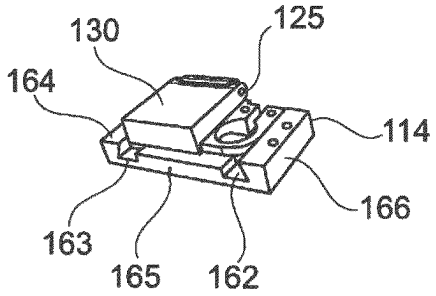

Fig. 17

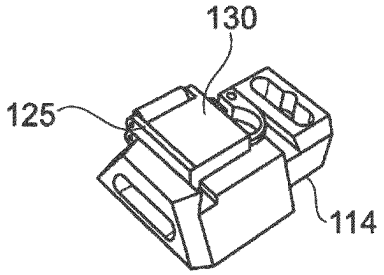

Fig. 18

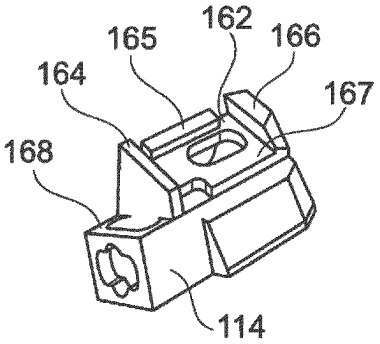

Fig. 19

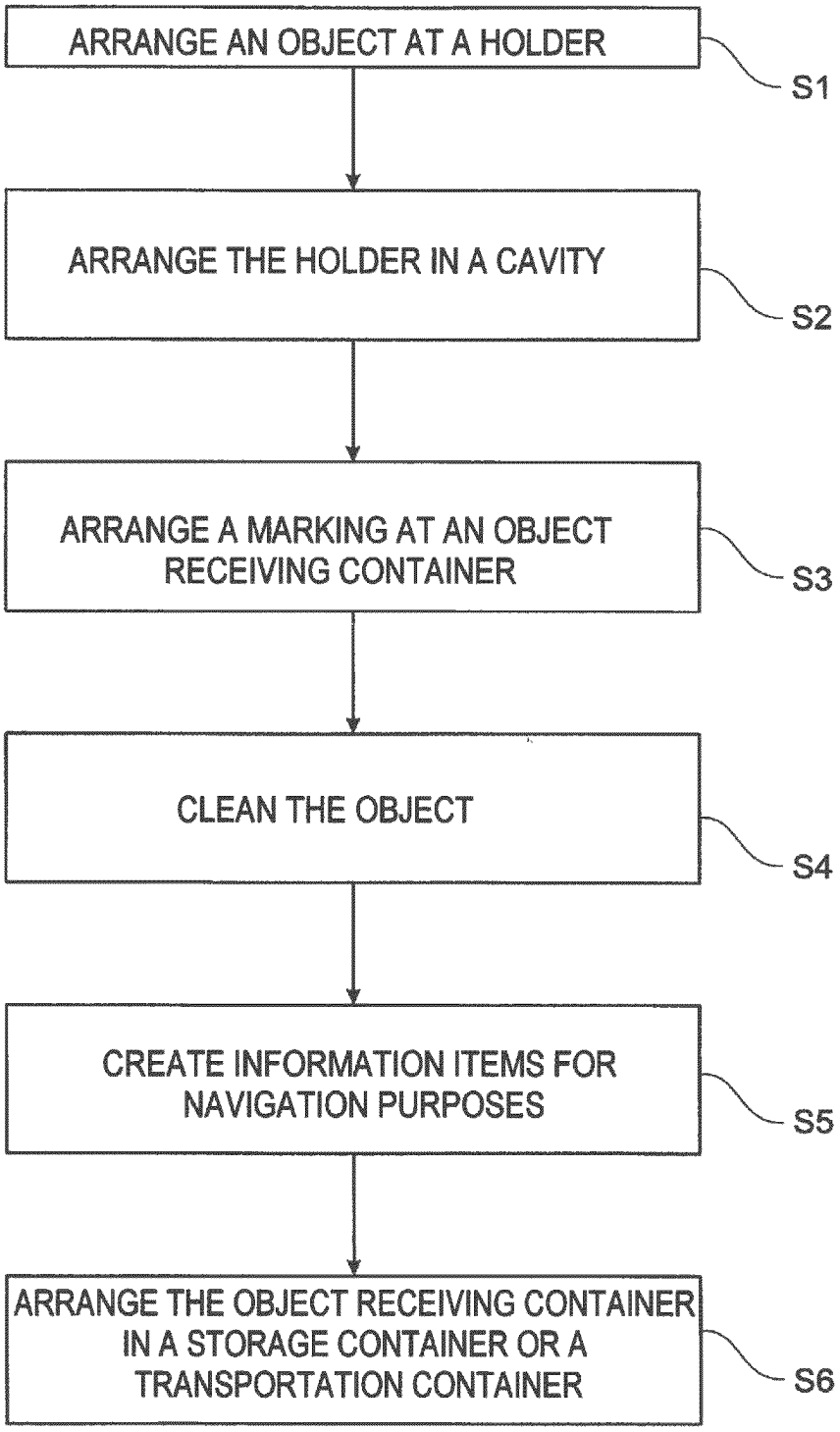
ARRANGE AN OBJECT AT A HOLDER
S1
ARRANGE THE HOLDER IN A CAVITY
S2
ARRANGE A MARKING AT AN OBJECT RECEIVING CONTAINER
S3
CLEAN THE OBJECT
S4
CREATE INFORMATION ITEMS FOR NAVIGATION PURPOSES
S5
ARRANGE THE OBJECT RECEIVING CONTAINER IN A STORAGE CONTAINER OR A TRANSPORTATION CONTAINER
S6

Fig. 20

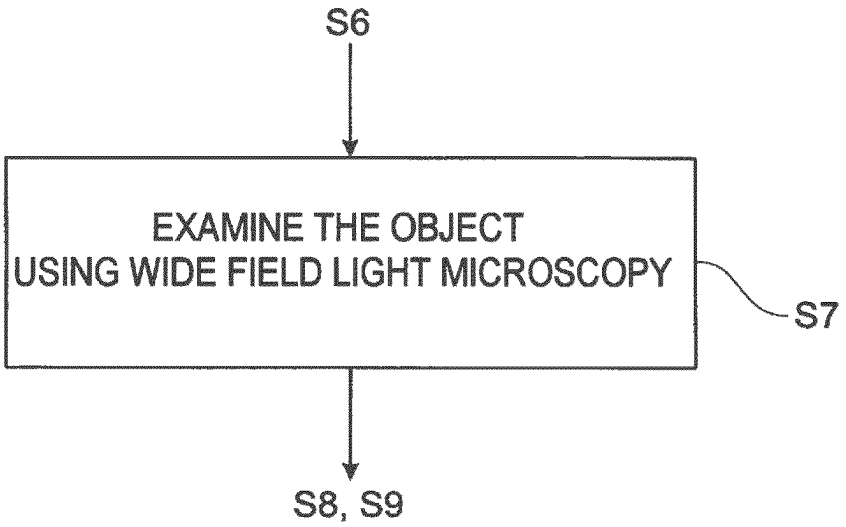
S6
EXAMINE THE OBJECT
USING WIDE FIELD LIGHT MICROSCOPY
S7
S8, S9

Fig. 21

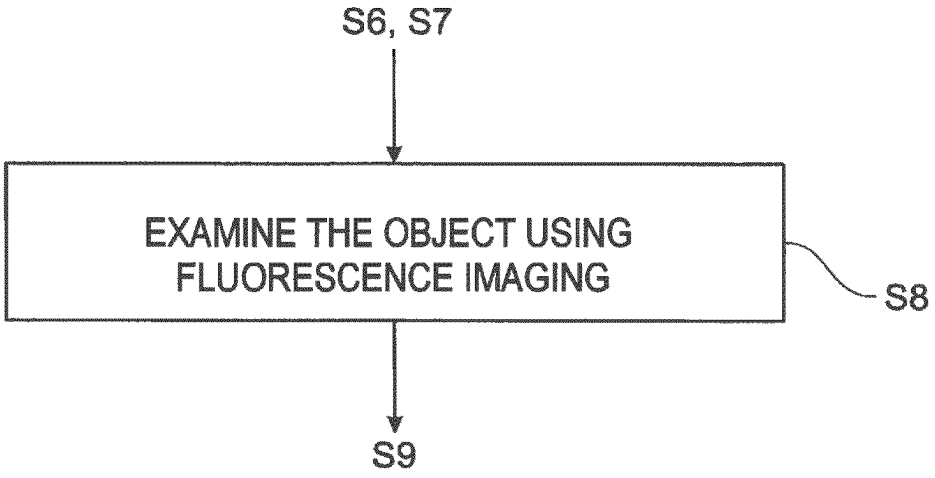
S6, S7
EXAMINE THE OBJECT USING
FLUORESCENCE IMAGING
S8
S9

Fig. 22

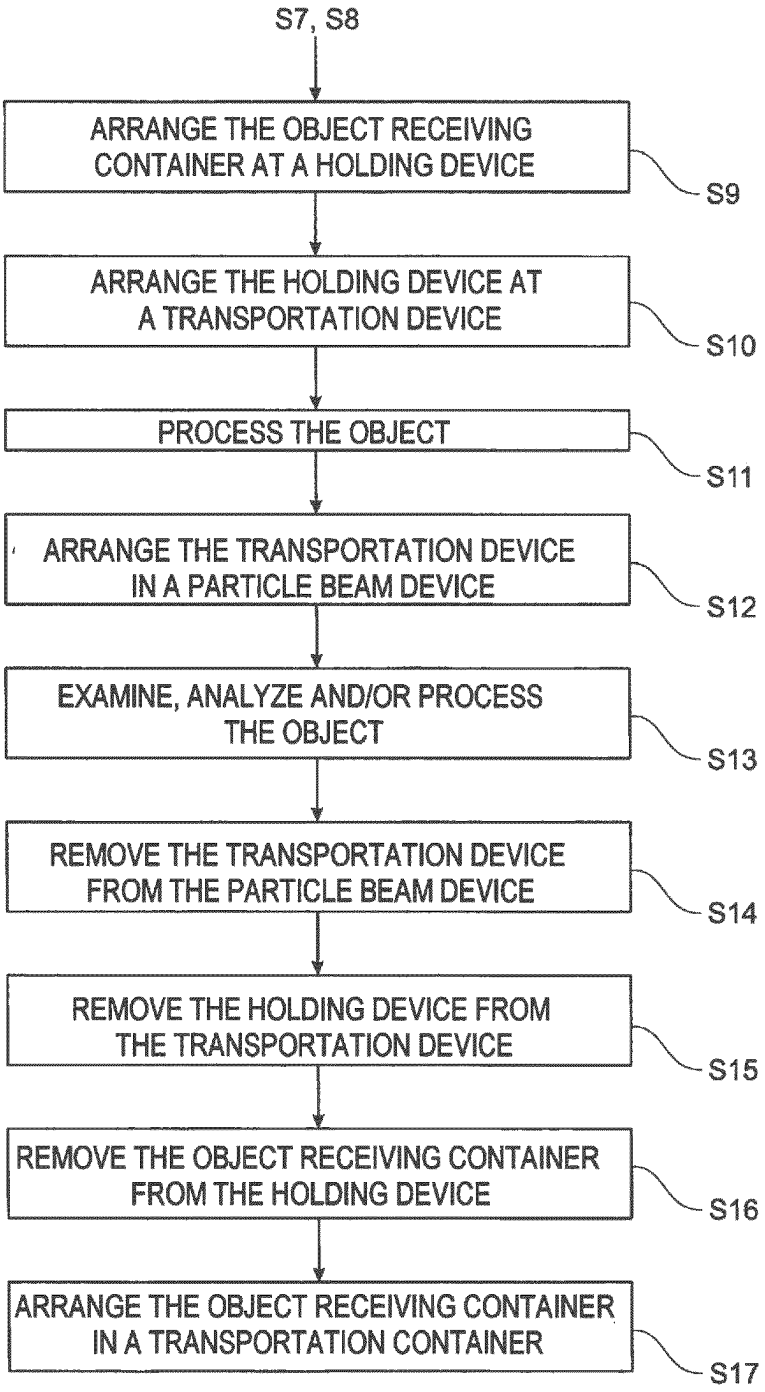
S7, S8
ARRANGE THE OBJECT RECEIVING CONTAINER AT A HOLDING DEVICE
S9
ARRANGE THE HOLDING DEVICE AT A TRANSPORTATION DEVICE
S10
PROCESS THE OBJECT
S11
ARRANGE THE TRANSPORTATION DEVICE IN A PARTICLE BEAM DEVICE
S12
EXAMINE, ANALYZE AND/OR PROCESS THE OBJECT
S13
REMOVE THE TRANSPORTATION DEVICE FROM THE PARTICLE BEAM DEVICE
S14
REMOVE THE HOLDING DEVICE FROM THE TRANSPORTATION DEVICE
S15
REMOVE THE OBJECT RECEIVING CONTAINER FROM THE HOLDING DEVICE
S16
ARRANGE THE OBJECT RECEIVING CONTAINER IN A TRANSPORTATION CONTAINER
S17

Fig. 23

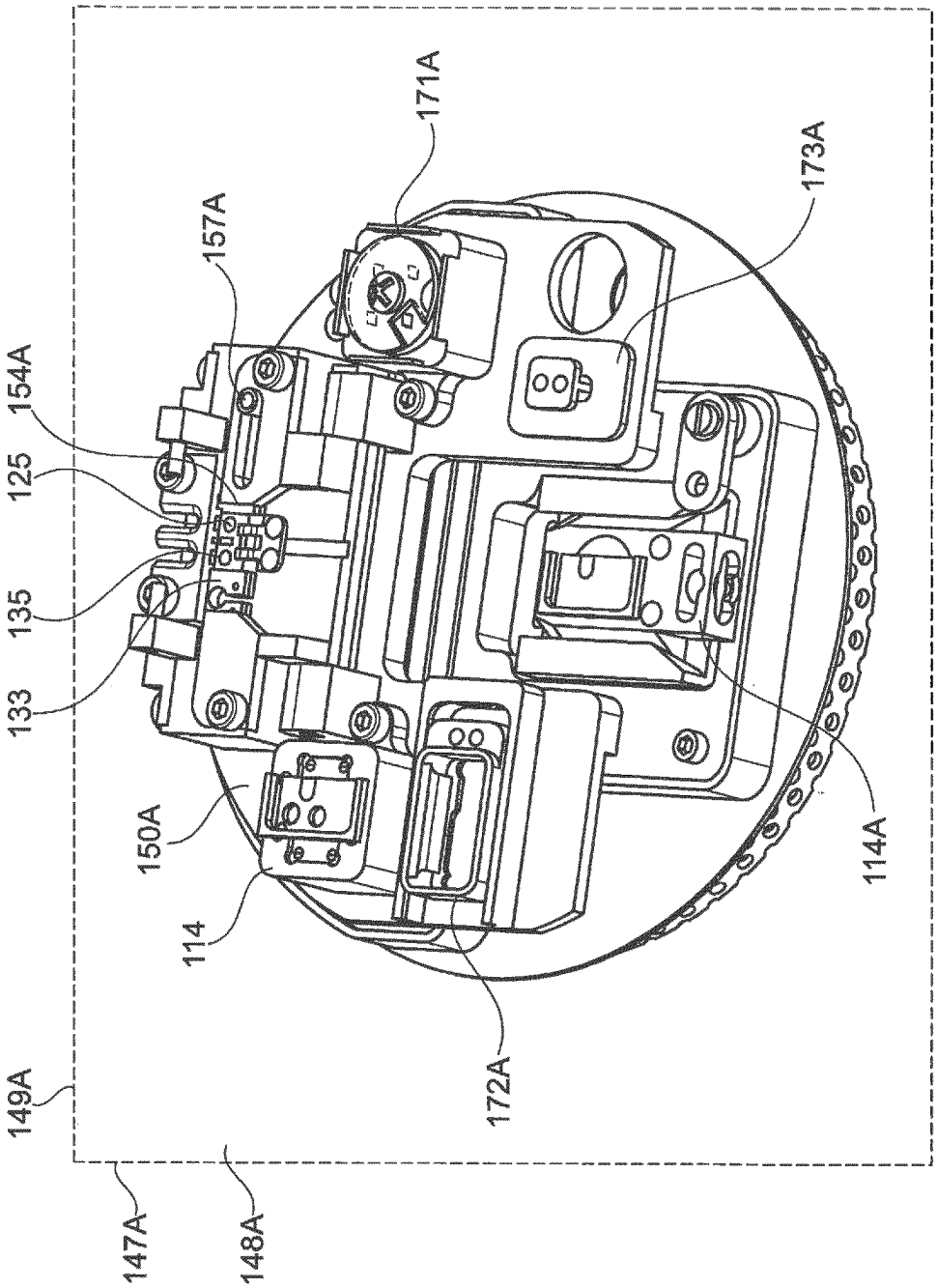
171A
173A
157A
154A
125
135
133
150A
114
149A
172A
114A
147A
148A

Fig. 24

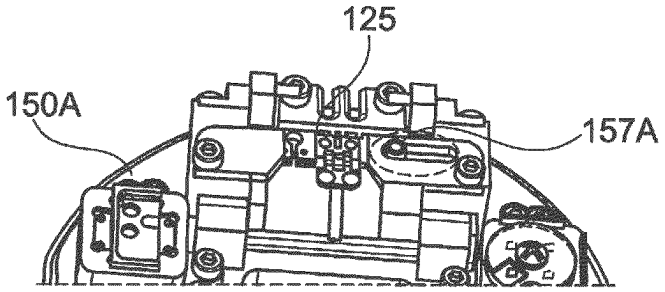

Fig. 25

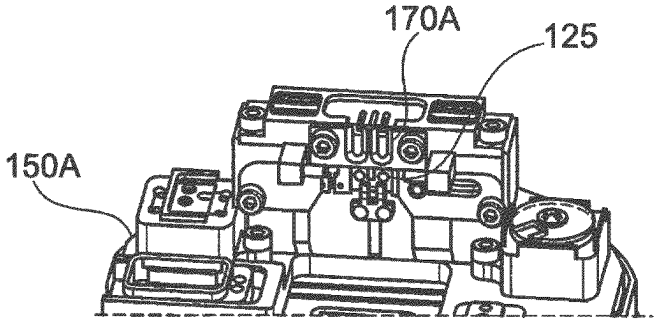

Fig. 26

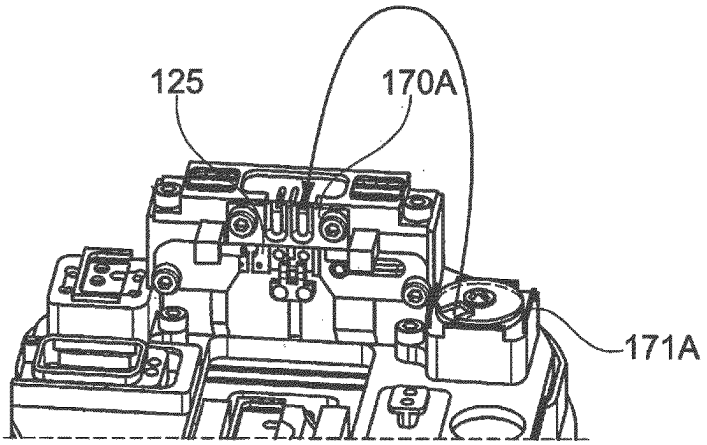

Fig. 27

EXAMINING, ANALYZING AND/OR PROCESSING AN OBJECT USING AN OBJECT RECEIVING CONTAINER

CROSS-REFERENCE TO RELATED APPLICATION

This application is a divisional application of U.S. patent application Ser. No. 17/160,679, filed on Jan. 28, 2021, which claims the priority of the German patent application No. 10 2020 102 314.6, filed on Jan. 30, 2020, both of which are incorporated herein by reference.

TECHNICAL FIELD

The system described herein relates to an object receiving container for receiving at least one object which is examinable, analyzable and/or processable at cryo-temperatures. Further, the system described herein relates to an object holding system comprising an object receiving container. Moreover, the system described herein relates to a beam apparatus and/or an apparatus for processing an object, comprising an object receiving container or comprising an object holding system. By way of example, the beam apparatus is embodied as a light beam apparatus and/or as a particle beam apparatus and/or as an x-ray beam apparatus. By way of example, the apparatus for processing the object is a microtome. Further, the system described herein relates to a method for examining, analyzing and/or processing an object using an object receiving container or an object holding system.

BACKGROUND OF THE INVENTION

The practice of examining and/or analyzing objects by light microscopy has been known for a long time. In light microscopy, use is made of a light microscope which may comprise a beam generator for generating a light beam, an objective lens for focusing the light beam onto the object and a display device for displaying an image and/or an analysis of the object. By way of example, the display device is embodied as an eyepiece.

Further, the practice of examining objects with electron beam apparatuses has been known for a long time. By way of example, electron beam apparatuses, in particular a scanning electron microscope (also referred to as SEM below) and/or a transmission electron microscope (also referred to as TEM below), are used to examine objects (samples) in order to obtain knowledge in respect of the properties and the behavior under certain conditions.

In an SEM, an electron beam (also referred to as primary electron beam below) is generated by means of a beam generator and focused onto an object to be examined by way of a beam guiding system. The primary electron beam is guided in a scanning manner over a surface of the object to be examined by means of a deflection device in the form of a scanning device. Here, the electrons of the primary electron beam may interact with the object to be examined. As a consequence of the interaction, in particular, electrons are emitted by the object (so-called secondary electrons) and electrons of the primary electron beam are backscattered (so-called backscattered electrons). The secondary electrons and backscattered electrons are detected and used for image generation. An imaging of the object to be examined is thus obtained.

In the case of a TEM, a primary electron beam is likewise generated by means of a beam generator and guided onto an object to be examined by means of a beam guiding system. The primary electron beam may pass through the object to be examined. When the primary electron beam passes through the object to be examined, the electrons of the primary electron beam may interact with the material of the object to be examined. The electrons passing through the object to be examined are imaged onto a luminescent screen or onto a detector (for example a camera) by a system consisting of an objective and a projection unit. Here, imaging may also take place in the scanning mode of a TEM. As a rule, such a TEM is referred to as STEM. Additionally, provision can be made for detecting electrons backscattered at the object to be examined and/or secondary electrons emitted by the object to be examined by means of a further detector in order to image an object to be examined.

Furthermore, it is known from the prior art to use combination apparatuses for examining objects, wherein both electrons and ions can be guided onto an object to be examined. By way of example, it is known to equip an SEM additionally with an ion beam column. An ion beam generator arranged in the ion beam column may generate ions that are used for preparing an object (for example removing material of the object or applying material to the object) or else for imaging. For this purpose, the ions are scanned over the object by means of a deflection device in the form of a scanning device. The SEM may serve here in particular for observing the preparation, but also for further examination of the prepared or unprepared object.

The practice of arranging an object to be examined with a particle beam apparatus on an object holder, which in turn is arranged on an object stage, is known. The object stage is arranged in a sample chamber of the particle beam apparatus. The object stage has a movable embodiment, the movable embodiment of the object stage being ensured by a plurality of movement units, from which the object stage is assembled. The movement units facilitate a movement of the object stage in at least one specified direction. Object stages that have a plurality of translational movement units (e.g., approximately 3 to 4 translational movement units) and a plurality of rotational movement units (e.g., 2 to 3 rotational movement units), in particular, are known. By way of example, an object stage which is movably arranged along a first translation axis (for example, an x-axis), along a second translation axis (for example, a y-axis), and along a third translation axis (for example, a z-axis) is known. The first translation axis, the second translation axis and the third translation axis are oriented perpendicular to one another. Further, the known object stage is embodied to be rotatable about a first axis of rotation and about a second axis of rotation, which is aligned perpendicular to the first axis of rotation.

The driving force for a movement by means of the movement units is provided by stepper motors in the prior art. A respective stepper motor is provided for a respective movement along one of the translation axes or for a rotation about one of the axes of rotation. The stepper motors are arranged in the sample chamber of the particle beam apparatus or outside of the sample chamber of the particle beam apparatus. In the latter case, vacuum feed-throughs and mechanical devices are provided to ensure the actuation of the object stage by the stepper motors.

The prior art has further disclosed the examination of a frozen object using a light microscope and/or a particle beam apparatus. By way of example, this is advantageous when examining biological objects. To this end, the frozen object is arranged on an object holder, which is able to be cooled. By way of example, the object holder is able to be

cooled to a temperature of −140° C. or less than −140° C. using liquid nitrogen or liquid helium. Both above and below, temperatures of below −50° C. are referred to as cryo-temperatures. The aforementioned object holder is arranged at the object stage of a light microscope or a particle beam apparatus.

By way of example, object holders are known from DE 11 2010 001 712 B4 and CN 209388997 U.

The practice of examining, analyzing and/or processing a frozen object using not only one apparatus but multiple apparatuses is known. By way of example, the frozen object is initially examined and/or processed using a light microscope and subsequently examined and/or processed using an SEM and/or an ion beam apparatus. In the process, it is necessary to ensure that the frozen object, which is arranged at an object holder, is safely transported from a first apparatus to a second apparatus. Further, it is necessary to ensure that the object holder facilitates, over a relatively long period of time, for example over a plurality of days or months, a secure storage of the frozen object to be examined. The above statement additionally or alternatively also applies to apparatuses used to mechanically process a frozen object, for example a microtome and/or a laser beam apparatus for cutting the frozen object. The above statement further additionally or alternatively applies to apparatuses used to apply layers to a frozen object, for example a sputtering apparatus for applying layers or an apparatus for electron beam-induced deposition of layers, for example using a gas, or for ion beam-induced deposition of layers, for example using a gas.

However, it was found that there always is the risk of a frozen object being contaminated during the examination, the analysis, the processing and/or a transportation of said frozen object, for example by the deposition of atmospheric water on the frozen object. There also is the risk of water deposition on a frozen object when the frozen object is stored, for example, in liquid nitrogen, in particular as a result of a deposition of water crystals, which swim in the liquid nitrogen, on the object to be examined. Contaminations can also be deposited on a frozen object in the case where the fully prepared frozen object remains in a sample chamber of a beam apparatus for a relatively long period of time. A layer of water forming on the frozen object makes an examination, an analysis and/or processing of the frozen object with a light microscope and/or a particle beam apparatus more difficult.

Moreover, it is known that light microscopes and/or particle beam apparatuses from different manufacturers respectively require very specific configurations of an object holder; otherwise, the object holder cannot be arranged at a certain light microscope or in the sample chamber of a specific particle beam apparatus. Expressed differently, a first object holder, for example, provided for a first particle beam apparatus is not suitable for reception in a second particle beam apparatus or in a light microscope on account of the physical configuration of said object holder. In this case, the prior art provides for a frozen object to be examined to be removed from the first object holder and to be arranged at a second object holder which, on account of the physical configuration thereof, is suitable for reception in the second particle beam apparatus or in the light microscope. This is quite inconvenient and often leads to, firstly, a contamination of the object and, secondly, damage to the object. Further, it was found that maintaining the orientation of a frozen object, which may be important for examining and processing the frozen object, is only possible with great difficulties.

It therefore may be desirable to have a device for holding and transporting a frozen object, which allows safe and simple transportation between two examination apparatuses and which is able to be arranged in as many different examination apparatuses and/or processing apparatuses as possible. Further, the device should facilitate secure storage of the frozen object.

SUMMARY OF THE INVENTION

In some embodiments of the system described herein, the object receiving container is configured to receive at least one object which is examinable, analyzable and/or processable at cryo-temperatures. The object receiving container may comprise at least one first container unit. At least one cavity for receiving the object may be arranged at the first container unit. By way of example, a plurality of cavities for receiving an object each may be arranged at the first container unit. In some embodiments, a first cavity for receiving a first object and a second cavity for receiving a second object may be arranged at the first container unit.

Further, in some embodiments of the system described herein, the object receiving container may comprise at least one second container unit, which may be embodied to be movable relative to the first container unit. Expressed differently, the first container unit and/or the second container unit may have such a movable embodiment that the second container unit adopts different positions relative to the first container unit. The second container unit may be able to be brought into a first position and/or into a second position relative to the first container unit. In the second position of the second container unit, the second container unit may cover the cavity arranged at the first container unit or the cavities arranged at the first container unit. Expressed differently, the cavity arranged at the first container unit, and hence the object arranged in the cavity, may not be accessible on account of the cavity being covered by the second container unit situated in the second position. By contrast, if the second container unit is situated in the first position relative to the first container unit, the cavity and the object arranged therein may be accessible. If a plurality of cavities are arranged at the first container unit, then the cavities arranged at the first container unit, and hence the objects arranged in the cavities, may not be accessible on account of the cavities being covered by the second container unit situated in the second position. By contrast, if the second container unit is situated in the first position relative to the first container unit, the cavities and the objects arranged therein may be accessible.

Further, in some embodiments of the system described herein, the object receiving container may comprise at least one fastening device which is arranged at the first container unit or at the second container unit, for the purposes of arranging the object receiving container at a holding device. The holding device may be an adapter device, for example, which is arrangeable at a receiving device of a beam apparatus and/or an apparatus for processing an object and/or a mounting device. Expressed differently, the holding device may be an adapter device, for example, which can be arranged at a receiving device of the beam apparatus and/or the apparatus for processing an object and/or the mounting device.

In some embodiments of the system described herein, the object receiving container allows safe and simple transportation between two examination apparatuses. In particular, the object receiving container may be configured to ensure protection against contamination of the object arranged in

the cavity on account of the relative movement of the second container unit with respect to the first container unit into the second position and on account of the cover obtained therewith. Moreover, the object receiving container may be configured to ensure that the object can be stored safely over a relatively long period of time, for example multiple days or months. Since the object may not need be removed from the object receiving container during storage, for example in a nitrogen-cooled storage container, the orientation of the object in the object receiving container may not change. This orientation may simplify a subsequent examination of the object by means of an examination apparatus since the object receiving container may be insertable into the examination apparatus after removing the object receiving container from the storage container, with the orientation of the object already known. Information about the alignment and orientation of the object may be arranged at the object receiving container by means of a marking. Further, in some embodiments, the object receiving container may ensure that the latter can be arranged in as many different examination apparatuses as possible. By way of example, the object receiving container according to the invention may be arrangeable at a holding device in the form of an adapter device. The adapter device may be configured in such a way that the object receiving container may be arranged at a receiving device of a respective beam apparatus and/or an apparatus for processing an object and/or a mounting device by means of the adapter device. In contrast to the prior art, the system described herein may make it possible for the object to not have to be arranged at respective different object holders, which have a physical configuration specified for a respective apparatus, for the purposes of examining and/or processing an object in different apparatuses. Rather, the system described herein may provide for the object to be arranged only once at the object receiving container, which is then receivable in the various examination apparatuses.

The aforementioned holding device may have any suitable configuration. By way of example, the holding device may have an angled surface, at which the object receiving container may be arranged. As a result, it may no longer be mandatory for the holding device, and hence also the object receiving container, to be rotated about an axis of rotation, for example in a sample chamber of a particle beam apparatus. Moreover, the holding device may comprise at least one receptacle for receiving actuation devices, in particular manipulators, by means of which the holding device may be moved.

In one embodiment of the object receiving container according to the system described herein, the second container unit may be arranged at a displacing device in such a way that the second container unit is able to be displaced into the first position and/or into the second position relative to the first container unit. Expressed differently, the first container unit and/or the second container unit may be displaceable such that the second container unit may be arranged in the first position and/or in the second position relative to the first container unit. The second container unit may cover the cavity arranged at the first container unit when the second container unit is in the second position relative to the first container unit. If a plurality of cavities are arranged at the first container unit, the second container unit may cover the cavities arranged at the first container unit. By contrast, if the second container unit is situated in the first position relative to the first container unit, the cavity and the object arranged therein may be accessible. If a plurality of cavities are arranged at the first container unit, then the cavities and the objects arranged therein may be accessible. In a further embodiment, the second container unit may be embodied as a displacing device.

In a further embodiment of the object receiving container according to the system described herein, the object receiving container may comprise at least one hinge device which is arranged both at the first container unit and at the second container unit in such a way that the second container unit is able to be brought into the first position and/or into the second position relative to the first container unit. Expressed differently, the first container unit and/or the second container unit may be embodied to be movable in such a way on account of the hinge device that the second container unit may be arranged in the first position and/or in the second position relative to the first container unit. The second container unit may cover the cavity arranged at the first container unit when the second container unit is in the second position relative to the first container unit. If a plurality of cavities are arranged at the first container unit, the second container unit may cover the cavities arranged at the first container unit. By contrast, if the second container unit is situated in the first position relative to the first container unit, the cavity and the object arranged therein may be accessible. If a plurality of cavities are arranged at the first container unit, then the cavities and the objects arranged therein may be accessible.

In one embodiment of the object receiving container according to the system described herein, the second container unit may be rotatable into the first position and/or into the second position relative to the first container unit. By way of example, the second container unit may be rotatable about a surface normal of the first container unit and/or the second container unit into the first position and/or into the second position relative to the first container unit.

In a further embodiment of the object receiving container according to the system described herein, the second container unit may have at least one through hole. By way of example, the second container unit may be embodied as a perforated panel, i.e., as a panel with at least one through hole. In the first position of the second container unit relative to the first container unit, the through hole may be arranged at the cavity such that the cavity and the object arranged therein are accessible. If a plurality of cavities are arranged in the first container unit, then the cavities and the objects arranged therein may be accessible, the through hole being arranged at the cavities or each cavity of the plurality of cavities having a respective through hole arranged thereagainst.

In an even further embodiment of the object receiving container according to the system described herein, the second container unit may be embodied as a leaf shutter. The leaf shutter may comprise movably embodied blades, which may be movable into the first position and/or into the second position.

In yet a further embodiment of the object receiving container according to the system described herein, the fastening device may comprise at least one spring device. By way of example, the fastening device may be embodied as a spring device. For example, the fastening device may comprise at least one snap ring and/or to be embodied as a snap ring. The embodiment of the fastening device as a spring device may be simple in terms of design and therefore cost-effective in terms of production.

In an even further embodiment of the object receiving container according to the system described herein, the fastening device may comprise a clamping device or to be embodied as a clamping device. For example, the fastening

device may have a first clamping part and a second clamping part. In addition or as an alternative thereto, the fastening device may comprise a screw and/or an eccentric disk, wherein the screw and/or the eccentric disk may be used to clamp the object receiving container at a holding device. The embodiment of the fastening device as a clamping device likewise may be simple in terms of design and therefore cost-effective in terms of production.

In one embodiment of the object receiving container according to the system described herein, the fastening device may have at least one first spring end and at least one second spring end. The first spring end and the second spring end may be arranged at a distance from one another. Further, the first spring end may be embodied so as to be movable relative to the second spring end. Expressed differently, the first spring end and/or the second spring end may have a movable embodiment. This may ensure that the object receiving container according to the invention may be held in clamping fashion at the holding device and is easily detachable from the holding device again.

In a further embodiment of the object receiving container according to the system described herein, the first spring end may have a first engagement opening for the engagement of an actuation tool and the second spring end may have a second engagement opening for the engagement of the actuation tool. This arrangement may ensure a simple operation of the fastening device in the form of the spring device, so that the object receiving container according to the system described herein is able to be easily mounted on the holding device and is easily detachable from the holding device again.

In yet a further embodiment of the object receiving container according to the system described herein, the first container unit may have a first surface, wherein the first surface is arranged in a first plane. Further, the second container unit may have a second surface, wherein the second surface is arranged in a second plane. Moreover, the first surface of the first container unit may rest against the second surface of the second container unit in the second position of the second container unit relative to the first container unit such that the cavity arranged at the first container unit is covered by the second surface of the second container unit. If a plurality of cavities are arranged at the first container unit, then these cavities may be covered by the second surface of the second container unit. By contrast, in the first position of the second container unit relative to the first container unit, the first surface of the first container unit may be arranged with respect to the second surface of the second container unit in such a way that the first plane is aligned with respect to the second plane as follows: (i) the first plane is aligned parallel to the second plane or (ii) the first plane is identical to the second plane or (iii) the first plane is aligned at an angle of more than 5° with respect to the second plane.

In an even further embodiment of the object receiving container according to the system described herein, the cavity may have at least one first cavity opening and at least one second cavity opening. If a plurality of cavities are arranged at the first container unit, at least one of the cavities may have a first cavity opening and a second cavity opening. In one embodiment, a plurality of cavities each may have a first cavity opening and a second cavity opening. The second container unit may cover the first cavity opening or the first cavity openings when the second container unit is in the second position relative to the first container unit. Moreover, a covering device for covering the second cavity opening or the second cavity openings may be arranged at the second cavity opening or at the second cavity openings. The openings of the cavity may be covered by different units in this embodiment. The first cavity opening may be covered by the second container unit. By contrast, the second cavity opening may be covered by the covering device. If a plurality of first cavity openings and a plurality of second cavity openings are present, the plurality of first cavity openings may be covered by the second container unit. By contrast, the plurality of second cavity openings may be covered by the covering device. In a further embodiment, the plurality of second cavity openings each may have a covering device, said covering devices being used to cover the respective second cavity openings.

In one embodiment of the object receiving container according to the system described herein, the first cavity opening and the second cavity opening may be arranged opposite one another. For example, the covering device may be embodied as a sliding device. Expressed differently, the covering device may be displaceable relative to the second cavity opening such that the covering device is able to be brought into a covering position and into an exposing position. The second cavity opening may be covered by the covering device in the covering position. In the exposing position, the object may be accessible through the second cavity opening. If a plurality of cavities, which each have a first cavity opening and each have a second cavity opening, are arranged at the first container unit, then provision may be made in this embodiment for the covering device to be displaceable relative to the second cavity openings in such a way that the covering device is able to be brought into a covering position and into an exposing position. The second cavity openings may be covered by the covering device in the covering position. The objects arranged in the cavities may be accessible through the second cavity openings in the exposing position. If a respective covering device is arranged at a respective second cavity opening, then provision may be made in this embodiment for the respective covering device to be displaceable relative to the respective second cavity opening in such a way that the respective covering device may be able to be brought into a covering position and into an exposing position. The respective second cavity opening may be covered by the respective covering device in the covering position. In the exposing position, the object arranged in the respective cavity may be accessible through the respective second cavity opening. The aforementioned embodiments may be advantageous if examinations of the object are carried out, within the scope of which particles of a particle beam may be transmitted through the object and/or interaction particles which arise on account of an interaction of a particle beam with the object may emerge from the object at a side of the object arranged at the second cavity opening. The transmitted particles and/or the interaction particles may then be detected by a detector.

The system described herein also may relate to an object holding system comprising at least one object receiving container, having at least one of the features specified further above or yet to be specified below or a combination of at least two of the features specified further above or yet to be specified below. Moreover, the object holding system according to the system described herein may be provided with at least one holding device which may comprise a receptacle. The fastening device of the object receiving container may be arrangeable at the receptacle. The holding device is, for example, an adapter device, which is arrangeable at a receiving device of a beam apparatus and/or an apparatus for processing an object and/or a mounting device.

The adapter device may be configured in such a way that the object receiving container may be arranged at the receiving device of the respective beam apparatus and/or the respective apparatus for processing an object and/or the respective mounting device by means of the adapter device. In contrast to the prior art, the invention therefore renders it possible that an object to be examined need not be arranged multiple times at different object holders; instead, said object may be arranged a single time at the object receiving container according to the invention, which then may be receivable in different examination apparatuses.

The aforementioned holding device of the object holding system according to the system described herein may have any suitable configuration. By way of example, the holding device may have an angled surface, at which the object receiving container is arranged. As a result, it may no longer be mandatory for the holding device, and hence also the object receiving container, to be rotated about an axis of rotation, for example in a sample chamber of a particle beam apparatus. Moreover, the holding device may comprise receptacles for receiving actuation devices, in particular manipulators, by means of which the holding device may be moved.

The system described herein also may relate to a beam apparatus for imaging, analyzing and/or processing an object. The beam apparatus according to the system described herein may comprise at least one beam generator for generating a beam, at least one objective lens for focusing the beam onto the object, at least one display device for displaying an image and/or an analysis of the object and at least one cooling device for cooling the object to cryo-temperatures. By way of example, liquid nitrogen or liquid helium is arranged in the cooling device. Moreover, the beam apparatus according to the invention is provided with an object receiving container, having at least one of the features specified further above or yet to be specified below or a combination of at least two of the features specified further above or yet to be specified below. As an alternative thereto, the beam apparatus may comprise at least one object holding system having at least one of the features specified further above or yet to be specified below or a combination of at least two of the features specified further above or yet to be specified below.

In one embodiment of the beam apparatus according to the system described herein, the beam apparatus is embodied as a particle beam apparatus. Then, the beam generator may be embodied as a beam generator for generating a particle beam with charged particles. The charged particles may be electrons or ions, for example. The objective lens of the particle beam apparatus according to the invention may serve to focus the particle beam onto the object. Moreover, the particle beam apparatus according to the system described herein may comprise at least one scanning device for scanning the particle beam over the object. Further, the particle beam apparatus according to the system described herein may comprise at least one detector for detecting interaction particles and/or interaction radiation which may emerge from an interaction between the particle beam and the object when the particle beam is incident on the object.

In one embodiment of the particle beam apparatus according to the system described herein, the beam generator is embodied as a first beam generator and the particle beam is embodied as a first particle beam comprising first charged particles. Further, the objective lens may be embodied as a first objective lens for focusing the first particle beam onto the object. Moreover, the particle beam apparatus according to the system described herein may comprise at least one second beam generator for generating a second particle beam comprising second charged particles. Further, the particle beam apparatus according to the system described herein may comprise at least one second objective lens for focusing the second particle beam onto the object.

In particular, the beam apparatus may be embodied as an electron beam apparatus and/or as an ion beam apparatus.

In an even further embodiment of the beam apparatus according to the system described herein, the beam apparatus may be a light beam apparatus. Consequently, the beam generator may be embodied to generate light beams.

The system described herein also may relate to an apparatus for processing an object, comprising at least one processing device for processing the object and at least one cooling device for cooling the object to cryo-temperatures. Moreover, the apparatus according to the system described herein may be provided with an object receiving container arranged at the cooling device and having at least one of the features specified further above or yet to be specified below or a combination of at least two of the features specified further above or yet to be specified below. As an alternative thereto, the apparatus may comprise at least one object holding system arranged at the cooling device and having at least one of the features specified further above or yet to be specified below or a combination of at least two of the features specified further above or yet to be specified below. By way of example, the processing device is embodied as a mechanical cutting device and/or as a laser cutting device and/or as a device for electron beam-induced deposition of layers on the object, for example using a gas, and/or as a device for ion beam-induced deposition of layers on the object, for example using a gas, and/or as a sputtering apparatus.

The system described herein also may relate to a method for examining, analyzing and/or processing an object at cryo-temperatures, having any one of the following steps: (i) using an object receiving container having one of the features specified further above or yet to be specified below or a combination of at least two of the features specified further above or yet to be specified below; (ii) using an object holding system having one of the features specified further above or yet to be specified below or a combination of at least two of the features specified further above or yet to be specified below; (iii) using a beam apparatus having one of the features specified further above or yet to be specified below or a combination of at least two of the features specified further above or yet to be specified below; or (iv) using an apparatus for processing an object having one of the features specified further above or yet to be specified below or a combination of at least two of the features specified further above or yet to be specified below.

In one embodiment of the method according to the system described herein, the method may include the following steps:

moving the second container unit relative to the first container unit in such a way that the second container unit adopts the first position relative to the first container unit and that the cavity arranged at the first container unit or the cavities arranged at the first container unit is/are accessible. Expressed differently, the first container unit and/or the second container unit may be moved in such a way that the second container unit adopts the first position relative to the first container unit such that the cavity arranged at the first container unit or the cavities arranged at the first container unit is/are accessible. By way of example, the first container unit and/or the second container unit may

be moved by means of a tool. In addition or as an alternative thereto, the object receiving container may be moved in such a way that the first container unit and/or the second container unit move/moves on account of gravity such that the second container unit is brought into the first position relative to the first container unit;

arranging the object in the cavity or arranging a respective object in a respective cavity of the plurality of cavities. By way of example, an object may be arranged in a cavity of the first container unit with the aid of a mounting device. By way of example, the mounting device has an interior, which may be surrounded by an insulated wall. By way of example, a holder for the object receiving container may be arranged in the interior. By filling the interior, for example with liquid nitrogen or liquid helium, the holding device and the object receiving container may be cooled to cryo-temperatures such that the object may be arranged in the cavity under cryo-temperatures;

moving the second container unit relative to the first container unit in such a way that the second container unit adopts the second position and that the cavity arranged in the first container unit or the cavities arranged in the first container unit is/are covered by the second container unit. Expressed differently, the first container unit and/or the second container unit may be moved in such a way that the second container unit adopts the second position relative to the first container unit such that the cavity arranged at the first container unit or the cavities arranged at the first container unit is/are covered by the second container unit. By way of example, the first container unit and/or the second container unit may be moved by means of a tool. In addition or as an alternative thereto, the object receiving container may be moved in such a way that the first container unit and/or the second container unit move/moves on account of gravity such that the second container unit is brought into the second position relative to the first container unit;

arranging the object receiving container at the holding device of the object holding system by arranging the fastening device of the object receiving container at the receptacle of the holding device in such a way that the fastening device is held at the receptacle. By way of example, a spring device may be used as fastening device. In particular, the fastening device may comprise at least one snap ring and/or may be embodied as a snap ring. Further the spring device may have a first spring end and a second spring end. The first spring end and the second spring end may be arranged at a distance from one another. Further, the first spring end may be embodied so as to be movable relative to the second spring end. By way of example, the first spring end has a first engagement opening for the engagement of an actuation tool and the second spring end has a second engagement opening for the engagement of the actuation tool. This arrangement may ensure a simple operation of the spring device such that the object receiving container according to the system described herein is able to be easily assembled at the holding device, is held at the holding device in clamping fashion and maybe easily released from the holding device again. In addition or as an alternative thereto, the fastening device may comprise a clamping device or be embodied as a clamping device such that the object receiving container is held at the holding device of the object holding system in clamping fashion. In particular, to this end, the fastening device may have a first clamping part and a second clamping part. In addition or as an alternative thereto, the fastening device may comprise a screw and/or an eccentric disk, wherein the screw and/or the eccentric disk may be used to clamp the object receiving container at the holding device;

introducing the holding device of the object holding system into the beam apparatus or the apparatus for processing the object;

arranging the holding device at the cooling device of the beam apparatus or of the apparatus for processing the object;

moving the second container unit relative to the first container unit in such a way that the second container unit adopts the first position and that the object arranged in the cavity or the objects arranged in the cavities is/are accessible. Expressed differently, the first container unit and/or the second container unit may be moved in such a way that the second container unit adopts the first position relative to the first container unit such that the cavity arranged at the first container unit or the cavities arranged at the first container unit is/are accessible. By way of example, the first container unit and/or the second container unit may be moved by means of a tool. In addition or as an alternative thereto, the object receiving container may be moved in such a way that the first container unit and/or the second container unit move/moves on account of gravity such that the second container unit is brought into the first position relative to the first container unit; and

examining, analyzing and/or processing the object using the beam apparatus or the apparatus for processing the object.

In an even further embodiment of the method according to the system described herein, the method may include the following steps:

arranging the holding device at a transportation device. By way of example, the transportation device may be a device which is movable by means of a manipulator and which may be movable from a workstation arranged at the beam apparatus or the apparatus for processing the object into a sample chamber of the beam apparatus or of the apparatus for processing the object. By way of example, such a transportation device may be referred to as a "shuttle";

introducing the transportation device into the beam apparatus or the apparatus for processing the object; and

arranging the transportation device at the cooling device.

In yet a further embodiment of the method according to the system described herein, the method may include the following step: moving the covering device in relative fashion for covering or exposing the second cavity opening or second cavity openings.

Explicit reference is made to the fact that the temporal sequence of individual steps of the method according to the system described herein is able to be chosen freely. Accordingly, the method according to the system described herein is not restricted to the aforementioned sequence of the steps of the method according to the system described herein.

Embodiments of: the object receiving container according to the system described herein, the object holding system according to the system described herein, the beam apparatus according to the system described herein and/or the apparatus for processing the object according to the system described herein and/or the method according to the system described herein may ensure that an object arranged in the

object receiving container according to the system described herein is easily examinable, analyzable and/or processable under cryo-temperatures using different work processes. By way of example, the object receiving container according to embodiments of the system described herein may be used to examine and/or analyze the object by means of x-ray spectroscopy, by means of near field scanning microscopy, by means of atomic force microscopy, by means of a combination apparatus having an ion beam apparatus and an electron beam apparatus, by means of transmission electron microscopy, by means of Raman spectroscopy and/or by means of secondary ion mass spectrometry. In addition or as an alternative thereto, the object receiving container according to embodiments of the system described herein may be used when polishing the object, when cutting the object by means of a blade or a laser and/or when applying materials to the object. The aforementioned lists should be understood to be illustrative. The object receiving container according to embodiments of the system described herein may be used for any desired and suitable method.

By way of example, the beam apparatus according to embodiments of the system described herein, as explained further above or yet to be explained below, or the apparatus according to embodiments of the system described herein for processing the object may comprise a processor. Loaded onto the processor may be a computer program product which controls the beam apparatus or the apparatus for processing the object in such a way that the method according to embodiments of the system described herein having one of the features specified further above or yet to be specified below or a combination of at least two of the features specified further above or yet to be specified below is carried out.

BRIEF DESCRIPTION OF THE DRAWINGS

The system described herein will be explained in more detail below on the basis of embodiments using drawings. In detail:

FIG. **1** shows a first embodiment of a particle beam apparatus of the system described herein;

FIG. **2** shows a second embodiment of a particle beam apparatus of the system described herein;

FIG. **3** shows a third embodiment of a particle beam apparatus of the system described herein;

FIG. **4** shows a schematic illustration of a light microscope, according to an embodiment of the system described herein;

FIG. **4**A shows a schematic illustration of an apparatus for processing an object, according to an embodiment of the system described herein;

FIG. **5** shows a schematic illustration of an embodiment of an object stage with a movable embodiment for a particle beam apparatus and/or a light microscope and/or an apparatus for processing the object, according to an embodiment of the system described herein;

FIG. **6** shows a further schematic illustration of the object stage according to FIG. **5**, according to an embodiment of the system described herein;

FIG. **7** shows a first schematic illustration of an object receiving container, according to an embodiment of the system described herein;

FIG. **8** shows a second schematic illustration of the object receiving container according to FIG. **7**, according to an embodiment of the system described herein;

FIG. **9** shows a third schematic illustration of the object receiving container according to FIG. **7**, according to an embodiment of the system described herein;

FIG. **10** shows a fourth schematic illustration of the object receiving container according to FIG. **7**, according to an embodiment of the system described herein;

FIG. **11** shows a schematic illustration of a further object receiving container, according to an embodiment of the system described herein;

FIG. **12** shows a first schematic illustration of a mounting device for an object receiving container, according to an embodiment of the system described herein;

FIG. **13** shows a second schematic illustration of the mounting device according to FIG. **12**, according to an embodiment of the system described herein;

FIG. **14** shows a third schematic illustration of the mounting device according to FIG. **12** in a sectional view, according to an embodiment of the system described herein;

FIG. **15** shows a fifth schematic illustration of the object receiving container according to FIG. **7**, according to an embodiment of the system described herein;

FIG. **16** shows a schematic illustration of a first embodiment of a holding device for the object receiving container of the system described herein;

FIG. **17** shows a schematic illustration of a second embodiment of a holding device for the object receiving container of the system described herein;

FIG. **18** shows a further schematic illustration of the first embodiment of a holding device for the object receiving container of the system described herein according to FIG. **16**;

FIG. **19** shows a schematic illustration of a third embodiment of a holding device for the object receiving container of the system described herein;

FIG. **20** shows a schematic illustration of a flowchart of a first embodiment of the method according to the system described herein;

FIG. **21** shows a schematic illustration of a flowchart of a second embodiment of the method according to the system described herein;

FIG. **22** shows a schematic illustration of a flowchart of a third embodiment of the method according to the system described herein;

FIG. **23** shows a schematic illustration of a flowchart of a fourth embodiment of the method according to the system described herein;

FIG. **24** shows a schematic illustration of a further mounting device for an object receiving container, according to an embodiment of the system described herein;

FIG. **25** shows a schematic illustration of a first partial view of the further mounting device according to FIG. **24**, according to an embodiment of the system described herein;

FIG. **26** shows a schematic illustration of a second partial view of the further mounting device according to FIG. **24**, according to an embodiment of the system described herein; and

FIG. **27** shows a schematic illustration of a third partial view of the further mounting device according to FIG. **24**, according to an embodiment of the system described herein.

DESCRIPTION OF VARIOUS EMBODIMENTS

The system described herein is now explained in more detail by means of particle beam apparatuses in the form of an SEM and in the form of a combination apparatus, which has an electron beam column and an ion beam column. Reference is explicitly made to the fact that the system

described herein may be used in any particle beam apparatus, in particular in any electron beam apparatus and/or any ion beam apparatus. Further, the system described herein will be explained in more detail on the basis of a light microscope and an apparatus for processing an object.

FIG. **1** shows a schematic illustration of an SEM **100**. The SEM **100** may comprise a first beam generator in the form of an electron source **101**, which may be embodied as a cathode. Further, the SEM **100** may be provided with an extraction electrode **102** and with an anode **103**, which may be placed onto one end of a beam guiding tube **104** of the SEM **100**. By way of example, the electron source **101** may be embodied as a thermal field emitter. However, the system described herein is not restricted to such an electron source **101**. Rather, any electron source is utilizable.

Electrons emerging from the electron source **101** may form a primary electron beam. The electrons may be accelerated to the anode potential on account of a potential difference between the electron source **101** and the anode **103**. In the embodiment illustrated here, the anode potential may be 100 V to 35 kV, e.g. 5 kV to 15 kV, in particular 8 kV, relative to a ground potential of a housing of a sample chamber **120**. However, alternatively it also may be at ground potential.

Two condenser lenses, specifically a first condenser lens **105** and a second condenser lens **106**, may be arranged at the beam guiding tube **104**. Here, proceeding from the electron source **101** as viewed in the direction of a first objective lens **107**, the first condenser lens **105** may be arranged first, followed by the second condenser lens **106**. Reference is explicitly made to the fact that further embodiments of the SEM **100** may have only a single condenser lens. A first aperture unit **108** may be arranged between the anode **103** and the first condenser lens **105**. Together with the anode **103** and the beam guiding tube **104**, the first aperture unit **108** may be at a high voltage potential, specifically the potential of the anode **103**, or connected to ground. The first aperture unit **108** may have numerous first apertures **108**A, of which one is illustrated in FIG. **1**. By way of example, two first apertures **108**A are present. Each one of the numerous first apertures **108**A may have a different aperture diameter. By means of an adjustment mechanism (not illustrated), it may be possible to set a desired first aperture **108**A onto an optical axis OA of the SEM **100**. Reference is explicitly made to the fact that, in further embodiments, the first aperture unit **108** may be provided with only a single first aperture **108**A. In this embodiment, an adjustment mechanism may be absent. The first aperture unit **108** then may be designed to be stationary. A stationary second aperture unit **109** may be arranged between the first condenser lens **105** and the second condenser lens **106**. As an alternative thereto, the second aperture unit **109** may be embodied in a movable fashion.

The first objective lens **107** may have pole pieces **110**, in which a hole may be formed. The beam guiding tube **104** may be guided through this hole. A coil **111** may be arranged in the pole pieces **110**.

An electrostatic retardation device may be arranged in a lower region of the beam guiding tube **104**, and may comprise an individual electrode **112** and a tube electrode **113**. The tube electrode **113** may be arranged at one end of the beam guiding tube **104**, which faces an object receiving container **125**. The object receiving container **125** may be arranged at a holding device **114**. An object may be arranged at the object receiving container **125**. This is explained in more detail below.

Together with the beam guiding tube **104**, the tube electrode **113** may be at the potential of the anode **103**, while the individual electrode **112** and an object arranged at the object receiving container **125** may be at a lower potential in relation to the potential of the anode **103**. In the present case, this may be the ground potential of the housing of the sample chamber **120**. In this way, the electrons of the primary electron beam may be decelerated to a desired energy, which may be required for examining the object.

The SEM **100** further may comprise a scanning device **115**, by means of which the primary electron beam may be deflected and scanned over the object. Here, the electrons of the primary electron beam may interact with the object. As a result of the interaction, interaction particles arise, which may be detected. In particular, electrons may be emitted from the surface of the object—so-called secondary electrons—or electrons of the primary electron beam may be backscattered—so-called backscattered electrons—as interaction particles.

The object and the individual electrode **112** may also be at different potentials and potentials different than ground. It is thereby possible to set the location of the retardation of the primary electron beam in relation to the object. If, by way of example, the retardation is carried out quite close to the object, imaging aberrations become smaller.

A detector arrangement comprising a first detector **116** and a second detector **117** may be arranged in the beam guiding tube **104** for detecting the secondary electrons and/or the backscattered electrons. Here, the first detector **116** may be arranged on the source side along the optical axis OA, while the second detector **117** may be arranged on the object side along the optical axis OA in the beam guiding tube **104**. The first detector **116** and the second detector **117** may be arranged offset from one another in the direction of the optical axis OA of the SEM **100**. Both the first detector **116** and the second detector **117** each may have a passage opening, through which the primary electron beam may pass. The first detector **116** and the second detector **117** may be approximately at the potential of the anode **103** and of the beam guiding tube **104**. The optical axis OA of the SEM **100** extends through the respective passage openings.

The second detector **117** may serve principally for detecting secondary electrons. Upon emerging from the object, the secondary electrons initially have a low kinetic energy and arbitrary directions of motion. By means of the strong extraction field emanating from the tube electrode **113**, the secondary electrons may be accelerated in the direction of the first objective lens **107**. The secondary electrons enter the first objective lens **107** approximately parallel. The beam diameter of the beam of the secondary electrons may remain small in the first objective lens **107** as well. The first objective lens **107** then may have a strong effect on the secondary electrons and may generate a comparatively short focus of the secondary electrons with sufficiently steep angles with respect to the optical axis OA, such that the secondary electrons diverge far apart from one another downstream of the focus and strike the second detector **117** on the active area thereof. By contrast, only a small proportion of electrons that may be backscattered at the object—that is to say backscattered electrons which have a relatively high kinetic energy in comparison with the secondary electrons upon emerging from the object—may be detected by the second detector **117**. The high kinetic energy and the angles of the backscattered electrons with respect to the optical axis OA upon emerging from the object may have the effect that a beam waist, that is to say a beam region having a minimum diameter, of the backscattered electrons lies in

the vicinity of the second detector **117**. A large portion of the backscattered electrons may pass through the passage opening of the second detector **117**. Therefore, the first detector **116** substantially may serve to detect the backscattered electrons.

In a further embodiment of the SEM **100**, the first detector **116** may additionally be embodied with an opposing field grid **116**A. The opposing field grid **116**A may be arranged at the side of the first detector **116** directed toward the object. With respect to the potential of the beam guiding tube **104**, the opposing field grid **116**A may have a negative potential such that only backscattered electrons with a high energy pass through the opposing field grid **116**A to the first detector **116**. In addition or as an alternative thereto, the second detector **117** may have a further opposing field grid, which may have an analogous embodiment to the aforementioned opposing field grid **116**A of the first detector **116** and which may have an analogous function.

Further, the SEM **100** may have in the sample chamber **120** a chamber detector **119**, for example an Everhart-Thornley detector or an ion detector, which may have a detection surface that is coated with metal and blocks light.

The detection signals generated by the first detector **116**, the second detector **117** and the chamber detector **119** may be used to generate an image or images of the surface of the object.

Reference is explicitly made to the fact that the apertures of the first aperture unit **108** and of the second aperture unit **109**, as well as the passage openings of the first detector **116** and of the second detector **117**, are illustrated in exaggerated fashion. The passage openings of the first detector **116** and of the second detector **117** may have an extent perpendicular to the optical axis OA in the range of 0.5 mm to 5 mm. By way of example, they are of circular design and may have a diameter in the range of 1 mm to 3 mm perpendicular to the optical axis OA.

The second aperture unit **109** may be configured as a pinhole unit in the embodiment illustrated here and is provided with a second aperture **118** for the passage of the primary electron beam, which may have an extent in the range from 5 μm to 500 μm, e.g., 35 μm. As an alternative thereto, the second aperture unit **109** may be provided with a plurality of apertures, which may be displaced mechanically with respect to the primary electron beam or which may be reached by the primary electron beam by the use of electrical and/or magnetic deflection elements. The second aperture unit **109** may be embodied as a pressure stage unit. This separates a first region, in which the electron source **101** may be arranged and in which an ultra-high vacuum (10^{-7} hPa to 10^{-12} hPa) prevails, from a second region, which may have a high vacuum (10^{-3} hPa to 10^{-7} hPa). The second region may be the intermediate pressure region of the beam guiding tube **104**, which leads to the sample chamber **120**.

The sample chamber **120** may be under vacuum. For the purposes of producing the vacuum, a pump (not illustrated) is arranged at the sample chamber **120**. In the embodiment illustrated in FIG. **1**, the sample chamber **120** may be operated in a first pressure range or in a second pressure range. The first pressure range may comprise only pressures of less than or equal to 10^{-3} hPa, and the second pressure range may comprise only pressures of greater than 10^{-3} hPa. To ensure said pressure ranges, the sample chamber **120** may be vacuum-sealed.

The holding device **114** may be arranged at an object stage **122**. The object stage **122** may be embodied to be movable in three directions arranged perpendicular to one another, specifically in an x-direction (first stage axis), in a y-direction (second stage axis), and in a z-direction (third stage axis). Moreover, the object stage **122** may be rotated about two rotation axes which may be arranged perpendicular to one another (stage rotation axes). The system described herein is not restricted to the object stage **122** described above. Rather, the object stage **122** may have further translation axes and rotation axes along which or about which the object stage **122** may move.

In a further embodiment of the SEM **100**, the holding device **114** may be embodied as an object receiving device, for example in the form of a manipulator and/or a gripper for holding the object receiving container **125**. Then, the holding device **114** may have a movable embodiment, for example as explained above and further below in respect of the object stage **122**.

The SEM **100** further may comprise a third detector **121**, which may be arranged in the sample chamber **120**. More precisely, the third detector **121** may be arranged downstream of the holding device **114** when viewed from the electron source **101** along the optical axis OA. The holding device **114** may be rotated in such a way that the object arranged in the object receiving container **125** may have the primary electron beam radiated therethrough. When the primary electron beam passes through the object to be examined, the electrons of the primary electron beam may interact with the material of the object to be examined. The electrons passing through the object to be examined may be detected by the third detector **121**.

Arranged at the sample chamber **120** may be a radiation detector **500**, which may be used to detect interaction radiation, for example x-ray radiation and/or cathodoluminescence light. The radiation detector **500**, the first detector **116**, the second detector **117**, and the chamber detector **119** may be connected to a control unit **123**, which may comprise a monitor **124**. The third detector **121** also may be connected to the control unit **123**. This is not illustrated for reasons of clarity. The control unit **123** may process detection signals that are generated by the first detector **116**, the second detector **117**, the chamber detector **119**, the third detector **121** and/or the radiation detector **500** and displays said detection signals in the form of images on the monitor **124**.

The control unit **123** may comprise a database **126**, in which the control unit **123** may store data and/or from which data may be loaded onto a processor of the control unit **123**.

Arranged at the holding device **114** may be a cooling and/or heating device **127**, which may be used for cooling and/or heating the holding device **114** and/or the object receiving container **125** and hence the object arranged therein. This is discussed in more detail further below.

To determine a temperature of the object, a temperature of the holding device **114**, a temperature of the object receiving container **125** and/or a temperature of the object stage **122**, a temperature measuring unit **128** may be arranged in the sample chamber **120**. By way of example, the temperature measuring unit **128** may be embodied as an infrared measuring apparatus or as a semiconductor temperature sensor. However, the system described herein is not restricted to the use of such temperature measuring units. Rather, any temperature measuring unit which is suitable for the system described herein may be used as temperature measuring unit.

The control unit **123** of the SEM **100** may comprise the processor or may be embodied as a processor. A computer program product that controls the SEM **100** in such a way that the method according to embodiments of the system described herein is carried out may be loaded onto the processor. This is discussed in more detail further below.

FIG. **2** shows a particle beam apparatus in the form of a combination apparatus **200**. The combination apparatus **200** may have two particle beam columns. Firstly, the combination apparatus **200** may be provided with the SEM **100**, as already illustrated in FIG. **1**, but without the sample chamber **120**. Rather, the SEM **100** may be arranged at a sample chamber **201**. The sample chamber **201** may be under vacuum. For the purposes of producing the vacuum, a pump (not illustrated) may be arranged at the sample chamber **201**. In the embodiment illustrated in FIG. **2**, the sample chamber **201** may be operated in a first pressure range or in a second pressure range. The first pressure range may comprise only pressures of less than or equal to 10^{-3} hPa, and the second pressure range may comprise only pressures of greater than 10^{-3} hPa. To ensure said pressure ranges, the sample chamber **201** may be vacuum-sealed.

Arranged in the sample chamber **201** may be a chamber detector **119** which is embodied, for example, in the form of an Everhart-Thornley detector or an ion detector and which may have a detection surface that is coated with metal and blocks light. Further, the third detector **121** may be arranged in the sample chamber **201**.

The SEM **100** may serve to generate a first particle beam, specifically the primary electron beam already described further above, and has the optical axis, already specified above, which is provided with the reference sign **709** in FIG. **2** and which also may be referred to as first beam axis below. Secondly, the combination apparatus **200** may be provided with an ion beam apparatus **300**, which likewise may be arranged at the sample chamber **201**. The ion beam apparatus **300** likewise has an optical axis, which is provided with the reference sign **710** in FIG. **2** and which also may be referred to as second beam axis below.

The SEM **100** may be arranged vertically in relation to the sample chamber **201**. By contrast, the ion beam apparatus **300** may be arranged in a manner inclined by an angle of approximately 0° to 90° in relation to the SEM **100**. An arrangement of approximately 50° is illustrated by way of example in FIG. **2**. The ion beam apparatus **300** may comprise a second beam generator in the form of an ion beam generator **301**. Ions, which form a second particle beam in the form of an ion beam, may be generated by the ion beam generator **301**. The ions may be accelerated by means of an extraction electrode **302**, which may be at a predeterminable potential. The second particle beam then may pass through an ion optical unit of the ion beam apparatus **300**, wherein the ion optical unit may comprise a condenser lens **303** and a second objective lens **304**. The second objective lens **304** ultimately may generate an ion probe, which may be focused onto an object which may be arranged at an object receiving container **125**. The object receiving container **125** may be arranged at a holding device **114**. The holding device **114** may be arranged in turn at an object stage **122**.

In a further embodiment of the combination apparatus **200**, the holding device **114** may be embodied as an object receiving device, for example in the form of a manipulator and/or a gripper for holding the object receiving container **125**. Then, the holding device **114** may have a movable embodiment, for example as explained above and further below in respect of the object stage **122**.

An adjustable or selectable aperture unit **306**, a first electrode arrangement **307** and a second electrode arrangement **308** may be arranged above the second objective lens **304** (i.e., in the direction of the ion beam generator **301**), wherein the first electrode arrangement **307** and the second electrode arrangement **308** may be embodied as scanning electrodes. The second particle beam may be scanned over the surface of the object by means of the first electrode arrangement **307** and the second electrode arrangement **308**, with the first electrode arrangement **307** acting in a first direction and the second electrode arrangement **308** acting in a second direction, which may be counter to the first direction. Thus, scanning may be carried out in an x-direction, for example. The scanning in a y-direction perpendicular thereto may be brought about by further electrodes (not illustrated), which may be rotated by 90°, at the first electrode arrangement **307** and at the second electrode arrangement **308**.

As explained above, the holding device **114** may be arranged at the object stage **122**. In the embodiment shown in FIG. **2**, too, the object stage **122** may be embodied to be movable in three directions arranged perpendicular to one another, specifically in an x-direction (first stage axis), in a y-direction (second stage axis) and in a z-direction (third stage axis). Moreover, the object stage **122** may be rotated about two rotation axes which may be arranged perpendicular to one another (stage rotation axes).

The distances illustrated in FIG. **2** between the individual units of the combination apparatus **200** are illustrated in exaggerated fashion in order to better illustrate the individual units of the combination apparatus **200**.

Arranged at the sample chamber **201** may be a radiation detector **500**, which may be used to detect interaction radiation, for example x-ray radiation and/or cathodoluminescence light. The radiation detector **500** may be connected to a control unit **123**, which may have a monitor **124**. The control unit **123** may process detection signals that may be generated by the first detector **116**, the second detector **117** (not illustrated in FIG. **2**), the chamber detector **119**, the third detector **121** and/or the radiation detector **500** and displays said detection signals in the form of images on the monitor **124**.

The control unit **123** may comprise a database **126**, in which the control unit **123** may store data and/or from which data may be loaded onto a processor of the control unit **123**.

Arranged at the holding device **114** may be a cooling and/or heating device **127**, which may be used for cooling and/or heating the holding device **114**, the object receiving container **125** and/or the object. This is discussed in more detail further below.

To determine a temperature of the object, a temperature of the holding device **114**, a temperature of the object receiving container **125** and/or a temperature of the object stage **122**, a temperature measuring unit **128** may be arranged in the sample chamber **201**. By way of example, the temperature measuring unit **128** may be embodied as an infrared measuring apparatus or as a semiconductor temperature sensor. However, the system described herein is not restricted to the use of such temperature measuring units. Rather, any temperature measuring unit which is suitable for the system described herein may be used as temperature measuring unit.

The control unit **123** of the combination apparatus **200** may comprise the processor or may be embodied as a processor. A computer program product that controls the combination apparatus **200** in such a way that the method according to embodiments of the system described herein is carried out may be loaded onto the processor. This is discussed in more detail further below.

FIG. **3** is a schematic illustration of a further embodiment of a particle beam apparatus according to embodiments of the system described herein. This embodiment of the particle beam apparatus may be provided with the reference sign **400** and may comprise a mirror corrector for correcting e.g.

chromatic and/or spherical aberrations. The particle beam apparatus **400** may comprise a particle beam column **401**, which may be embodied as an electron beam column and which substantially corresponds to an electron beam column of a corrected SEM. However, the particle beam apparatus **400** is not restricted to an SEM with a mirror corrector. Rather, the particle beam apparatus may comprise any type of corrector units.

The particle beam column **401** may comprise a particle beam generator in the form of an electron source **402** (cathode), an extraction electrode **403**, and an anode **404**. By way of example, the electron source **402** is embodied as a thermal field emitter. Electrons emerging from the electron source **402** may be accelerated to the anode **404** on account of a potential difference between the electron source **402** and the anode **404**. Accordingly, a particle beam in the form of an electron beam may be formed along a first optical axis OA**1**.

The particle beam may be guided along a beam path, which corresponds to the first optical axis OA**1**, after the particle beam has emerged from the electron source **402**. A first electrostatic lens **405**, a second electrostatic lens **406**, and a third electrostatic lens **407** may be used to guide the particle beam.

Furthermore, the particle beam may be set along the beam path using a beam guiding device. The beam guiding device of this embodiment may comprise a source setting unit with two magnetic deflection units **408** arranged along the first optical axis OA**1**. Moreover, the particle beam apparatus **400** may comprise electrostatic beam deflection units. A first electrostatic beam deflection unit **409**, which also may be embodied as a quadrupole in a further embodiment, may be arranged between the second electrostatic lens **406** and the third electrostatic lens **407**. The first electrostatic beam deflection unit **409** likewise may be arranged downstream of the magnetic deflection units **408**. A first multi-pole unit **409**A in the form of a first magnetic deflection unit may be arranged at one side of the first electrostatic beam deflection unit **409**. Moreover, a second multi-pole unit **409**B in the form of a second magnetic deflection unit may be arranged at the other side of the first electrostatic beam deflection unit **409**. The first electrostatic beam deflection unit **409**, the first multi-pole unit **409**A, and the second multi-pole unit **409**B may be set for the purposes of setting the particle beam in respect of the axis of the third electrostatic lens **407** and the entrance window of a beam deflection device **410**. The first electrostatic beam deflection unit **409**, the first multi-pole unit **409**A and the second multi-pole unit **409**B may interact like a Wien filter. A further magnetic deflection element **432** may be arranged at the entrance to the beam deflection device **410**.

The beam deflection device **410** may be used as a particle beam deflector, which deflects the particle beam in a specific manner. The beam deflection device **410** may comprise a plurality of magnetic sectors, specifically a first magnetic sector **411**A, a second magnetic sector **411**B, a third magnetic sector **411**C, a fourth magnetic sector **411**D, a fifth magnetic sector **411**E, a sixth magnetic sector **411**F, and a seventh magnetic sector **411**G. The particle beam enters the beam deflection device **410** along the first optical axis OA**1** and said particle beam may be deflected by the beam deflection device **410** in the direction of a second optical axis OA**2**. The beam deflection may be performed by means of the first magnetic sector **411**A, by means of the second magnetic sector **411**B and by means of the third magnetic sector **411**C through an angle of 30° to 120°. The second optical axis OA**2** may be oriented at the same angle with respect to the first optical axis OA**1**. The beam deflection device **410** also may deflect the particle beam which may be guided along the second optical axis OA**2**, to be precise in the direction of a third optical axis OA**3**. The beam deflection may be provided by the third magnetic sector **411**C, the fourth magnetic sector **411**D, and the fifth magnetic sector **411**E. In the embodiment in FIG. **3**, the deflection with respect to the second optical axis OA**2** and with respect to the third optical axis OA**3** may be provided by deflection of the particle beam at an angle of 90°. Hence, the third optical axis OA**3** extends coaxially with respect to the first optical axis OA**1**. However, reference is made to the fact that the particle beam apparatus **400** according to embodiments of the system described herein described here is not restricted to deflection angles of 90°. Rather, any suitable deflection angle may be selected by the beam deflection device **410**, for example 70° or 110°, such that the first optical axis OA**1** does not extend coaxially with respect to the third optical axis OA**3**. In respect of further details of the beam deflection device **410**, reference is made to WO 2002/067286 A2.

After the particle beam has been deflected by the first magnetic sector **411**A, the second magnetic sector **411**B, and the third magnetic sector **411**C, the particle beam may be guided along the second optical axis OA**2**. The particle beam may be guided to an electrostatic mirror **414** and may travel on its path to the electrostatic mirror **414** along a fourth electrostatic lens **415**, a third multi-pole unit **416**A in the form of a magnetic deflection unit, a second electrostatic beam deflection unit **416**, a third electrostatic beam deflection unit **417**, and a fourth multi-pole unit **416**B in the form of a magnetic deflection unit. The electrostatic mirror **414** may comprise a first mirror electrode **413**A, a second mirror electrode **413**B, and a third mirror electrode **413**C. Electrons of the particle beam which are reflected back at the electrostatic mirror **414** once again may travel along the second optical axis OA**2** and re-enter the beam deflection device **410**. Then, they may be deflected to the third optical axis OA**3** by the third magnetic sector **411**C, the fourth magnetic sector **411**D, and the fifth magnetic sector **411**E.

The electrons of the particle beam may emerge from the beam deflection device **410** and said electrons may be guided along the third optical axis OA**3** to an object receiving container **425**, at which an object to be examined may be arranged. The object receiving container **425** may be arranged at a holding device **114** in turn. On the path to the object, the particle beam may be guided to a fifth electrostatic lens **418**, a beam guiding tube **420**, a fifth multi-pole unit **418**A, a sixth multi-pole unit **418**B, and an objective lens **421**. The fifth electrostatic lens **418** may be an electrostatic immersion lens. By way of the fifth electrostatic lens **418**, the particle beam may be decelerated or accelerated to an electric potential of the beam guiding tube **420**.

By means of the objective lens **421**, the particle beam may be focused into a focal plane in which the object is arranged. The holding device **114** may be arranged at a movable object stage **424**. The movable object stage **424** may be arranged in a sample chamber **426** of the particle beam apparatus **400**. The object stage **424** may be embodied to be movable in three directions arranged perpendicular to one another, specifically in an x-direction (first stage axis), in a y-direction (second stage axis), and in a z-direction (third stage axis). Moreover, the object stage **424** may be rotated about two rotation axes which may be arranged perpendicular to one another (stage rotation axes).

In a further embodiment of the particle beam apparatus **400**, the holding device **114** may be embodied as an object receiving device, for example in the form of a manipulator

and/or a gripper for holding the object receiving container **425**. Then, the holding device **114** may have a movable embodiment, for example as explained above and further below in respect of the object stage **424**.

The sample chamber **426** may be under vacuum. For the purposes of producing the vacuum, a pump (not illustrated) may be arranged at the sample chamber **426**. In the embodiment illustrated in FIG. **3**, the sample chamber **426** may be operated in a first pressure range or in a second pressure range. The first pressure range may comprise only pressures of less than or equal to 10^{-3} hPa, and the second pressure range may comprise only pressures of greater than 10^{-3} hPa. To ensure said pressure ranges, the sample chamber **426** may be vacuum-sealed.

The objective lens **421** may be embodied as a combination of a magnetic lens **422** and a sixth electrostatic lens **423**. The end of the beam guiding tube **420** further may be an electrode of an electrostatic lens. After emerging from the beam guiding tube **420**, particles of the particle beam apparatus **400** may be decelerated to a potential of the object. The objective lens **421** may not be restricted to a combination of the magnetic lens **422** and the sixth electrostatic lens **423**. Rather, the objective lens **421** may assume any suitable form. By way of example, the objective lens **421** also may be embodied as a purely magnetic lens or as a purely electrostatic lens.

The particle beam which is focused onto the object may interact with the object. Interaction particles may be generated. In particular, secondary electrons may be emitted from the object or backscattered electrons may be backscattered at the object. The secondary electrons or the backscattered electrons may be accelerated again and guided into the beam guiding tube **420** along the third optical axis OA**3**. In particular, the trajectories of the secondary electrons and the backscattered electrons extend on the route of the beam path of the particle beam in the opposite direction to the particle beam.

The particle beam apparatus **400** may comprise a first analysis detector **419**, which may be arranged between the beam deflection device **410** and the objective lens **421** along the beam path. Secondary electrons traveling in directions oriented at a large angle with respect to the third optical axis OA**3** may be detected by the first analysis detector **419**. Backscattered electrons and secondary electrons which have a small axial distance with respect to the third optical axis OA**3** at the location of the first analysis detector **419**—i.e., backscattered electrons and secondary electrons which have a small distance from the third optical axis OA**3** at the location of the first analysis detector **419**—may enter the beam deflection device **410** and be deflected to a second analysis detector **428** by the fifth magnetic sector **411**E, the sixth magnetic sector **411**F and the seventh magnetic sector **411**G along a detection beam path **427**. By way of example, the deflection angle is 90° or 110°.

The first analysis detector **419** may generate detection signals which may be largely generated by emitted secondary electrons. The detection signals which are generated by the first analysis detector **419** may be guided to a control unit **123** and may be used to obtain information about the properties of the interaction region of the focused particle beam with the object. In particular, the focused particle beam may be scanned over the object using a scanning device **429**. By means of the detection signals generated by the first analysis detector **419**, an image of the scanned region of the object then may be generated and displayed on a display unit. The display unit is, for example, a monitor **124** that may be arranged at the control unit **123**.

The second analysis detector **428** also may be connected to the control unit **123**. Detection signals of the second analysis detector **428** may be passed to the control unit **123** and used to generate an image of the scanned region of the object and to display it on a display unit. The display unit is, for example, the monitor **124** that may be arranged at the control unit **123**.

Arranged at the sample chamber **426** may be a radiation detector **500**, which may be used to detect interaction radiation, for example x-ray radiation and/or cathodoluminescence light. The radiation detector **500** may be connected to the control unit **123**, which may have the monitor **124**. The control unit **123** may process detection signals of the radiation detector **500** and displays them in the form of images on the monitor **124**.

The control unit **123** may comprise a database **126**, in which the control unit **123** may store data and/or from which data may be loaded onto a processor of the control unit **123**.

Arranged at the holding device **114** may be a cooling and/or heating device **127**, which may be used for cooling and/or heating the holding device **114**, the object receiving container **425** and/or the object. This is discussed in more detail further below.

To determine a temperature of the object, a temperature of the holding device **114**, a temperature of the object receiving container **125** and/or a temperature of the object stage **424**, a temperature measuring unit **128** may be arranged in the sample chamber **426**. By way of example, the temperature measuring unit **128** may be embodied as an infrared measuring apparatus or as a semiconductor temperature sensor. However, the system described herein is not restricted to the use of such temperature measuring units. Rather, any temperature measuring unit which is suitable for the system described herein may be used as temperature measuring unit.

The control unit **123** of the particle beam apparatus **400** may comprise the processor or may be embodied as a processor. A computer program product that controls the particle beam apparatus **400** in such a way that the method according to embodiments of the system described herein is carried out may be loaded onto the processor. This is discussed in more detail further below.

FIG. **4** shows a schematic illustration of a light microscope **800**. The light microscope **800** may comprise a light source **801** for generating light and an optical unit **802** in the form of an objective for guiding the light to an object, which may be arranged on an object receiving container **125**. Further, the light microscope **800** may be provided with a holding device **114** for holding the object receiving container **125**. Moreover, the light microscope **800** may be embodied with a movably embodied object stage **122**, arranged at which may be the holding device **114** and hence also the object receiving container **125**.

The object stage **122** of the light microscope **800** may be embodied to be movable, for example, along a first translation axis (in particular an x-axis), along a second translation axis (in particular a y-axis), and along a third translation axis (in particular a z-axis). By way of example, the first translation axis, the second translation axis, and the third translation axis may be oriented perpendicular to one another. Further, the object stage **122** may be for example embodied to be rotatable about a first axis of rotation and about a second axis of rotation, which may be aligned perpendicular to the first axis of rotation. In one embodiment of the light microscope **800**, a respective motor may be provided for each of the aforementioned axes, said motor facilitating the movement along the corresponding axis.

In a further embodiment of the light microscope **800**, the holding device **114** may be embodied as an object receiving device, for example in the form of a manipulator and/or a gripper for holding the object receiving container **125**. Then, the holding device **114** may have a movable embodiment, for example as explained above and further below in respect of the object stage **122**.

The light microscope **800** may comprise a control unit **123**, which may be provided with a monitor **124** on which images of the object recorded with the light microscope **800** may be displayable.

The control unit **123** may comprise a database **126**, in which the control unit **123** may store data and/or from which data may be loaded onto a processor of the control unit **123**.

Arranged at the holding device **114** may be a cooling and/or heating device **127**, which may be used for cooling and/or heating the holding device **114**, the object receiving container **125** and/or the object. This is discussed in more detail further below.

To determine a temperature of the object, a temperature of the holding device **114** and/or a temperature of the object stage **122**, the light microscope **800** may comprise a temperature measuring unit **128**. By way of example, the temperature measuring unit **128** may be embodied as an infrared measuring apparatus or as a semiconductor temperature sensor. However, the system described herein is not restricted to the use of such temperature measuring units. Rather, any temperature measuring unit which is suitable for the system described herein may be used as temperature measuring unit.

The control unit **123** of the light microscope **800** may comprise the processor or may be embodied as a processor. A computer program product that controls the light microscope **800** in such a way that the method according to embodiments of the system described herein is carried out may be loaded onto the processor. This is discussed in more detail further below.

FIG. **4**A shows a schematic illustration of an apparatus **800**A for processing an object. The apparatus **800**A for processing an object may comprise a processing device **801**A for processing the object. By way of example, the processing device **801**A may be embodied as a mechanical cutting device and/or as a laser cutting device and/or as a device for electron beam-induced deposition of layers on the object, for example using a gas, and/or as a device for ion beam-induced deposition of layers on the object, for example using a gas, and/or as a sputtering apparatus. The object may be arranged at an object receiving container **125**. Further, the apparatus **800**A for processing an object may be provided with a holding device **114** for holding the object receiving container **125**. Moreover, the apparatus **800**A for processing an object may be embodied with a movably embodied object stage **122**, arranged at which may be the holding device **114** and hence also the object receiving container **125**.

The object stage **122** of the apparatus **800**A for processing an object may be embodied to be movable, for example along a first translation axis (in particular an x-axis), along a second translation axis (in particular a y-axis) and along a third translation axis (in particular a z-axis). By way of example, the first translation axis, the second translation axis, and the third translation axis may be oriented perpendicular to one another. Further, the object stage **122** may be for example embodied to be rotatable about a first axis of rotation and about a second axis of rotation, which may be aligned perpendicular to the first axis of rotation. In one embodiment of the apparatus **800**A for processing an object, each of the aforementioned axes is respectively associated with a motor which facilitates the movement along the corresponding axis.

In a further embodiment of the apparatus **800**A for processing an object, the holding device **114** may be embodied as an object receiving device, for example in the form of a manipulator and/or a gripper for holding the object receiving container **125**. Then, the holding device **114** may have a movable embodiment, for example as explained above and further below in respect of the object stage **122**.

Arranged at the holding device **114** may be a cooling and/or heating device **127**, which may be used for cooling and/or heating the holding device **114**, the object receiving container **125** and/or the object. This is discussed in more detail further below.

To determine a temperature of the object, a temperature of the holding device **114** and/or a temperature of the object stage **122**, the apparatus **800**A for processing an object may comprise a temperature measuring unit **128**. By way of example, the temperature measuring unit **128** may be embodied as an infrared measuring apparatus or as a semiconductor temperature sensor. However, the system described herein is not restricted to the use of such temperature measuring units. Rather, any temperature measuring unit which is suitable for the system described herein may be used as temperature measuring unit.

A control unit **123** of the apparatus **800**A for processing an object may comprise a processor or may be embodied as a processor. Loaded onto the processor may be a computer program product which controls the apparatus **800**A for processing an object in such a way that the method according to embodiments of the system described herein may be carried out. This is discussed in more detail further below.

Now, in the following, the object stage **122**, **424** of the above-discussed particle beam apparatuses **100**, **200** and **400**, of the light microscope **800** and of the apparatus **800**A for processing an object is discussed in more detail. The object stage **122**, **424** may be embodied as a movable object stage, which is illustrated schematically in FIGS. **5** and **6**. Reference is made to the fact that the system described herein is not restricted to the object stage **122**, **424** described here. Rather, the system described herein may include any movable object stage that is suitable for the system described herein. In a further embodiment, the holding device **114** may be embodied as an object receiving device, for example in the form of a manipulator and/or a gripper for holding the object receiving container **125**. Then, the holding device **114** may have a movable embodiment, for example as explained above and further below in respect of the object stage **122**, **424**.

The holding device **114** may be arranged at the object stage **122**, **424**, either directly or using a transportation device, with the object receiving container **125**, **425** with the object being arranged, in turn, in the holding device **114**. The object stage **122**, **424** may have movement elements that ensure a movement of the object stage **122**, **424** in such a way that a region of interest on the object may be examined, for example, by means of a particle beam and/or a light beam. The movement elements are illustrated schematically in FIGS. **5** and **6** and are explained below.

The object stage **122**, **424** may have a first movement element **600**, which may be arranged, for example, at a housing **601** of the sample chamber **120**, **201** or **426**, in which the object stage **122**, **424** may be arranged in turn. The first movement element **600** may enable a movement of the object stage **122**, **424** along the z-axis (third stage axis). Further, a second movement element **602** may be provided.

The second movement element **602** may enable a rotation of the object stage **122**, **424** about a first stage rotation axis **603**, which also may be referred to as a tilt axis. This second movement element **602** may serve to tilt an object arranged at the object receiving container **125**, **425** about the first stage rotation axis **603**, wherein the object receiving container **125**, **425** may be arranged at the holding device **114**.

Arranged at the second movement element **602**, in turn, may be a third movement element **604** that may be embodied as a guide for a slide and that may ensure that the object stage **122**, **424** may be movable in the x-direction (first stage axis). The aforementioned slide may be a further movement element in turn, namely a fourth movement element **605**. The fourth movement element **605** may be embodied in such a way that the object stage **122**, **424** is movable in the y-direction (second stage axis). To this end, the fourth movement element **605** may have a guide in which a further slide is guided, a holding device **114** with the object receiving container **125**, **425** in turn being arranged at the latter.

The holding device **114** may be embodied, in turn, with a fifth movement element **606** that facilitates a rotation of the holding device **114** and hence also the object receiving container **125**, **425** about a second stage rotation axis **607**. The second stage rotation axis **607** may be oriented perpendicular to the first stage rotation axis **603**.

On account of the above-described arrangement, the object stage **122**, **424** of the embodiment discussed here may have the following kinematic chain: first movement element **600** (movement along the z-axis)—second movement element **602** (rotation about the first stage rotation axis **603**)—third movement element **604** (movement along the x-axis)—fourth movement element **605** (movement along the y-axis)—fifth movement element **606** (rotation about the second stage rotation axis **607**).

In a further embodiment (not illustrated), further movement elements may be arranged at the object stage **122**, **424** such that movements along further translational axes and/or about further rotation axes may be made possible.

It should be clear from FIG. **6** that each of the aforementioned movement elements may be connected to a drive unit in the form of a motor M**1** to M**5**. Thus, the first movement element **600** may be connected to a first drive unit M**1** and may be driven on account of a driving force that may be provided by the first drive unit M**1**. The second movement element **602** may be connected to a second drive unit M**2**, which drives the second movement element **602**. The third movement element **604** may be connected, in turn, to a third drive unit M**3**. The third drive unit M**3** provides a driving force for driving the third movement element **604**. The fourth movement element **605** may be connected to a fourth drive unit M**4**, wherein the fourth drive unit M**4** drives the fourth movement element **605**. Furthermore, the fifth movement element **606** may be connected to a fifth drive unit M**5**. The fifth drive unit M**5** provides a driving force that drives the fifth movement element **606**.

The aforementioned drive units M**1** to M**5** may be embodied as stepper motors, for example, and may be controlled by a control unit **608** and may be each supplied with a supply current by the control unit **608** (cf. FIG. **6**). It is explicitly pointed out that the system described herein is not restricted to the movement by means of stepper motors. Rather, any drive units may be used as drive units, for example brushless motors. By supplying the supply current to the drive units M**1** to M**5**, the drive units M**1** to M**5** may be controlled in such a way that the object stage **122**, **424** may be moved to a desired position, for example in the sample chamber **120**, **201**, **426**. The object stage **122**, **424** may be held in this desired position by means of the drive units M**1** to M**5**. Expressed differently, the object stage **122**, **424** should no longer move away from this desired position. This may be desirable, in particular for a good resolution and/or accurate imaging of an object arranged on the object stage **122**, **424**. When the drive units M**1** to M**5** are stopped, the amplitude of the supply current may be lowered to a specifiable holding amplitude for each of the drive units M**1** to M**5**. The supply current with this holding amplitude also may be referred to as a holding current. When the supply current is at the holding current for each of the drive units M**1** to M**5**, the object stage **122**, **424** may remain at the desired position.

FIG. **7** shows an embodiment of the object receiving container **125**. The object receiving container **125** may comprise a first container unit **129** and a second container unit **130**. A first cavity **131** and a second cavity **132** may be arranged at the first container unit **129**. The first cavity **131** may be embodied to receive a first object. Further, the second cavity **132** may be embodied to receive a second object.

Moreover, the object receiving container **125** may comprise a hinge device **134**, which may be arranged both at the first container unit **129** and at the second container unit **130**. The second container unit **130** may have a movable embodiment relative to the first container unit **129** on account of the hinge device **134**. The second container unit **130** may be able to be brought into a first position and/or into a second position relative to the first container unit **129**.

The first cavity **131** may comprise a first cavity opening **136** and a second cavity opening **138** (cf. FIGS. **7** and **9**). The first cavity opening **136** and the second cavity opening **138** of the first cavity **131** delimit the first cavity **131**. Further, the first cavity opening **136** and the second cavity opening **138** of the first cavity **131** may be arranged opposite one another. Moreover, the second cavity **132** may comprise a first cavity opening **137** and a second cavity opening **139** (cf. FIGS. **7** and **9**). The first cavity opening **137** and the second cavity opening **139** of the second cavity **132** delimit the second cavity **132**. Further, the first cavity opening **137** and the second cavity opening **139** of the second cavity **132** may be arranged opposite one another.

FIG. **8** shows the second position of the second container unit **130** relative to the first container unit **129**. In the second position of the second container unit **130** relative to the first container unit **129**, the first cavity opening **136** of the first cavity **131** and the first cavity opening **137** of the second cavity **132** may be arranged at the second container unit **130**. Consequently, the second container unit **130** may cover the first cavity opening **136** of the first cavity **131** and the first cavity opening **137** of the second cavity **132** in the second position of the second container unit **130** relative to the first container unit **129**. Then, the first object arranged in the first cavity **131** may not be accessible through the first cavity opening **136** of the first cavity **131**. Further, the second object arranged in the second cavity **132** then may not be accessible through the first cavity opening **137** of the second cavity **132**. FIG. **7** shows the first position of the second container unit **130** relative to the first container unit **129**. In the first position of the second container unit **130** relative to the first container unit **129**, the first cavity opening **136** of the first cavity **131** and the first cavity opening **137** of the second cavity **132** may be freely accessible at the first container unit **129**. Then, the first object arranged in the first cavity **131** may be accessible through the first cavity opening **136** of the first cavity **131**. Further, the second object arranged in the second cavity **132** then may be accessible through the first cavity opening **137** of the second cavity **132**.

In one embodiment of the object receiving container **125**, a covering device **140** for covering the second cavity opening **138** of the first cavity **131** and the second cavity opening **139** of the second cavity **132** is arranged at the second cavity opening **138** of the first cavity **131** and at the second cavity opening **139** of the second cavity **132** (cf. FIGS. **7** and **9**). The covering device **140** may be embodied as a slider device and arranged in a receptacle at the first container unit **129** in such a way that the covering device **140** is displaceable relative to the second cavity opening **138** of the first cavity **131** and to the second cavity opening **139** of the second cavity **132**. In this way, the covering device **140** may be able to be brought into a covering position (cf. FIG. **7**) and an exposing position (cf. FIG. **9**). In the covering position, the covering device **140** may cover the second cavity opening **138** of the first cavity **131** and the second cavity opening **139** of the second cavity **132**. Expressed differently, the covering device **140** seals the first cavity **131** and the second cavity **132** in the region of the second cavity opening **138** of the first cavity **131** and in the region of the second cavity opening **139** of the second cavity **132** in the covering position. In the exposing position, the covering device **140** does not seal the first cavity **131** and the second cavity **132** in the region of the second cavity opening **138** of the first cavity **131** and in the region of the second cavity opening **139** of the second cavity **132**. Then, the first object arranged in the first cavity **131** may be accessible through the second cavity opening **138** of the first cavity **131**. Further, the second object arranged in the second cavity **132** then may be accessible through the second cavity opening **139** of the second cavity **132**. The aforementioned embodiments may be advantageous if examinations of the first object and/or the second object are performed, within the scope of which a particle beam may be transmitted through the first object and/or the second object. The transmitted particles of the particle beam then may be detected. Interaction particles which arise on account of an interaction of the particle beam with the first object may emerge at a side of the first object which may be arranged at the second cavity opening **138** of the first cavity **131**. Furthermore, interaction particles which arise on account of an interaction of the particle beam with the second object may emerge at a side of the second object which may be arranged at the second cavity opening **139** of the second cavity **132**. The interaction particles and/or the transmitted particles of the particle beam then may be detected using a detector, for example the third detector **121**.

Consequently, in the above-described embodiment, firstly, the first cavity opening **136** of the first cavity **131** and the first cavity opening **137** of the second cavity **132** and, secondly, the second cavity opening **138** of the first cavity **131** and the second cavity opening **139** of the second cavity **132** may be covered by different units. The first cavity openings **136**, **137** may be covered by the second container unit **130**. By contrast, the second cavity openings **138**, **139** may be covered by the covering device **140**.

As illustrated in FIGS. **7** to **9**, the object receiving container **125** may comprise a fastening device **133**, which may be arranged at the first container unit **129**. In addition or as an alternative thereto, the fastening device **133** may be arranged at the second container unit **130**. The fastening device **133** may serve to arrange the object receiving container **125** at the holding device **114**, as yet to be explained in more detail below.

In the embodiment of the object receiving container **125** illustrated in FIGS. **7** to **9**, the fastening device **133** may be embodied as a spring device. The fastening device **133** may have a first spring end **141** and a second spring end **142**. The first spring end **141** and the second spring end **142** may be arranged at a distance from one another. Further, the first spring end **141** may be embodied so as to be movable relative to the second spring end **142**. Expressed differently, the first spring end **141** and/or the second spring end **142** may have a movable embodiment. The first spring end **141** may have a first engagement opening **143** for the engagement of an actuation tool. Moreover, the second spring end **142** may have a second engagement opening **144** for the engagement of the actuation tool. This may ensure a simple operation of the fastening device **133** in the form of the spring device, and so the object receiving container **125** may be able to be easily mounted on the holding device **114** and may be easily detachable from the holding device **114** again, as will be explained in more detail below.

In a further embodiment of the object receiving container **125**, the fastening device **133** may comprise at least one snap ring and/or may be embodied as a snap ring. In an even further embodiment of the object receiving container **125**, the fastening device **133** may comprise a clamping device or may be embodied as a clamping device. In particular, the fastening device **133** may have a first clamping part and a second clamping part. In addition or as an alternative thereto, the fastening device **133** may comprise a screw and/or an eccentric disk, wherein the screw and/or the eccentric disk may be used to clamp the object receiving container **125** against the holding device **114**.

In the embodiment of the object receiving container **125** illustrated in FIGS. **7** to **9**, the first container unit **129** may have a first surface **145**, wherein the first surface **145** may be arranged in a first plane. Further, the second container unit **130** may have a second surface **146**, wherein the second surface **146** may be arranged in a second plane. As illustrated in FIG. **8**, the first surface **145** of the first container unit **129** rests against the second surface **146** of the second container unit **130** in the second position of the second container unit **130** relative to the first container unit **129**, and so the first cavity **131** arranged at the first container unit **129** and the second cavity **132** may be covered by the second surface **146** of the second container unit **130**. FIG. **7** shows the first position of the second container unit **130** relative to the first container unit **129**. In the first position, the first surface **145** of the first container unit **129** may be arranged with respect to the second surface **146** of the second container unit **130** in such a way that the first plane is aligned with respect to the second plane as follows: (i) the first plane is aligned parallel to the second plane or (ii) the first plane is identical to the second plane or (iii) the first plane is aligned at an angle of more than 5° with respect to the second plane.

FIG. **10** shows a further perspective view of the object receiving container **125** having the features already discussed further above. Further, FIG. **10** shows a clamping unit **135**, which is likewise illustrated in FIGS. **7** and **9**. The function of the clamping unit **135** will be discussed in more detail below.

FIG. **11** shows a further embodiment of the object receiving container **125**. This embodiment of the object receiving container **125** also may comprise a first container unit **129** and a second container unit **130**. A first cavity **131** may be arranged at the first container unit **129**. The first cavity **131** may be embodied to receive a first object. The first cavity **131** may have a first cavity opening **136**. The first cavity opening **136** delimits the first cavity **131**.

In the embodiment of the object receiving container **125** illustrated in FIG. **11**, the second container unit **130** may be embodied as a displacing device such that the second

container unit **130** is displaceable into a first position and/or into a second position relative to the first container unit **129**. Expressed differently, the first container unit **129** and/or the second container unit **130** may be displaceable such that the second container unit **130** may be arranged in the first position and/or in the second position relative to the first container unit **129**. The second container unit **130** may cover the first cavity **131** arranged at the first container unit **129** when the second container unit **130** is in the second position relative to the first container unit **129**. If a plurality of cavities are arranged at the first container unit **129**, the second container unit **130** may cover the plurality of cavities in the second position of the second container unit **130** relative to the first container unit **129**. FIG. **11** shows the first position of the second container unit **130** relative to the first container unit **129**. The first cavity **131** and hence the first object arranged in the first cavity **131** may be accessible in the first position of the second container unit **130** relative to the first container unit **129**. Therefore, the first object may be examined, analyzed and/or processed. If a plurality of cavities are arranged at the first container unit **129**, then the plurality of cavities and hence the objects arranged in the plurality of cavities may be accessible in the first position of the second container unit **130** relative to the first container unit **129**.

The embodiment of the object receiving container **125** illustrated in FIG. **11** may comprise a fastening device **133**, which may be arranged at the first container unit **129**. The fastening device **133** may be embodied as a spring device. The fastening device **133** of this embodiment, too, may have a first spring end **141** and a second spring end **142**. The first spring end **141** and the second spring end **142** may be arranged at a distance from one another. Further, the first spring end **141** may be embodied so as to be movable relative to the second spring end **142**. Expressed differently, the first spring end **141** and/or the second spring end **142** may have a movable embodiment. Due to the fastening device **133** in the form of the spring device it may be ensured that the object receiving container **125** is able to be easily mounted on the holding device **114** and is easily detachable from the holding device **114** again, as will be explained in more detail below.

FIG. **12** shows an embodiment of a mounting device **147**, by means of which, for example, the first object may be arranged in the first cavity **131** and the second object may be arranged in the second cavity **132** of the object receiving container **125** as per FIGS. **7** to **10**. The mounting device **147** may have an interior **148**, which may be surrounded by an insulated wall **149**. A holder **150** for the object receiving container **125** may be arranged in the interior **148**. The holder **150** may comprise a first holder part **151** and a second holder part **152**, which may be interconnected by way of a hinge **153**. The first holder part **151** may be positioned relative to the second holder part **152** in order to ensure that it is easy to mount the first object in the first cavity **131** and the second object in the second cavity **132** of the object receiving container **125**.

The object receiving container **125** may be arranged in a receptacle **154** of the holder **150** in order to mount the first object in the first cavity **131** and the second object in the second cavity **132** of the object receiving container **125**. The object receiving container **125** may be fastened in the receptacle **154** by means of the fastening device **133**. To this end, an actuation tool engages in the first engagement opening **143** of the first spring end **141** and in the second engagement opening **144** of the second spring end **142**. Thereupon, the first spring end **141** and the second spring end **142** may be moved toward one another. Subsequently, the object receiving container **125** may be inserted in the receptacle **154**. By removing the actuation tool from the first engagement opening **143** of the first spring end **141** and from the second engagement opening **144** of the second spring end **142**, the first spring end **141** and the second spring end **142** move apart, and so an outer surface of the fastening device **133** rests against an inner surface of the receptacle **154**. In this way, the object receiving container **125** may be held in clamping fashion in the receptacle **154**.

By filling the interior **148** of the mounting device **147**, for example with liquid nitrogen or liquid helium, the object receiving container **125** may be cooled to cryo-temperatures, and so the first object may be mounted in the first cavity **131** and the second object may be mounted in the second cavity **132** of the object receiving container **125** under cryo-temperatures. To this end, the clamping unit **135**, which may be embodied as a spring, may be raised by a rod-shaped unit **155** (cf. FIGS. **13** and **14**), and so the first object is insertable into the first cavity **131** and the second object is insertable into the second cavity **132** of the object receiving container **125**. Subsequently, the clamping unit **135** may be lowered by the rod-shaped unit **155**, and so the first object is held in securely clamping fashion in the first cavity **131** and the second object is held in securely clamping fashion in the second cavity **132** of the object receiving container **125**. By way of example, the rod-shaped unit **155** may be raised and lowered using a sliding-block guide **156**. By moving an actuation unit **157**, the rod-shaped unit **155** is, firstly, moved along the sliding-block guide **156** and, secondly, raised or lowered.

In a further embodiment, the first object may be initially arranged at a first holder and/or the second object may be arranged at a second holder. Subsequently, the first holder may be inserted together with the first object into the first cavity **131**. Further, the second holder may be inserted together with the second object into the second cavity **132**. Subsequently, the clamping unit **135** may be lowered by the rod-shaped unit **155**, and so the first holder together with the first object is held in securely clamping fashion in the first cavity **131** and the second holder together with the second object is held in securely clamping fashion in the second cavity **132** of the object receiving container **125**. This embodiment is illustrated in FIG. **15**. FIG. **15** shows a further perspective illustration of the object receiving container **125**, wherein a first holder **160** is arranged in the first cavity **131**, with, in turn, a first object **158** being arranged at the first holder **160**. A second holder **161** may be arranged in the second cavity **132**, with, in turn, a second object **159** being arranged at the second holder **161**. By way of example, the first holder **160** and/or the second holder **161** may be configured as commercially available TEM sample holders in the form of so-called grids or U-shaped embodied holders.

FIG. **16** shows an embodiment of the holding device **114**. By way of example, the holding device **114** may be an adapter device, which may be arranged at the object stage **122**, **424** of the SEM **100**, of the combination apparatus **200**, of the particle beam apparatus **400** and/or of the light microscope **800**. In addition or as an alternative thereto, the holding device **114** may be arranged at a receiving device of the apparatus **800**A for processing an object, for example of a microtome, a laser cutting appliance and/or a polishing appliance.

In order to arrange the object receiving container **125** at the holding device **114**, the object receiving container **125** may be arranged in a receptacle **162** of the holding device

114. To this end, the actuation tool engages in the first engagement opening **143** of the first spring end **141** and in the second engagement opening **144** of the second spring end **142**. Thereupon, the first spring end **141** and the second spring end **142** may be moved toward one another. Subsequently, the object receiving container **125** may be inserted into the receptacle **162** of the holding device **114**. By removing the actuation tool from the first engagement opening **143** of the first spring end **141** and from the second engagement opening **144** of the second spring end **142**, the first spring end **141** and the second spring end **142** move apart, and so an outer surface of the fastening device **133** rests against an inner surface of the receptacle **162** of the holding device **114**. In this way, the object receiving container **125** may be held in clamping fashion in the receptacle **162** of the holding device **114**.

In a further embodiment of the holding device **114**, the arrangement of the object receiving container **125** may be implemented by a differently configured fastening device **133**. By way of example, the fastening device **133** may comprise at least one snap ring and/or may be embodied as a snap ring. In an even further embodiment, the fastening device **133** may comprise a clamping device or may be embodied as a clamping device. In particular, the fastening device **133** may have a first clamping part and a second clamping part. In addition or as an alternative thereto, the fastening device **133** may comprise a screw and/or an eccentric disk, wherein the screw and/or the eccentric disk may be used to clamp the object receiving container **125** against the holding device **114**.

As already mentioned, the holding device **114** may have any suitable configuration which is necessary in order to be arranged, for example, at the object stage **122**, **424** of the SEM **100**, of the combination apparatus **200**, of the particle beam apparatus **400** and/or of the light microscope **800**. In addition or as an alternative thereto, the holding device **114** may be configured in such a way that the holding device **114** may be arranged at the apparatus **800**A for processing an object, for example at a microtome, at a laser cutting appliance and/or at a polishing appliance.

FIG. **17** shows a further embodiment of the holding device **114**. This embodiment of the holding device **114** may comprise a base plate **163**, the sides of which may be delimited by a first strip **164**, a second strip **165** and a third strip **166** in such a way that the first strip **164**, the second strip **165** and the third strip **166** delimit the receptacle **162** of the holding device **114**. The object receiving container **125** may be arranged in the receptacle **162**. In FIG. **17**, the second container unit **130** may be arranged in the second position relative to the first container unit **129**.

FIG. **18** shows the embodiment of the holding device **114** as per FIG. **16**, but from a different perspective. Therefore, reference is initially made to the explanations above. Further, in FIG. **18**, the second container unit **130** may be arranged in the second position relative to the first container unit **129**.

FIG. **19** shows an even further embodiment of the holding device **114**. This embodiment of the holding device **114** may have an oblique surface **167** in respect of a main body **168**. The oblique surface **167** may be delimited by a first strip **164**, a second strip **165** and a third strip **166** in such a way that the first strip **164**, the second strip **165** and the third strip **166** engage around the receptacle **162** of the holding device **114**. The object receiving container **125** may be arranged in the receptacle **162**. On account of the oblique surface **167**, it may be no longer mandatory to rotate the holding device **114**, and hence also the object receiving container **125**, about an axis of rotation, for example in the sample chamber **120** of the SEM **100**, in the sample chamber **201** of the combination apparatus **200**, in the sample chamber **426** of the particle beam apparatus **400** and/or in the light microscope **800**.

Embodiments of methods according to the system described herein are described in more detail below. Explicit reference is made to the fact that these embodiments should only be understood as illustrative and that the system described herein is not restricted to these embodiments.

FIG. **20** initially shows preparatory method steps of a method for examining, analyzing and/or processing an object. Initially, an object, for example the first object **158** or the second object **159**, may be arranged at a holder in a method step S**1**. By way of example, the holder may be a commercially available TEM object holder. Subsequently, in method step S**2**, the holder may be arranged together with the object **158**, **159**, for example in the first cavity **131** or in the second cavity **132** of the object receiving container **125**. This may be implemented with the mounting device **147**, in which the object receiving container **125** may be arranged. The arrangement of the holder together with the object **158**, **159**, for example in the first cavity **131** or in the second cavity **132** of the object receiving container **125**, was already described above. Therefore, reference is made to all the explanations provided above in respect of the arrangement of the holder together with the object **158**, **159** in the object receiving container **125**. In method step S**3**, at least one marking may be applied to the object receiving container **125**, said marking being used as a reference marking for orientation and navigation purposes during the subsequent examination, analysis and/or processing in an apparatus, for example in one of the apparatuses already mentioned above. The object **158**, **159** may be cleaned in method step S**4**, for example from contaminations consisting of ice. Further, information items may be created in method step S**5**, said information items being obtained, for example, by means of a light-microscopic examination of the object **158**, **159** by using the light microscope **800**. By way of example, these information items comprise the orientation of the object **158**, **159**, the location of contaminants present on the object **158**, **159** and/or the thickness of a layer of ice on the object **158**, **159**. Moreover, the object receiving container **125** may be arranged in a storage container or a transportation container in method step S**6**. Both the storage container and the transportation container may be cooled, for example with liquid nitrogen or liquid helium. In the transportation container, the object receiving container **125** may be transported from a first examination, analysis and/or processing apparatus to a second examination, analysis and/or processing apparatus.

FIG. **21** shows an optional method step S**7** for a method for examining, analyzing and/or processing the object **158**, **159**. Here, following method step S**6**, the object **158**, **159** may be transported in the transportation container to the light microscope **800** in method step S**7**. The object receiving container **125** may be taken from the transportation container and arranged at the holding device **114**. The holding device **114** may be suitable for introduction into the light microscope **800**. The holding device **114** may be introduced together with the object receiving container **125** into the light microscope **800**. Subsequently, the second container unit **130** may be moved relative to the first container unit **129** in such a way that the second container unit **130** may be arranged in the first position relative to the first container unit **129**. In the first position of the second container unit **130**, the object **158**, **159** arranged, for

example, in the first cavity **131** or in the second cavity **132** may be accessible and may be examined using the light microscope **800** by way of wide field light microscopy. The examination results and analysis results in respect of the object **158**, **159** obtained in this way, in particular the images of the object **158**, **159** recorded using the light microscope **800**, may be used, for example, for a correlation with examination results and analysis results in respect of the object **158**, **159** which may be obtained with the SEM **100**, for example. This correlation of examination results and analysis results, which were obtained using different apparatuses, also may be referred to as correlative microscopy. After completing the examination with the light microscope **800**, the second container unit **130** may be brought into the second position relative to the first container unit **129** such that the first cavity **131** and/or the second cavity **132**, in which the object **158**, **159** may be arranged, may be sealed and the object **158**, **159** may be no longer accessible. The object receiving container **125** then may be removed from the holding device **114** again and introduced into the transportation container.

Subsequently, further method steps of the method for examining, analyzing and/or processing the object **158**, **159** may be carried out.

FIG. **22** shows a further optional method step S**8** for a method for examining, analyzing and/or processing the object **158**, **159**. Following method step S**6** or S**7**, the object receiving container **125** having the object **158**, **159** may be transported in the transportation container to a confocal laser microscope in method step S**8**. The object receiving container **125** may be taken from the transportation container and arranged at the holding device **114**. The holding device **114** may be suitable for introduction into the confocal laser microscope. The holding device **114** may be introduced together with the object receiving container **125** into the confocal laser microscope. Subsequently, the second container unit **130** may be moved relative to the first container unit **129** in such a way that the second container unit **130** may be arranged in the first position relative to the first container unit **129**. In the first position of the second container unit **130**, the object **158**, **159** arranged, for example, in the first cavity **131** or in the second cavity **132** may be accessible and may be examined using the confocal laser microscope by way of fluorescence imaging. The examination results and analysis results in respect of the object **158**, **159** obtained in this way may be used, for example, for a correlation with examination results and analysis results in respect of the object **158**, **159** which may be obtained with the SEM **100**, for example. After completing the examination with the confocal laser microscope, the second container unit **130** may be brought into the second position relative to the first container unit **129** such that, in particular, the first cavity **131** and the second cavity **132**, in which the object **158**, **159** may be arranged, may be sealed and the object **158**, **159** may be no longer accessible. The object receiving container **125** then may be removed from the holding device **114** again and introduced into the transportation container.

Subsequently, further method steps of the method for examining, analyzing and/or processing the object may be carried out. FIG. **23** shows method steps of an embodiment of the method for examining, analyzing and/or processing the object **158**, **159**.

In method step S**9**, the object receiving container **125** having the object **158**, **159** may be transported in the transportation container to a beam apparatus, for example the SEM **100**, the combination apparatus **200** and/or the particle beam apparatus **400**, or to the apparatus **800**A for processing an object. The object receiving container **125** may be taken from the transportation container and arranged at the holding device **114**. The holding device **114** may be suitable for introduction into the SEM **100**, the combination apparatus **200**, the particle beam apparatus **400** and/or the apparatus **800**A for processing an object. In method step S**10**, the holding device **114** may be arranged at a transportation device. By way of example, the transportation device may be a device that is movable by means of a manipulator, which device may be movable, in particular, from a workstation arranged at the SEM **100**, at the combination apparatus **200** and/or at the particle beam apparatus **400** into the sample chamber **120** of the SEM **100**, into the sample chamber **201** of the combination apparatus **200** and/or into the sample chamber **426** of the particle beam apparatus **400**. By way of example, such a transportation device may be referred to as a "shuttle". In method step S**11**, the transportation device may be transported to the workstation and introduced therein. In the workstation, the second container unit **130** may be moved relative to the first container unit **129** in such a way that the second container unit **130** may be arranged in the first position relative to the first container unit **129**. In the first position of the second container unit **130**, the object **158**, **159** arranged, for example, in the first cavity **131** or in the second cavity **132** may be accessible and may be processed. By way of example, layers may be removed from the object **158**, **159** by means of a microtome or layers may be applied to the object **158**, **159** by means of a sputtering device. The workstation may be arranged at the SEM **100**, at the combination apparatus **200** and/or at the particle beam apparatus **400**. As an alternative thereto, the workstation, for example the apparatus **800**A for processing an object, may not be coupled to the SEM **100**, the combination apparatus **200** and/or the particle beam apparatus **400** but rather may be spatially separated from the SEM **100**, the combination apparatus **200** and/or the particle beam apparatus **400**. Once the processing of the object **158**, **159** has been completed, the second container unit **130** optionally may be moved into the second position relative to the first container unit **129** such that, in particular, the first cavity **131** and/or the second cavity **132**, in which the object **158**, **159** is arranged, are/is sealed and the object **158**, **159** is no longer accessible.

In method step S**12**, the transportation device and hence the object receiving container **125** arranged at the holding device **114** may be arranged in the SEM **100**, the combination apparatus **200** and/or the particle beam apparatus **400**. Subsequently, the object **158**, **159** may be examined, analyzed and/or processed in method step S**13**. To this end, should the second container unit **130** be situated in the second position relative to the first container unit **129**, the second container unit **130** may be moved relative to the first container unit **129** in such a way that the second container unit **130** may be arranged in the first position relative to the first container unit **129**. In the first position of the second container unit **130**, the object **158**, **159** arranged, for example, in the first cavity **131** or in the second cavity **132** may be accessible and may be examined, analyzed and/or processed. By way of example, layers might be applied to the object **158**, **159** by electron beam-induced deposition or ion beam-induced deposition, for example using a gas. In addition or as an alternative thereto, layers of the object **158**, **159** may be ablated by means of the ion beam. In addition or as an alternative thereto, the object **158**, **159** may be imaged by means of the electron beam and/or the ion beam. Yet again in addition or as an alternative thereto, interaction

radiation, in particular x-rays, may be detected and used for analyzing the object **158**, **159**.

After completing the examination, the analysis and/or the processing of the object **158**, **159**, the second container unit **130** may be brought into the second position relative to the first container unit **129** in method step S**14** such that, in particular, the first cavity **131** and the second cavity **132**, in which the object **158**, **159** may be arranged, are/is sealed and the object **158**, **159** is no longer accessible. The transportation device may be removed from the SEM **100**, the combination apparatus **200** and/or the particle beam apparatus **400** again. In method step S**15**, the holding device **114** may be removed from the transportation device. Moreover, the object receiving container **125** may be removed from the holding device **114** again in method step S**16**. In method step S**17**, the object receiving container **125** may be introduced into the transportation container. As an alternative thereto, the object **158**, **159** may be removed from the object receiving container **125** together with its holder and may be arranged in a sample container. The sample container in turn may be arranged in a Dewar filled with nitrogen. The sample container may be stored therein until the object is examined, analyzed and/or processed further.

In one embodiment of the method according to the system described herein, the object receiving container **125** may be introduced into the combination apparatus **200**. In this embodiment, regions on the object may be identified in method step S**13** by a superposition of image representations, which were created, firstly, with the light microscope **800** and, secondly, with the SEM **100**. In addition or as an alternative thereto, these regions may be identified by imaging with the SEM **100** or the ion beam apparatus **300**. Further, provision may be made, for example, for a precursor material to be arranged at these regions, in particular by ion beam-induced deposition, for example using a gas. The precursor material may serve the protection of the identified regions in particular. Subsequently, material of the object **158**, **159** may be ablated in the identified regions using the ion beam apparatus **300** until the object **158**, **159** may have a thickness of approximately 300 nm to 500 nm. Subsequently, material of the object **158**, **159** may be ablated in the identified regions using the ion beam apparatus **300** until the object **158**, **159** may have a thickness of 200 nm or less. If the transportation device, and hence also the object receiving container **125**, may be removed from the sample chamber **201** of the combination apparatus **200**, the transportation device may be introduced into the aforementioned workstation together with the holding device **114** in order to apply a material layer to the object **158**, **159** by means of a sputtering device so as to reduce the charging of the object **158**, **159** during a subsequent examination by means of a TEM.

In a further embodiment of the method according to the system described herein, in which the object receiving container **125** is introduced in the combination apparatus **200**, a portion of the object **158**, **159** of interest may be cut out of the object **158**, **159** by means of the ion beam apparatus **300** and fastened to a manipulator. By means of the manipulator, the portion of interest may be lifted out of the object **158**, **159** and fastened to a TEM object holder, which may be arranged at the object receiving container **125**. At least one of the method steps already described further above may be carried out in this embodiment. The portion of interest may be examined in a TEM.

Explicit reference is made to the fact that before each method step during which the object **158**, **159** arranged at the object receiving container **125** must be accessible, the second container unit **130** may be brought into the first position relative to the first container unit **129** such that, in particular, the first cavity **131** and/or the second cavity **132**, in which the object **158**, **159** may be arranged, may be opened and the object **158**, **159** may be accessible. If the object receiving container **125** is transported, then the second container unit **130** may be brought into the second position relative to the first container unit **129** such that, in particular, the first cavity **131** and/or the second cavity **132**, in which the object **158**, **159** may be arranged, may be sealed and the object **158**, **159** may not be accessible.

The object receiving container **125** allows safe and simple transportation between two examination apparatuses. In particular, the object receiving container **125** may ensure protection against contamination of the object **158**, **159** arranged in, for example, the first cavity **131** and/or the second cavity **132** on account of the relative movement of the second container unit **130** with respect to the first container unit **129** into the second position and on account of the cover obtained therewith. Moreover, the object receiving container **125** may ensure that the object **158**, **159** may be stored safely over a relatively long period of time, for example multiple days or months. Since the object **158**, **159** need not be removed from the object receiving container **125** during storage, for example in a nitrogen-cooled storage container, the orientation of the object **158**, **159** in the object receiving container **125** does not change. This simplifies a subsequent examination of the object **158**, **159** by means of an examination apparatus since the object receiving container **125** may be insertable into the examination apparatus after removing the object receiving container **125** from the storage container, with the orientation of the object **158**, **159** already known. In particular, information about the alignment and orientation of the object **158**, **159** may be arranged at the object receiving container **125** by means of a marking. Further, the object receiving container **125** may ensure that the latter may be arranged in as many different examination apparatuses as possible. The object receiving container **125** may be arranged at the holding device **114**. The holding device **114** may be configured in such a way that, by means of the holding device **114**, the object receiving container **125** may be arranged at a receiving device, for example the object stage **122**, **424** of the SEM **100**, of the combination apparatus **200**, of the particle beam apparatus **400**, of the light microscope **800**, of the mounting device **147**, and/or at the aforementioned workstation. In contrast to the prior art, the system described herein consequently makes it possible for the object **158**, **159** to not have to be arranged at respective different object holders, which have a physical configuration specified for a respective apparatus, for the purposes of examining and/or processing the object **158**, **159** in different apparatuses. Rather, the system described herein may provide for the object **158**, **159** to be arranged only once at the object receiving container **125** according to the system described herein, which then may be receivable in the various examination apparatuses.

The system described herein may ensure that an object **158**, **159** arranged in the object receiving container **125** is easily examinable, analyzable and/or processable with different work procedures under cryo-temperatures. By way of example, the object receiving container **125** may be used to examine and/or analyze the object **158**, **159** by means of x-ray spectroscopy, by means of near field scanning microscopy, by means of atomic force microscopy, by means of the combination apparatus **200**, by means of transmission electron microscopy, by means of Raman spectroscopy and/or by means of secondary ion mass spectrometry. In addition or

as an alternative thereto, the object receiving container **125** may be used when polishing the object **158**, **159**, when cutting the object **158**, **159** by means of a blade or a laser and/or when applying materials to the object **158**, **159**. The aforementioned lists should be understood to be illustrative. The object receiving container **125** may be used for any desired and suitable method.

FIG. **24** shows an embodiment of a further mounting device **147**A, by means of which, for example, the first object may be arranged in the first cavity **131** and the second object may be arranged in the second cavity **132** of the object receiving container **125** as per FIGS. **7** to **10**. The mounting device **147**A may have an interior **148**A, which may be surrounded by an insulated wall **149**A. A holder **150**A for the object receiving container **125** may be arranged in the interior **148**A. The object receiving container **125** may be arranged in a receptacle **154**A of the holder **150**A in order to mount the first object in the first cavity **131** and the second object in the second cavity **132** of the object receiving container **125**. The object receiving container **125** may be fastened in the receptacle **154**A by means of the fastening device **133**. To this end, an actuation tool engages in the first engagement opening **143** of the first spring end **141** and in the second engagement opening **144** of the second spring end **142** (cf. FIGS. **7** to **9**). Thereupon, the first spring end **141** and the second spring end **142** may be moved toward one another. Subsequently, the object receiving container **125** may be inserted into the receptacle **154**A. By removing the actuation tool from the first engagement opening **143** of the first spring end **141** and from the second engagement opening **144** of the second spring end **142**, the first spring end **141** and the second spring end **142** move apart, and so an outer surface of the fastening device **133** rests against an inner surface of the receptacle **154**A. In this way, the object receiving container **125** may be held in clamping fashion in the receptacle **154**A.

By filling the interior **148**A of the mounting device **147**A, for example with liquid nitrogen or liquid helium, the object receiving container **125** may be cooled to cryo-temperatures, and so the first object may be mounted in the first cavity **131** and the second object may be mounted in the second cavity **132** of the object receiving container **125** under cryo-temperatures. To this end, the clamping unit **135** embodied as a spring may be raised by a rod-shaped unit (not illustrated in FIG. **24**). By way of example, the rod-shaped unit may be raised and lowered by means of a sliding-block guide by moving an actuation unit **157**A (cf. FIG. **25**). Subsequently, the holder **150**A may be rotated through a predefinable angle. By way of example, the holder **150**A may be rotated in such a way (cf. FIG. **26**) that the object receiving container **125** may be oriented in such a way that the first object is insertable into a sliding device **170**A and slides into the first cavity **131** under the action of gravity. To this end, the first object may be taken from a storage container **171**A and placed against and inserted into the sliding device **170**A. Further, the second object is taken from the storage container **171**A and inserted into the sliding device **170**A. The second object slides into the second cavity **132** under the action of gravity. In particular, the object receiving container **125** may be oriented in such a way that the first object slides into the first cavity **131** in substantially vertical fashion or in vertical fashion from the sliding device **170**A. In particular, the object receiving container **125** may be oriented in such a way that the second object slides into the second cavity **132** in substantially vertical fashion or in vertical fashion from the sliding device **170**A. Subsequently, the clamping unit **135** may be lowered by the rod-shaped unit **155**, and so the first object is held in securely clamping fashion in the first cavity **131** and the second object is held in securely clamping fashion in the second cavity **132** of the object receiving container **125**.

In one embodiment, the holder **150**A may subsequently be rotated into the original position through the predefinable angle again. By way of example, the object receiving container **125** then may be arranged at the holding device **114** or at a further holding device **114**A (cf. FIG. **24**). The holding device **114** and the further holding device **114**A differ from one another in terms of the physical configuration. By way of example, the holding device **114** may only be used in a first examination, analysis and/or processing apparatus. By contrast, the further holding device **114**A may only be used in a second examination, analysis and/or processing apparatus. As an alternative thereto, the object receiving container **125** may be inserted in a transportation box **172**A. The transportation box **172**A then may be sealed with a lid **173**A, which may be arranged at the holding device **150**A.

The features of the system described herein, in the written description of the specification, drawings and the claims, may be essential for the realization of the invention in the various embodiments thereof, both individually and in arbitrary combinations. The invention is not restricted to the described embodiments. It may be varied within the scope of the claims and taking into account the knowledge of the relevant person skilled in the art. Other embodiments of the invention will be apparent to those skilled in the art from a consideration of the specification and/or an attempt to put into practice the system described herein. It is intended that the specification and examples be considered as illustrative only, with the true scope and spirit of the invention being indicated by the following claims.

What is claimed is:

1. A method of examining, analyzing and/or processing an object at cryo-temperatures, comprising one of the following:

examining, analyzing and/or processing the object using an object receiving container that receives at least one object, which is examinable, analyzable and/or processable at cryo-temperatures, the object receiving container including a first container unit, at least one cavity, arranged at the first container unit, that receives the object, a second container unit that is movable relative to the first container unit, wherein the second container unit is able to be brought into a first position relative to the first container unit to make the object accessible and into a second position relative to the first container unit and wherein the second container unit in the second position covers the at least one cavity arranged at the first container unit to make the object inaccessible, the object receiving container also including at least one fastening device which is arranged at the first container unit or at the second container unit to arrange the object receiving container at a holding device, wherein gravity is used to move the second container unit into either the first position or the second position;

examining, analyzing and/or processing the object using an object holding system that includes an object receiving container and a holding device, wherein the object receiving container receives at least one object, which is examinable, analyzable and/or processable at cryo-temperatures, the object receiving container including a first container unit, at least one cavity, arranged at the first container unit, that receives the object, a second container unit that is movable relative to the first

container unit, wherein the second container unit is able to be brought into a first position relative to the first container unit to make the object accessible and into a second position relative to the first container unit and wherein the second container unit in the second position covers the at least one cavity arranged at the first container unit to make the object inaccessible, the object receiving container also including at least one fastening device which is arranged at the first container unit or at the second container unit to arrange the object receiving container at the holding device and wherein the holding device has a receptacle and wherein the at least one fastening device of the object receiving container is arranged at the receptacle, wherein gravity is used to move the second container unit into either the first position or the second position;

examining, analyzing and/or processing the object using a beam apparatus that includes at least one beam generator that generates a beam, at least one objective lens that focuses the beam onto the object, at least one display device that displays an image and/or an analysis of the object, and at least one cooling device that cools the object to cryo-temperatures, wherein an object receiving container is arranged at the cooling device and wherein the object receiving container receives at least one object, which is examinable, analyzable and/or processable at cryo-temperatures, the object receiving container including a first container unit, at least one cavity, arranged at the first container unit, that receives the object, a second container unit that is movable relative to the first container unit, wherein the second container unit is able to be brought into a first position relative to the first container unit to make the object accessible and into a second position relative to the first container unit and wherein the second container unit in the second position covers the at least one cavity arranged at the first container unit to make the object inaccessible, the object receiving container also including at least one fastening device which is arranged at the first container unit or at the second container unit to arrange the object receiving container at a holding device, wherein gravity is used to move the second container unit into either the first position or the second position; and

examining, analyzing and/or processing the object using an apparatus that processes the object and includes at least one cooling device that cools the object to cryo-temperatures, wherein either an object receiving container or an object holding system is arranged at the cooling device and wherein the object holding system includes the object receiving container and a holding device and wherein the object receiving container receives at least one object, which is examinable, analyzable and/or processable at cryo-temperatures, the object receiving container including a first container unit, at least one cavity, arranged at the first container unit, that receives the object, a second container unit that is movable relative to the first container unit, wherein the second container unit is able to be brought into a first position relative to the first container unit to make the object accessible and into a second position relative to the first container unit and wherein the second container unit in the second position covers the at least one cavity arranged at the first container unit to make the object inaccessible, the object receiving container also including at least one fastening device which is arranged at the first container unit or at the second container unit to arrange the object receiving container at the holding device, wherein gravity is used to move the second container unit into either the first position or the second position.

2. The method as claimed in claim **1**, further comprising:

moving the second container unit relative to the first container unit in such a way that the second container unit adopts the first position relative to the first container unit and that the cavity arranged at the first container unit is accessible;

arranging the object in the cavity;

moving the second container unit relative to the first container unit in such a way that the second container unit adopts the second position and that the cavity arranged in the first container unit is covered by the second container unit;

arranging the object receiving container at the holding device by arranging the fastening device of the object receiving container at the receptacle of the holding device in such a way that the fastening device is held at the receptacle;

introducing the holding device into the beam apparatus or the apparatus for processing the object;

arranging the holding device at the cooling device;

moving the second container unit relative to the first container unit in such a way that the second container unit adopts the first position and that the object arranged in the cavity is accessible; and

examining, analyzing and/or processing the object using the beam apparatus or using the apparatus for processing the object.

3. The method as claimed in claim **2**, comprising:

arranging the holding device at a transportation device;

introducing the transportation device into the beam apparatus; and

arranging the transportation device at the cooling device.

4. The method as claimed in claim **1**, wherein the second container unit is arranged at a displacing device in such a way that the second container unit is able to be displaced into the first position and/or into the second position relative to the first container unit.

5. The method as claimed in claim **1**, wherein the object receiving container includes at least one hinge device which is arranged both at the first container unit and at the second container unit in such a way that the second container unit is able to be brought into the first position and/or into the second position relative to the first container unit.

6. The method as claimed in claim **1**, wherein the object receiving container includes one of the following features:

(i) the fastening device includes a spring device;

(ii) the fastening device includes a clamping device;

(iii) the fastening device includes a first clamping part and a second clamping part;

(iv) the fastening device includes a snap ring;

(v) the fastening device includes a screw; and

(vi) the fastening device includes an eccentric disk.

7. The method as claimed in claim **1**, wherein:

the fastening device has at least one first spring end and at least one second spring end,

the first spring end and the second spring end are arranged at a distance from one another, and

the first spring end is embodied so as to be movable relative to the second spring end.

8. The method as claimed in claim **7**, wherein:

the first spring end has a first engagement opening for the engagement of an actuation tool, and

the second spring end has a second engagement opening for the engagement of the actuation tool.

9. The method as claimed in claim **1**, wherein:

the first container unit has a first surface, wherein the first surface is arranged in a first plane,

the second container unit has a second surface, wherein the second surface is arranged in a second plane,

in the second position of the second container unit relative to the first container unit, the first surface of the first container unit rests against the second surface of the second container unit in such a way that the cavity is covered by the second surface of the second container unit, and in the first position of the second container unit relative to the first container unit, the first surface, of the first container unit is arranged with respect to the second surface of the second container unit in such a way that the first plane is aligned with respect to the second plane as follows:

(i) the first plane is aligned parallel to the second plane; or

(ii) the first plane is identical to the second plane; or

(iii) the first plane is aligned at an angle of more than 5° with respect to the second plane.

10. The method as claimed in claim **1**, wherein:

the cavity has at least one first cavity opening and at least one second cavity opening,

the second container unit covers the first cavity opening in the second position of the second container unit relative to the first container unit, and

a covering device for covering the second cavity opening is arranged at the second cavity opening.

11. The method as claimed in claim **10**, wherein the first cavity opening and the second cavity opening are arranged opposite one another.

12. The method as claimed in claim **10**, wherein the covering device is embodied as a sliding device.

13. The method as claimed in claim **1**, wherein the cavity has at least one first cavity opening and at least one second cavity opening.

14. The method as claimed in claim **13**, further comprising:

moving a covering device in relative fashion to cover or expose the second cavity opening.

* * * * *