US012384547B2

(12) **United States Patent**
Graves

(10) **Patent No.: US 12,384,547 B2**
(45) **Date of Patent: Aug. 12, 2025**

(54) **SYSTEMS AND METHODS FOR IMPROVED GEARBOXES FOR EVTOL AIRCRAFT**

(71) Applicant: **Archer Aviation Inc.**, San Jose, CA (US)

(72) Inventor: **Scott Graves**, Felton, CA (US)

(73) Assignee: **Archer Aviation Inc.**, San Jose, CA (US)

(*) Notice: Subject to any disclaimer, the term of this patent is extended or adjusted under 35 U.S.C. 154(b) by 0 days.

(21) Appl. No.: **18/912,008**

(22) Filed: **Oct. 10, 2024**

(65) **Prior Publication Data**

US 2025/0033782 A1 Jan. 30, 2025

Related U.S. Application Data

(63) Continuation of application No. 18/526,524, filed on Dec. 1, 2023, which is a continuation of application

(Continued)

(51) **Int. Cl.**
H02K 7/04 (2006.01)
B60L 15/06 (2006.01)

(Continued)

(52) **U.S. Cl.**
CPC ***B64D 27/24*** (2013.01); ***B60L 15/06*** (2013.01); ***B60L 15/38*** (2013.01); ***B64C 27/54*** (2013.01); ***B64C 29/0008*** (2013.01); ***B64C 29/0033*** (2013.01); ***B64D 27/30*** (2024.01); ***B64D 33/08*** (2013.01); ***B64D 35/02*** (2013.01);

(Continued)

(58) **Field of Classification Search**
None
See application file for complete search history.

(56) **References Cited**

U.S. PATENT DOCUMENTS

2,135,477 A 11/1938 Griswold
2,477,024 A 7/1949 Webster

(Continued)

FOREIGN PATENT DOCUMENTS

CN 2507177 Y 8/2002
CN 201887602 U 6/2011

(Continued)

OTHER PUBLICATIONS

"Flex without the Flex", cy384, Nov. 12, 2020, http://www.cy384.com/blog/flex-pcbs.html. 5 pages.

(Continued)

Primary Examiner — Kayla Mccaffrey
(74) *Attorney, Agent, or Firm* — Finnegan, Henderson, Farabow, Garrett & Dunner, LLP

(57) **ABSTRACT**

A method for balancing a rotor of an electric engine, comprising: identifying an axis of rotation of the rotor, determining an imbalance present in the rotor by rotating the rotor about the axis of rotation, wherein determining the imbalance includes rotating the rotor and detecting an amplitude of the imbalance. The method further comprising: calculating an amount of mass to remove at a position along an inner circumference of the rotor such that a center of mass of the rotor coincides with the axis of rotation of the rotor and removing the amount of mass from the inner circumference of the rotor.

30 Claims, 66 Drawing Sheets

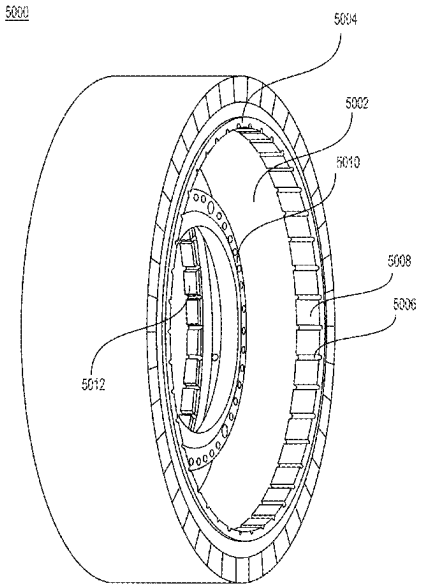

Related U.S. Application Data

No. 18/148,688, filed on Dec. 30, 2022, now Pat. No. 11,912,424.

(60) Provisional application No. 63/378,680, filed on Oct. 7, 2022, provisional application No. 63/378,536, filed on Oct. 6, 2022.

(51) **Int. Cl.**

B60L 15/38	(2006.01)
B64C 27/54	(2006.01)
B64C 29/00	(2006.01)
B64D 27/24	(2006.01)
B64D 27/30	(2024.01)
B64D 33/08	(2006.01)
B64D 35/02	(2006.01)
F16B 2/06	(2006.01)
F16H 57/08	(2006.01)
H02K 1/27	(2022.01)
H02K 1/32	(2006.01)
H02K 5/124	(2006.01)
H02K 5/20	(2006.01)
H02K 7/08	(2006.01)
H02K 7/116	(2006.01)
H02K 9/19	(2006.01)
H02K 11/33	(2016.01)
H02K 15/03	(2006.01)
H02M 7/5395	(2006.01)
H02P 21/00	(2016.01)
H02P 25/16	(2006.01)
H02P 27/06	(2006.01)
H02P 27/08	(2006.01)
H02K 7/00	(2006.01)

(52) **U.S. Cl.**

CPC ***F16B 2/06*** (2013.01); ***F16H 57/08*** (2013.01); ***H02K 1/27*** (2013.01); ***H02K 1/32*** (2013.01); ***H02K 5/124*** (2013.01); ***H02K 5/203*** (2021.01); ***H02K 7/08*** (2013.01); ***H02K 7/116*** (2013.01); ***H02K 9/19*** (2013.01); ***H02K 11/33*** (2016.01); ***H02K 15/03*** (2013.01); ***H02M 7/5395*** (2013.01); ***H02P 21/50*** (2016.02); ***H02P 25/16*** (2013.01); ***H02P 27/06*** (2013.01); ***H02P 27/08*** (2013.01); *B60L 2200/10* (2013.01); *B60L 2210/40* (2013.01); *H02K 7/006* (2013.01)

(56) **References Cited**

U.S. PATENT DOCUMENTS

3,087,078	A	4/1963	Brown	
3,217,193	A	11/1965	Rayner	
3,802,795	A	4/1974	Nyeste et al.	
3,854,339	A *	12/1974	Muller	G01M 1/22 73/462
3,909,584	A	9/1975	Brienza et al.	
4,092,946	A	6/1978	Kappas	
4,544,166	A	10/1985	Karasawa	
5,443,130	A	8/1995	Tanaka et al.	
5,461,636	A	10/1995	Karube et al.	
5,742,484	A	4/1998	Gillette et al.	
5,831,358	A	11/1998	Bobay	
5,833,566	A	11/1998	Showalter	
5,871,314	A *	2/1999	Trionfetti	G01M 1/34 73/462
6,520,012	B1 *	2/2003	Schonfeld	G01M 1/34 73/462
6,743,135	B2	6/2004	Klemen et al.	
7,069,654	B2 *	7/2006	Robbins	G01M 1/34 73/461
7,753,151	B2	7/2010	Marsh et al.	
8,251,861	B2	8/2012	Varela	
8,313,403	B2	11/2012	Wilson, Jr.	
8,360,928	B2	1/2013	Tabata et al.	
8,371,978	B2	2/2013	Nobata et al.	
8,393,791	B2	3/2013	Thornton et al.	
8,427,019	B2	4/2013	Garriga et al.	
8,480,528	B2	7/2013	Wilhelm et al.	
8,531,072	B2	9/2013	Wishart	
8,649,925	B2	2/2014	Light et al.	
8,650,980	B2	2/2014	Lafer et al.	
8,692,425	B2	4/2014	Creviston et al.	
8,771,123	B2	7/2014	Palfai et al.	
9,163,715	B2	10/2015	Valente	
9,216,804	B2	12/2015	Van Der Laan et al.	
9,272,777	B2	3/2016	Mcglaun et al.	
9,306,433	B2	4/2016	Sten et al.	
9,413,208	B2	8/2016	Pal	
9,482,269	B2	11/2016	Fruin et al.	
9,677,663	B2	6/2017	Sammataro et al.	
9,689,466	B2	6/2017	Kanai et al.	
9,702,255	B2	7/2017	Martin et al.	
9,787,164	B2	10/2017	Buttner et al.	
9,917,488	B2	3/2018	Major	
9,994,305	B1	6/2018	Moldovan	
10,017,247	B1	7/2018	Elliott et al.	
10,116,187	B1	10/2018	Wishart	
10,145,753	B2	12/2018	Perelman et al.	
10,220,698	B2	3/2019	Shibata et al.	
10,302,185	B2	5/2019	Kawakami et al.	
10,351,235	B2	7/2019	Karem et al.	
10,392,089	B2	8/2019	Bentgen et al.	
10,476,351	B2	11/2019	Francis et al.	
10,502,312	B1	12/2019	Jaszewski et al.	
10,598,269	B2	3/2020	Pydin	
10,679,586	B2	6/2020	Poster	
10,850,841	B2	12/2020	Bonden et al.	
10,967,934	B2	4/2021	Ferguson	
11,005,318	B2	5/2021	Nakane et al.	
11,059,598	B2	7/2021	Arkus et al.	
11,105,340	B2	8/2021	Cheung et al.	
11,213,934	B2	1/2022	Bandy et al.	
11,305,869	B1	4/2022	Ward	
11,401,042	B2	8/2022	Peleg	
11,413,946	B2	8/2022	Absenger et al.	
11,414,198	B2	8/2022	Harvey	
11,440,401	B2	9/2022	Sugimoto et al.	
11,447,004	B2	9/2022	Misu et al.	
11,453,286	B2	9/2022	Wishart	
11,465,488	B2	10/2022	Li et al.	
11,912,424	B1	2/2024	Graves	
2004/0195044	A1	10/2004	Kimura et al.	
2005/0206251	A1	9/2005	Foster	
2006/0272420	A1 *	12/2006	Serrano	F16F 15/00 73/649
2008/0022981	A1	1/2008	Keyaki et al.	
2009/0206709	A1	8/2009	Kakuda et al.	
2012/0021621	A1	1/2012	Kim	
2012/0091833	A1	4/2012	Hackett et al.	
2013/0126669	A1	5/2013	Hamann et al.	
2013/0255416	A1	10/2013	Terauchi	
2014/0151495	A1	6/2014	Kuhn, Jr.	
2014/0274528	A1	9/2014	Valente et al.	
2015/0044075	A1	2/2015	Abe et al.	
2016/0013704	A1	1/2016	Wagner et al.	
2016/0123417	A1	5/2016	Rehfus et al.	
2016/0341281	A1	11/2016	Brunvold et al.	
2018/0056774	A1	3/2018	Chan	
2018/0180164	A1	6/2018	Hagino	
2018/0283524	A1	10/2018	Uematsu et al.	
2018/0363762	A1	12/2018	Kiyokami et al.	
2019/0063503	A1	2/2019	Nowoisky et al.	
2019/0211841	A1	7/2019	Cottrell et al.	
2019/0285168	A1	9/2019	Ikeda et al.	
2019/0319551	A1	10/2019	Song et al.	
2019/0366951	A1	12/2019	Young et al.	
2020/0140049	A1	5/2020	Gil et al.	

(56) **References Cited**

U.S. PATENT DOCUMENTS

2020/0149534	A1	5/2020	Wetterau
2020/0215920	A1	7/2020	Suyama et al.
2020/0262574	A1	8/2020	Peleg
2020/0361622	A1	11/2020	Groninga et al.
2020/0385139	A1	12/2020	Verna et al.
2021/0018089	A1	1/2021	Guarino
2021/0053433	A1	2/2021	Gyarmati et al.
2021/0104935	A1	4/2021	Morrison
2021/0107620	A1	4/2021	Weekes et al.
2021/0190201	A1	6/2021	Shimokobe et al.
2021/0226518	A1	7/2021	Hung et al.
2021/0254705	A1	8/2021	Olson et al.
2021/0276702	A1	9/2021	Heironimus et al.
2021/0291971	A1	9/2021	Bernard
2021/0328482	A1	10/2021	Rutowski et al.
2021/0336510	A1	10/2021	Yang et al.
2021/0339881	A1	11/2021	Bevirt et al.
2021/0344255	A1	11/2021	Said et al.
2021/0403155	A1	12/2021	Neiser
2022/0069664	A1	3/2022	Kim et al.
2022/0119121	A1	4/2022	Lacaux et al.
2022/0135179	A1	5/2022	Lee
2022/0145806	A1	5/2022	Beck et al.
2022/0186670	A1	6/2022	Blake et al.
2022/0190764	A1	6/2022	Yoon
2022/0221048	A1	7/2022	Remboski et al.
2022/0250756	A1	8/2022	Wagner et al.
2022/0252146	A1	8/2022	Hart et al.
2022/0263384	A1	8/2022	Kapatral et al.
2022/0267020	A1	8/2022	Warbeck
2022/0289371	A1	9/2022	Schroeder et al.
2022/0294295	A1	9/2022	Yang et al.
2022/0297848	A1	9/2022	Sivalingam et al.
2022/0306300	A1	9/2022	Matsumoto
2022/0306305	A1	9/2022	Cottrell et al.
2022/0315237	A1	10/2022	Fukuchi
2022/0316582	A1	10/2022	Inoue
2022/0357223	A1	11/2022	Khazaai et al.
2022/0360133	A1	11/2022	Striedelmeyer

FOREIGN PATENT DOCUMENTS

CN	202997950	U	6/2013
CN	108390577	A	8/2018
CN	208907678	U	5/2019
CN	209516989	U	10/2019
CN	113410060	B	4/2022
DE	202012101392	U1	5/2012
DE	102019213857	A1	3/2021
EP	0052015	B1	5/1982
EP	0488434	B1	6/1992
EP	2650567	A1	10/2013
EP	3139044	B1	3/2017
EP	2735501	B1	6/2018
EP	3078534	B1	8/2019
EP	3919376	A1	12/2021
EP	3939890	A1	1/2022
EP	4071983	A1	10/2022
WO	2012042806	A1	4/2012
WO	2014114560	A1	7/2014
WO	2017166811	A1	10/2017
WO	2018026735	A1	2/2018
WO	2019099378	A1	5/2019
WO	2021114606	A1	6/2021
WO	2021222528	A1	11/2021
WO	2021236576	A1	11/2021
WO	2022074405	A1	4/2022
WO	2022076531	A1	4/2022
WO	2022123229	A1	6/2022
WO	2022135939	A1	6/2022
WO	2022156546	A1	7/2022
WO	2022197838	A1	9/2022
WO	2022213209	A1	10/2022
WO	2022223810	A1	10/2022

OTHER PUBLICATIONS

"Endless-Snake Flexible Printed Circuits", Leiton, May 20, 2022. 4 pages.

"Things to Know About PCB for LED Strips", MyLedy, Sep. 13, 2021. 12 pages.

Ing, W. et al., "New Generation of Intelligent Electromechanical Valve Actuation", 11th International Fluid Power Conference 2018, 5 pages.

Jeon, D. et al., "4 Types of Enclosures for Large Motors", TMEIC, Jul. 4, 2021, 8 pages.

PCT International Search Report and Written Opinion mailed Dec. 14, 2023, issued in counterpart International Application No. PCT/US2023/076299 (10 pgs.).

* cited by examiner

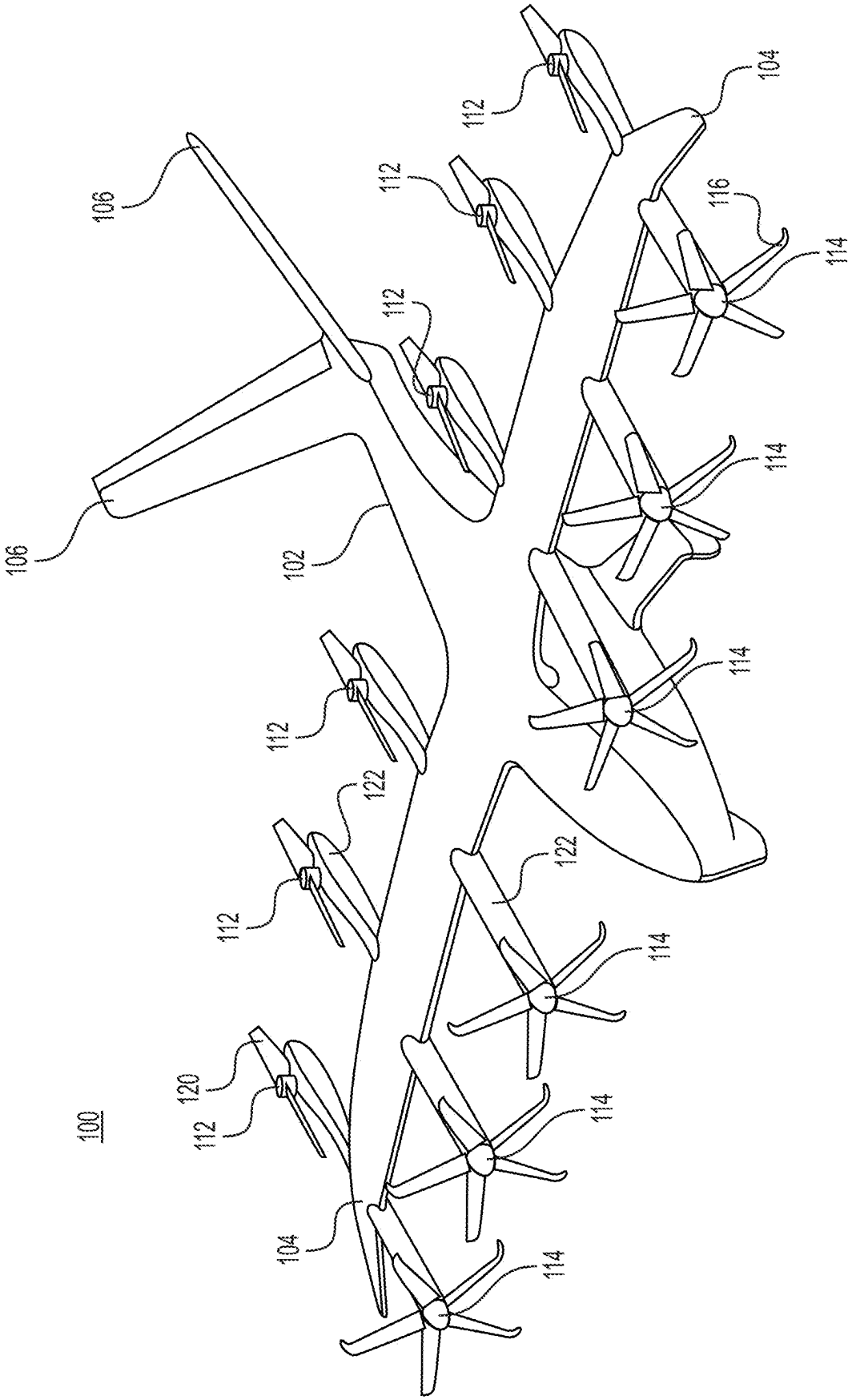
100
106
106
102
104
104
112
112
112
112
112
112
112
112
114
114
114
114
114
114
116
120
122
122

FIG. 1

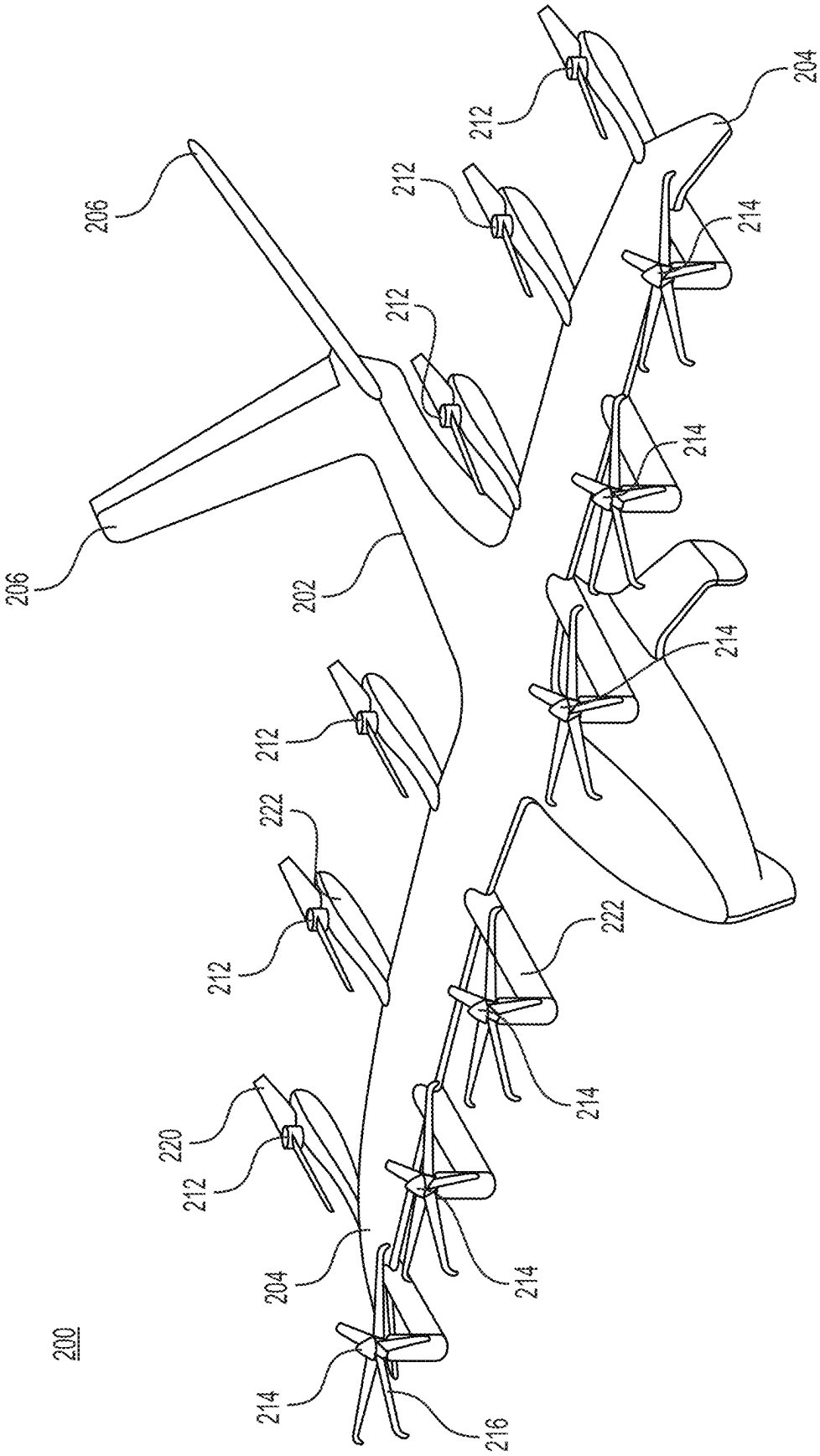
200
206
206
202
204
204
212
212
212
212
212
212
212
214
214
214
214
214
214
214
216
220
222
222

FIG. 2

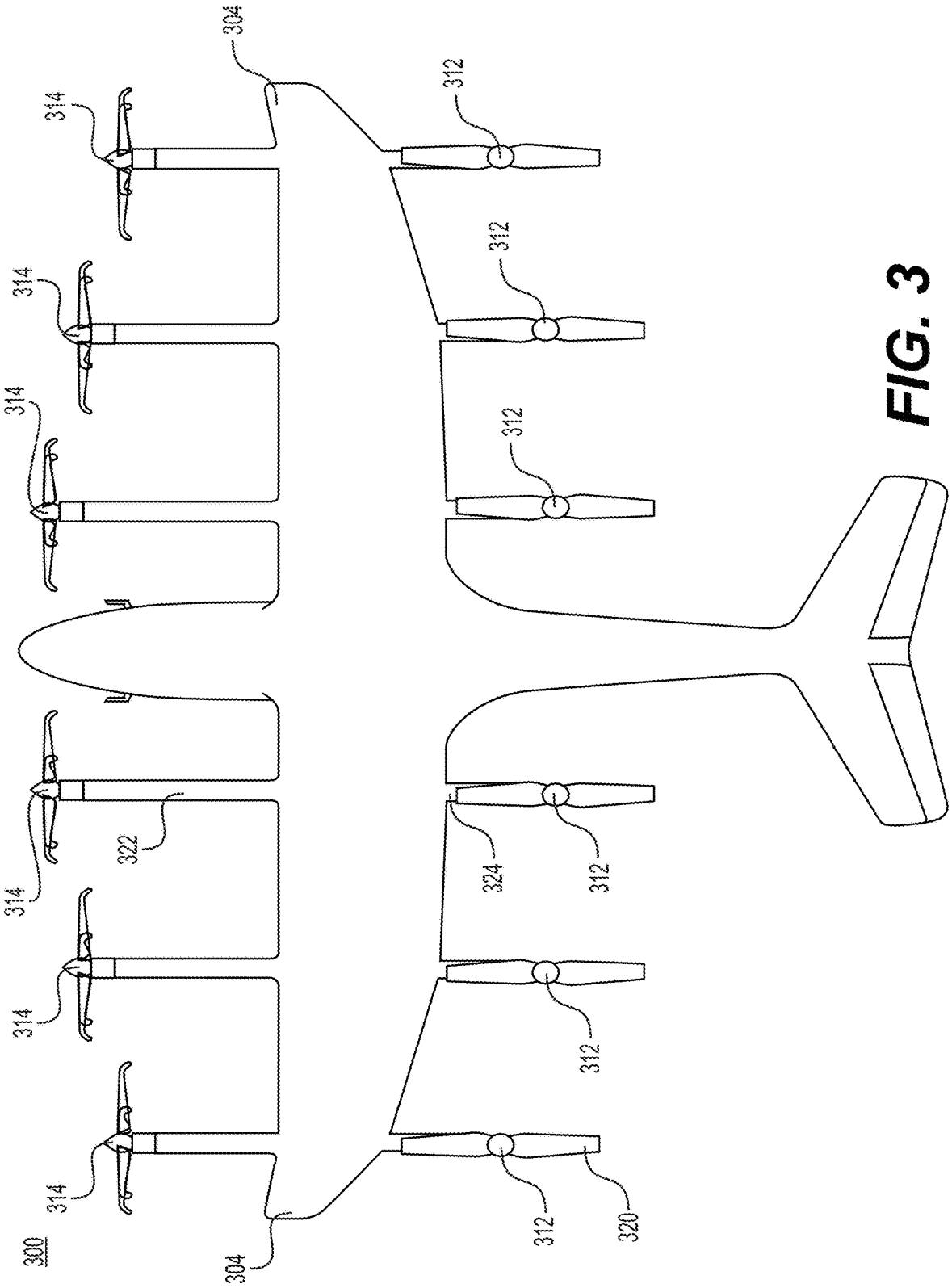
300
304
304
312
312
312
312
312
312
312
314
314
314
314
314
314
320
322
324

FIG. 3

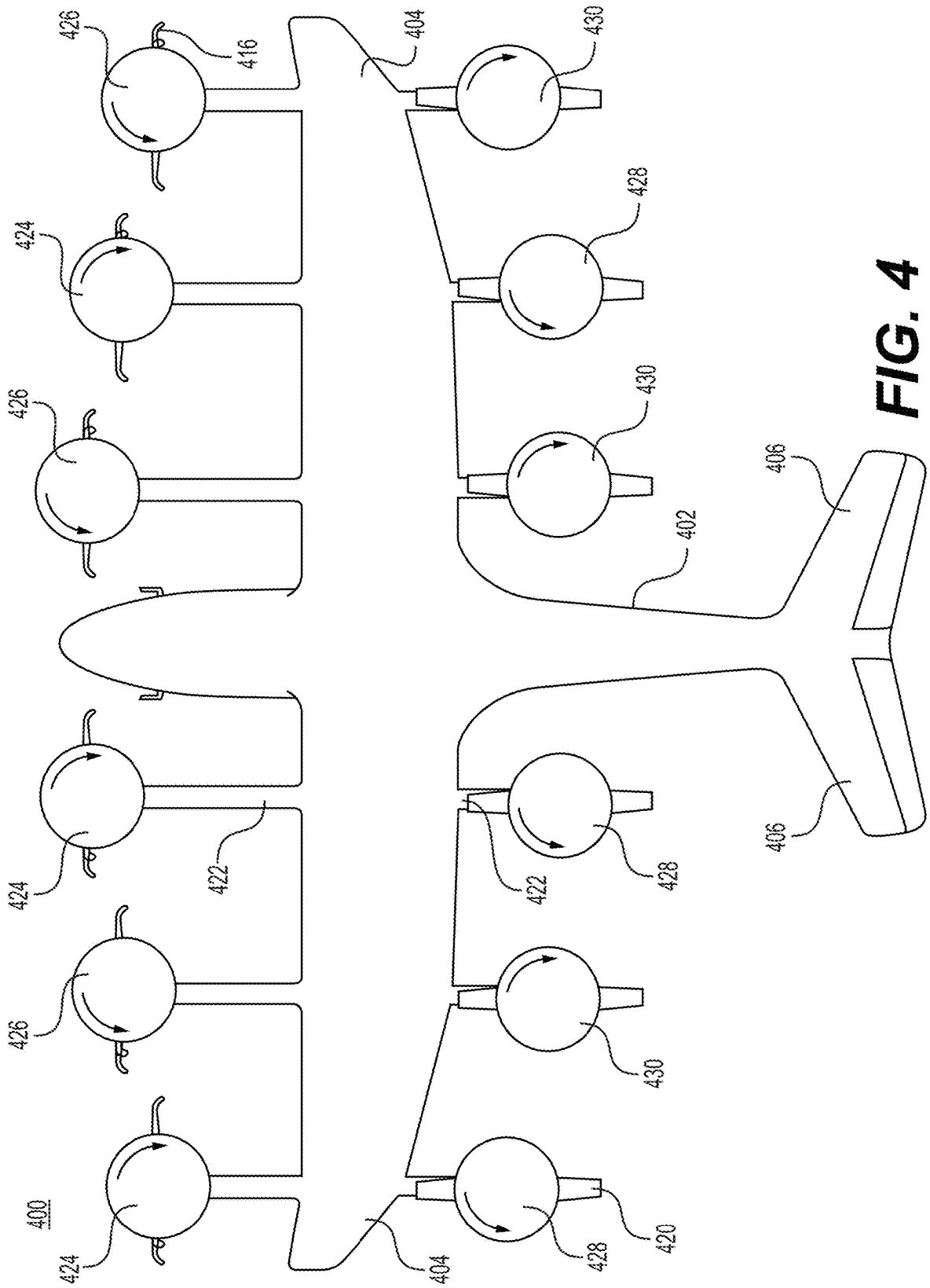
400
424
426
424
426
424
426
416
422
404
404
422
428
428
428
430
430
430
420
402
406
406

FIG. 4

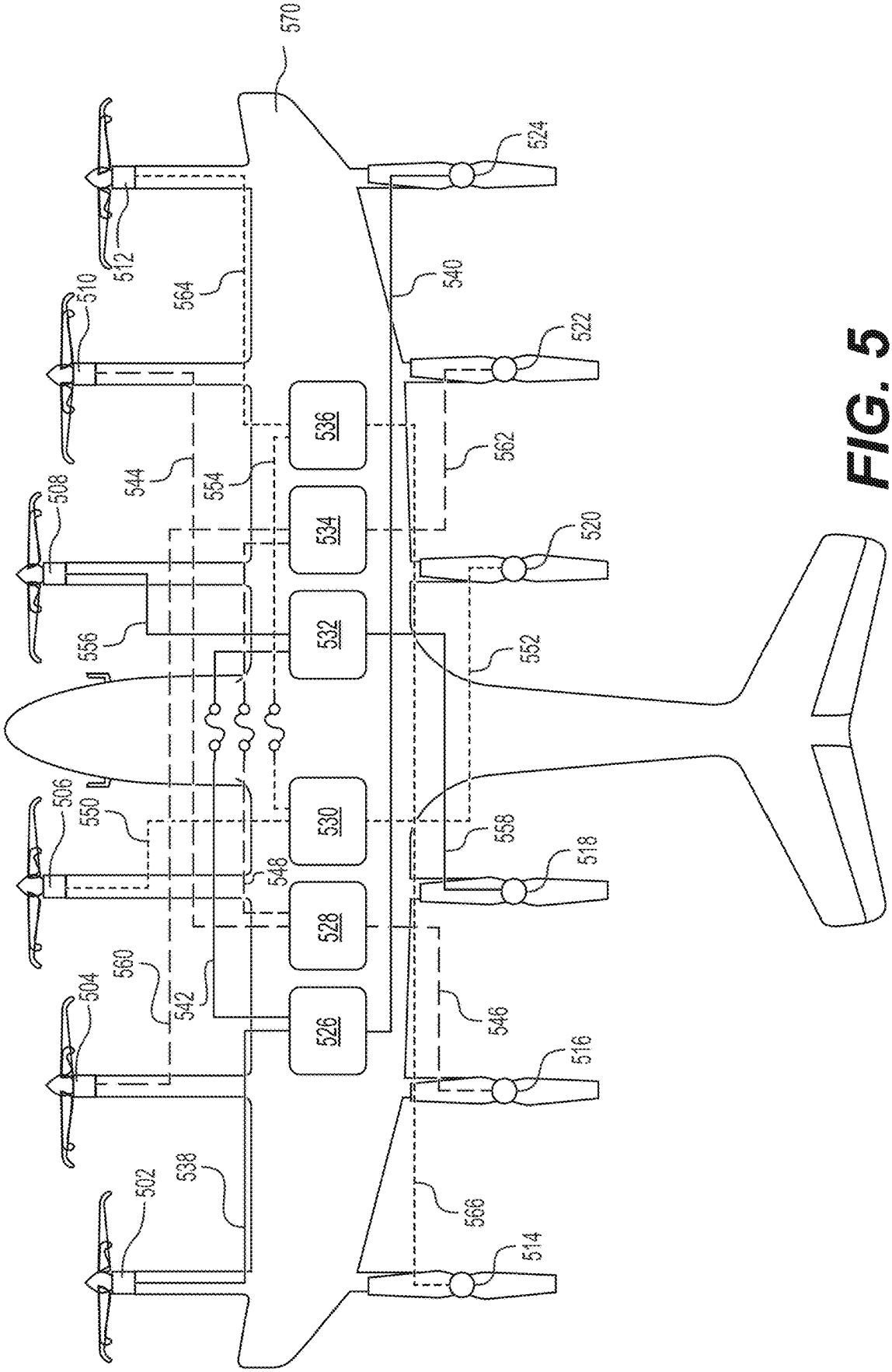
570
524
512
564
540
510
522
536
562
544
554
508
534
520
556
532
552
506
550
530
558
518
548
528
560
542
546
504
526
516
538
502
566
514

FIG. 5

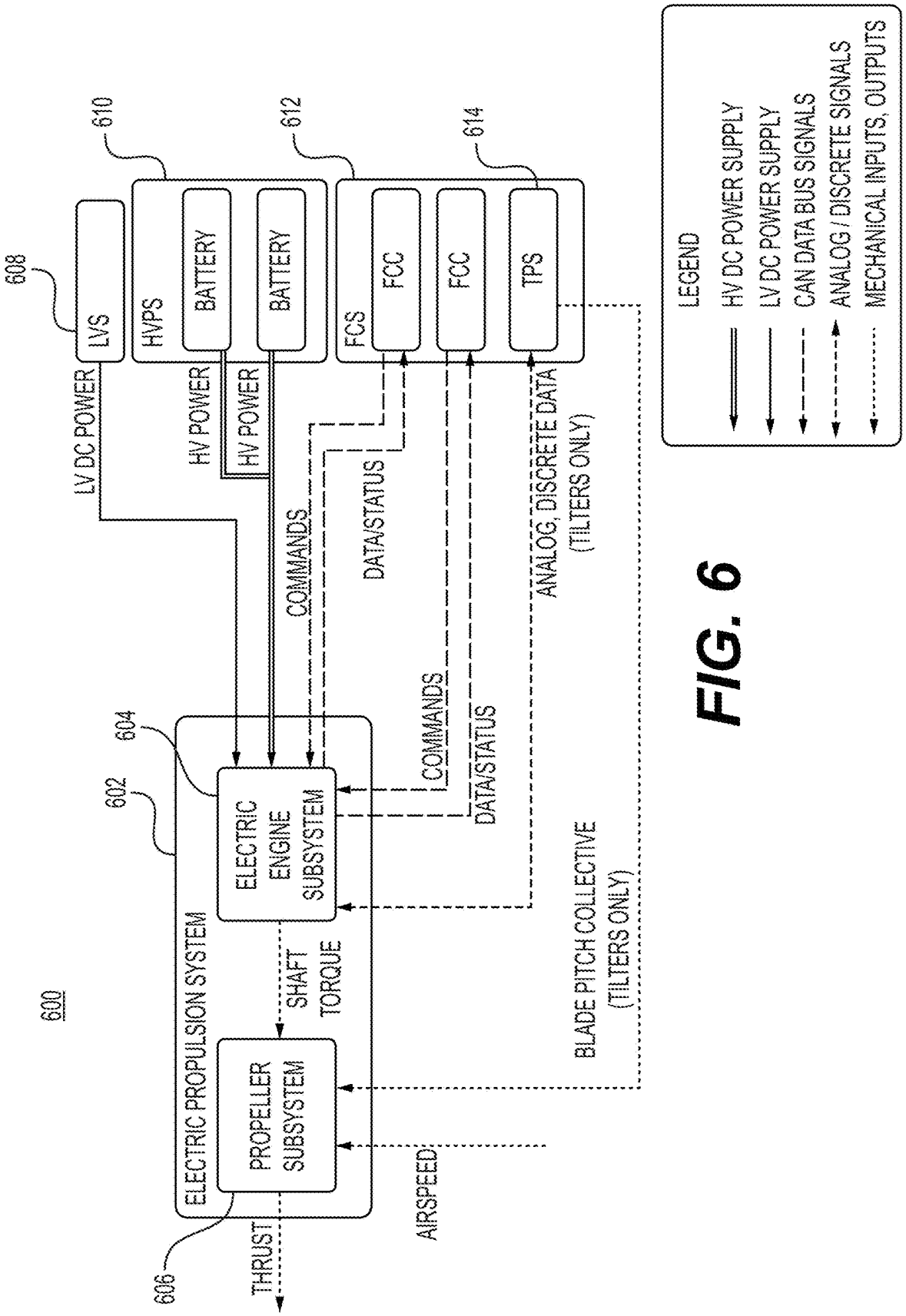
600
608
LVS
610
HVPS
BATTERY
BATTERY
612
FCS
FCC
FCC
614
TPS
LV DC POWER
HV POWER
HV POWER
COMMANDS
DATA/STATUS
ANALOG, DISCRETE DATA
(TILTERS ONLY)
COMMANDS
DATA/STATUS
604
602
ELECTRIC
ENGINE
SUBSYSTEM
ELECTRIC PROPULSION SYSTEM
SHAFT
TORQUE
BLADE PITCH COLLECTIVE
(TILTERS ONLY)
PROPELLER
SUBSYSTEM
AIRSPEED
606
THRUST
LEGEND
HV DC POWER SUPPLY
LV DC POWER SUPPLY
CAN DATA BUS SIGNALS
ANALOG / DISCRETE SIGNALS
MECHANICAL INPUTS, OUTPUTS

FIG. 6

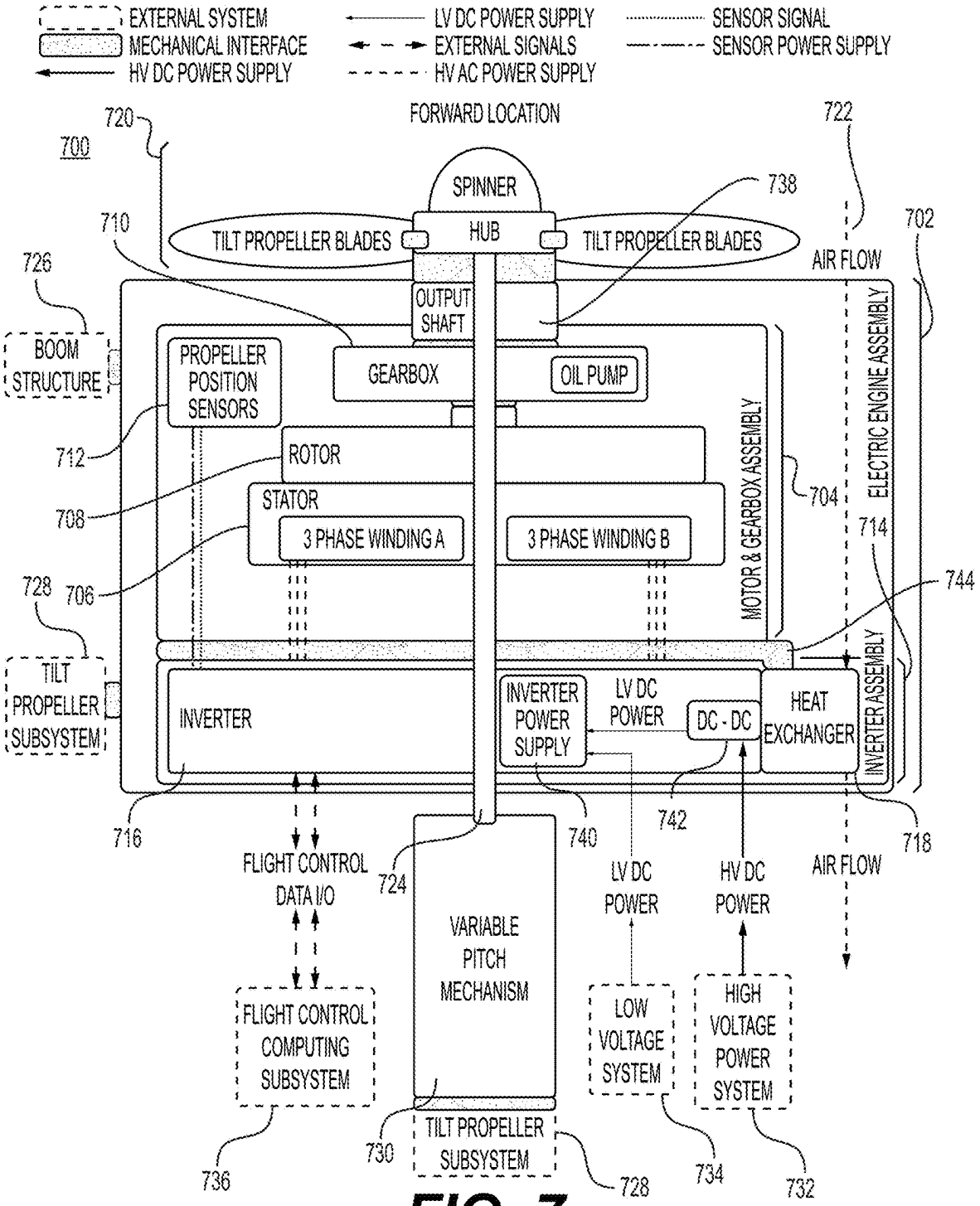
EXTERNAL SYSTEM
MECHANICAL INTERFACE
HV DC POWER SUPPLY
LV DC POWER SUPPLY
EXTERNAL SIGNALS
HV AC POWER SUPPLY
SENSOR SIGNAL
SENSOR POWER SUPPLY
FORWARD LOCATION
700
720
722
702
SPINNER
HUB
TILT PROPELLER BLADES
TILT PROPELLER BLADES
738
710
726
AIR FLOW
OUTPUT SHAFT
BOOM STRUCTURE
PROPELLER POSITION SENSORS
GEARBOX
OIL PUMP
ELECTRIC ENGINE ASSEMBLY
712
ROTOR
MOTOR & GEARBOX ASSEMBLY
704
708
STATOR
3 PHASE WINDING A
3 PHASE WINDING B
714
728
706
744
TILT PROPELLER SUBSYSTEM
INVERTER
INVERTER POWER SUPPLY
LV DC POWER
DC - DC
HEAT EXCHANGER
INVERTER ASSEMBLY
716
740
742
718
FLIGHT CONTROL DATA I/O
724
LV DC POWER
HV DC POWER
AIR FLOW
VARIABLE PITCH MECHANISM
FLIGHT CONTROL COMPUTING SUBSYSTEM
LOW VOLTAGE SYSTEM
HIGH VOLTAGE POWER SYSTEM
TILT PROPELLER SUBSYSTEM
730
736
728
734
732

FIG. 7

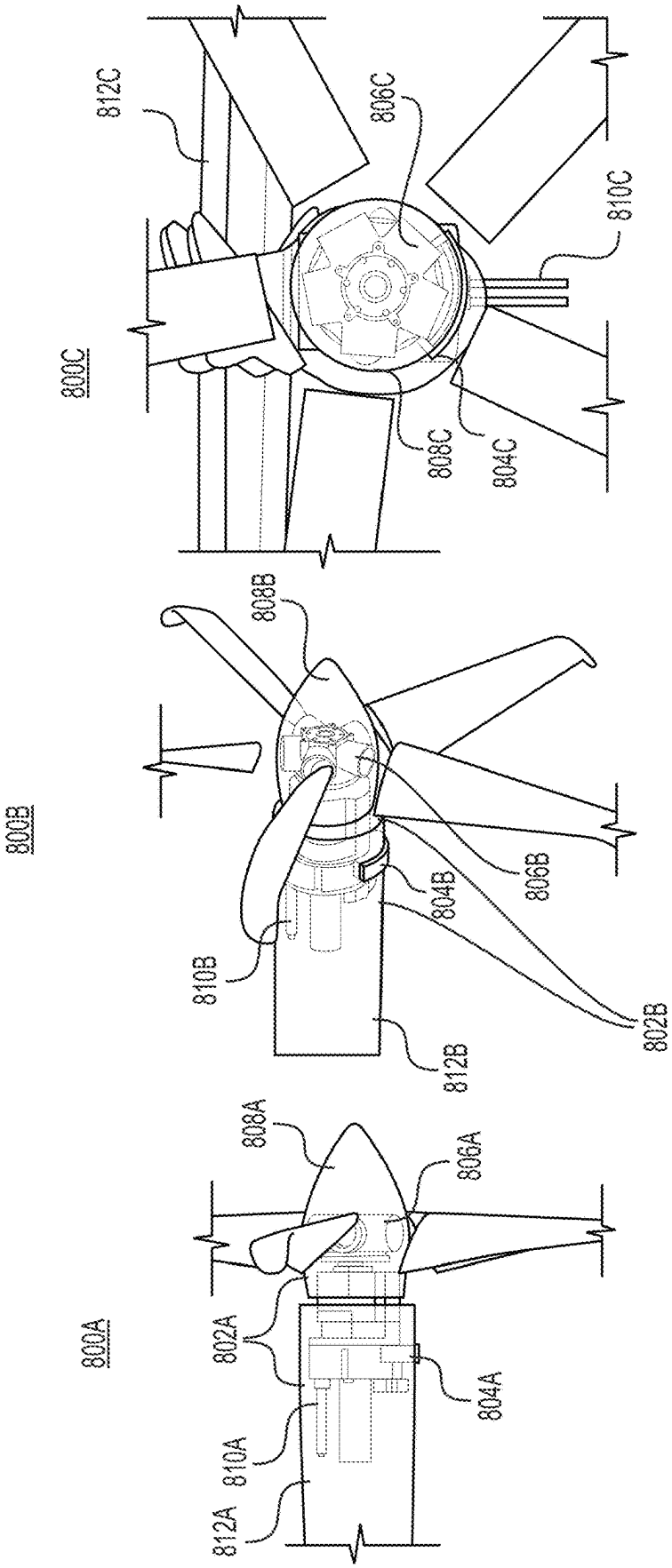

FIG. 8C

FIG. 8B

FIG. 8A

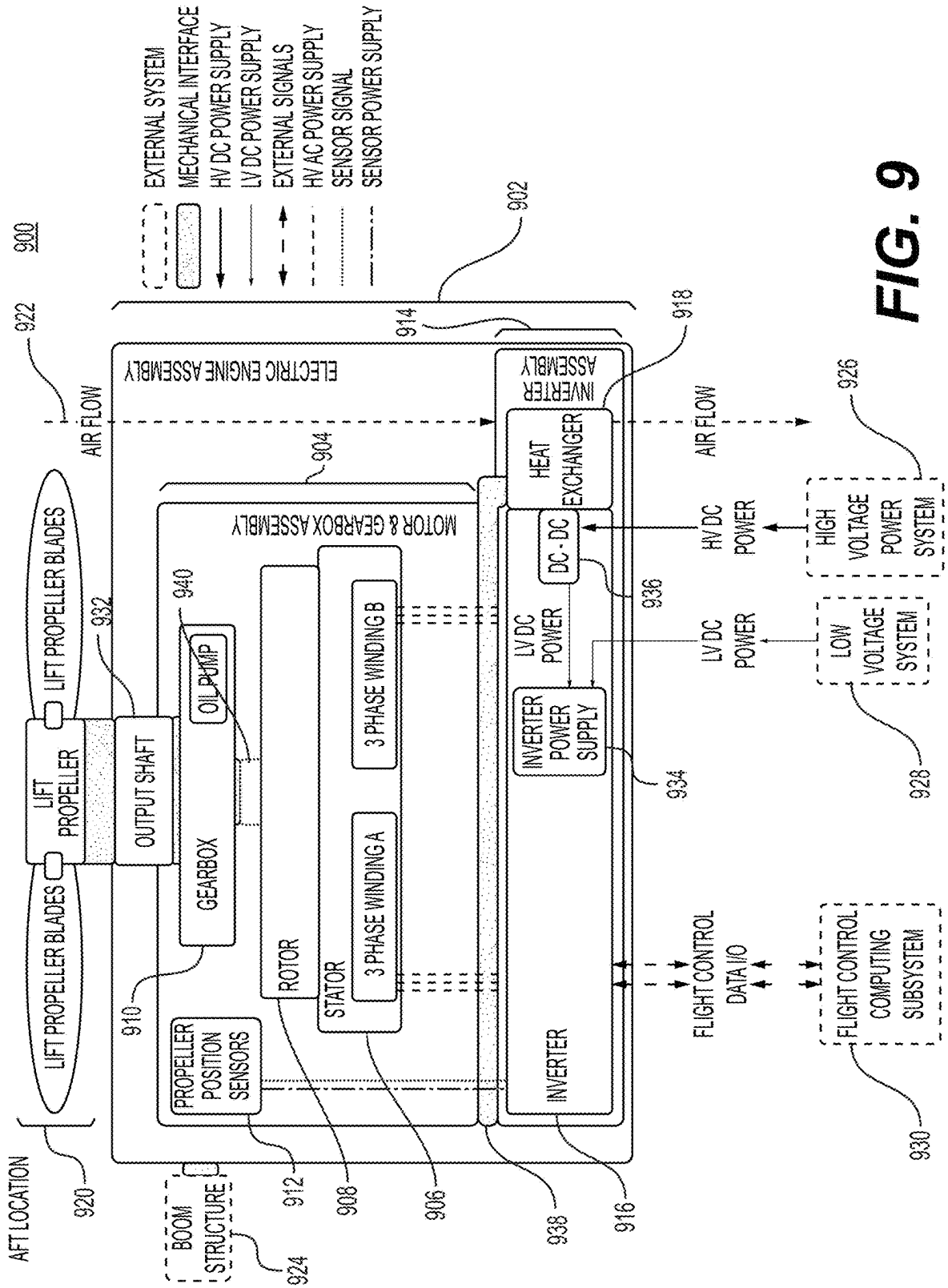
900
EXTERNAL SYSTEM
MECHANICAL INTERFACE
HV DC POWER SUPPLY
LV DC POWER SUPPLY
EXTERNAL SIGNALS
HV AC POWER SUPPLY
SENSOR SIGNAL
SENSOR POWER SUPPLY
902
914
918
922
AIR FLOW
ELECTRIC ENGINE ASSEMBLY
INVERTER ASSEMBLY
HEAT EXCHANGER
AIR FLOW
926
904
MOTOR & GEARBOX ASSEMBLY
DC - DC
HV DC POWER
HIGH VOLTAGE POWER SYSTEM
LIFT PROPELLER BLADES
940
936
932
OIL PUMP
LV DC POWER
LV DC POWER
LOW VOLTAGE SYSTEM
LIFT PROPELLER
OUTPUT SHAFT
3 PHASE WINDING B
INVERTER POWER SUPPLY
934
928
GEARBOX
ROTOR
STATOR
3 PHASE WINDING A
LIFT PROPELLER BLADES
910
FLIGHT CONTROL DATA I/O
FLIGHT CONTROL COMPUTING SUBSYSTEM
PROPELLER POSITION SENSORS
INVERTER
AFT LOCATION
920
BOOM STRUCTURE
912
908
906
938
916
930
924

FIG. 9

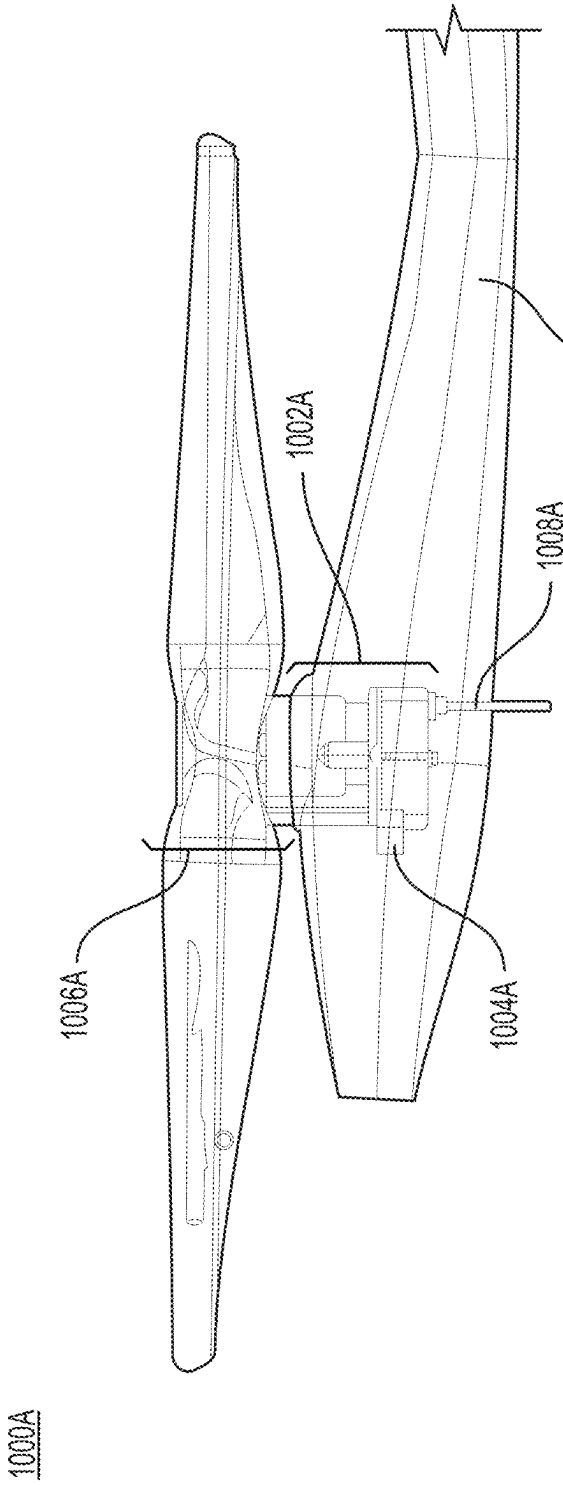

FIG. 10A

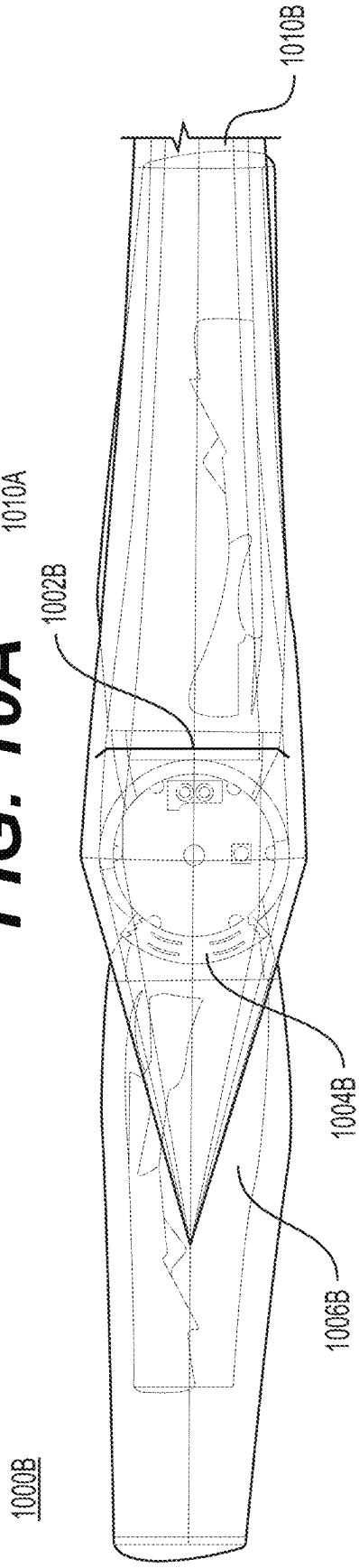

FIG. 10B

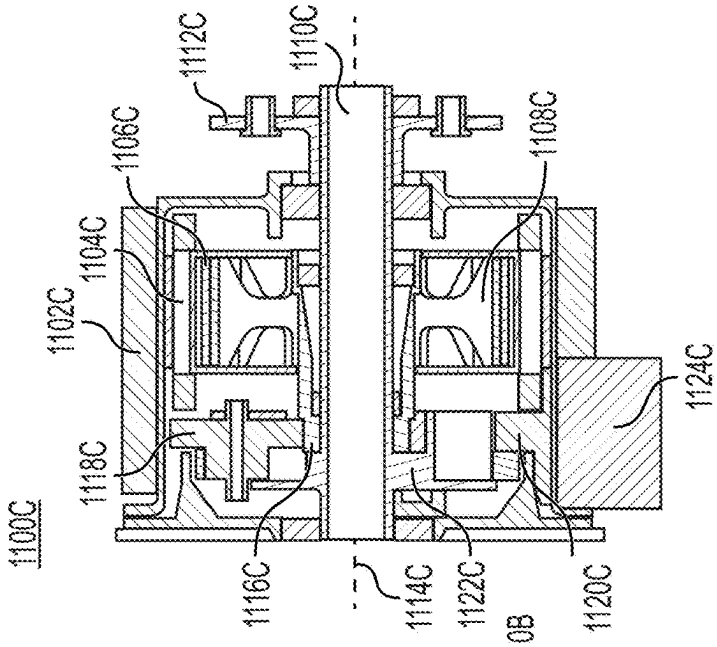

FIG. 11C

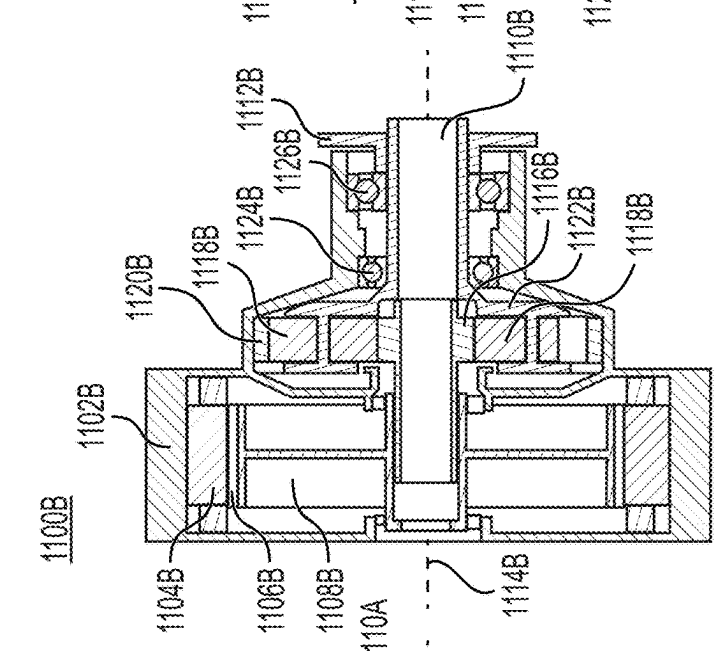

FIG. 11B

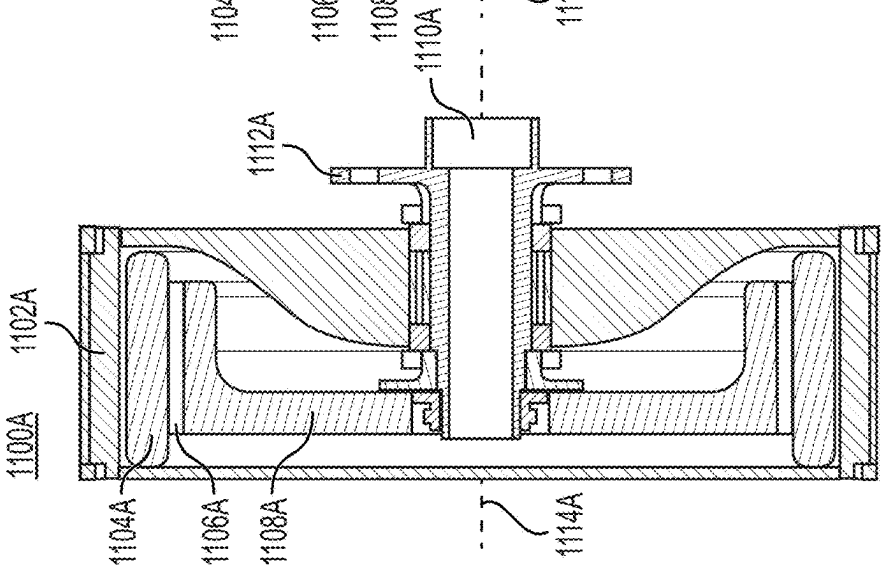

FIG. 11A

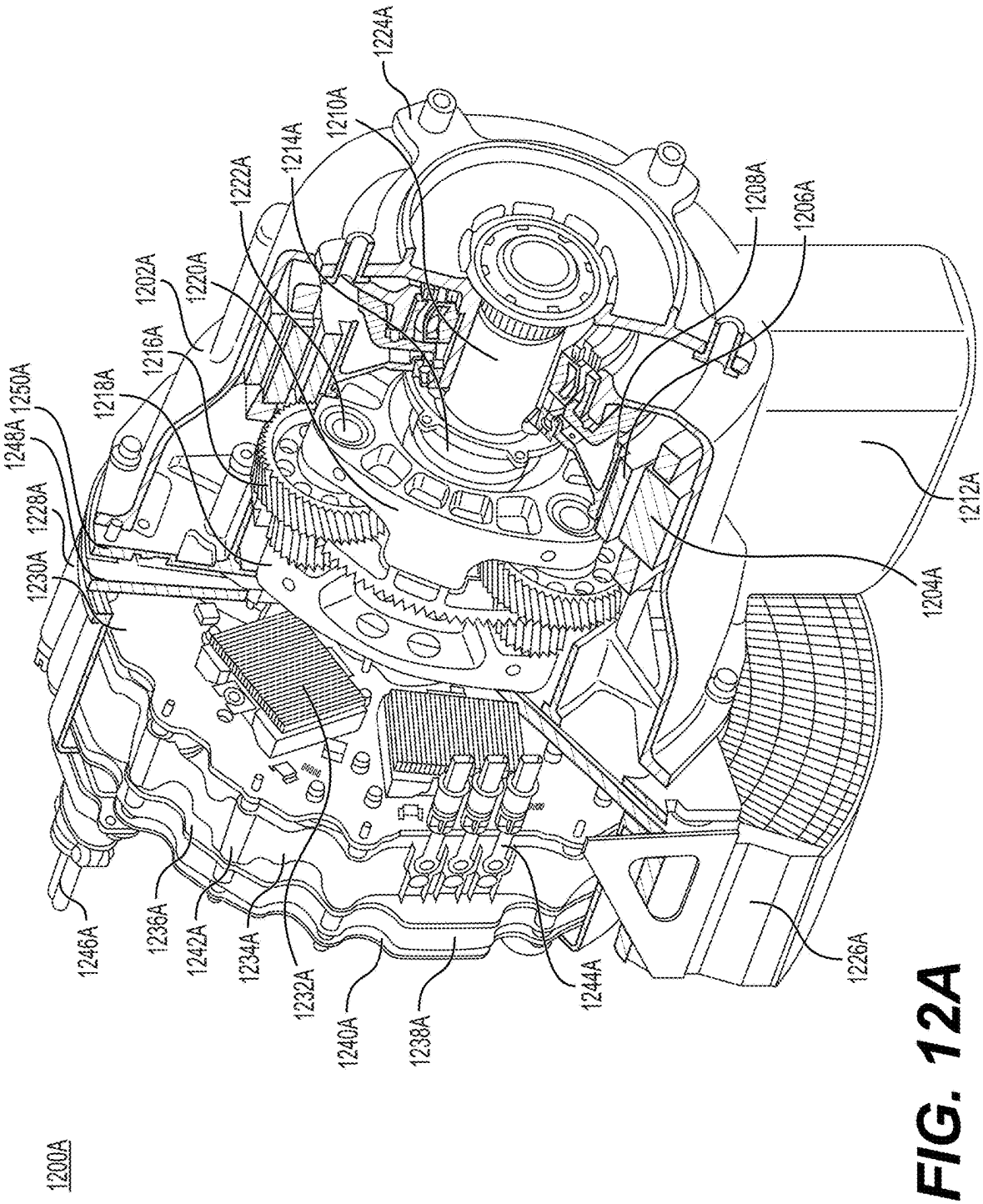
1200A
1246A
1236A
1242A
1234A
1232A
1240A
1238A
1244A
1226A
1230A
1228A
1248A
1250A
1218A
1216A
1202A
1220A
1222A
1214A
1210A
1224A
1208A
1206A
1212A
1204A

FIG. 12A

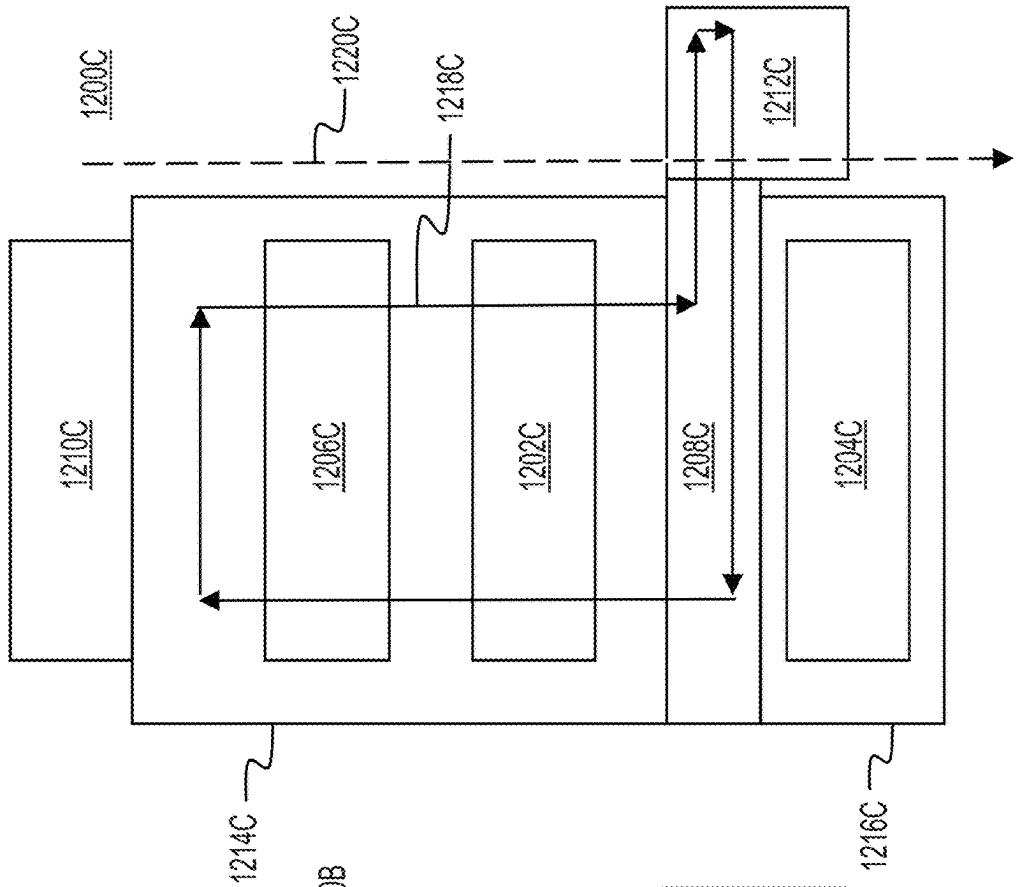

FIG. 12C

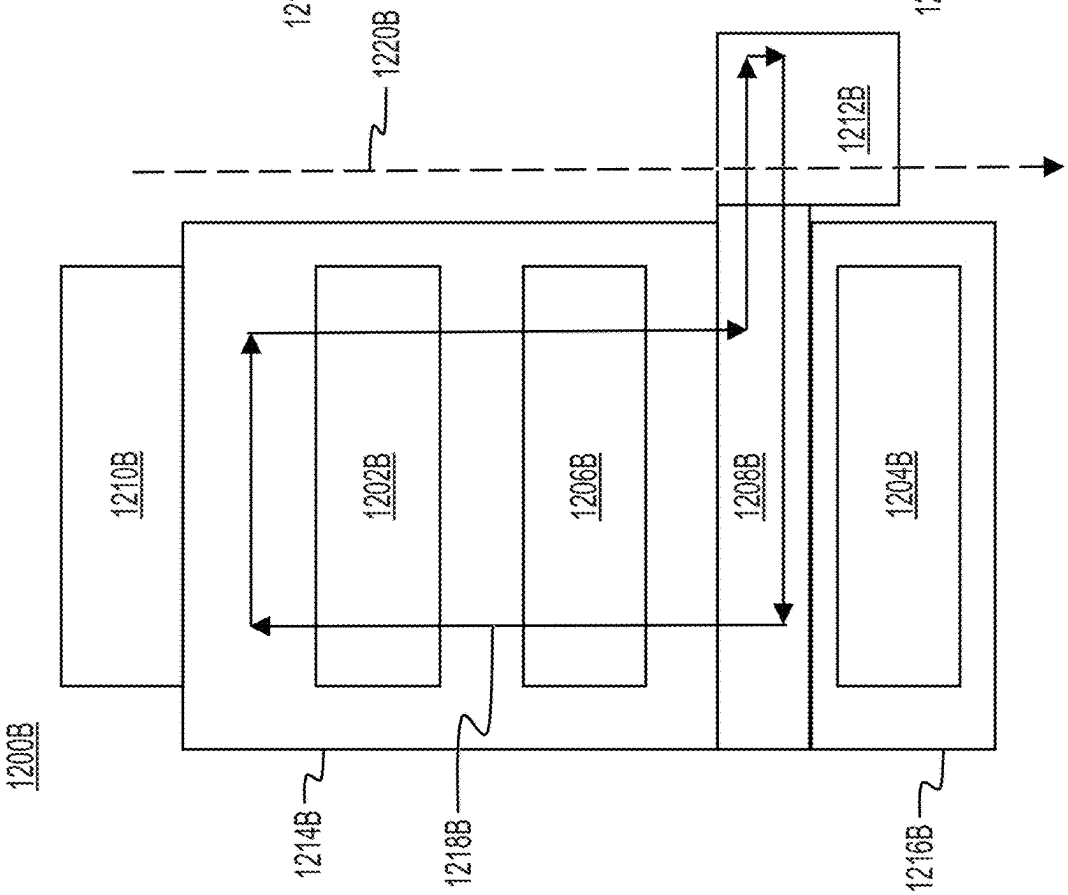

FIG. 12B

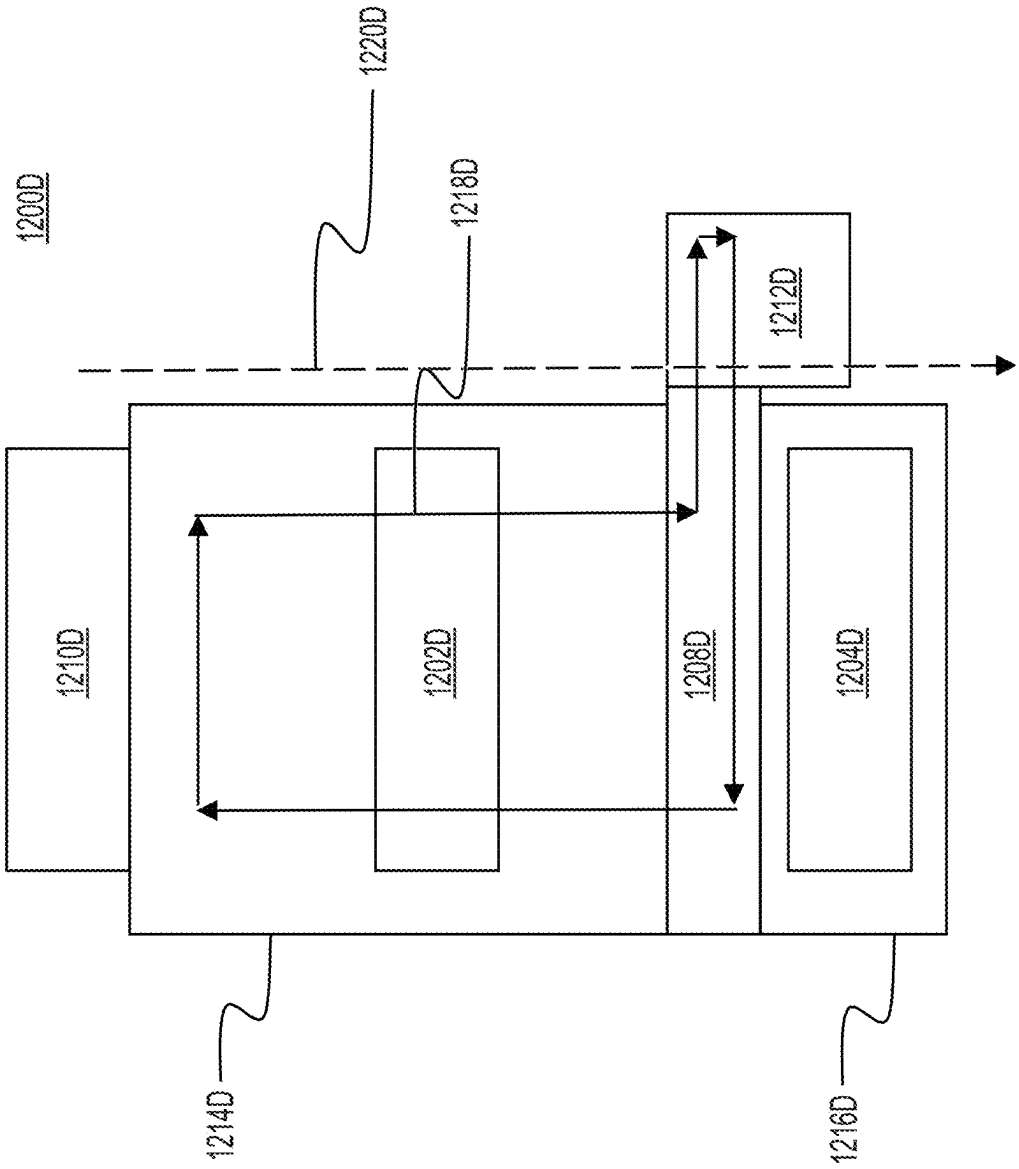
1200D
1210D
1214D
1220D
1202D
1218D
1208D
1212D
1204D
1216D

FIG. 12D

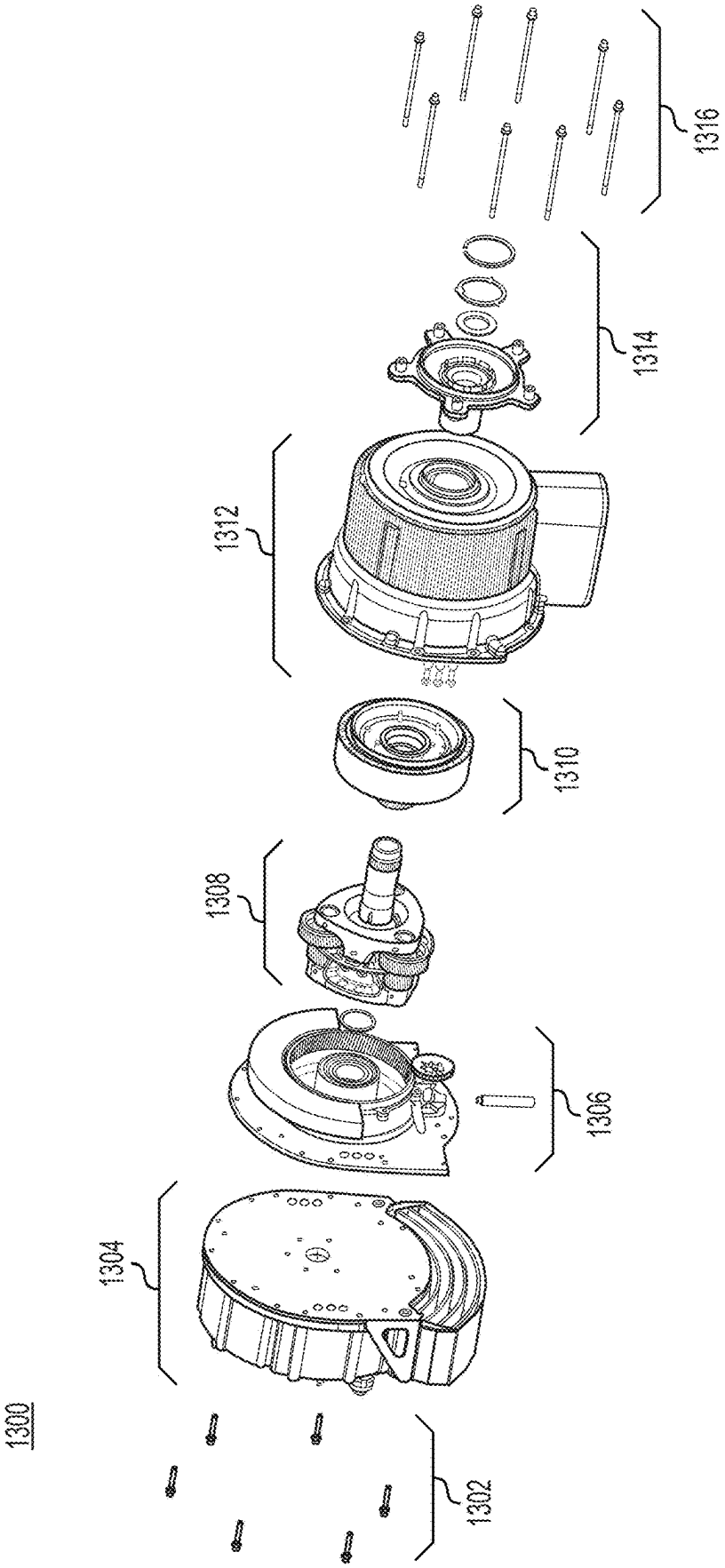

FIG. 13

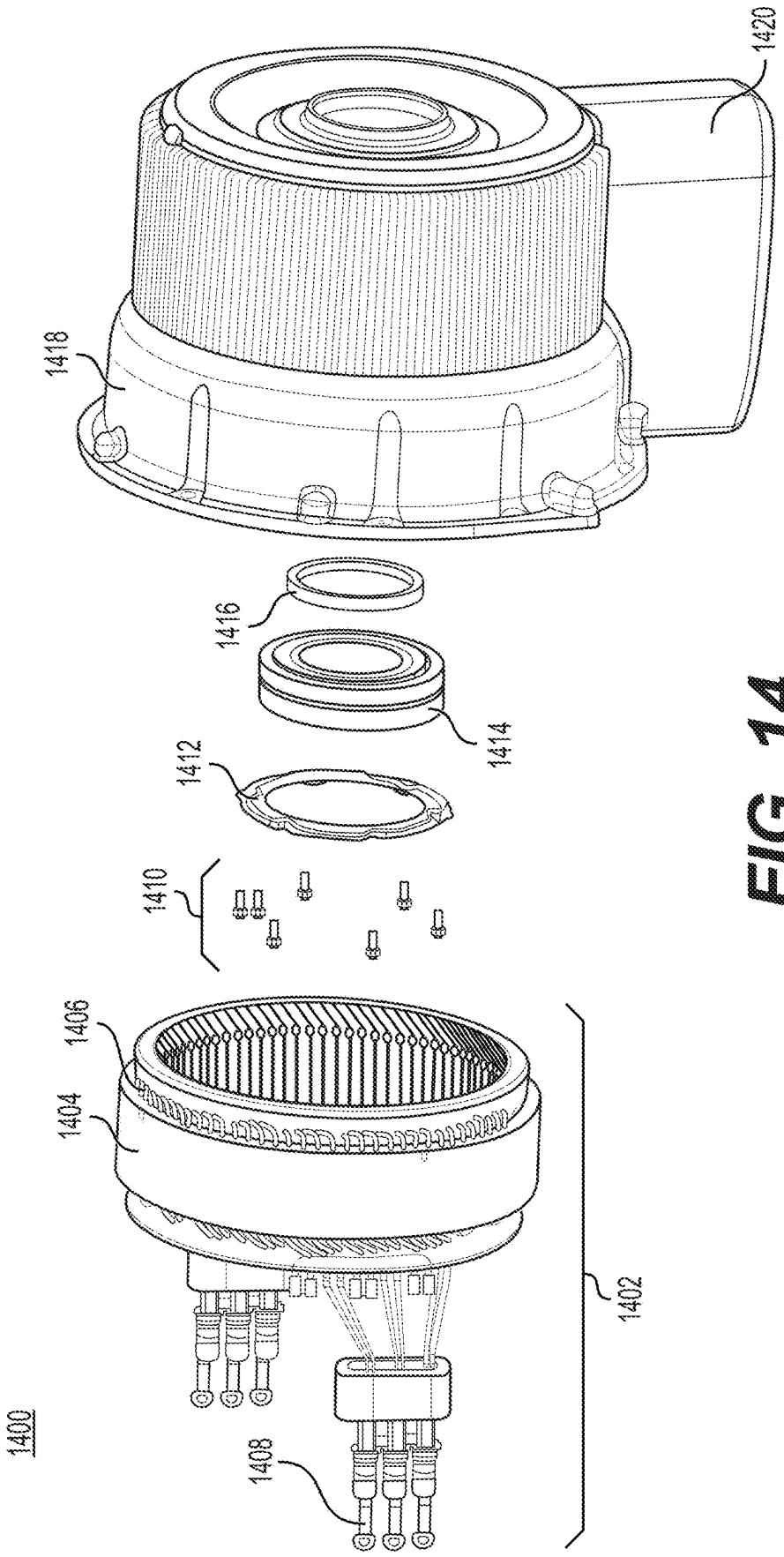

FIG. 14

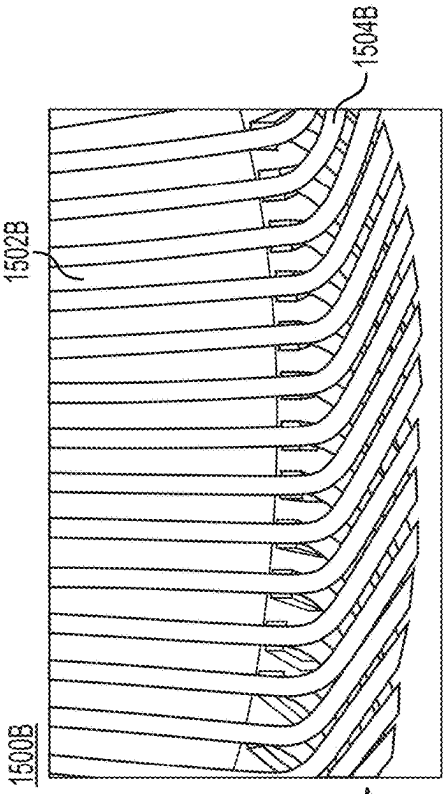

FIG. 15B

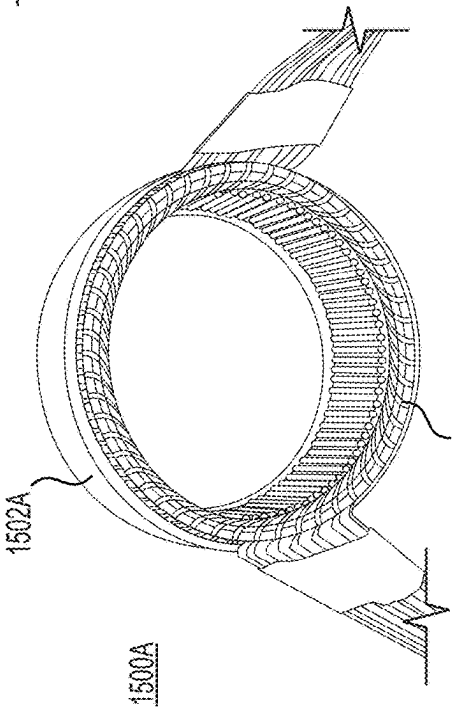

FIG. 15A

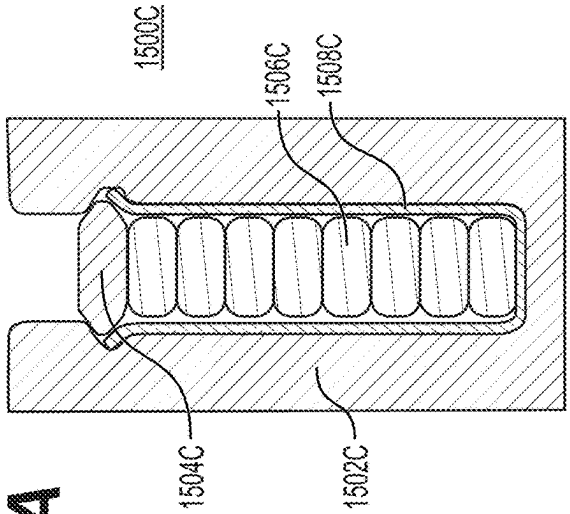

FIG. 15C

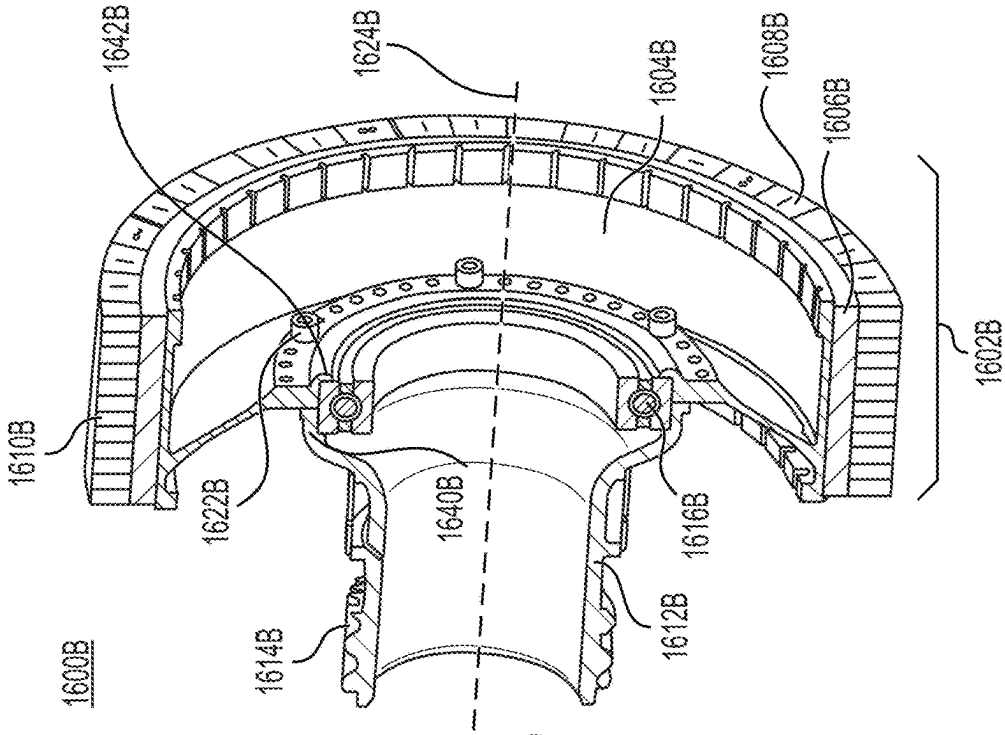

FIG. 16B

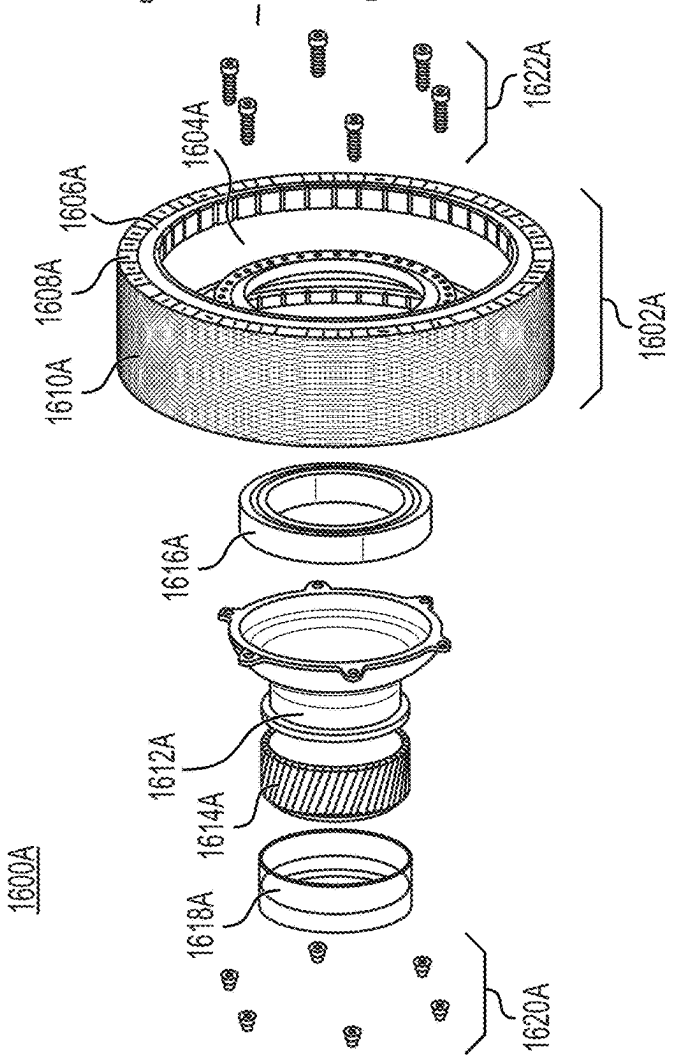

FIG. 16A

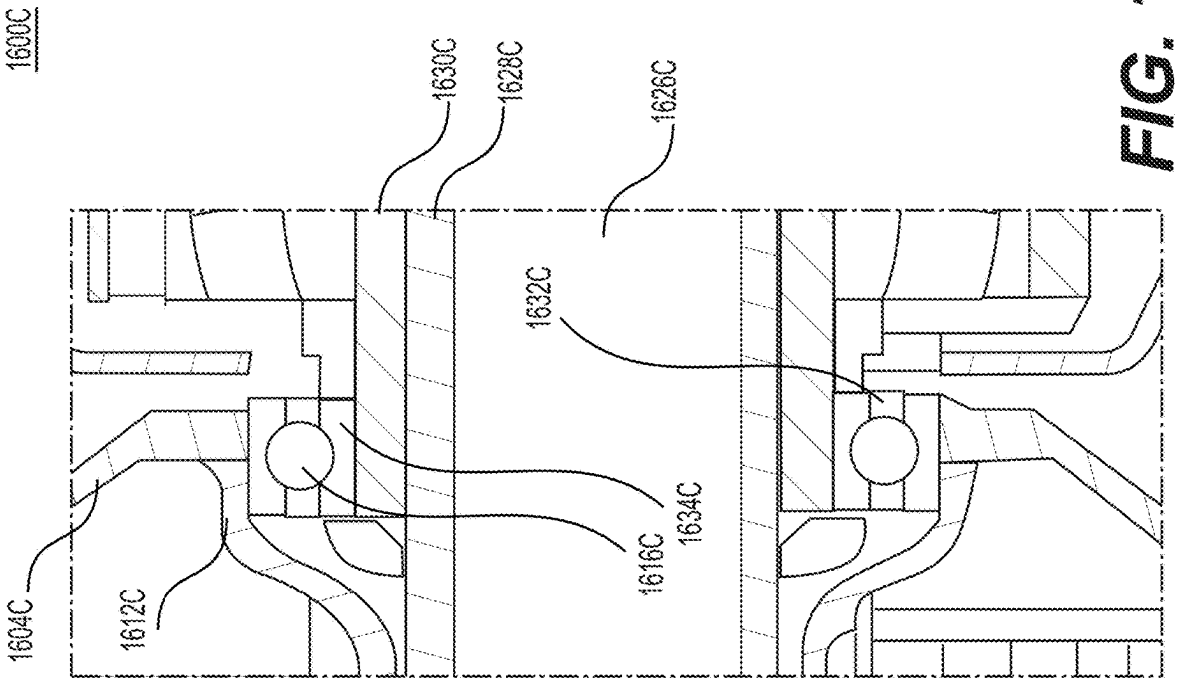

FIG. 16C

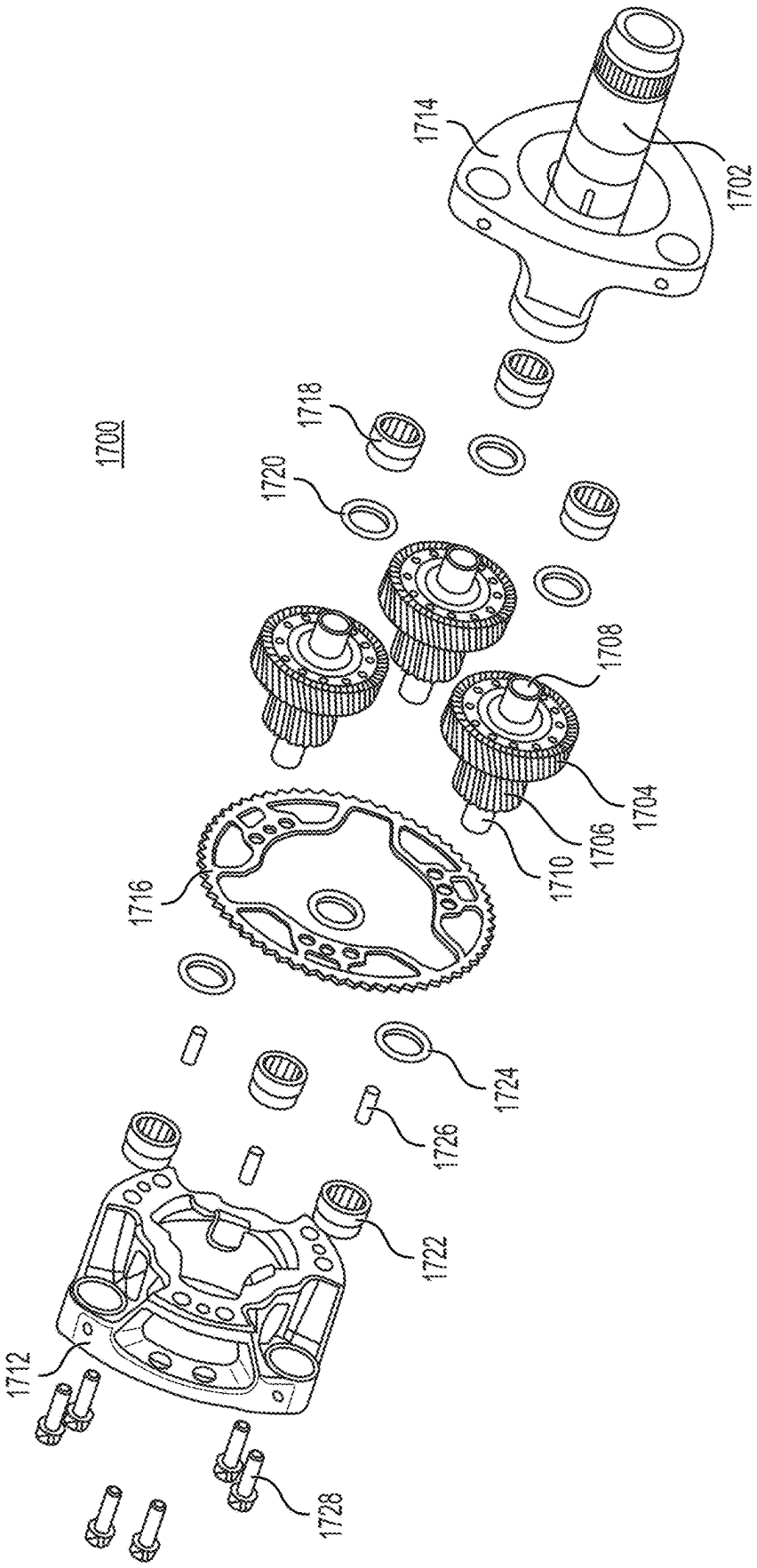
1700
1702
1704
1706
1708
1710
1712
1714
1716
1718
1720
1722
1724
1726
1728

FIG. 17

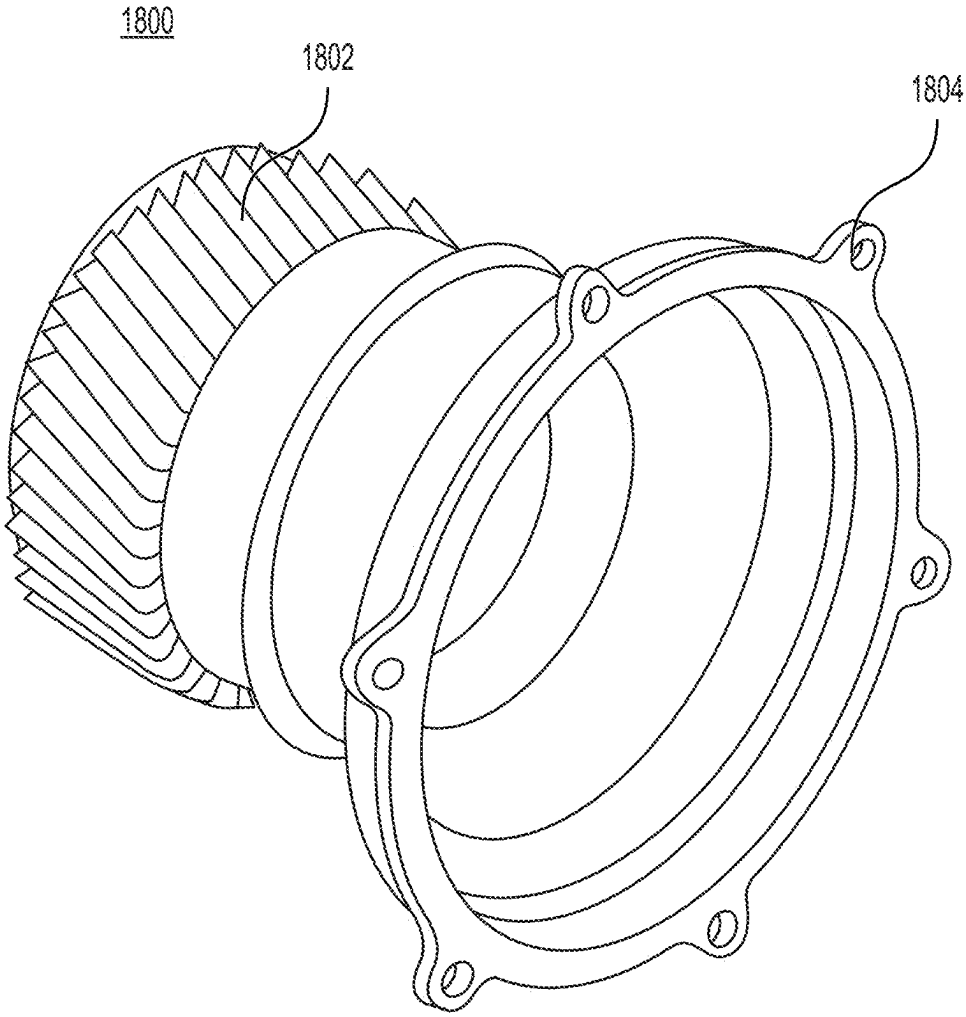

FIG. 18

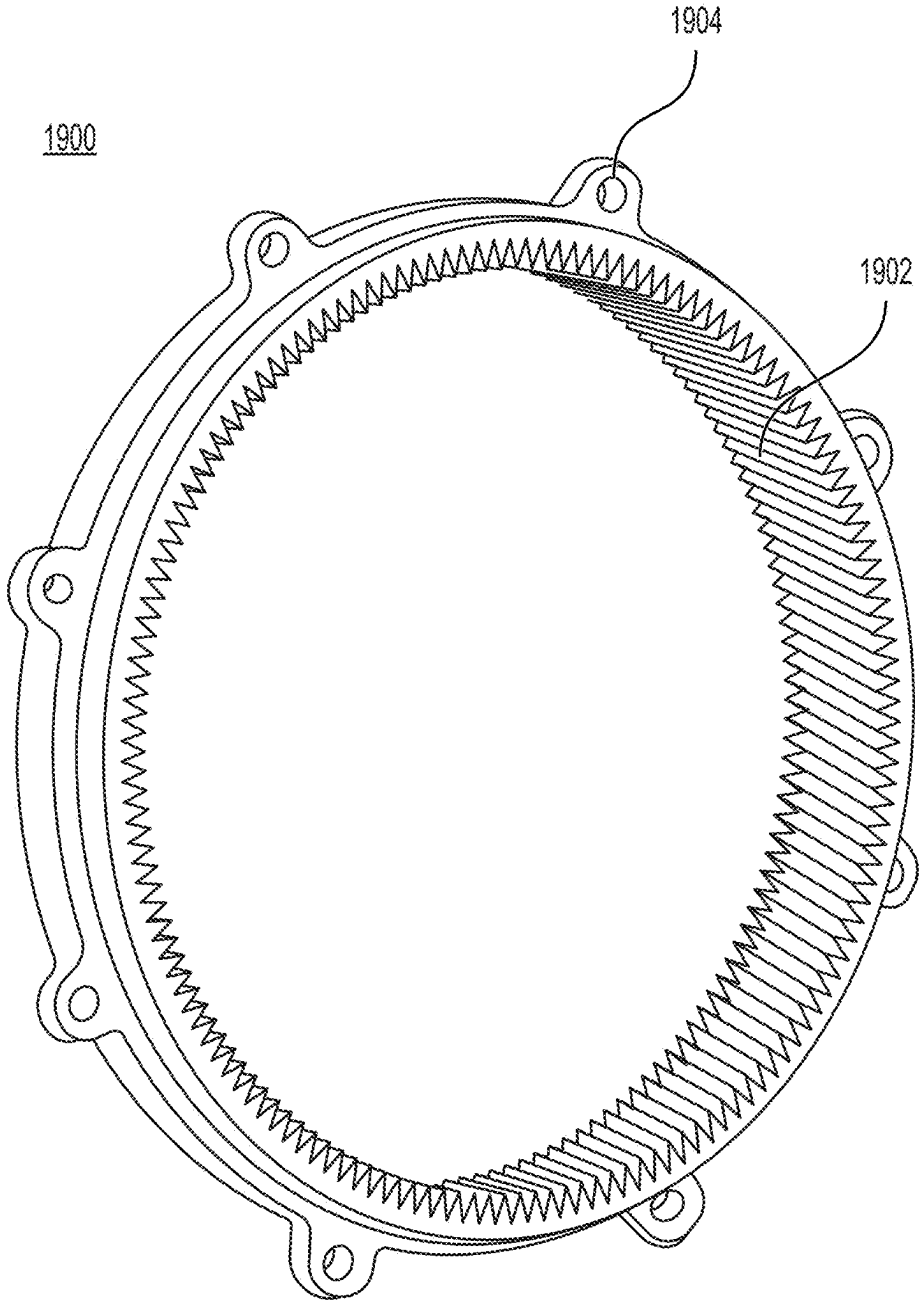

FIG. 19

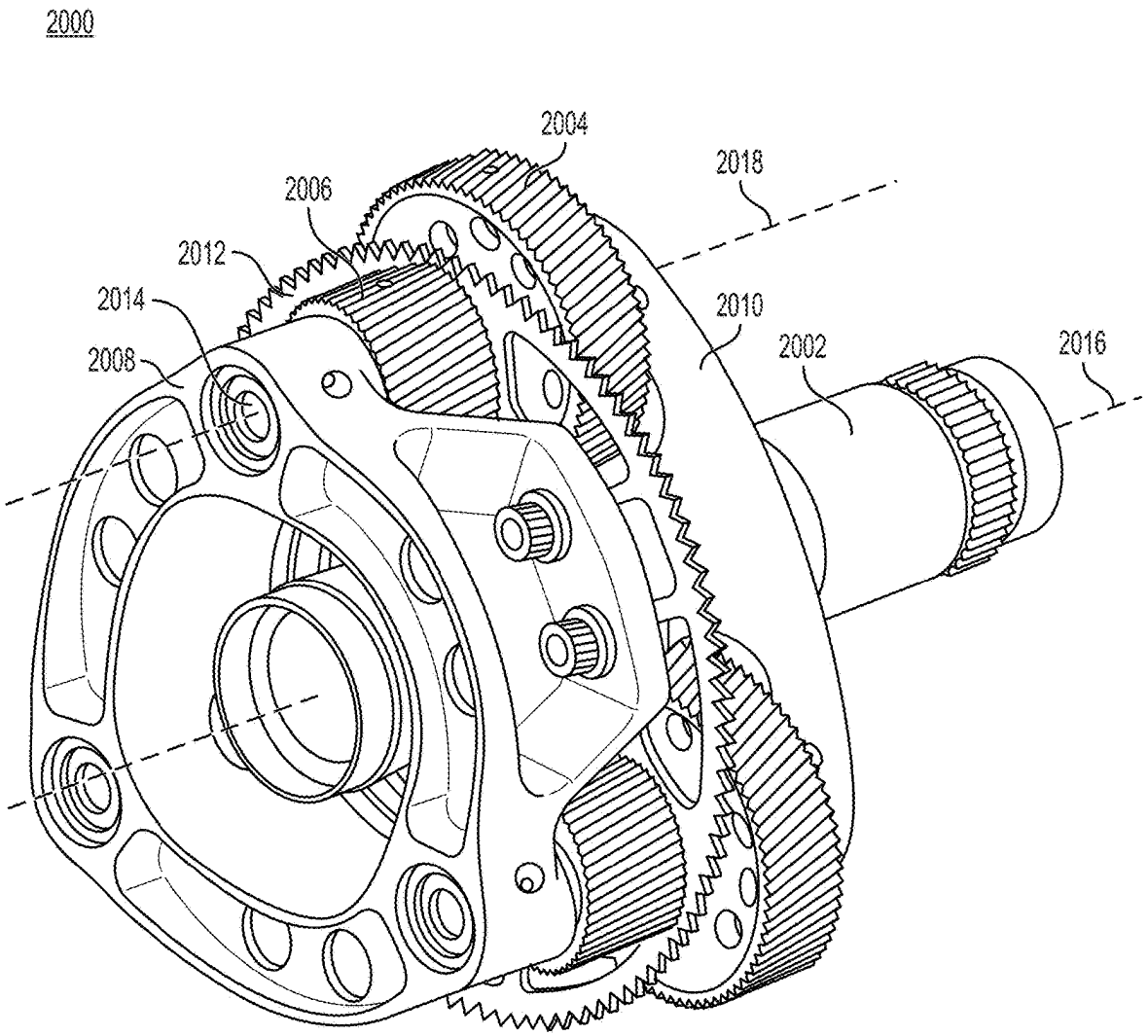

FIG. 20

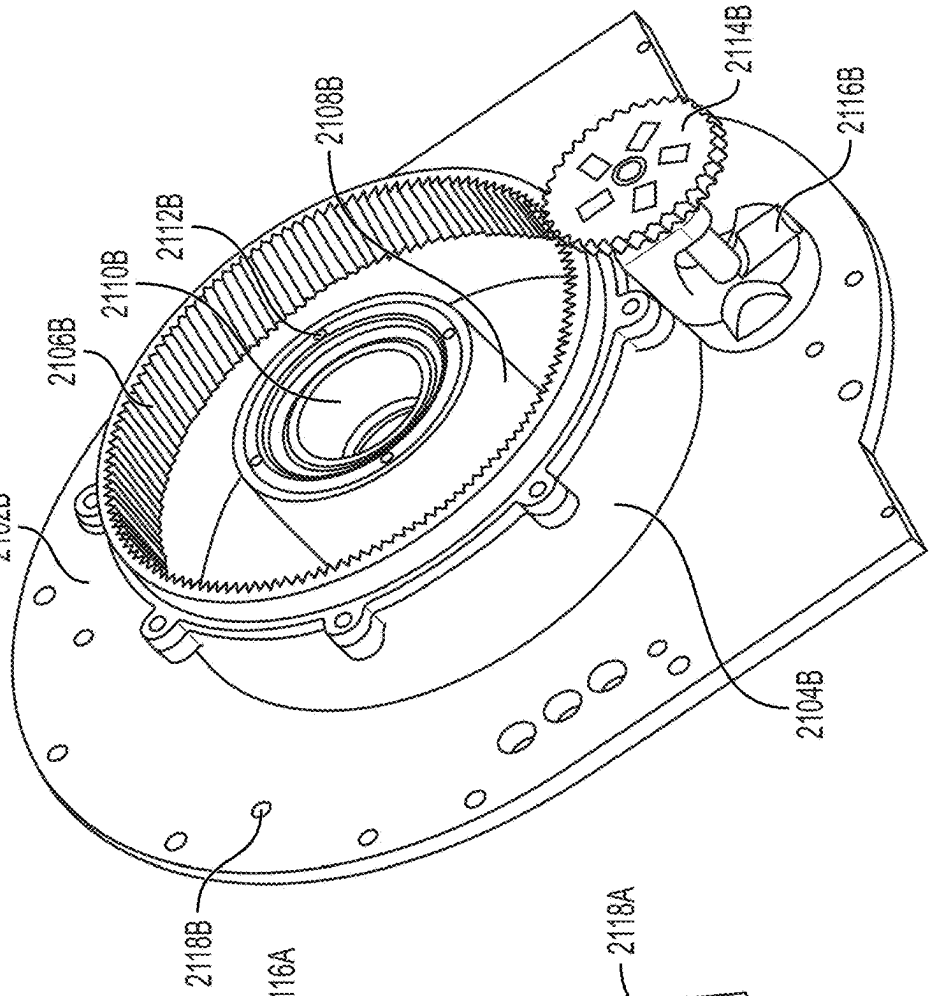

FIG. 21B

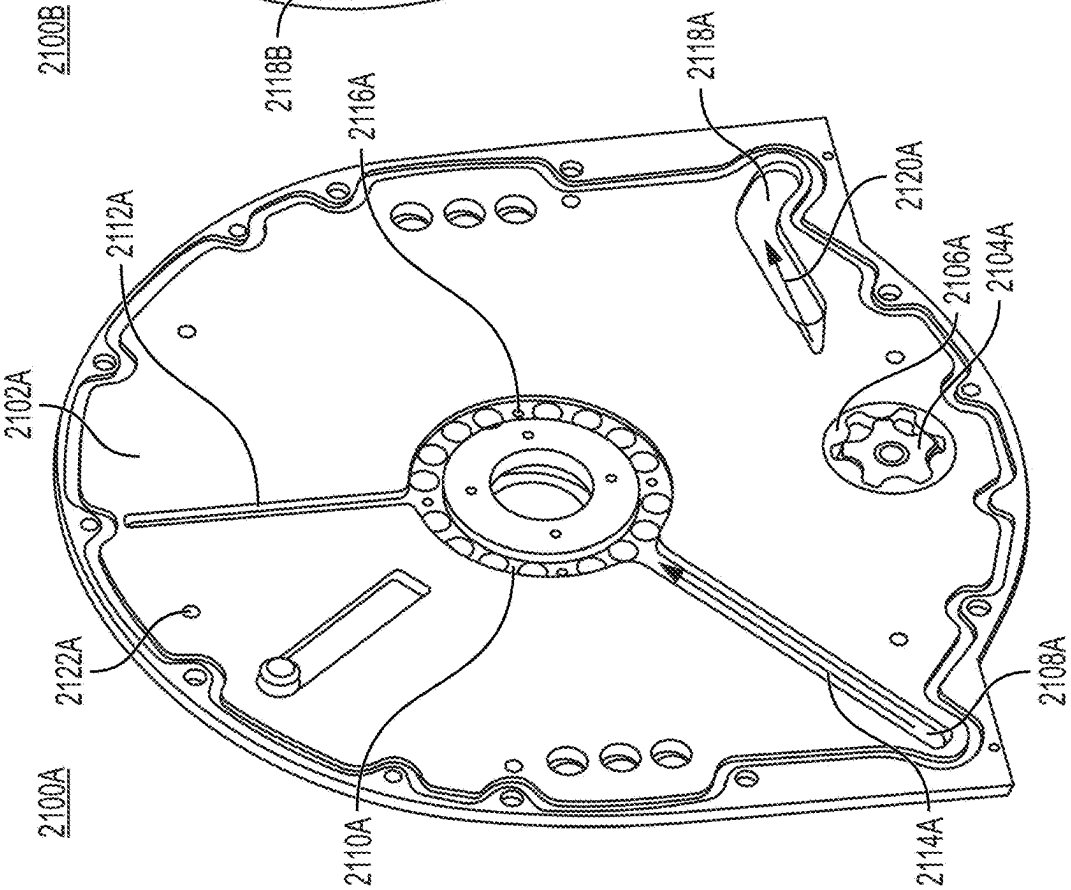

FIG. 21A

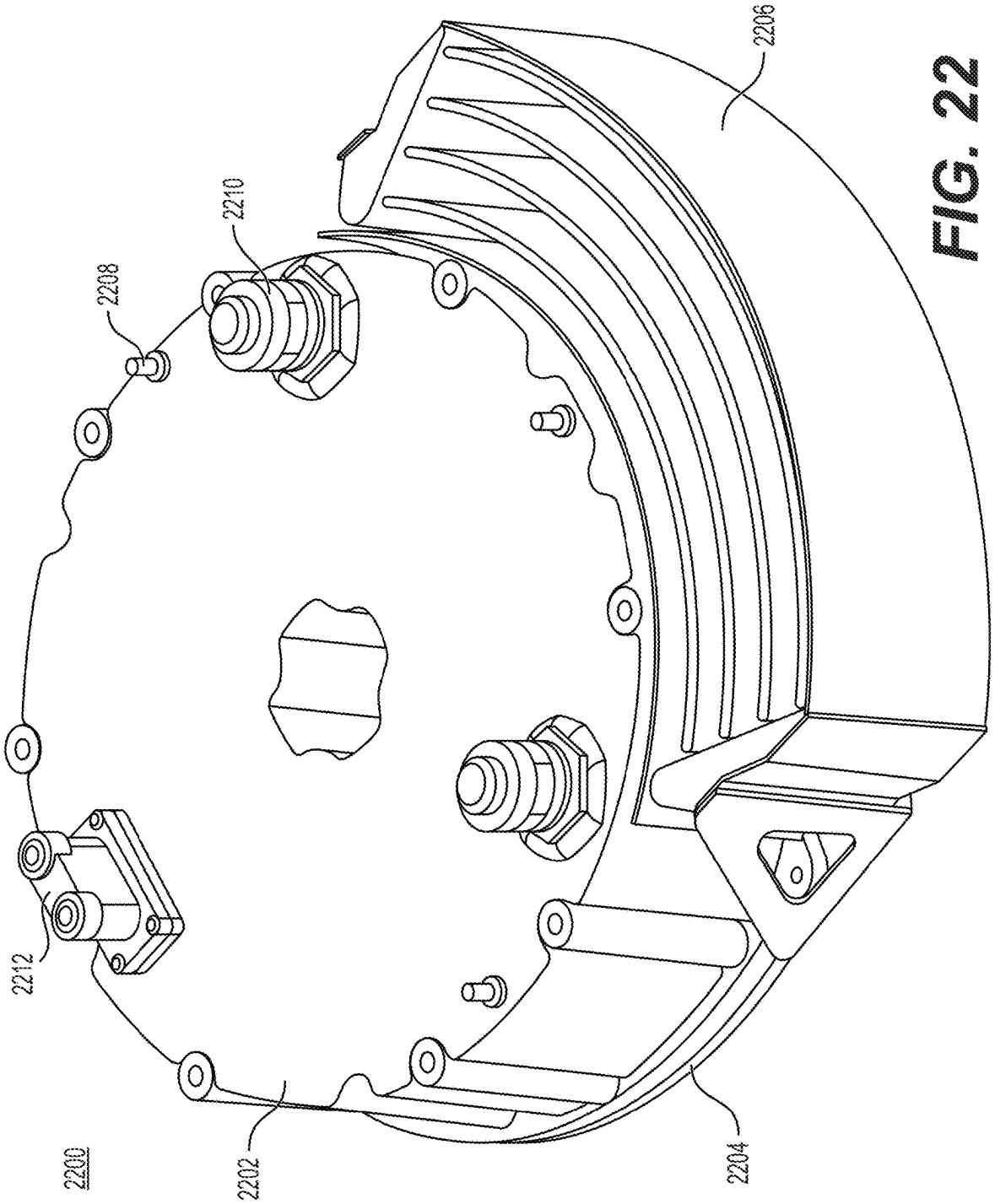

FIG. 22

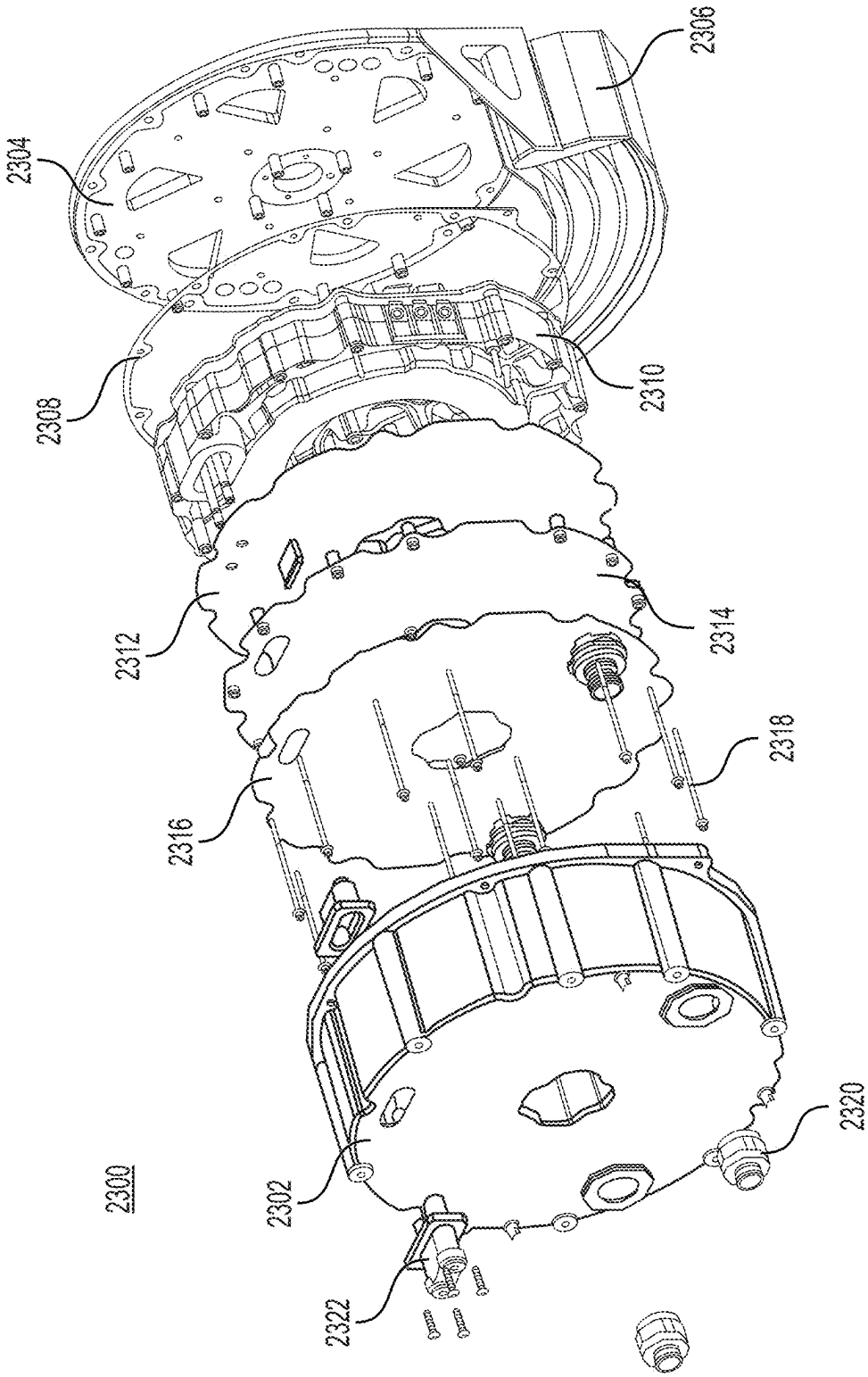

FIG. 23

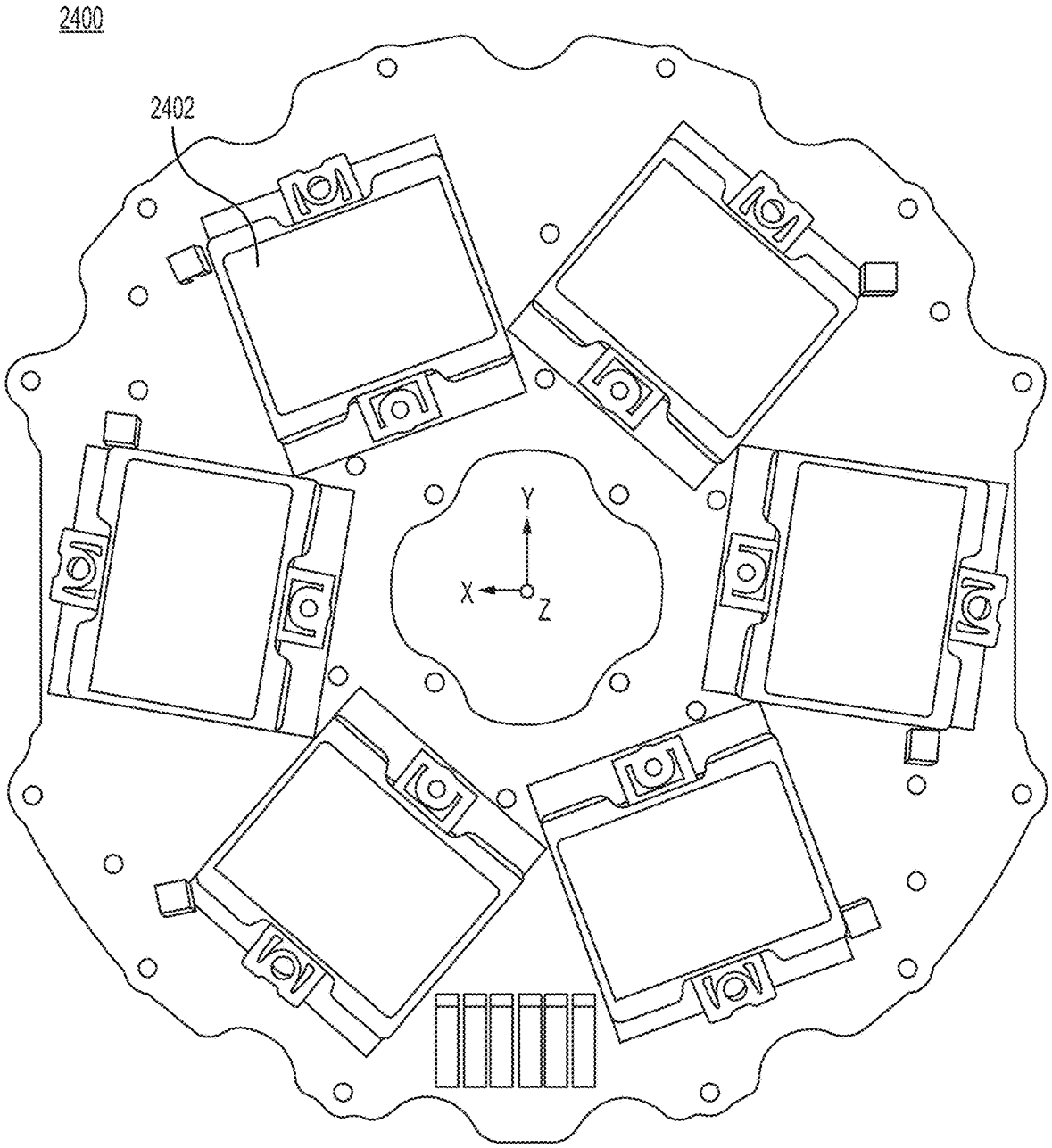

FIG. 24

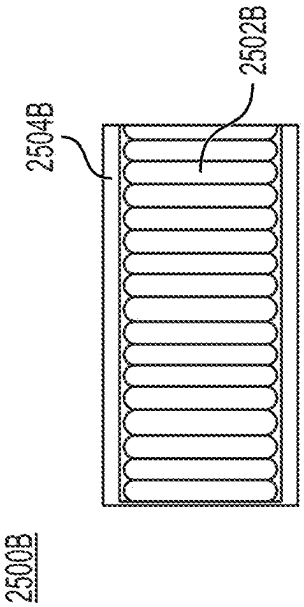

FIG. 25B

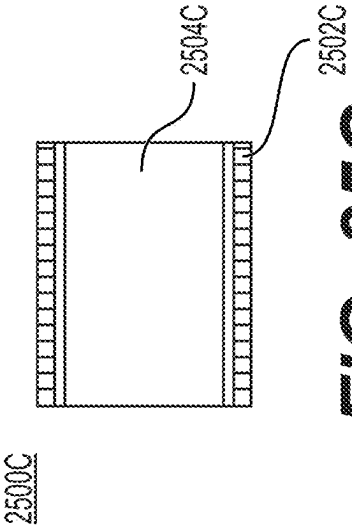

FIG. 25C

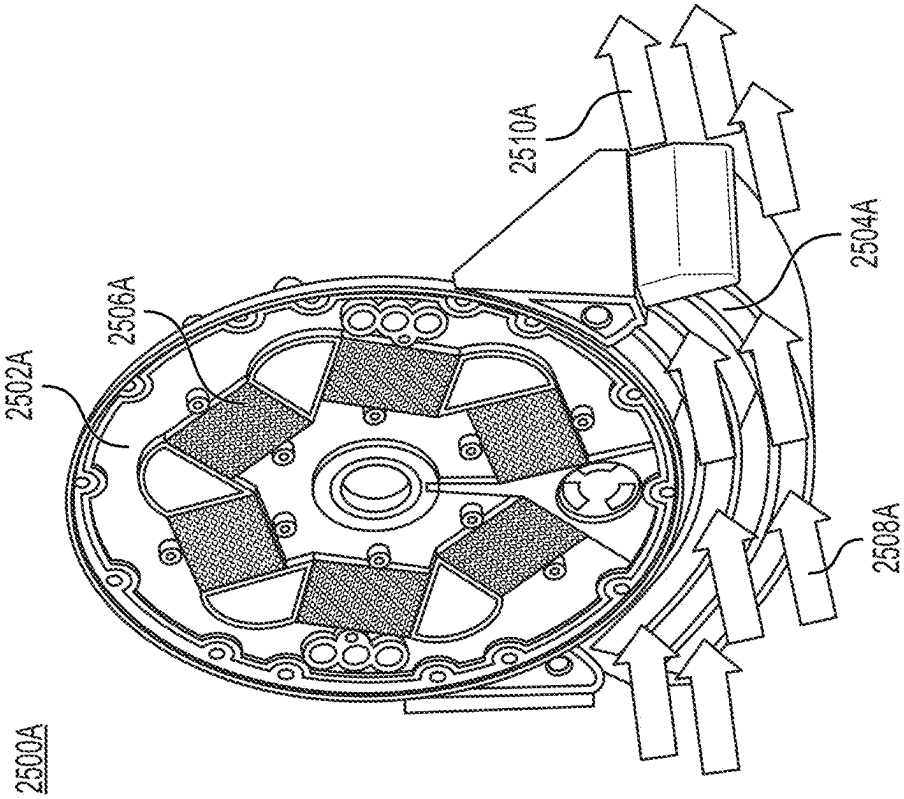

FIG. 25A

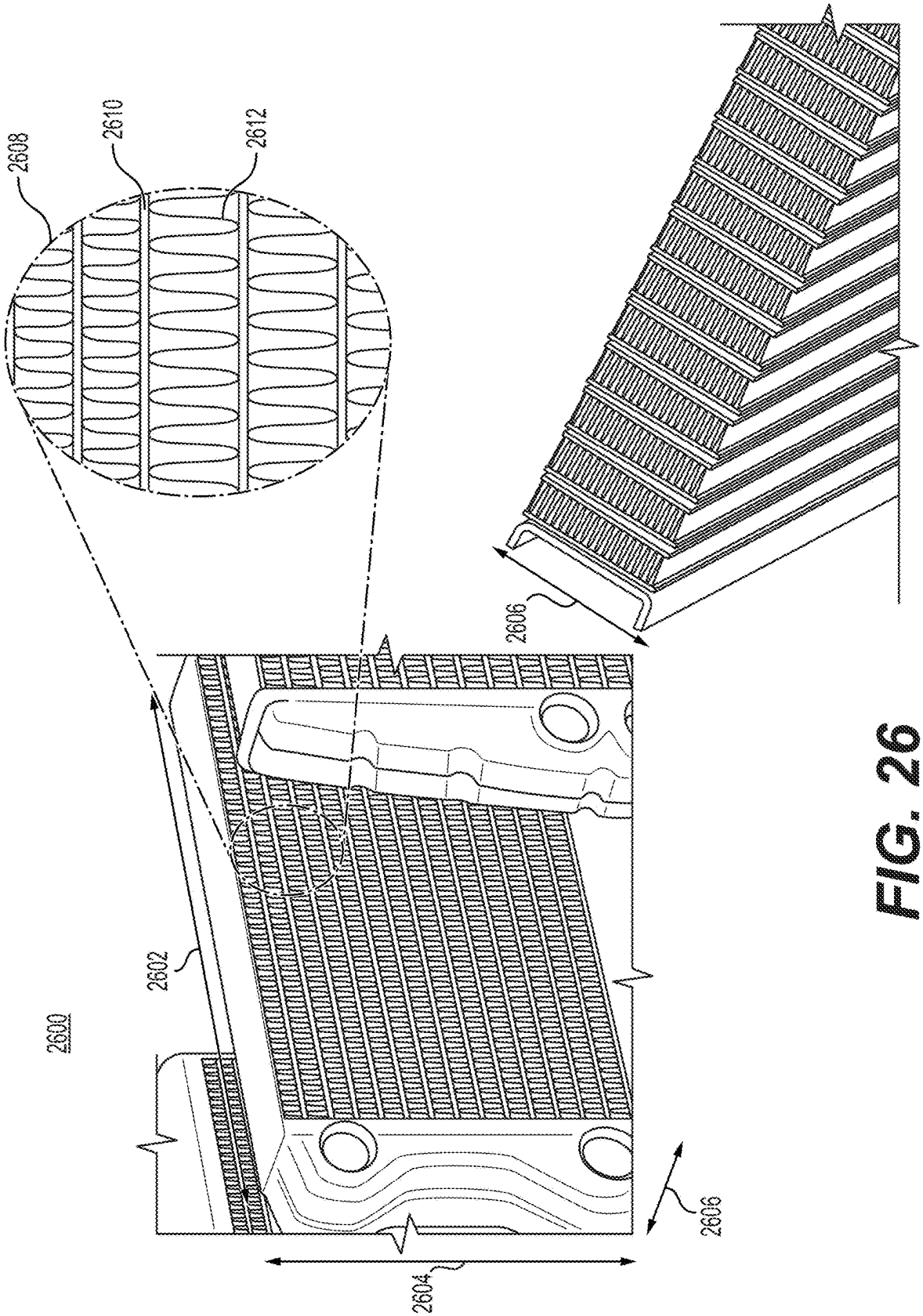

FIG. 26

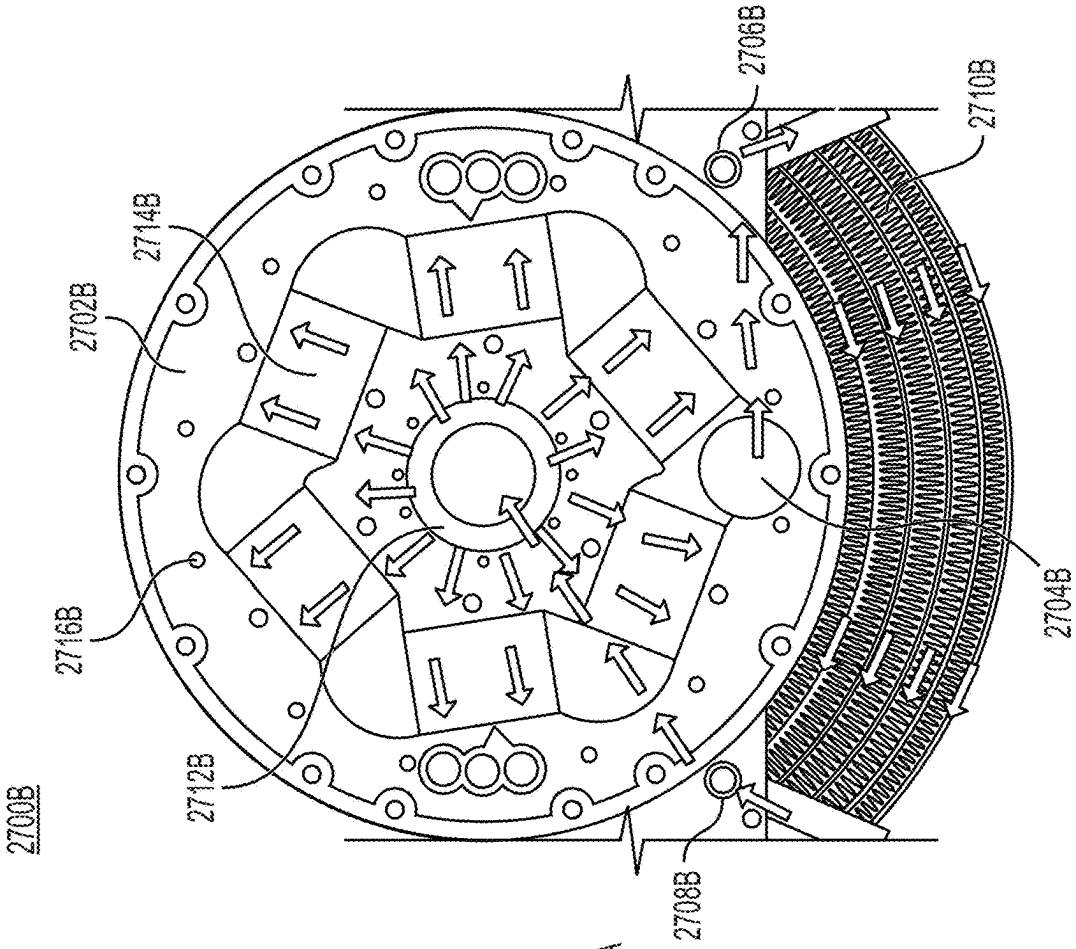

FIG. 27B

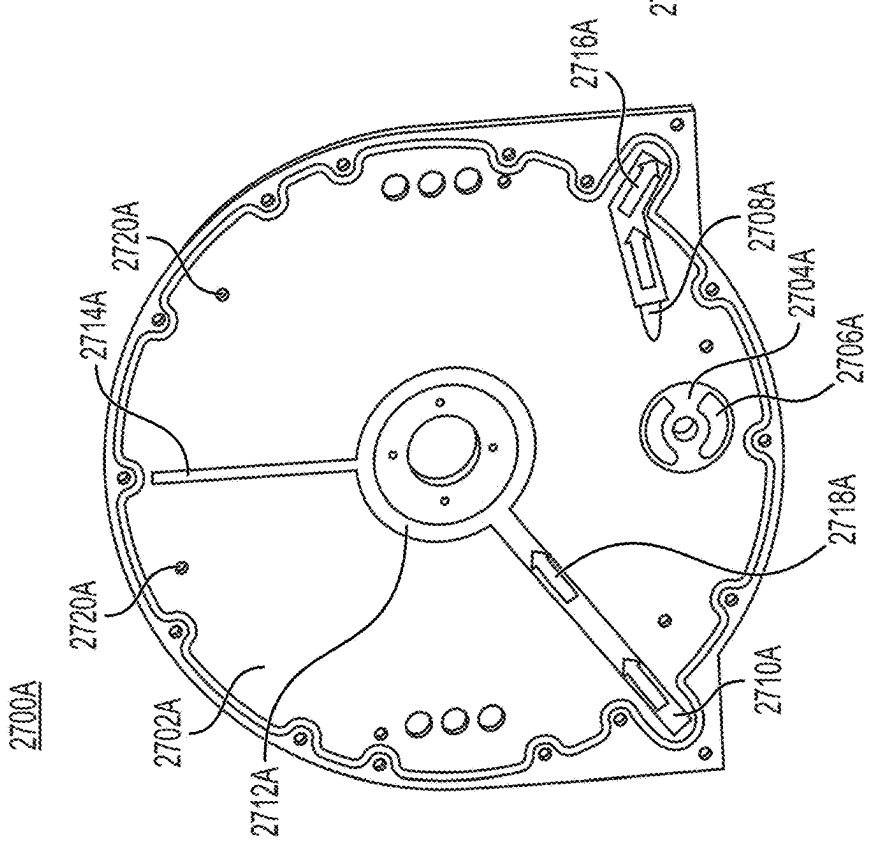

FIG. 27A

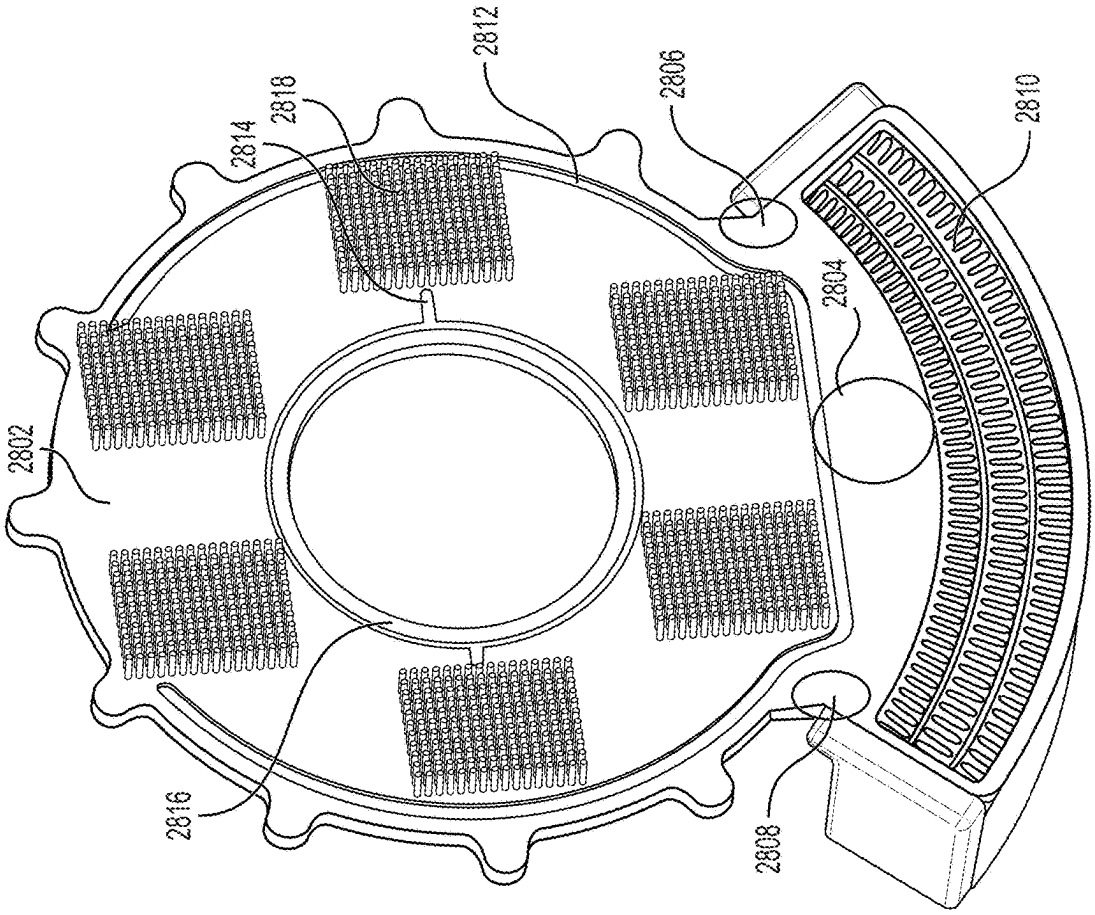

FIG. 28

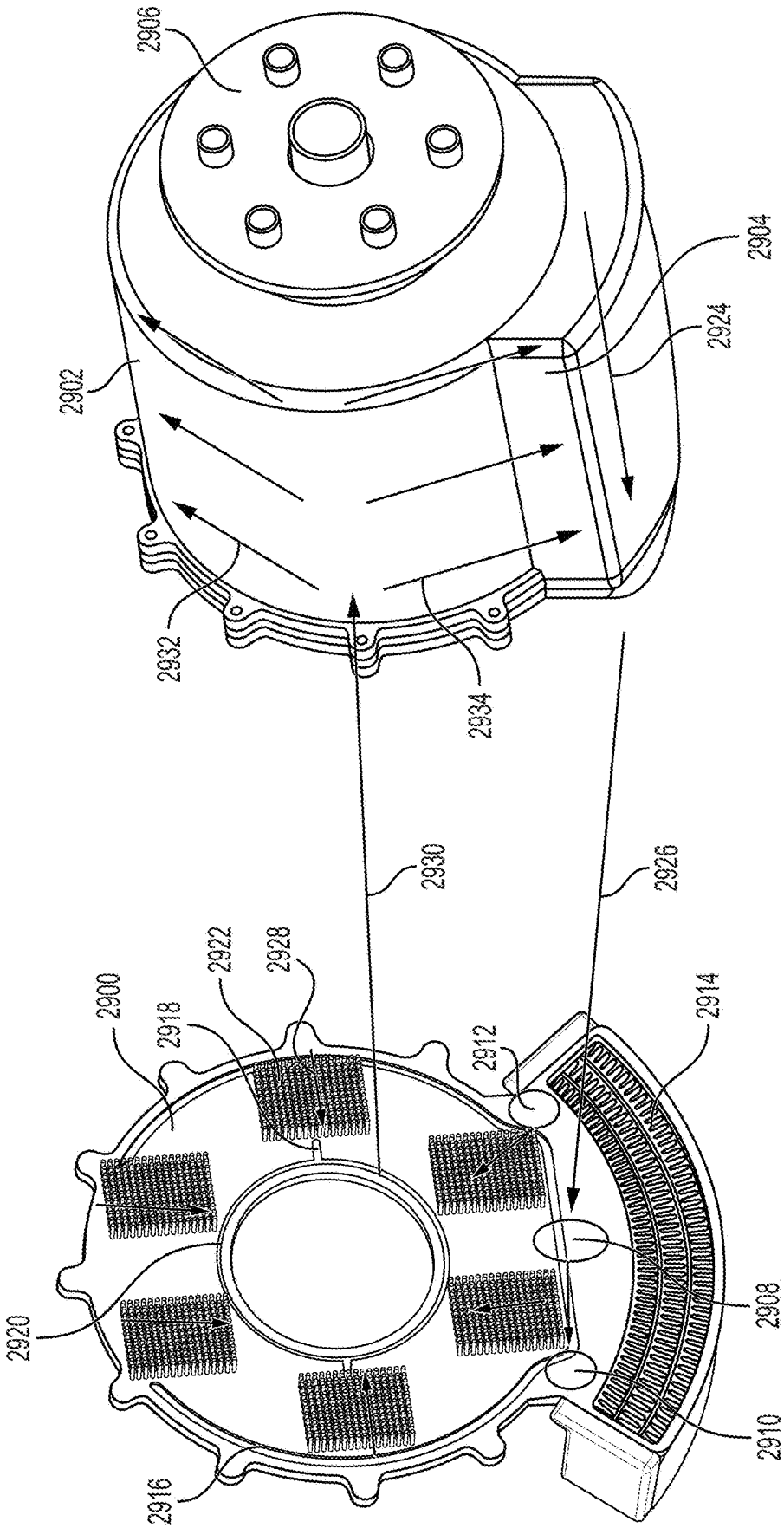
2906
2904
2924
2902
2932
2934
2930
2926
2922
2928
2900
2918
2912
2914
2920
2908
2910
2916

FIG. 29

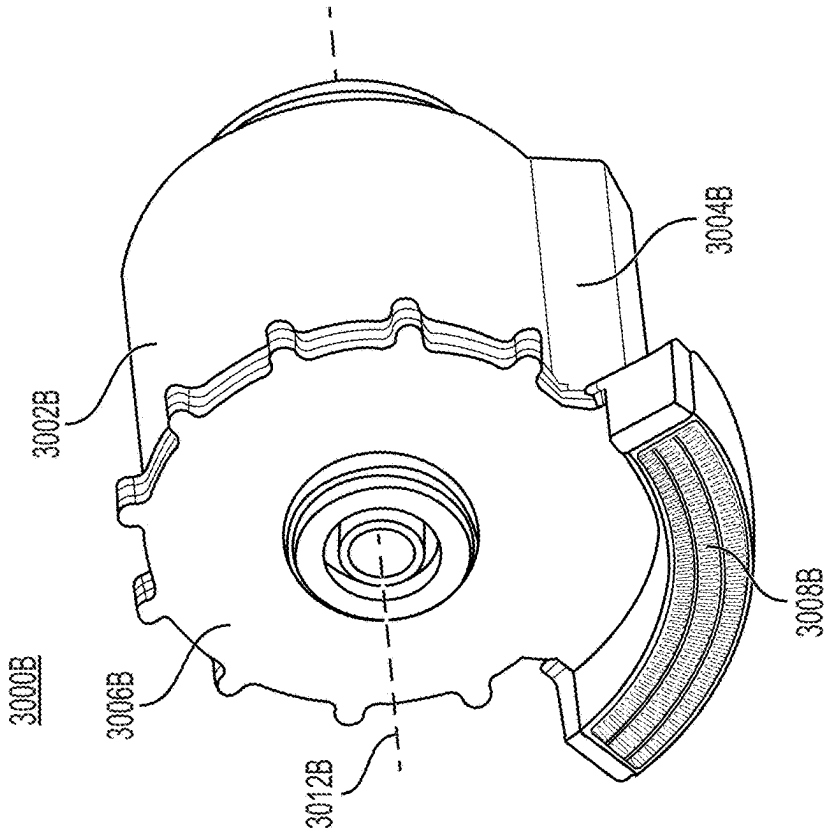

FIG. 30B

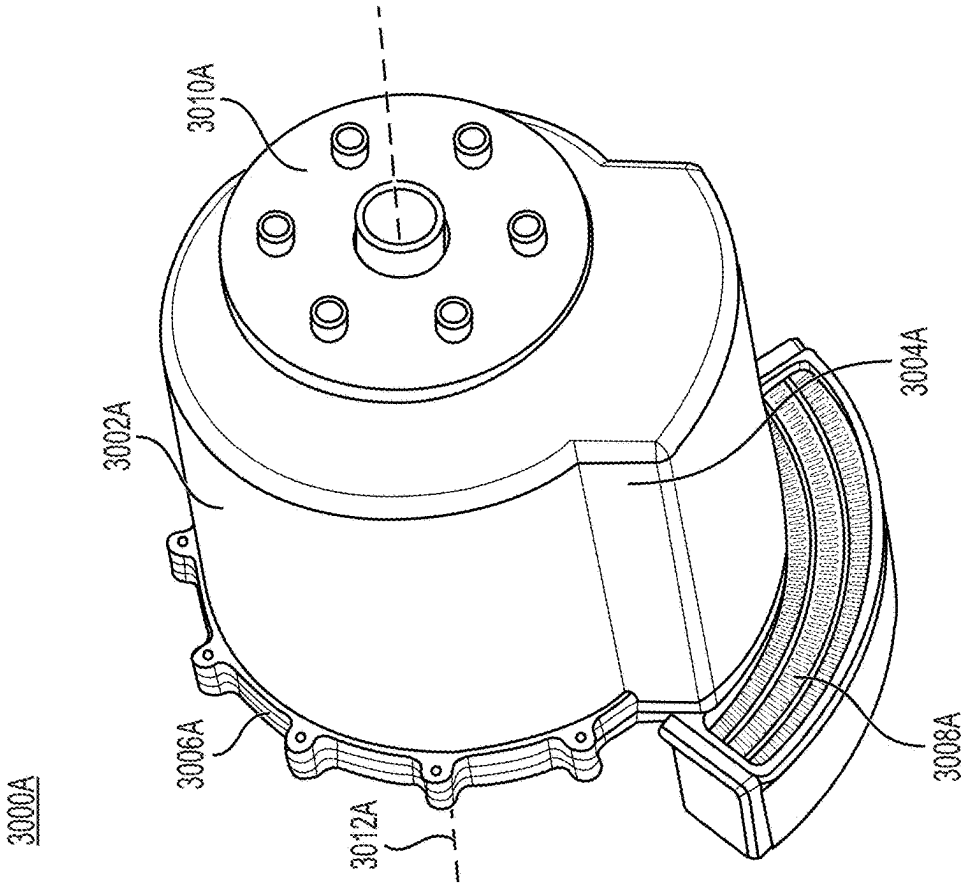

FIG. 30A

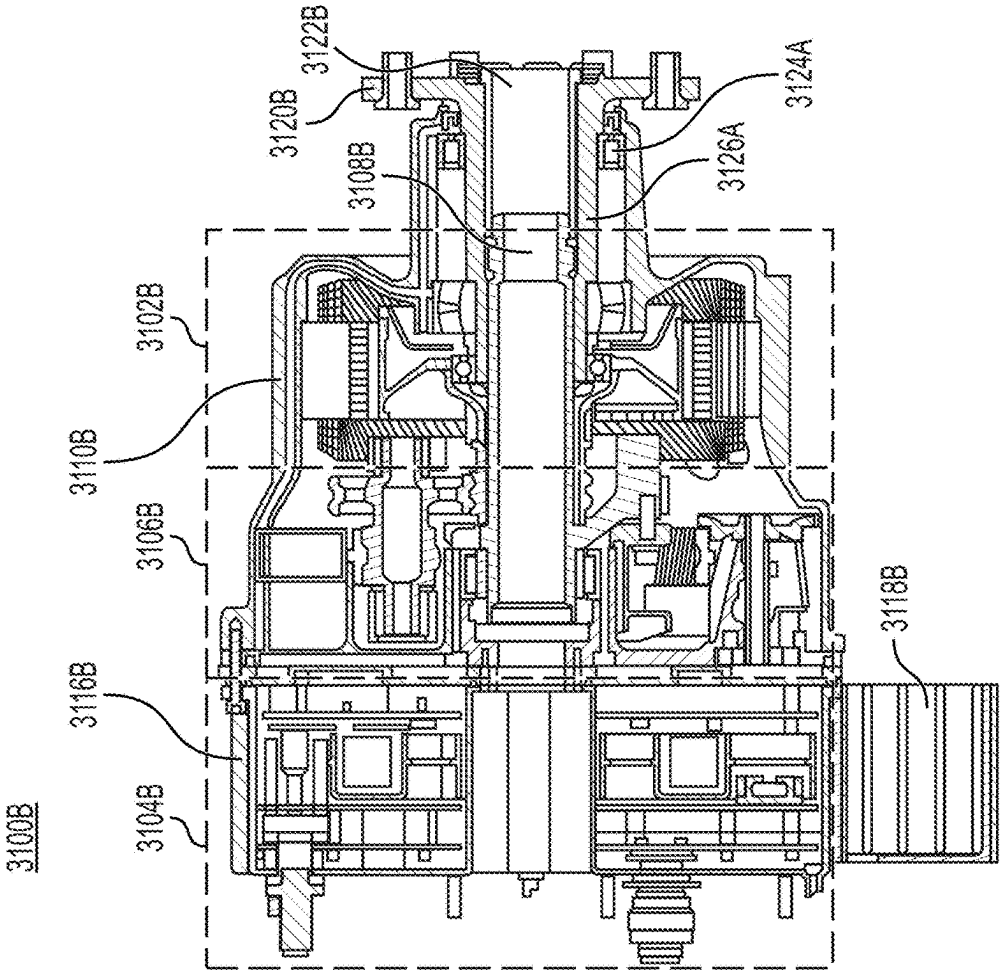

FIG. 31B

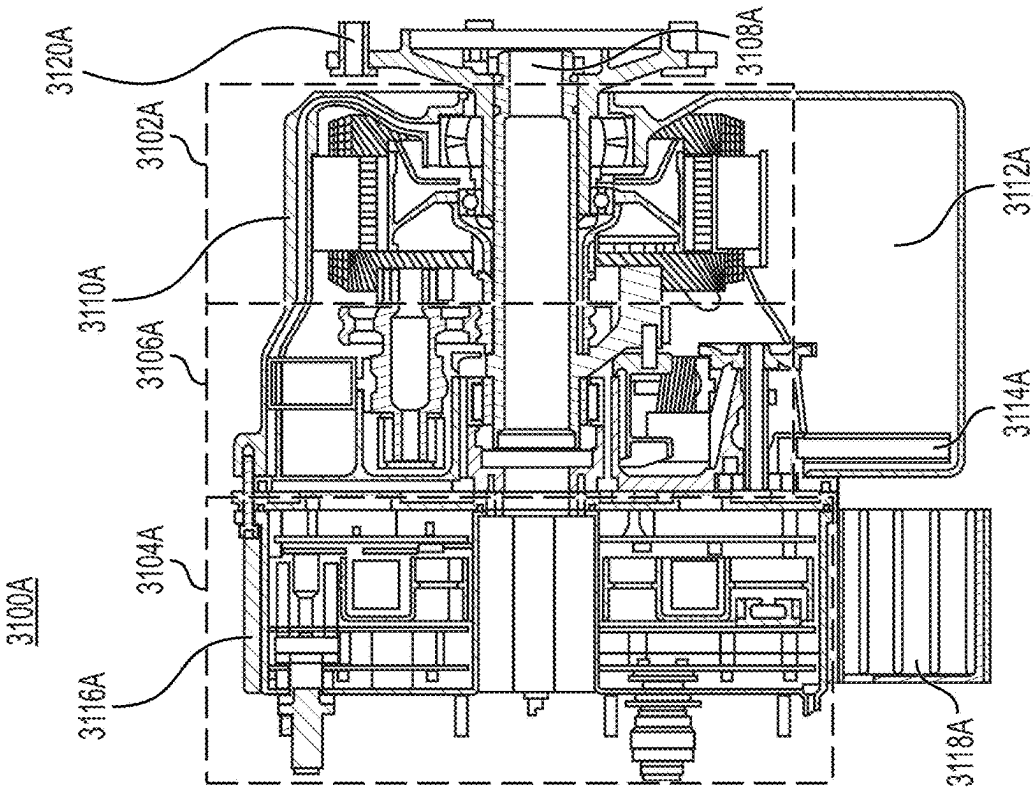

FIG. 31A

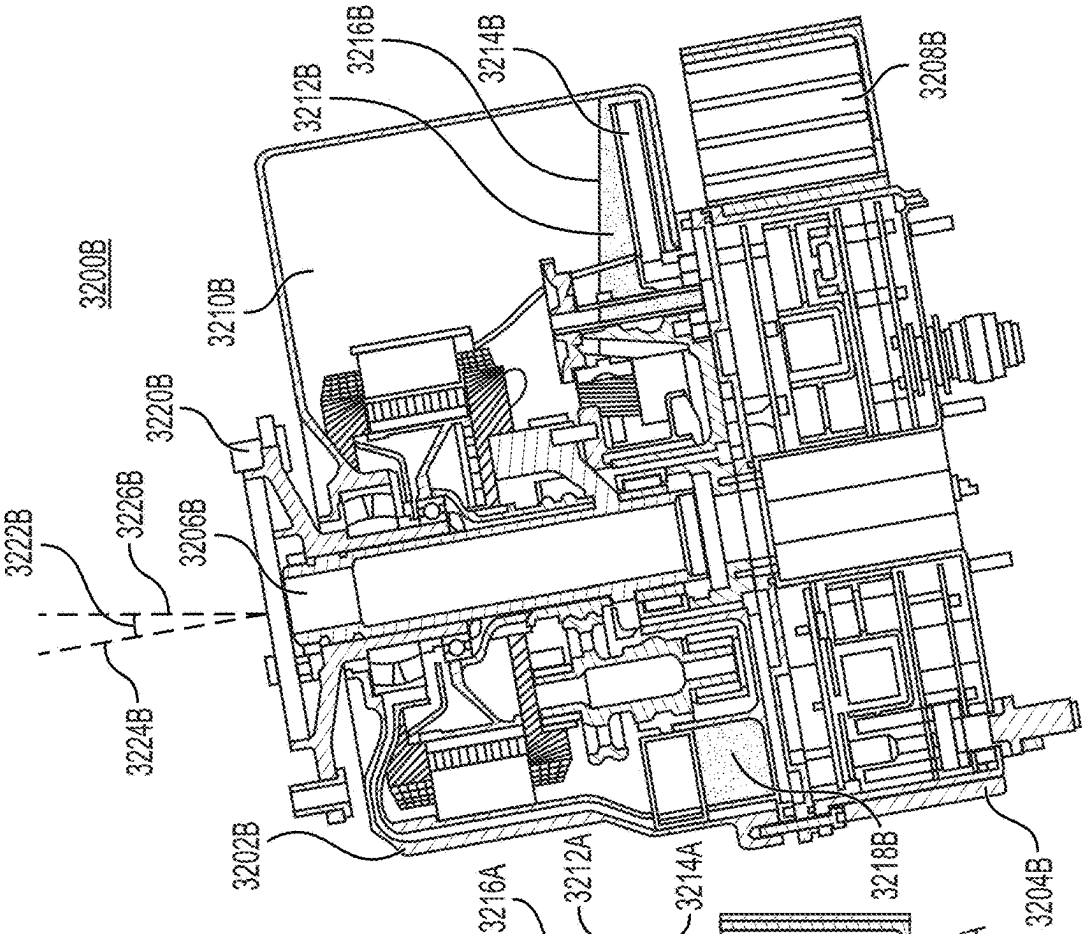

FIG. 32B

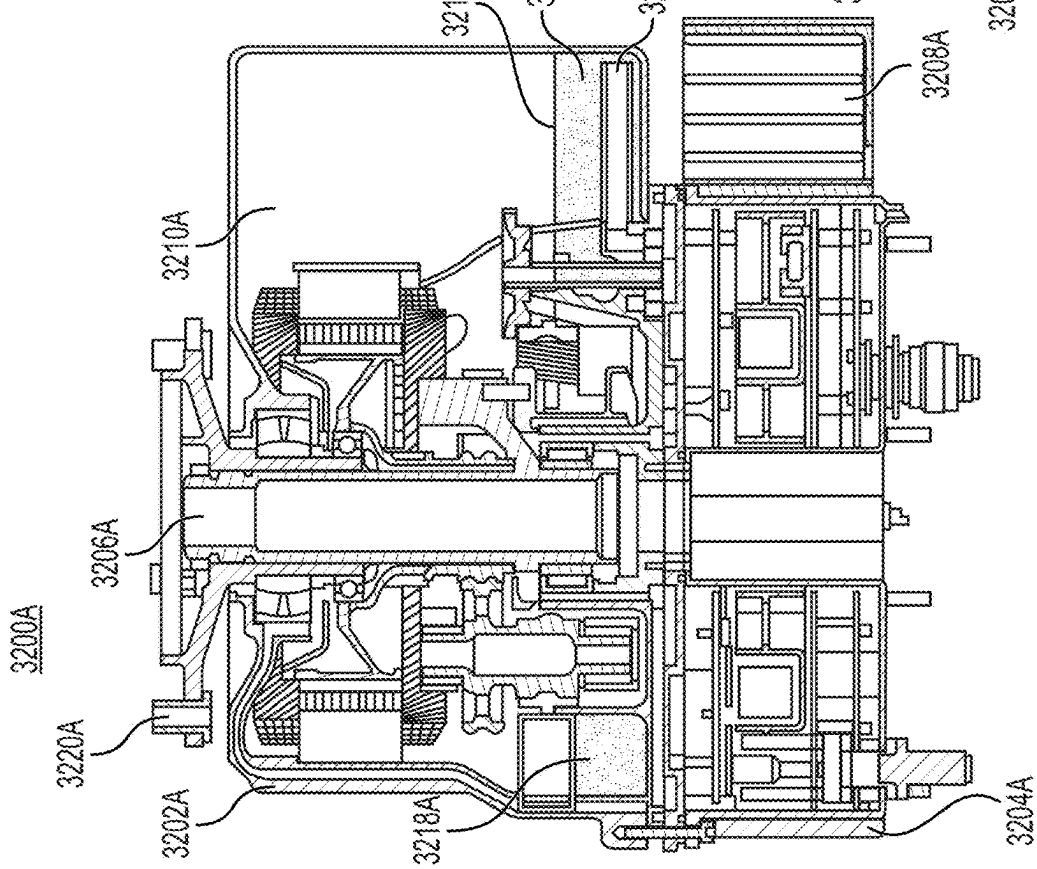

FIG. 32A

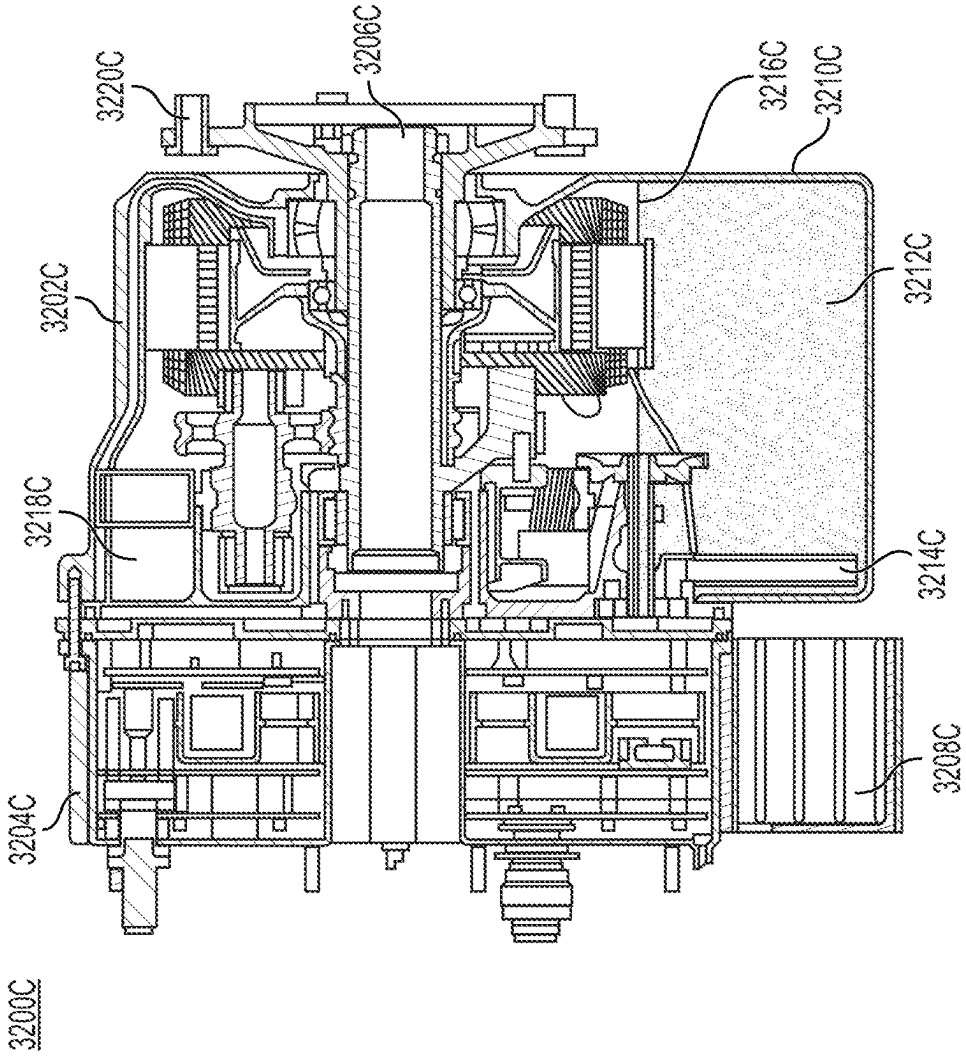
3200C
3204C
3218C
3202C
3220C
3206C
3216C
3210C
3212C
3214C
3208C

FIG. 32C

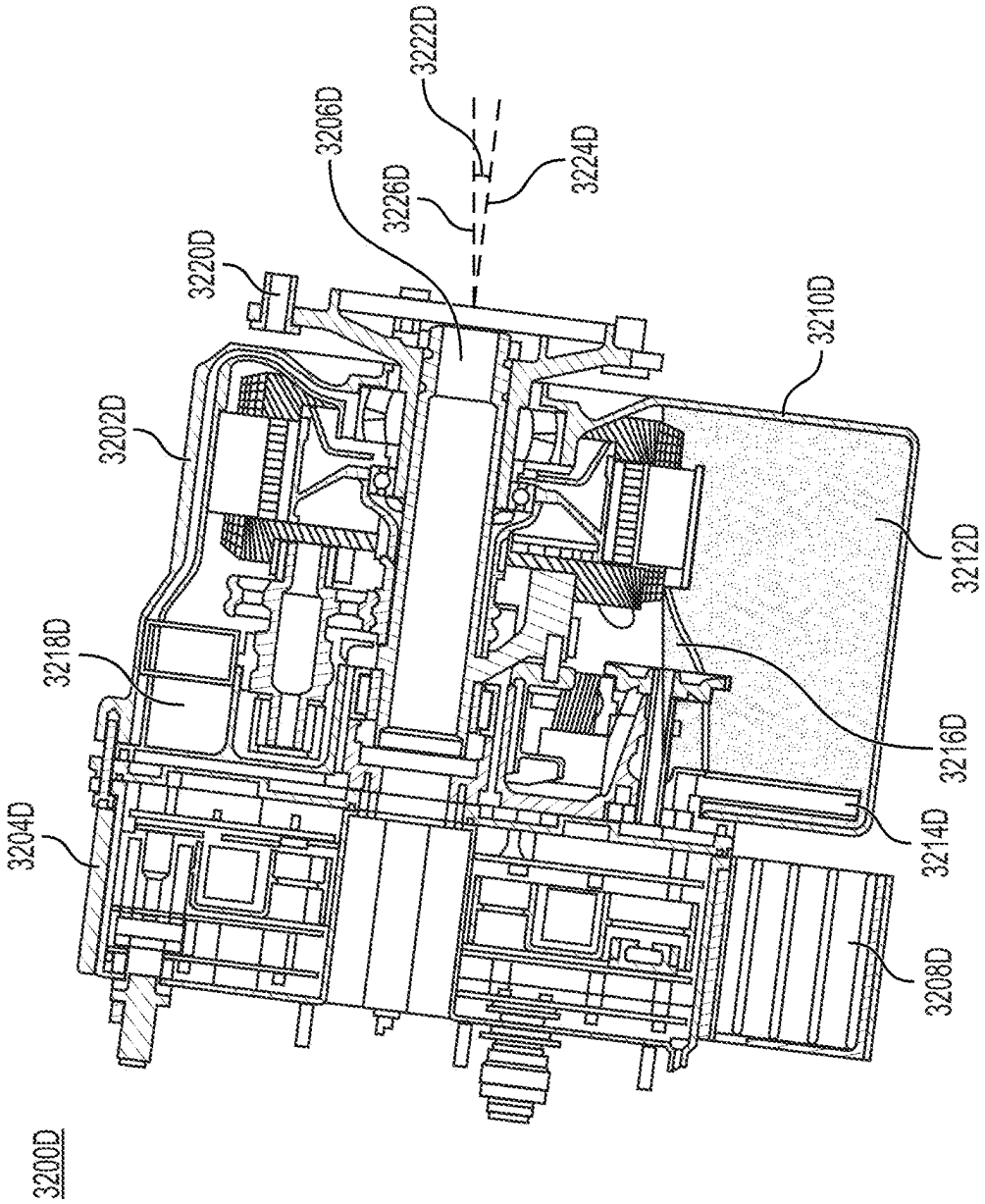
3200D
3204D
3218D
3202D
3220D
3206D
3226D
3222D
3224D
3210D
3212D
3216D
3214D
3208D

FIG. 32D

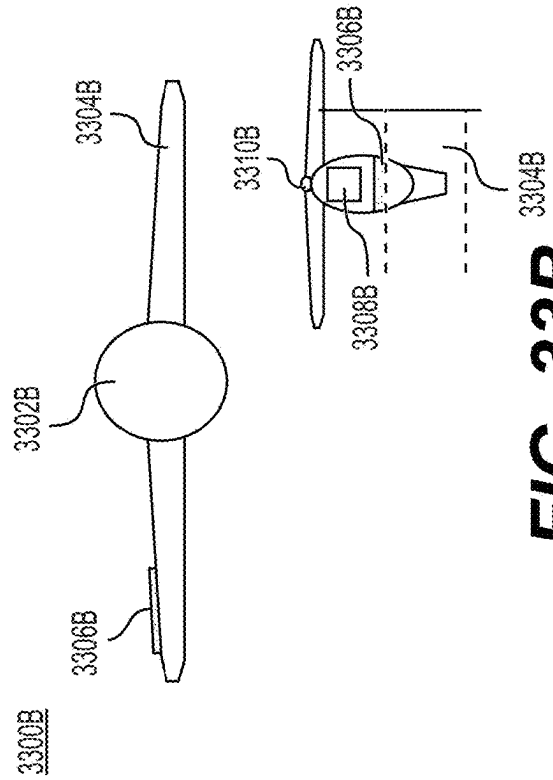

FIG. 33B

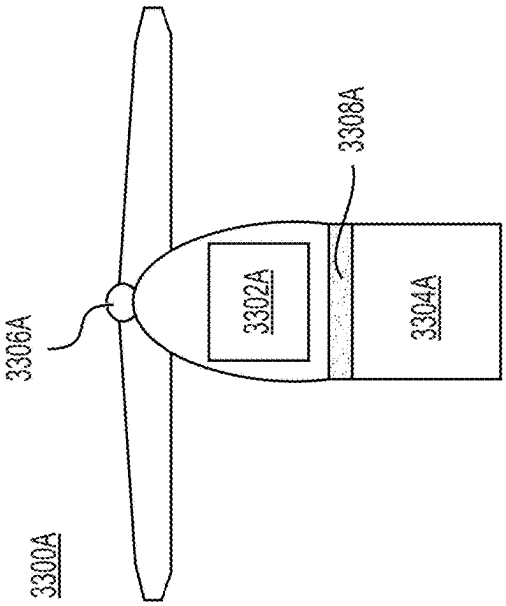

FIG. 33A

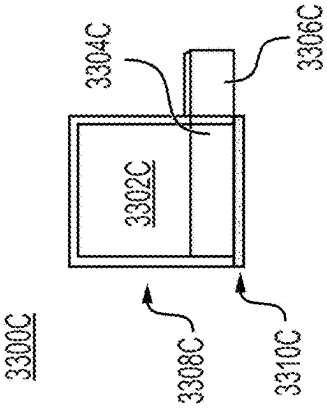

FIG. 33C

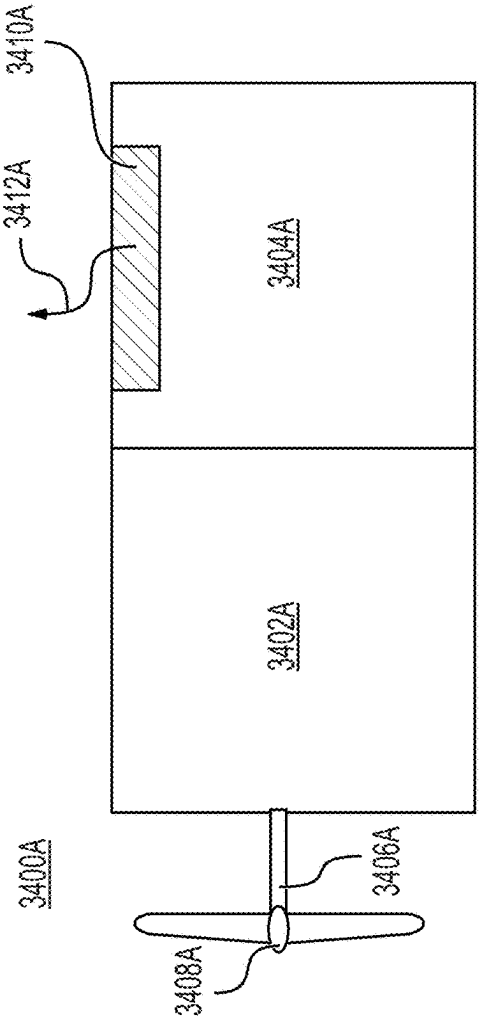

FIG. 34A

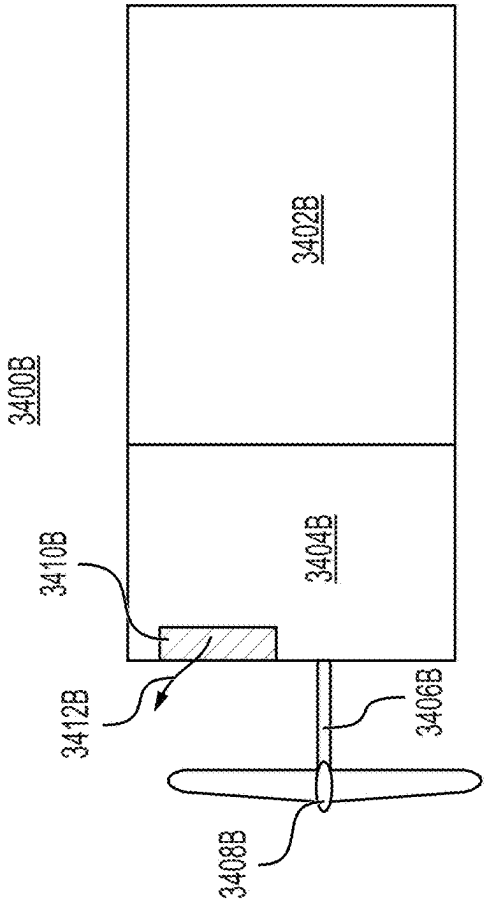

FIG. 34B

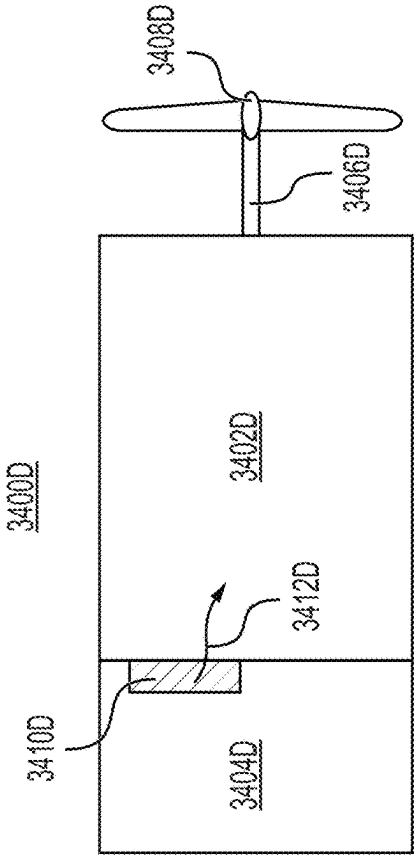

FIG. 34D

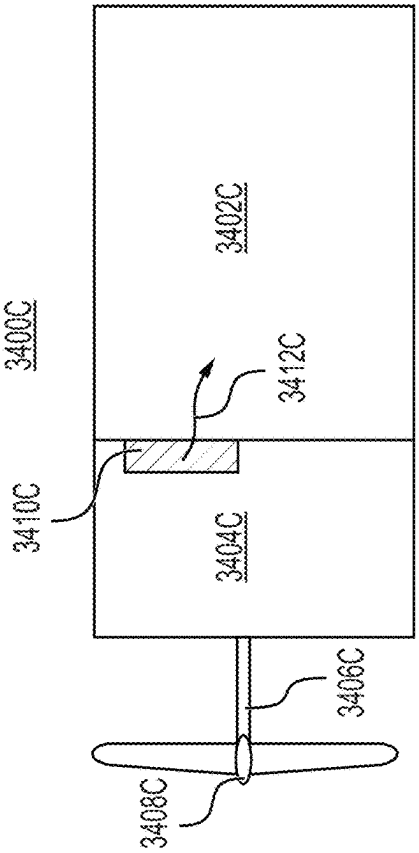

FIG. 34C

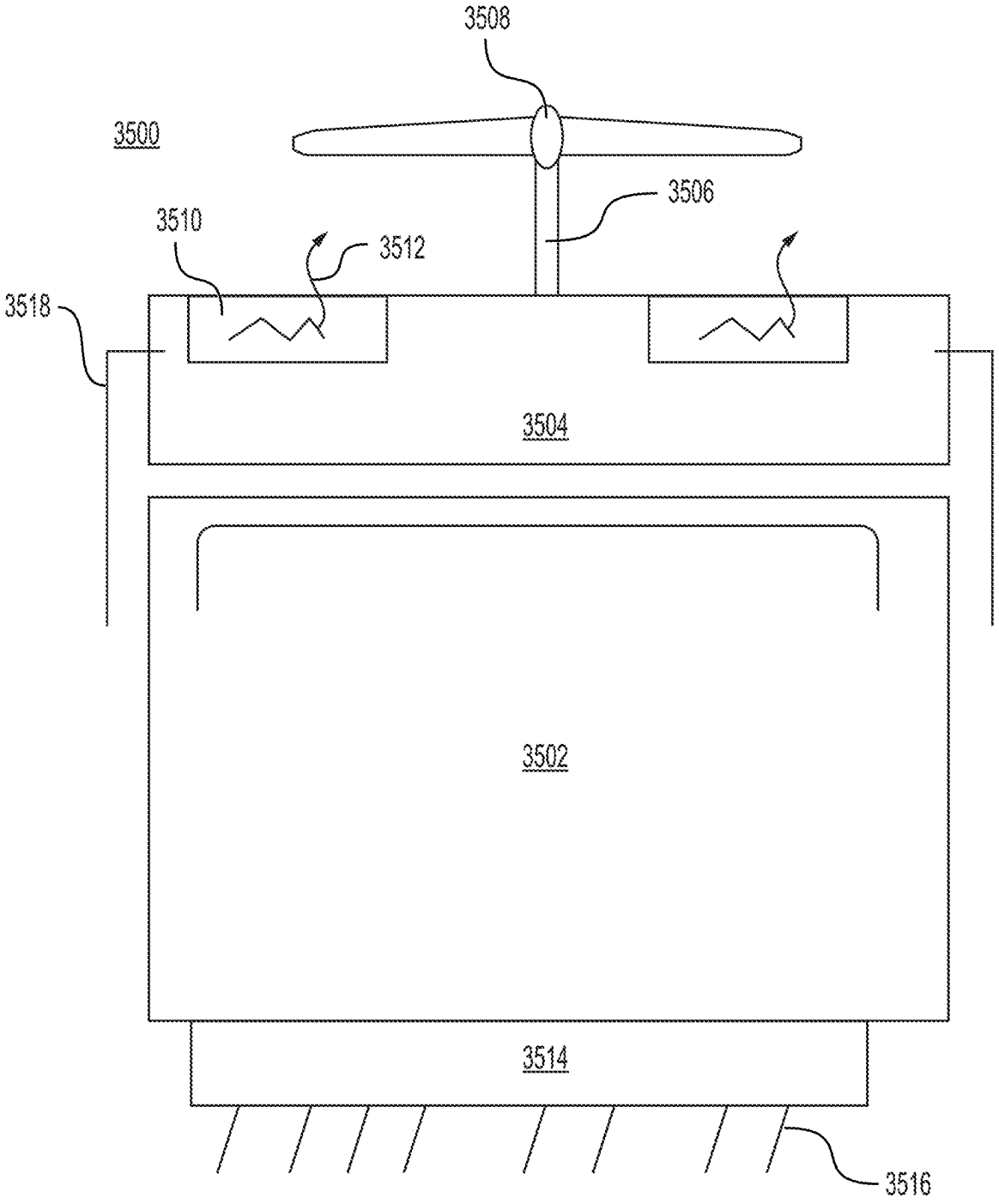

FIG. 35

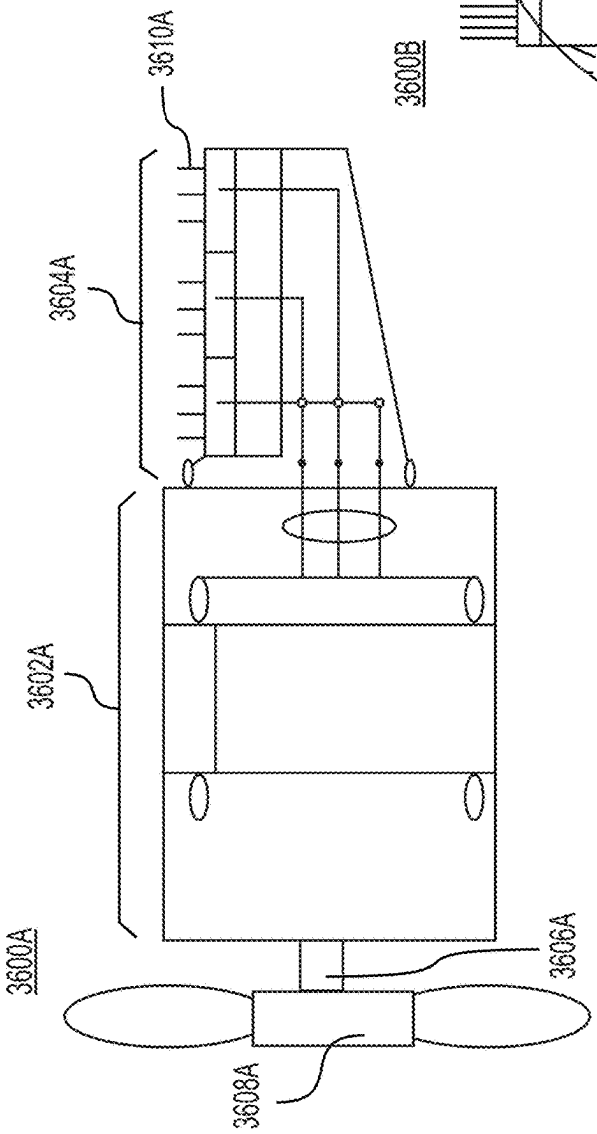

FIG. 36A

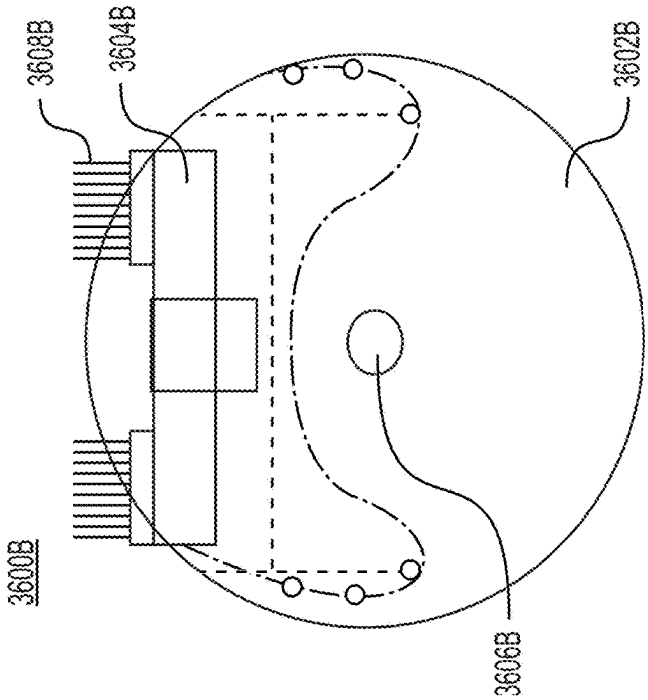

FIG. 36B

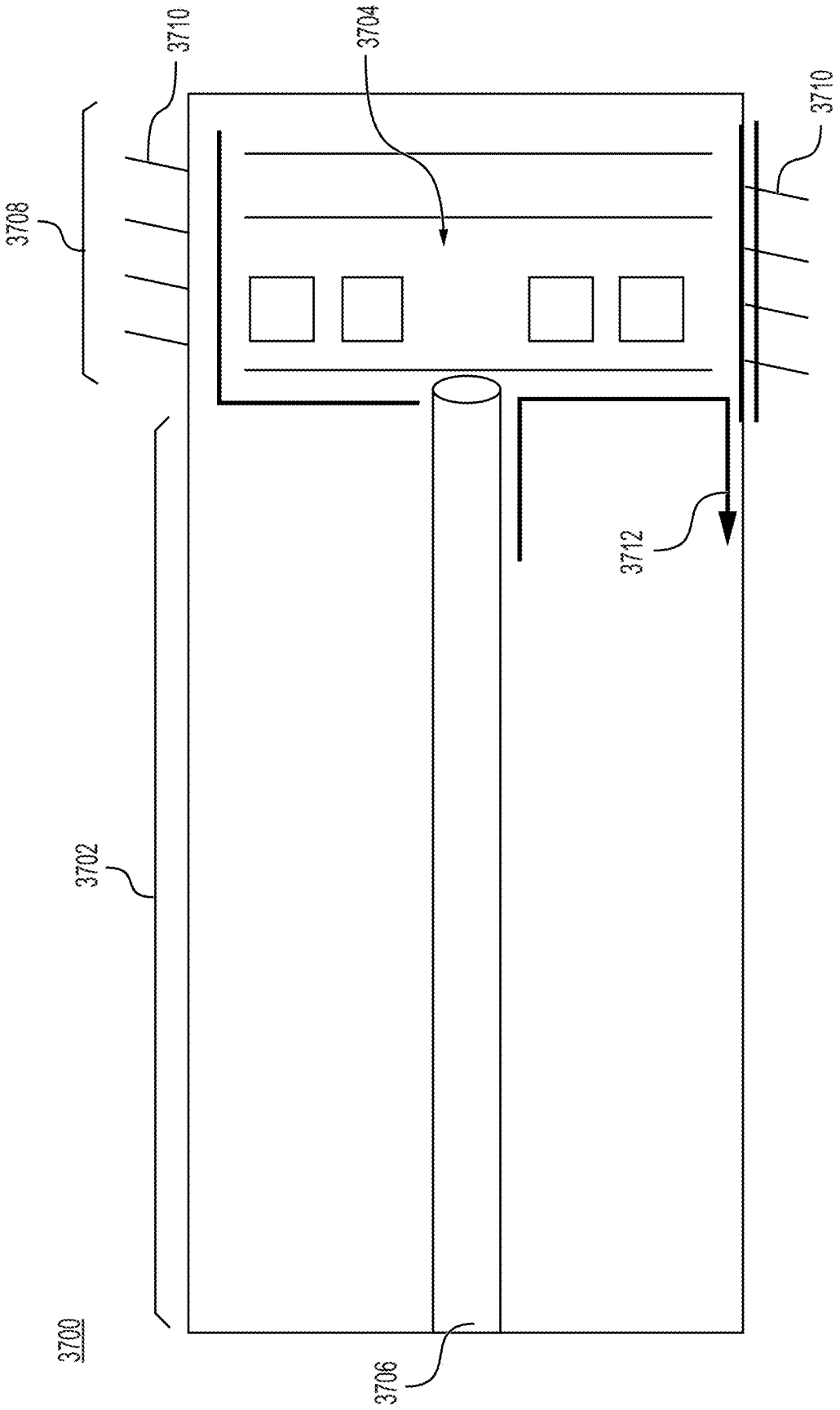

FIG. 37

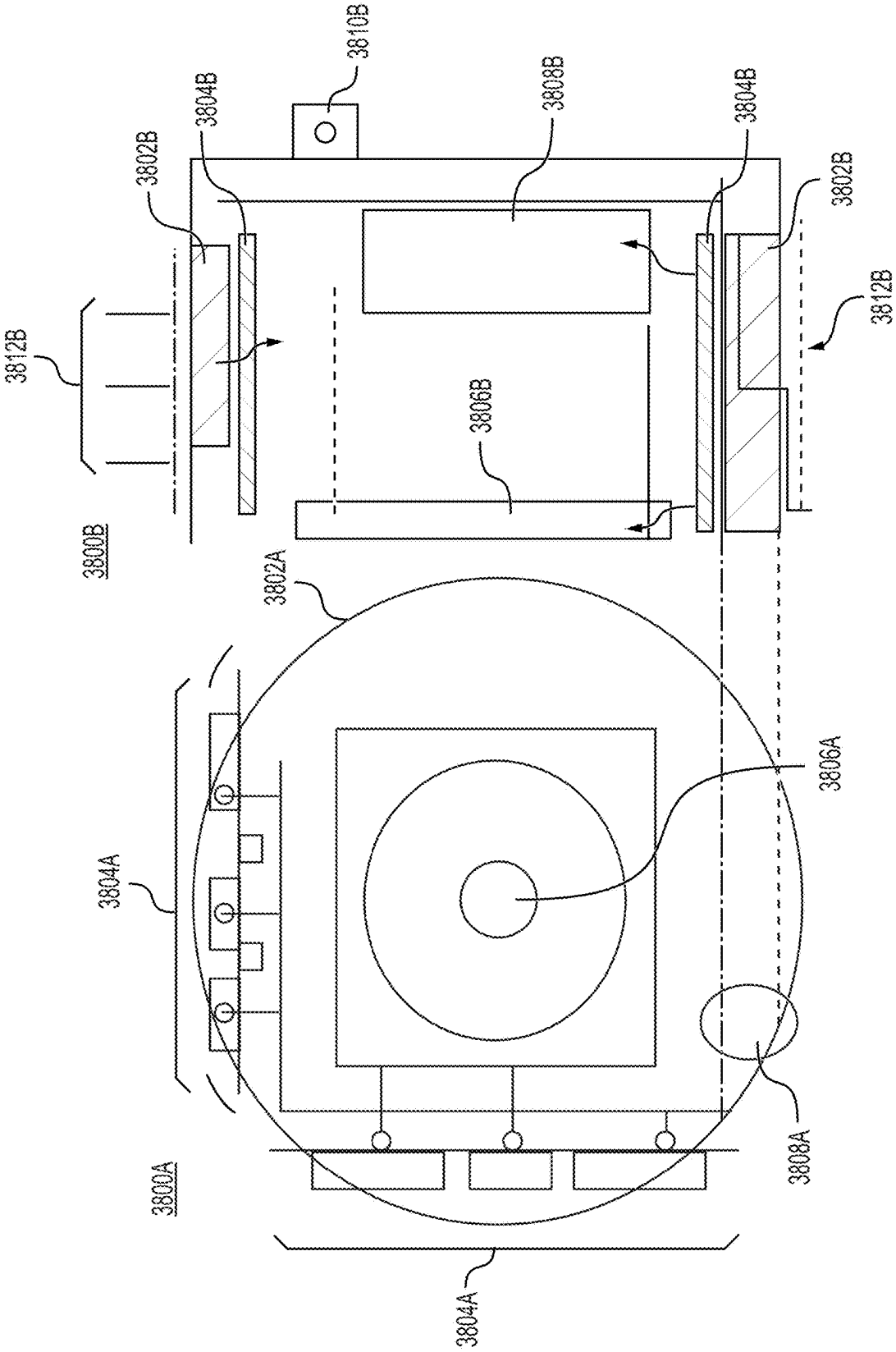

FIG. 38B

FIG. 38A

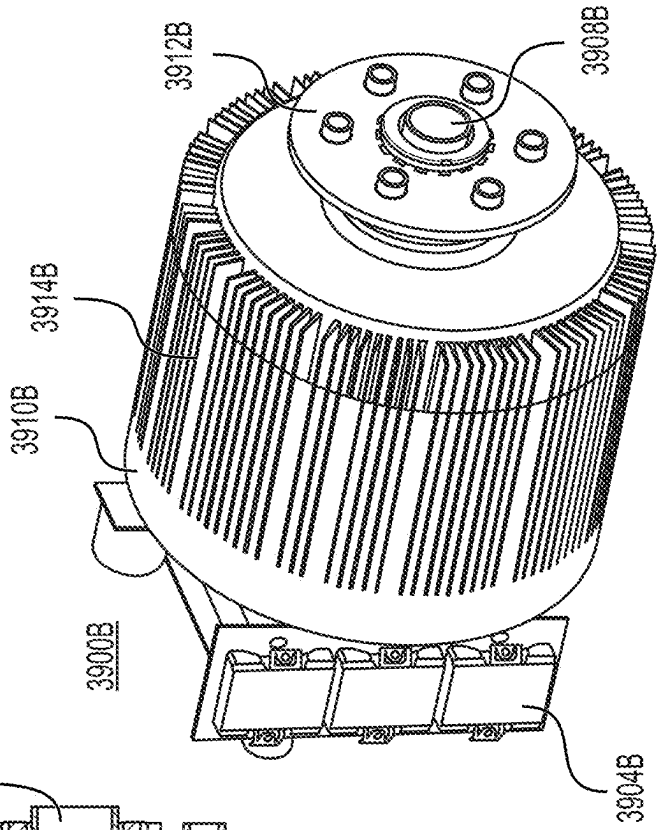

FIG. 39B

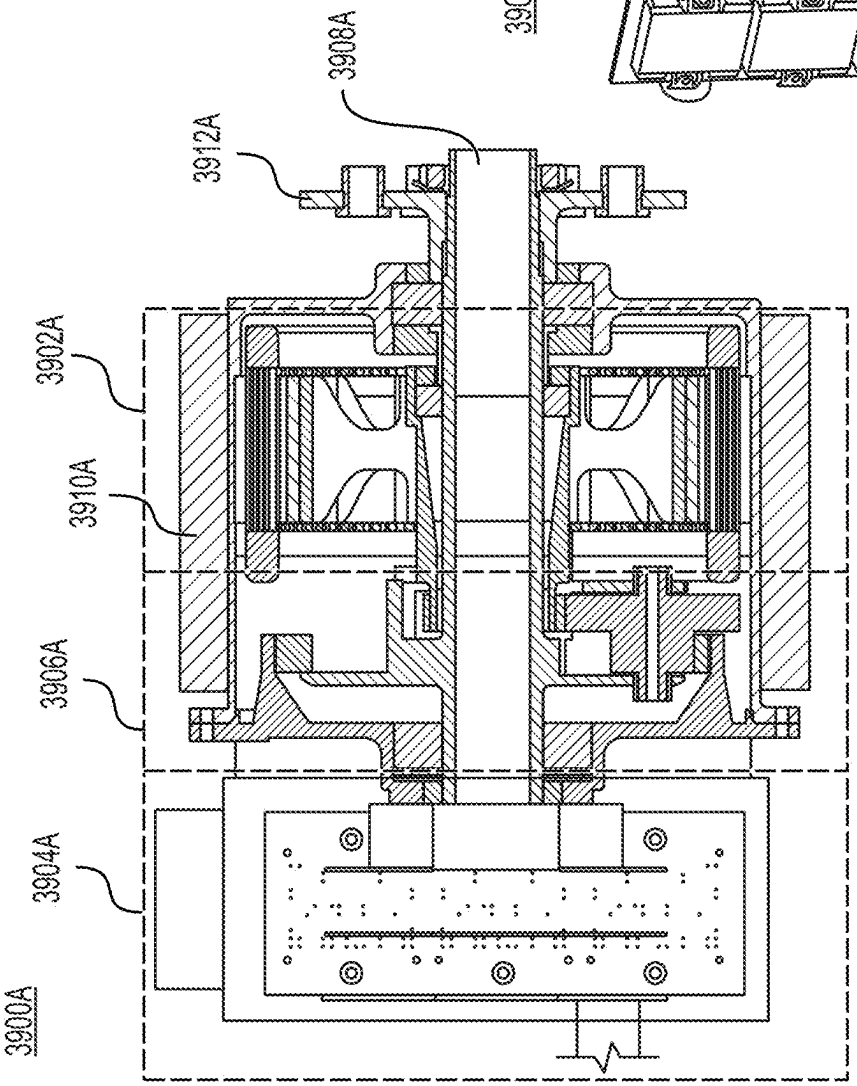

FIG. 39A

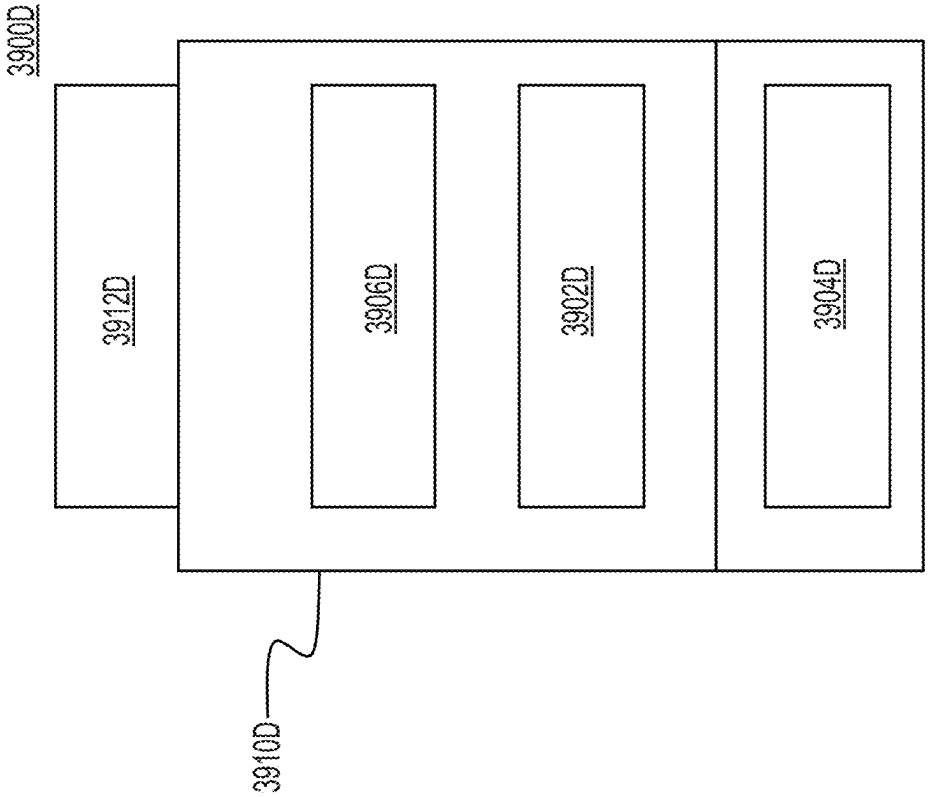

FIG. 39D

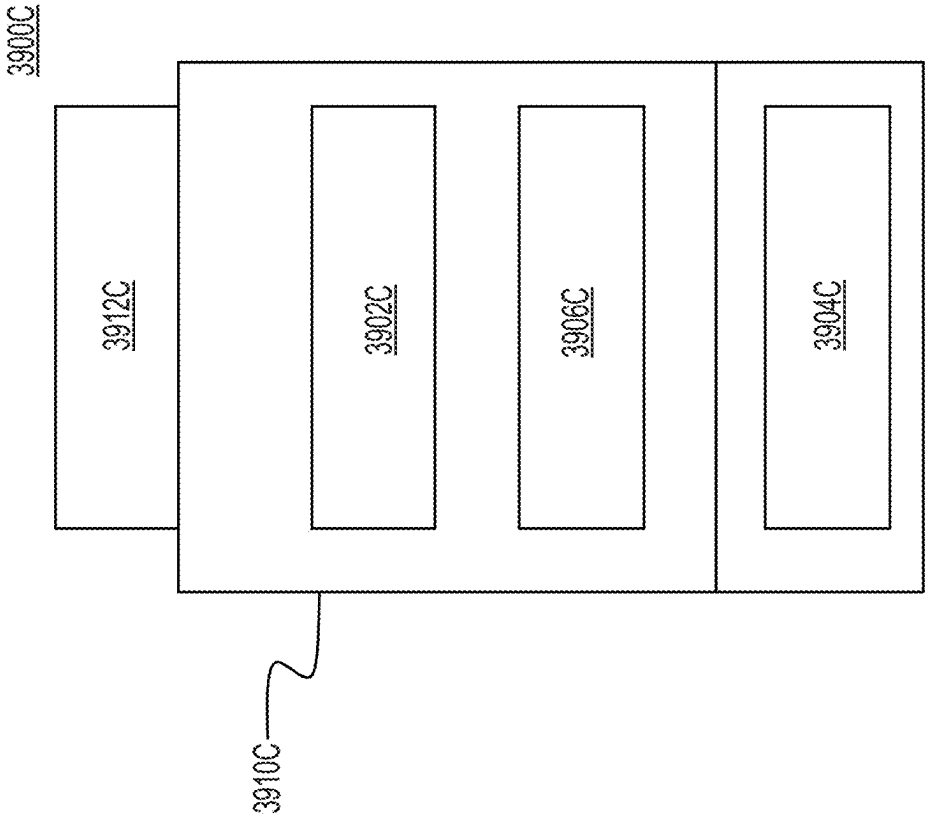

FIG. 39C

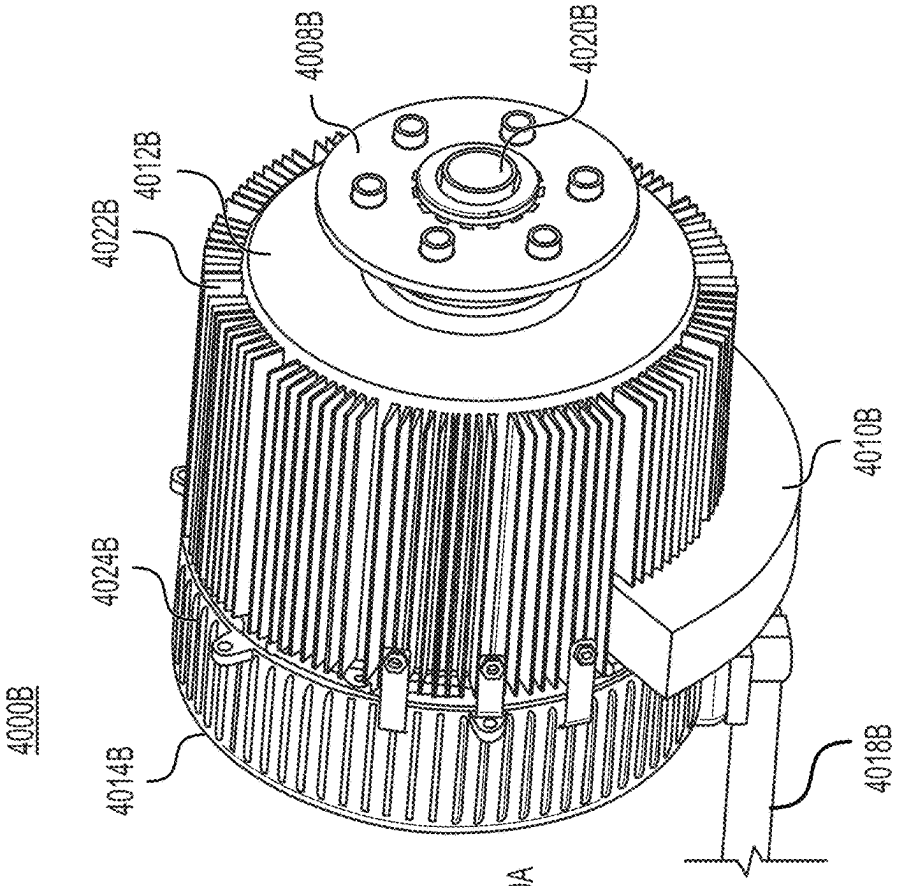

FIG. 40B

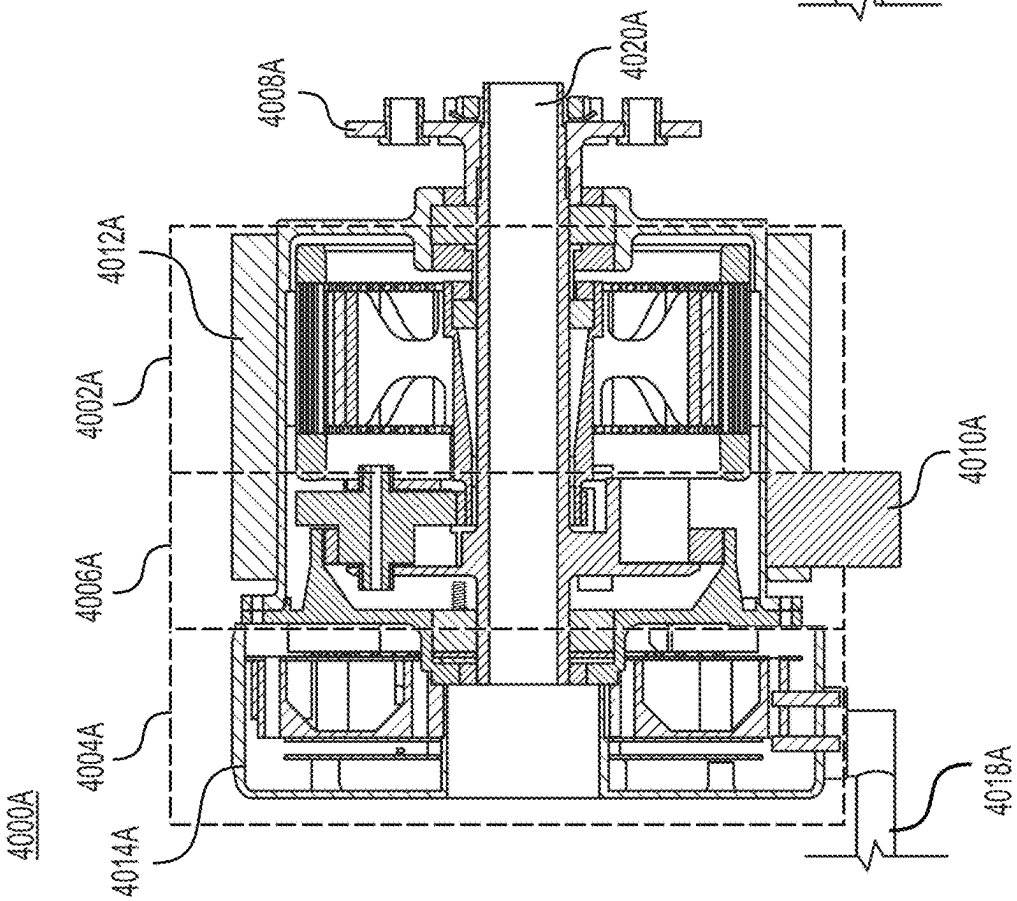

FIG. 40A

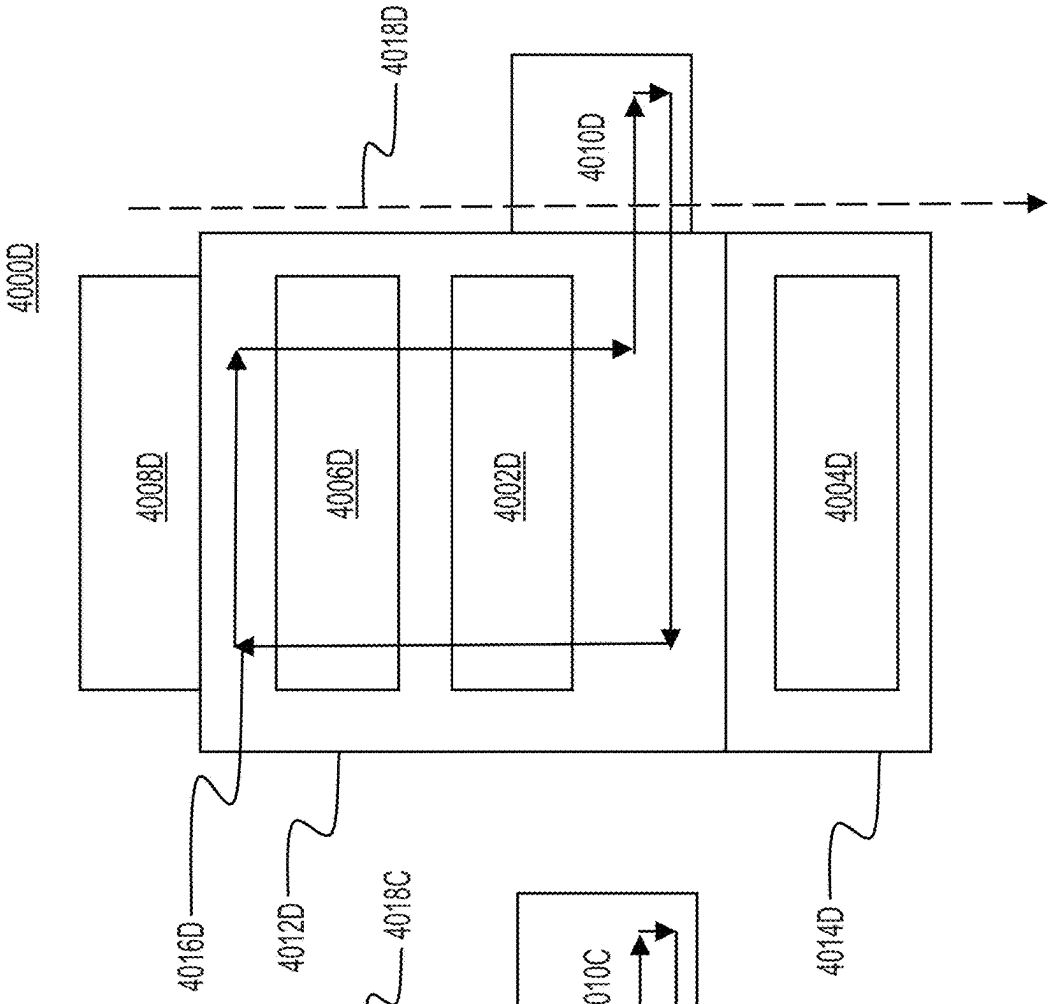

FIG. 40D

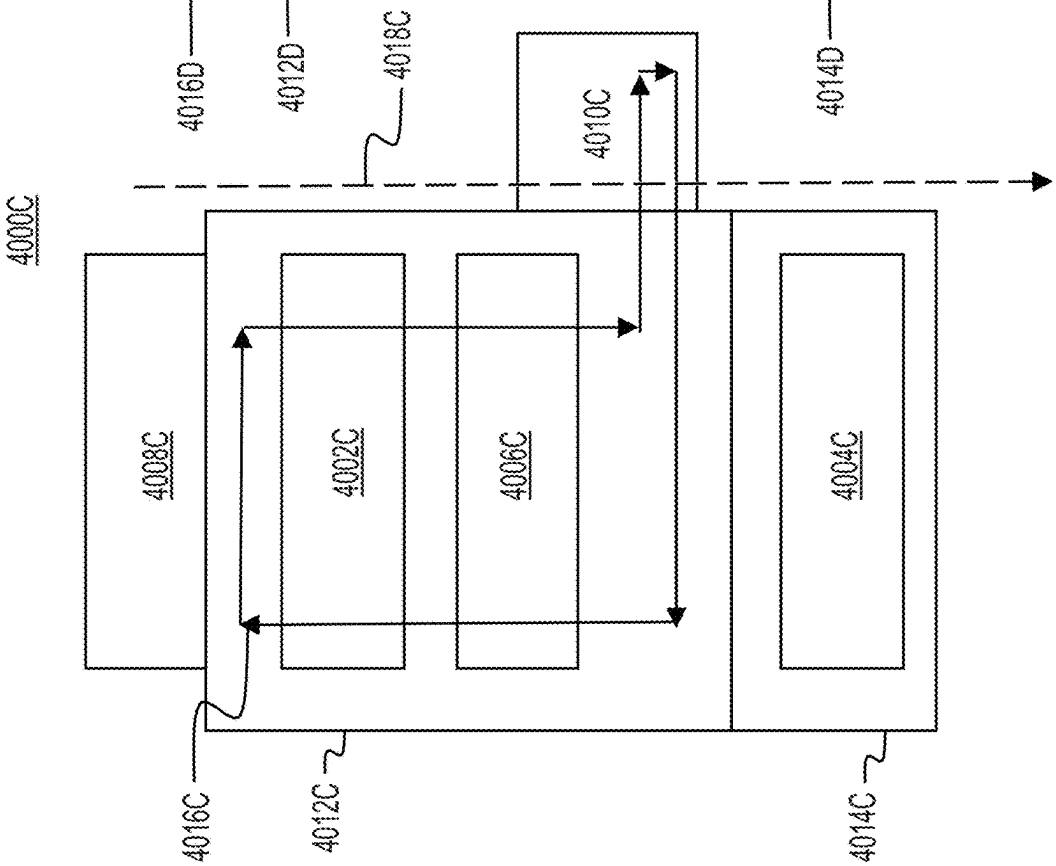

FIG. 40C

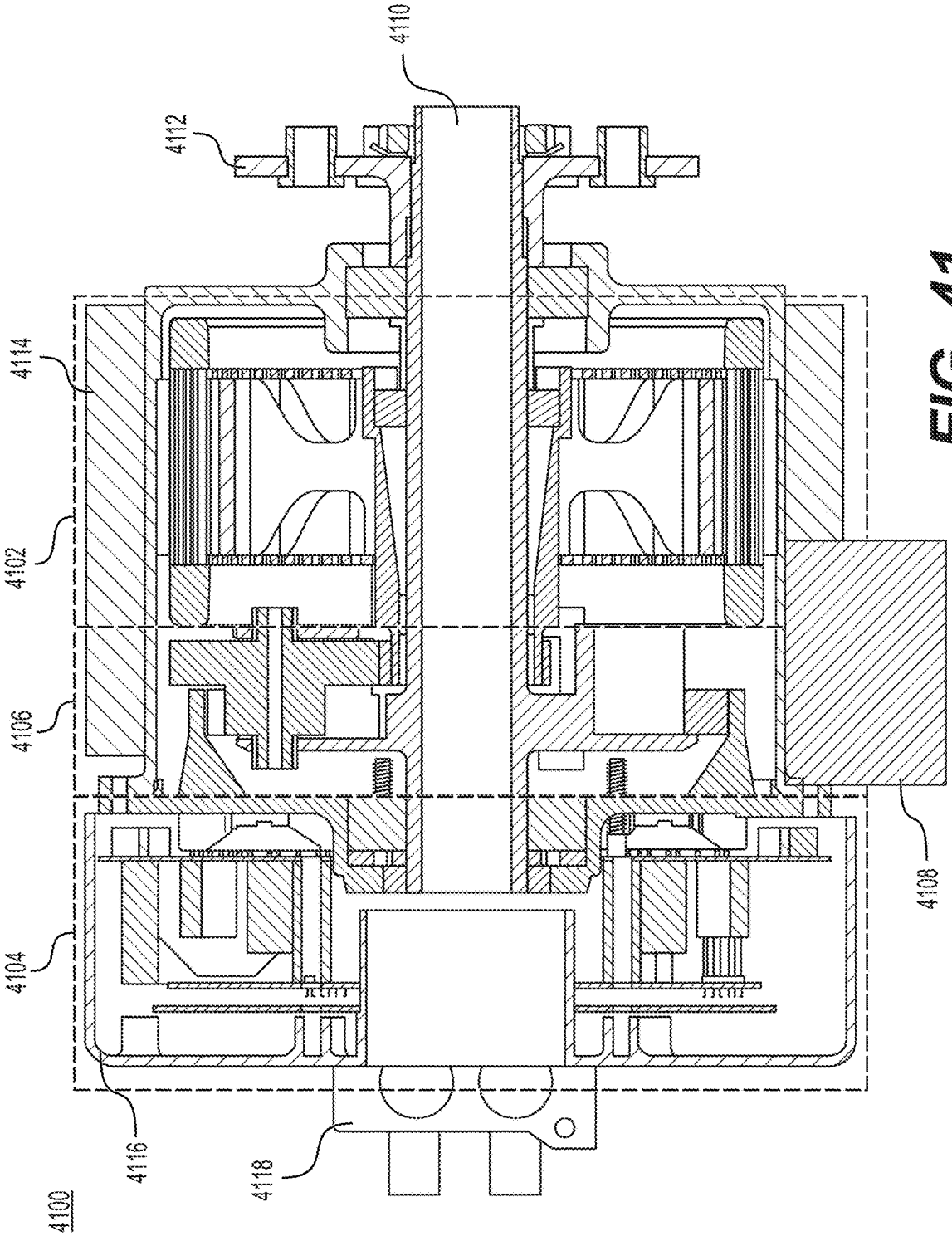

FIG. 41

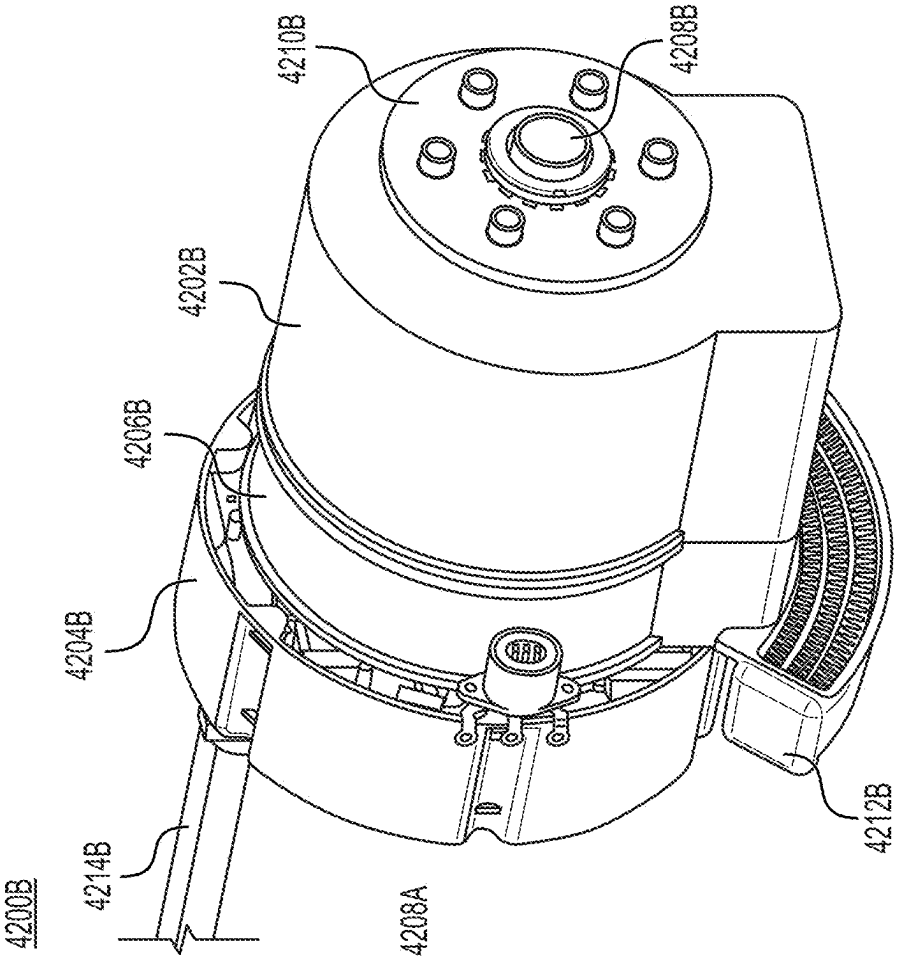

FIG. 42B

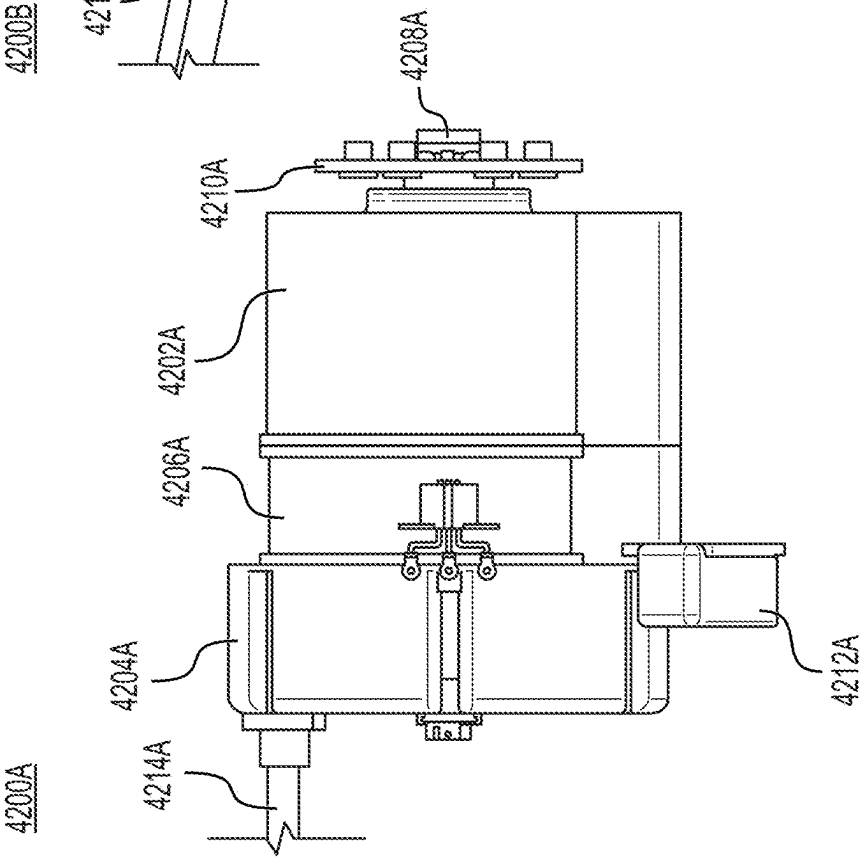

FIG. 42A

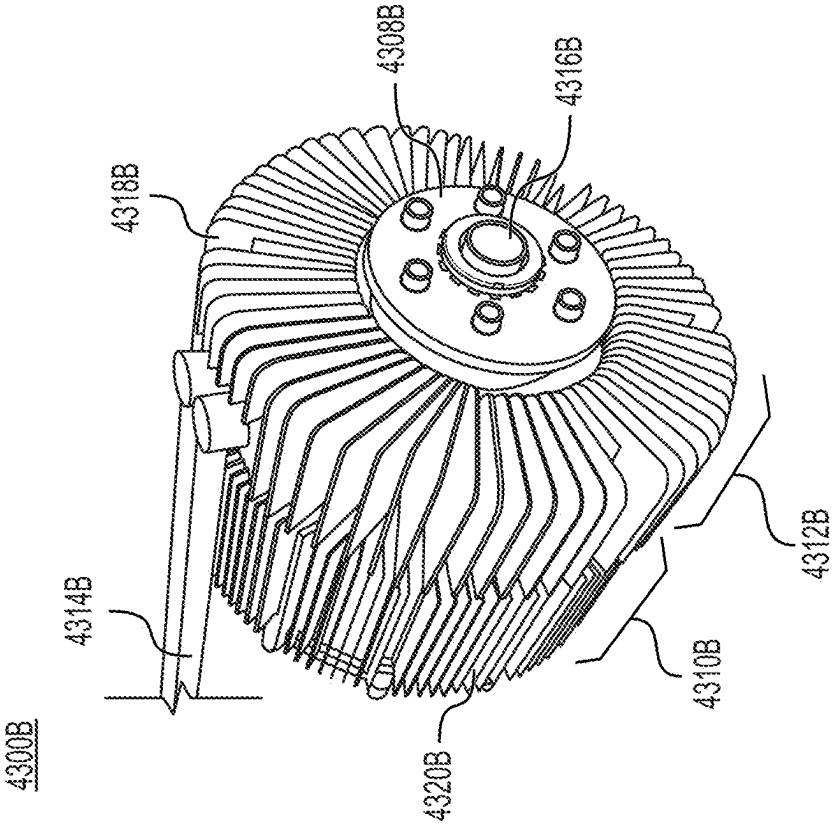

FIG. 43B

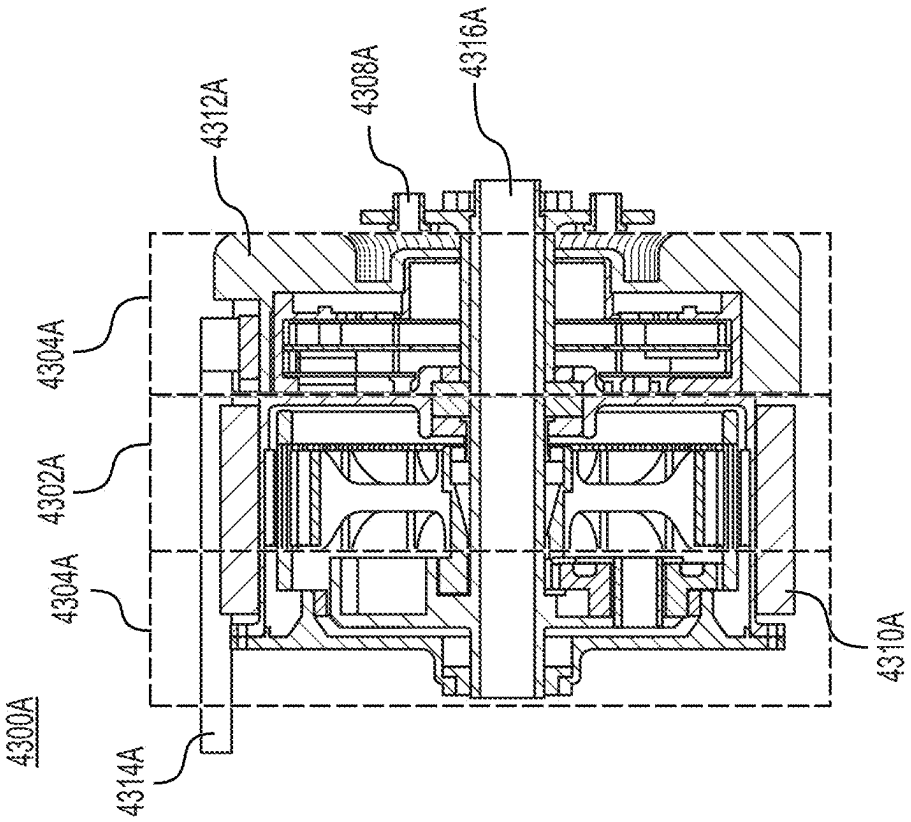

FIG. 43A

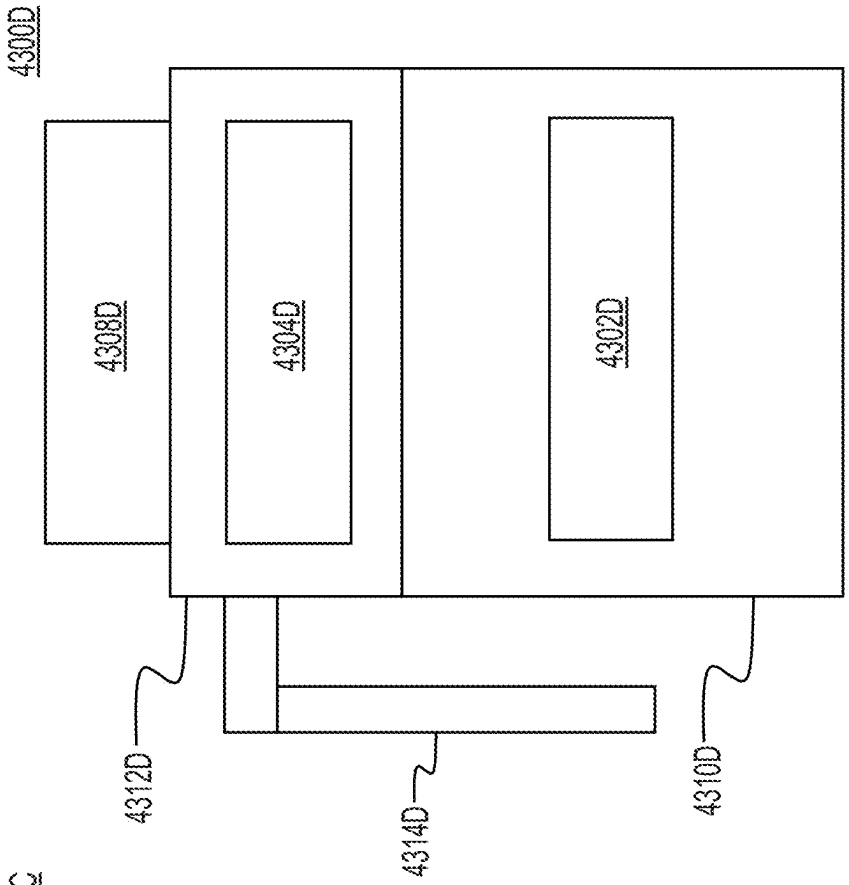

FIG. 43D

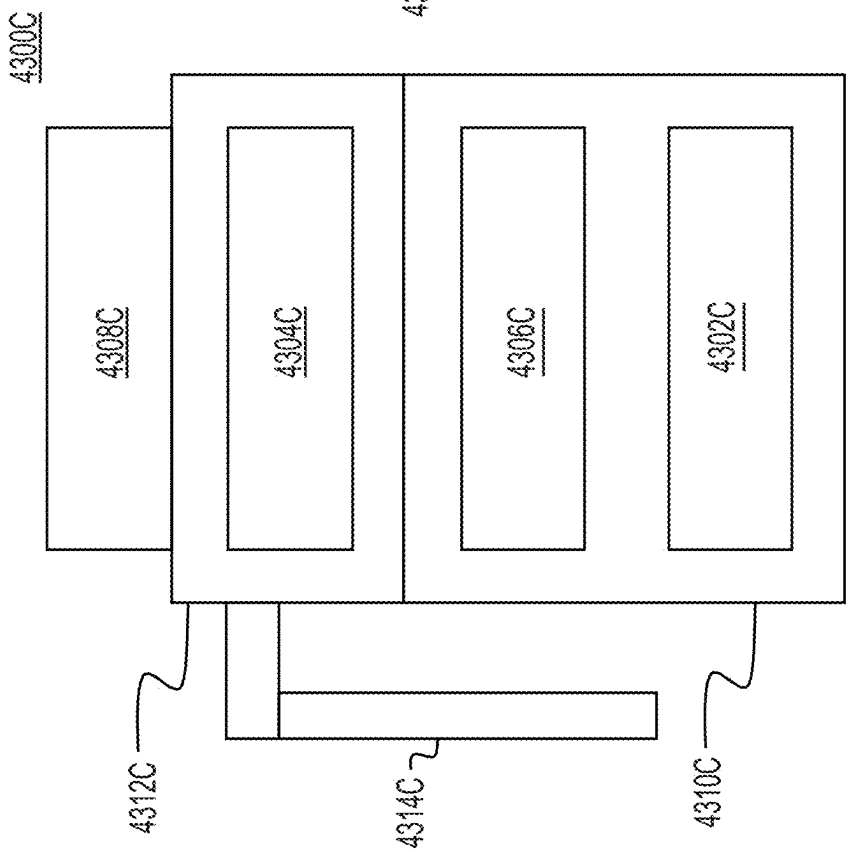

FIG. 43C

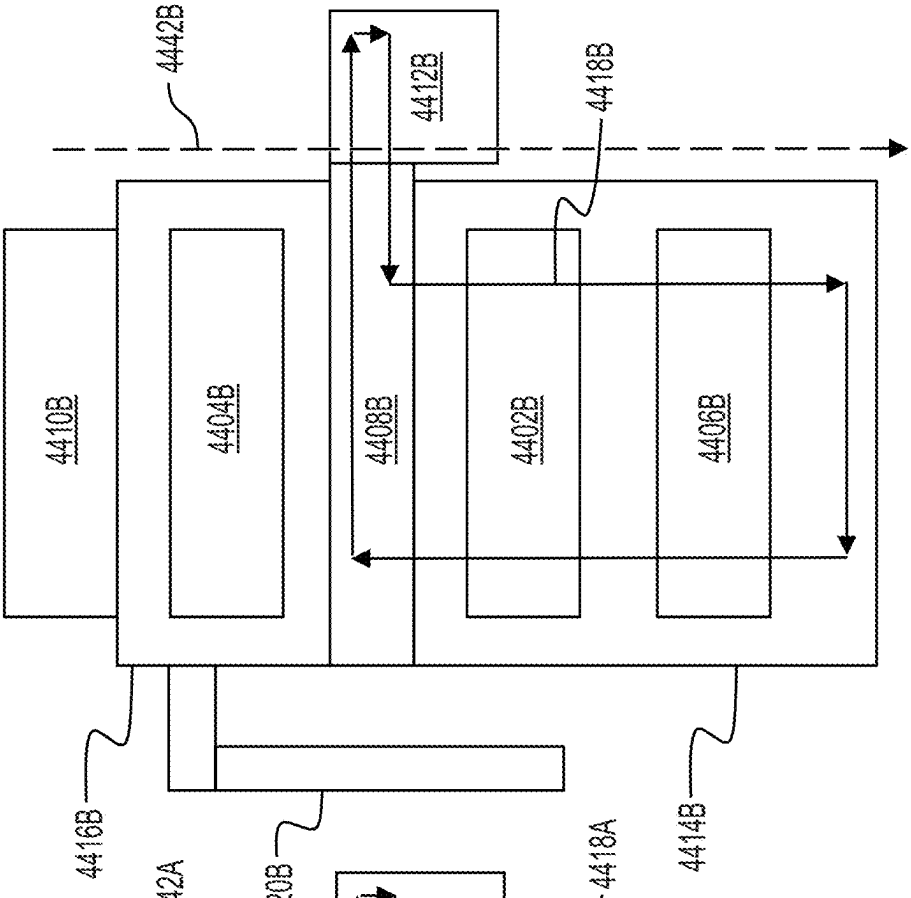

FIG. 44B

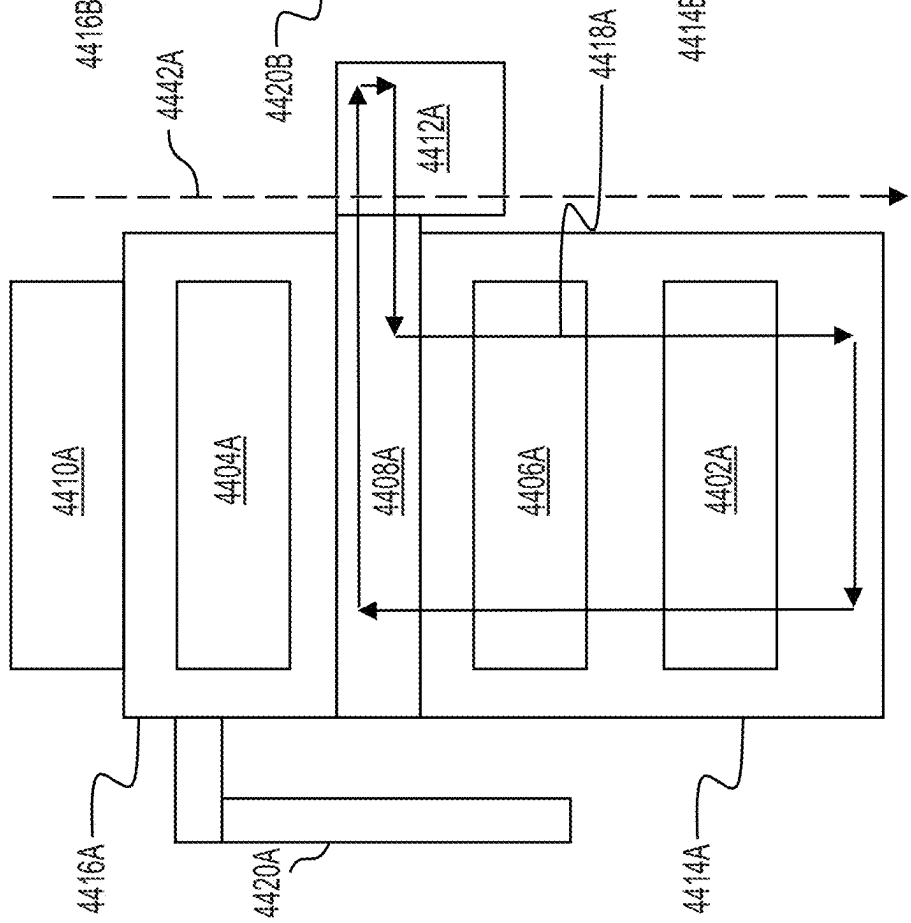

FIG. 44A

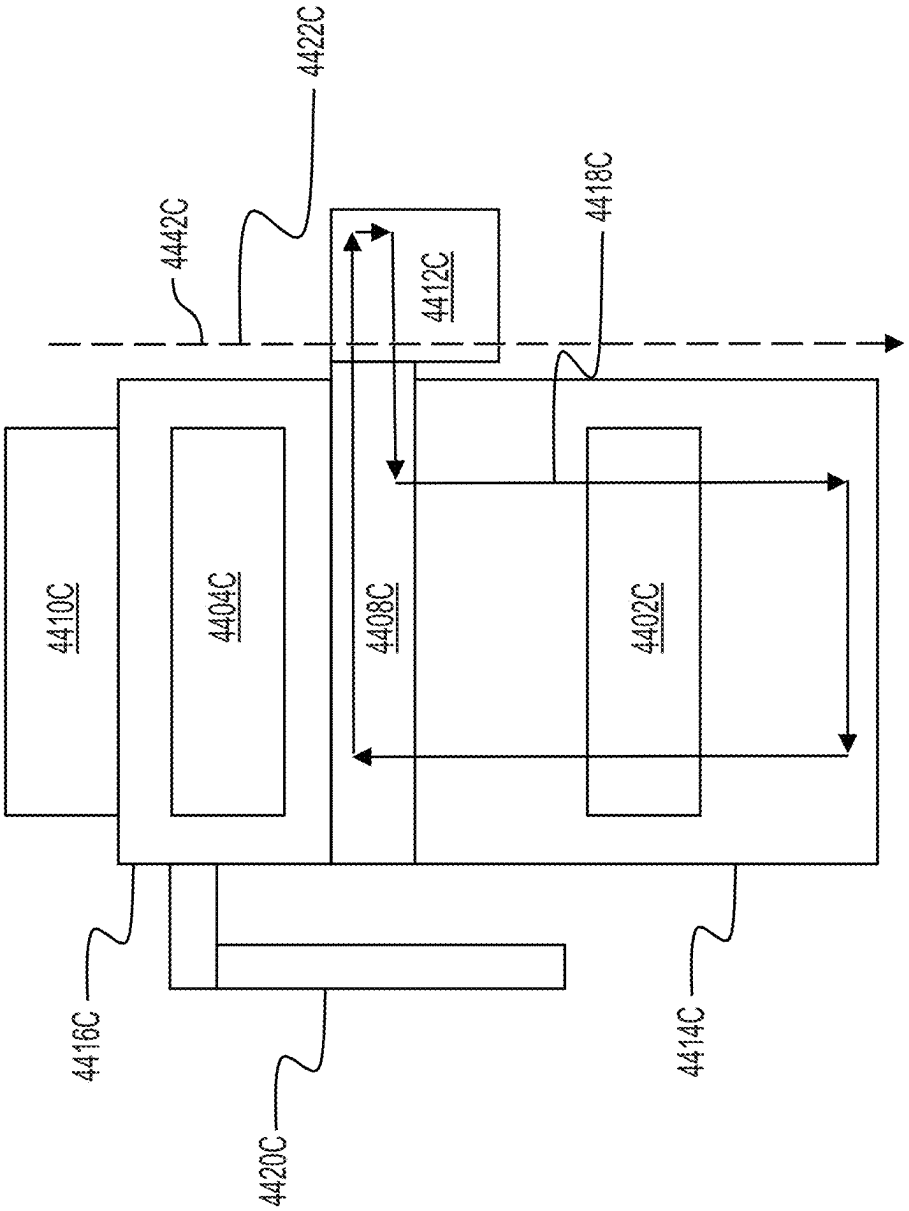
4410C
4404C
4416C
4420C
4408C
4412C
4442C
4422C
4418C
4402C
4414C

FIG. 44C

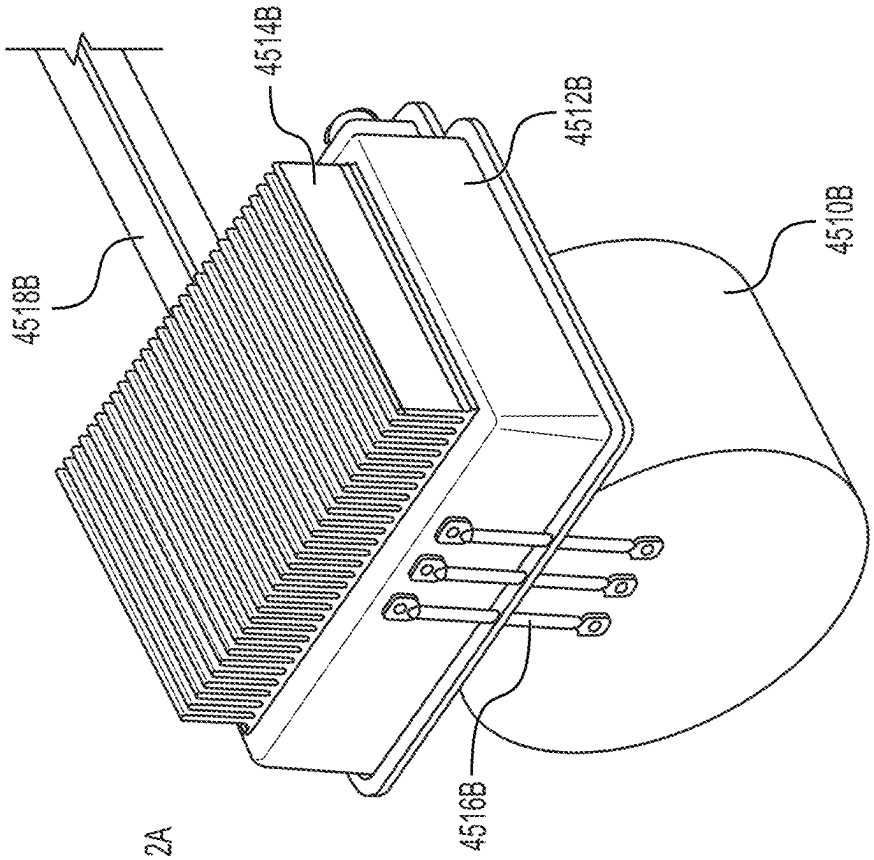

FIG. 45B

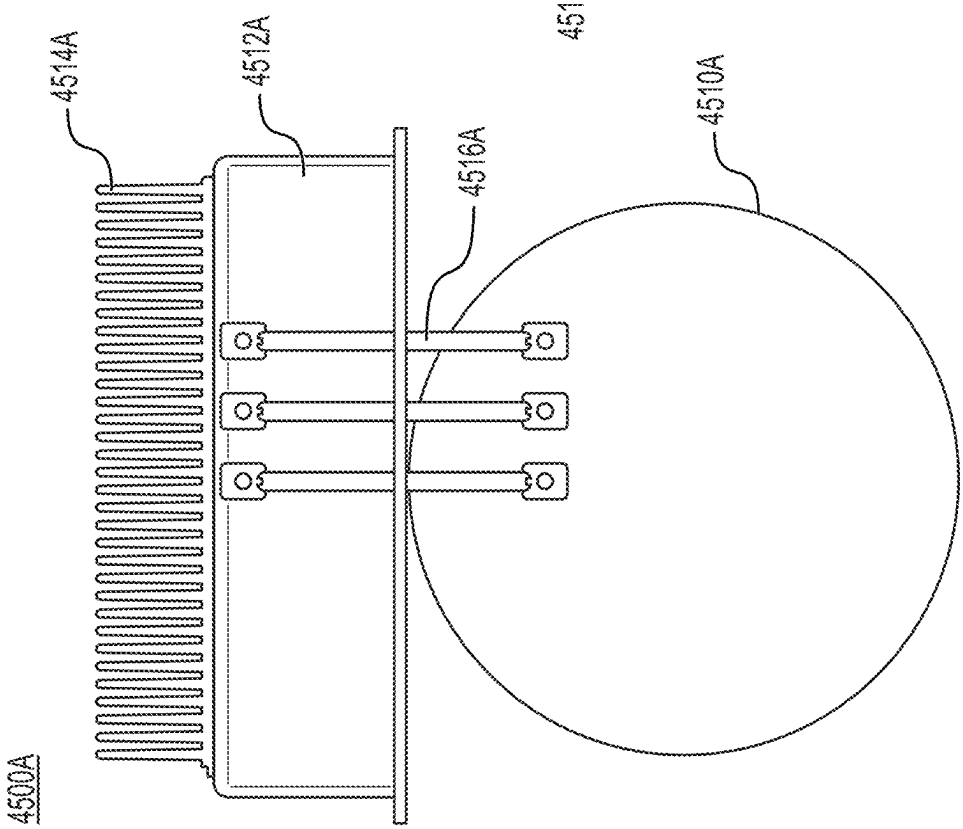

FIG. 45A

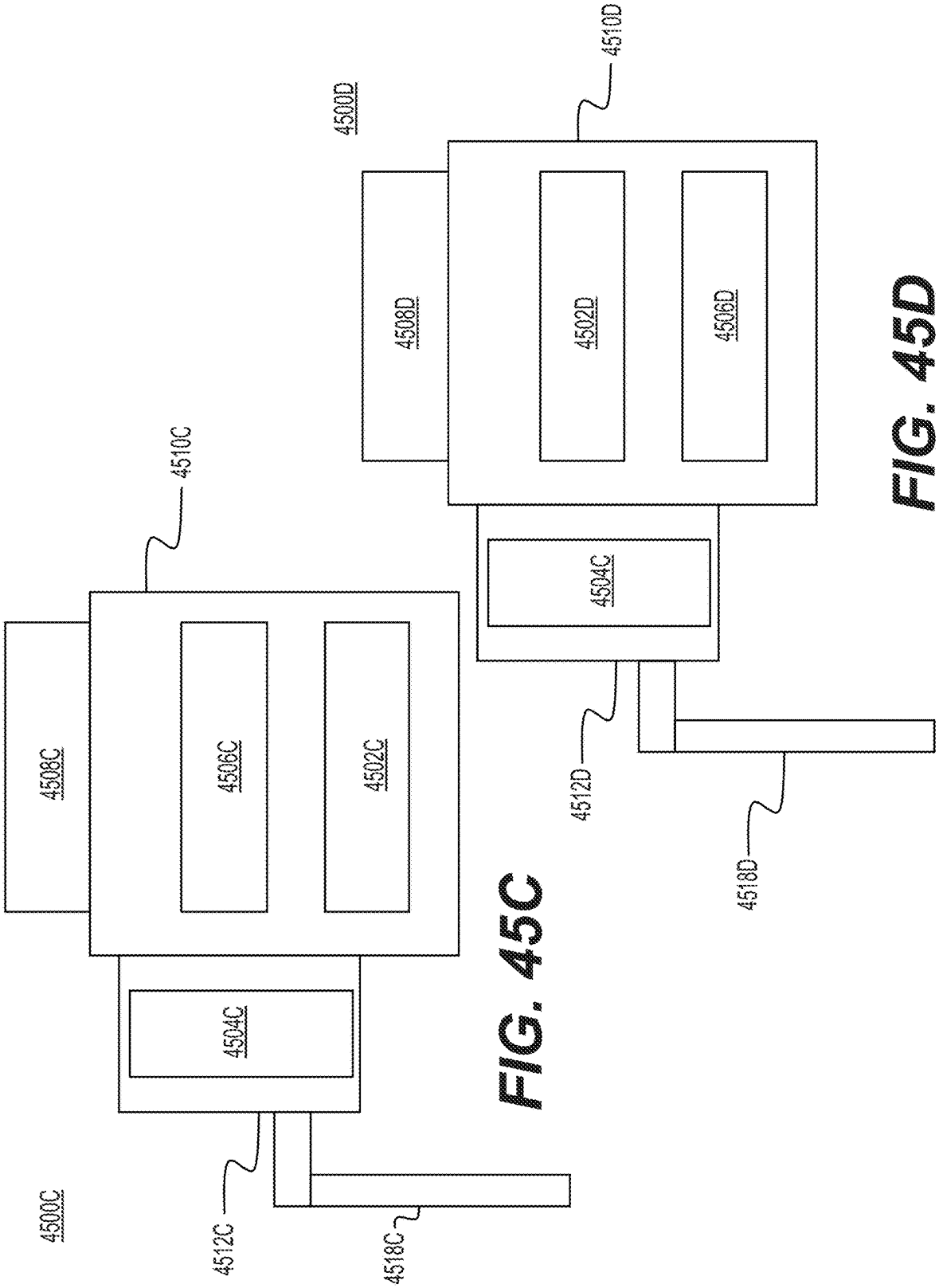

FIG. 45C

FIG. 45D

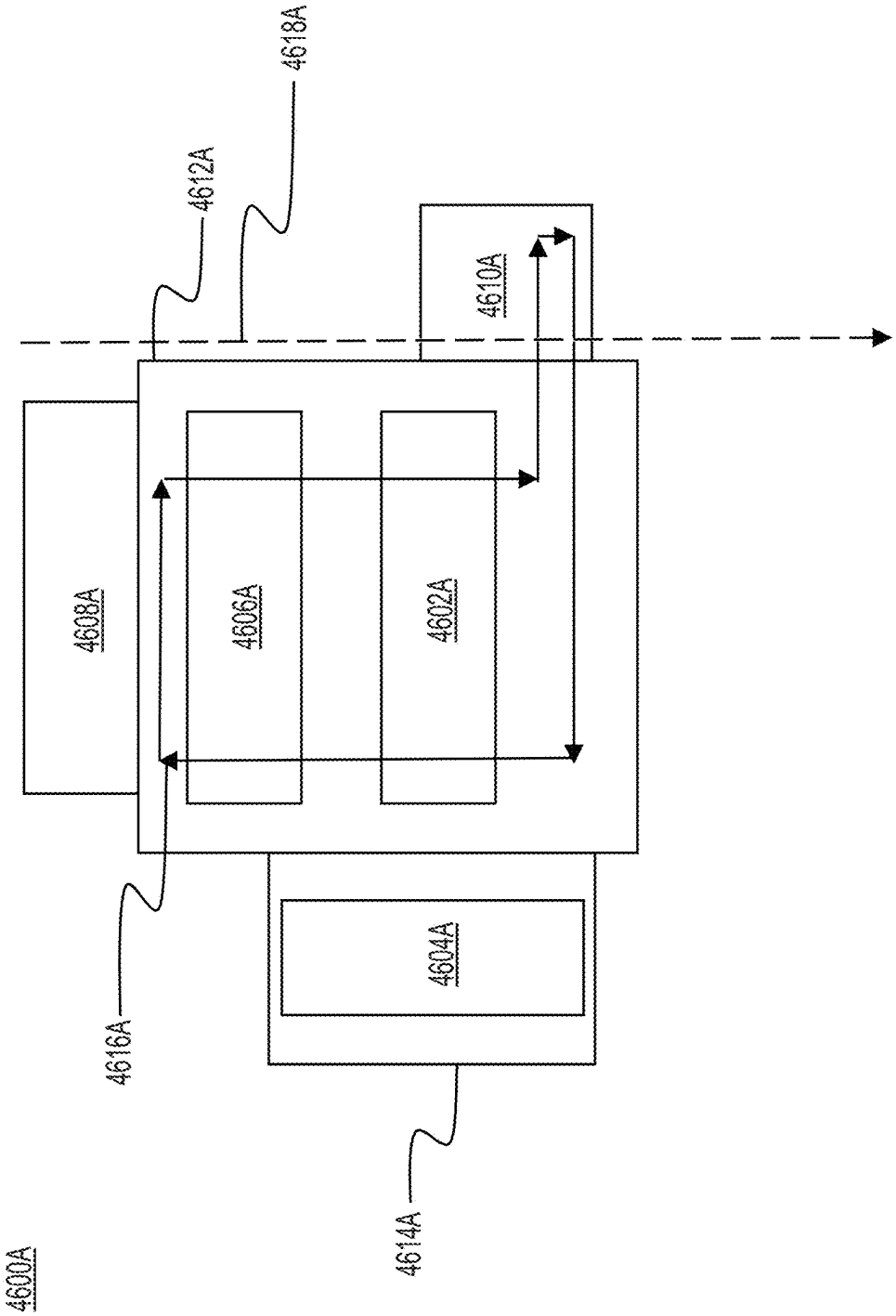
4600A
4608A
4606A
4602A
4604A
4610A
4612A
4614A
4616A
4618A

FIG. 46A

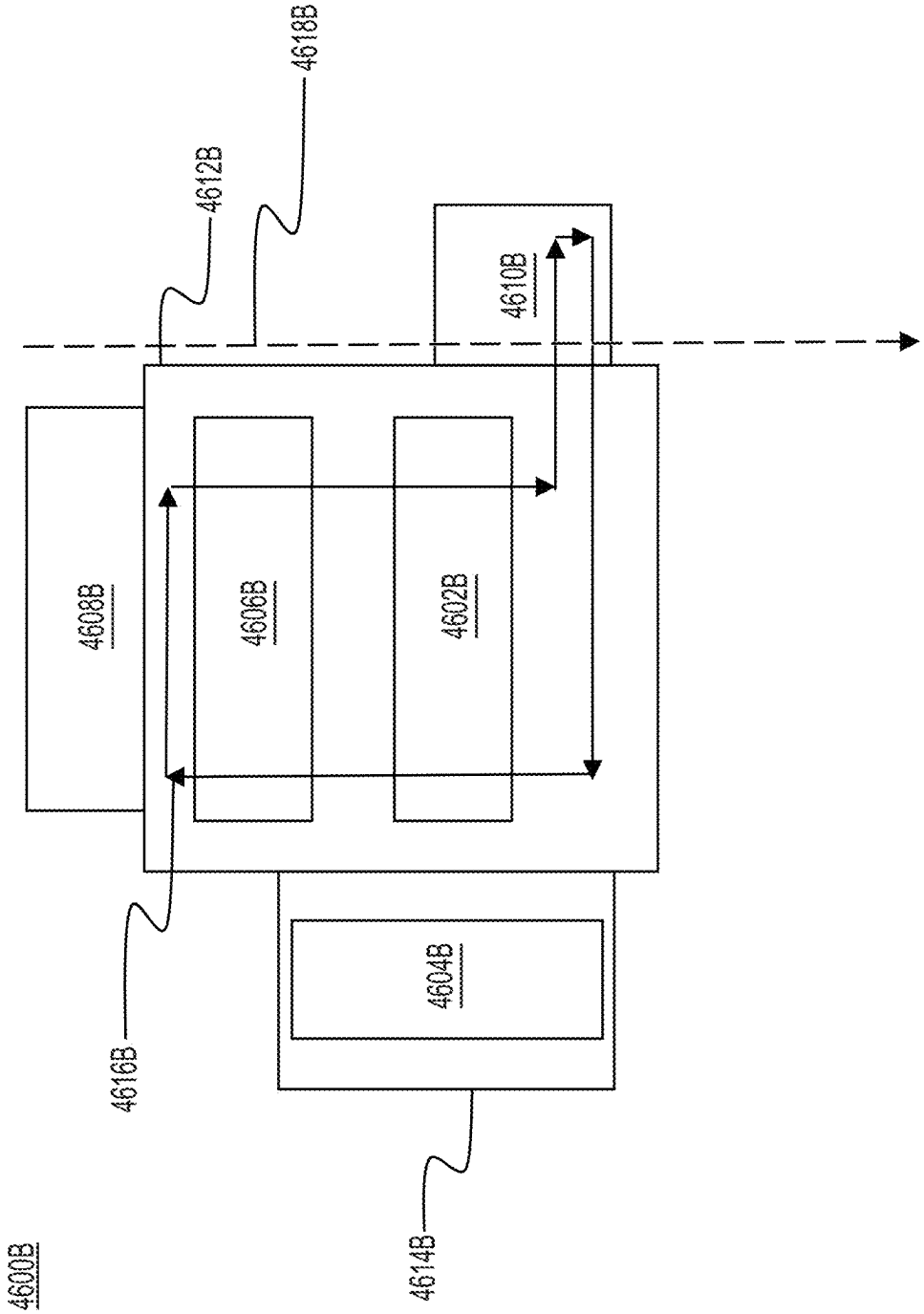
4600B
4608B
4606B
4602B
4610B
4604B
4612B
4618B
4616B
4614B

FIG. 46B

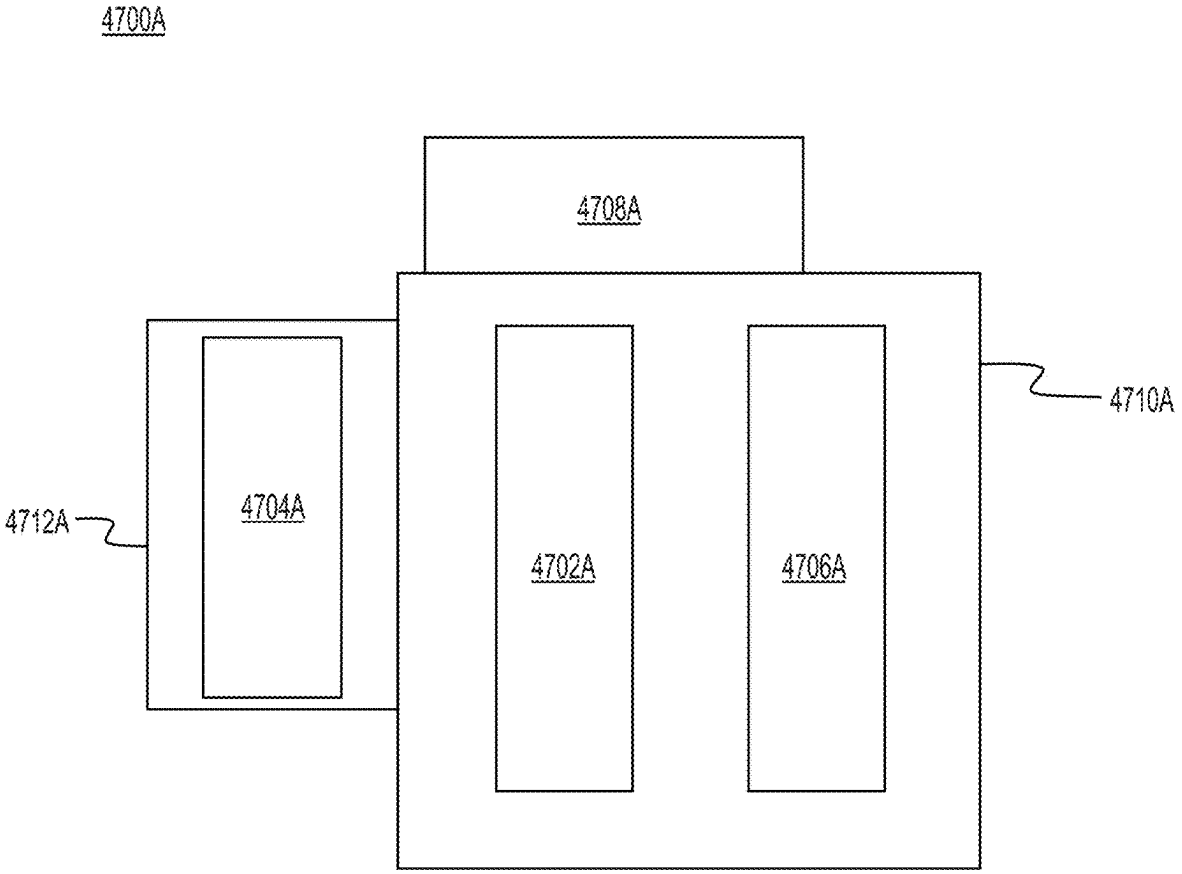

FIG. 47A

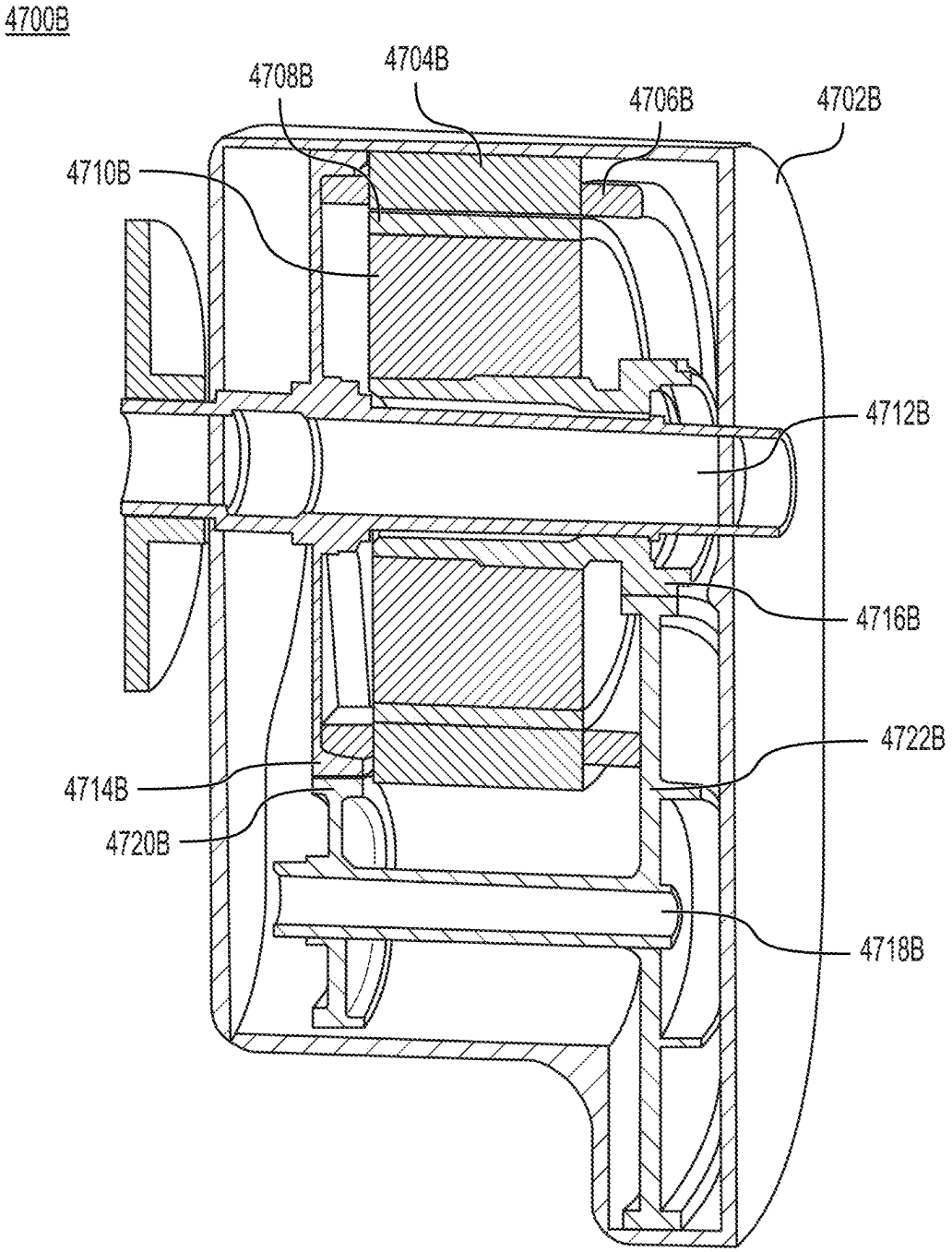
4700B
4708B
4704B
4706B
4702B
4710B
4712B
4716B
4722B
4714B
4720B
4718B

FIG. 47B

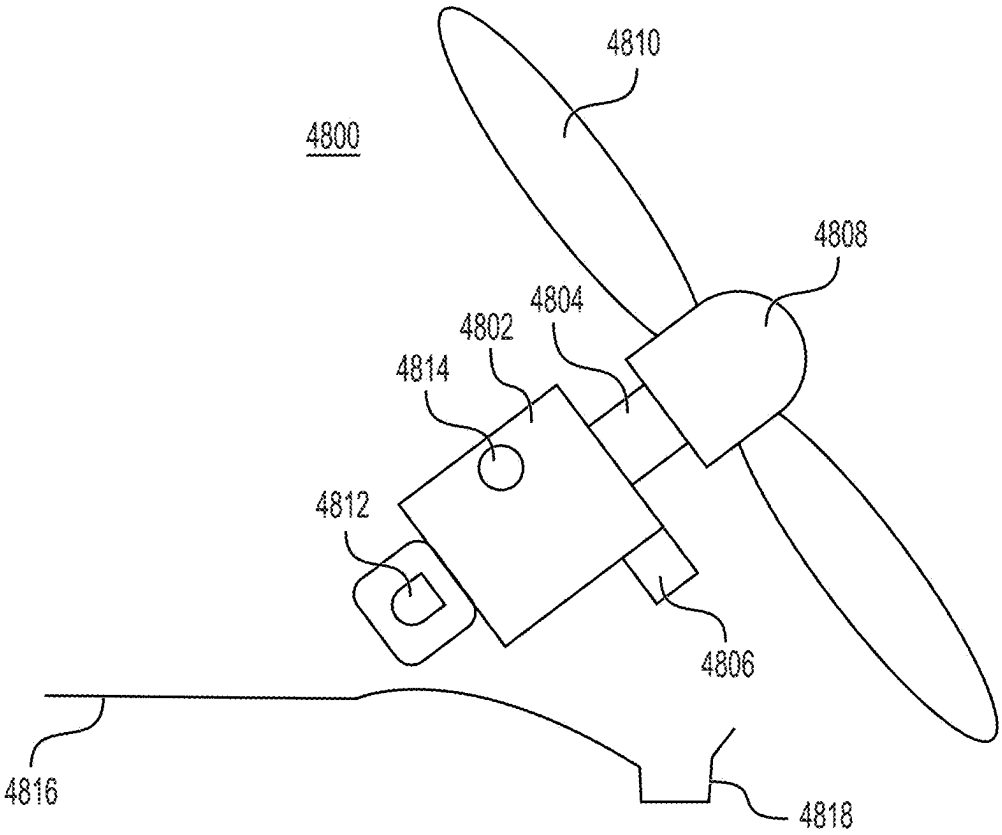

FIG. 48

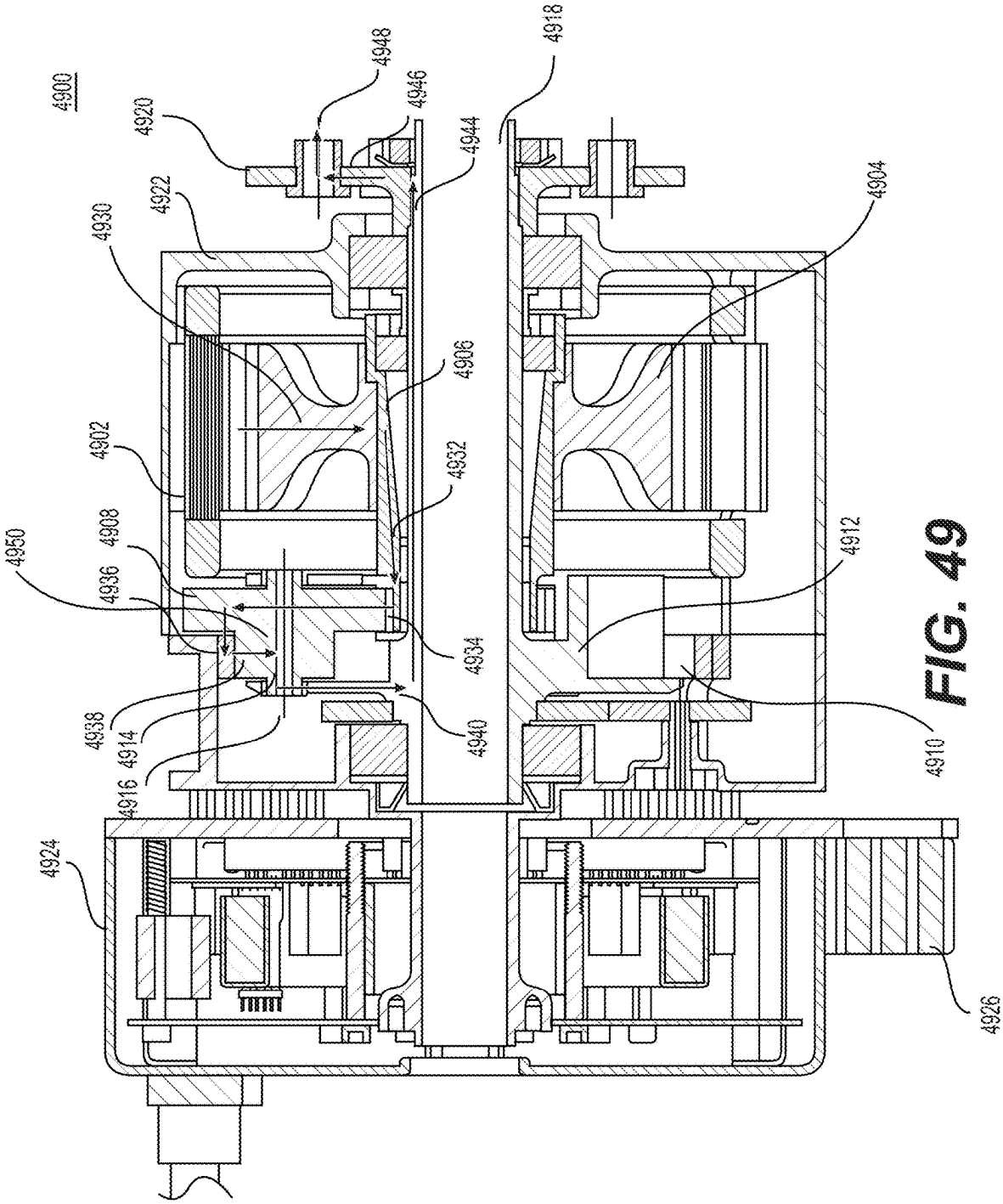
4900
4920
4948
4946
4944
4918
4922
4930
4904
4906
4902
4932
4908
4950
4936
4912
4934
4938
4914
4940
4910
4916
4924
4926

FIG. 49

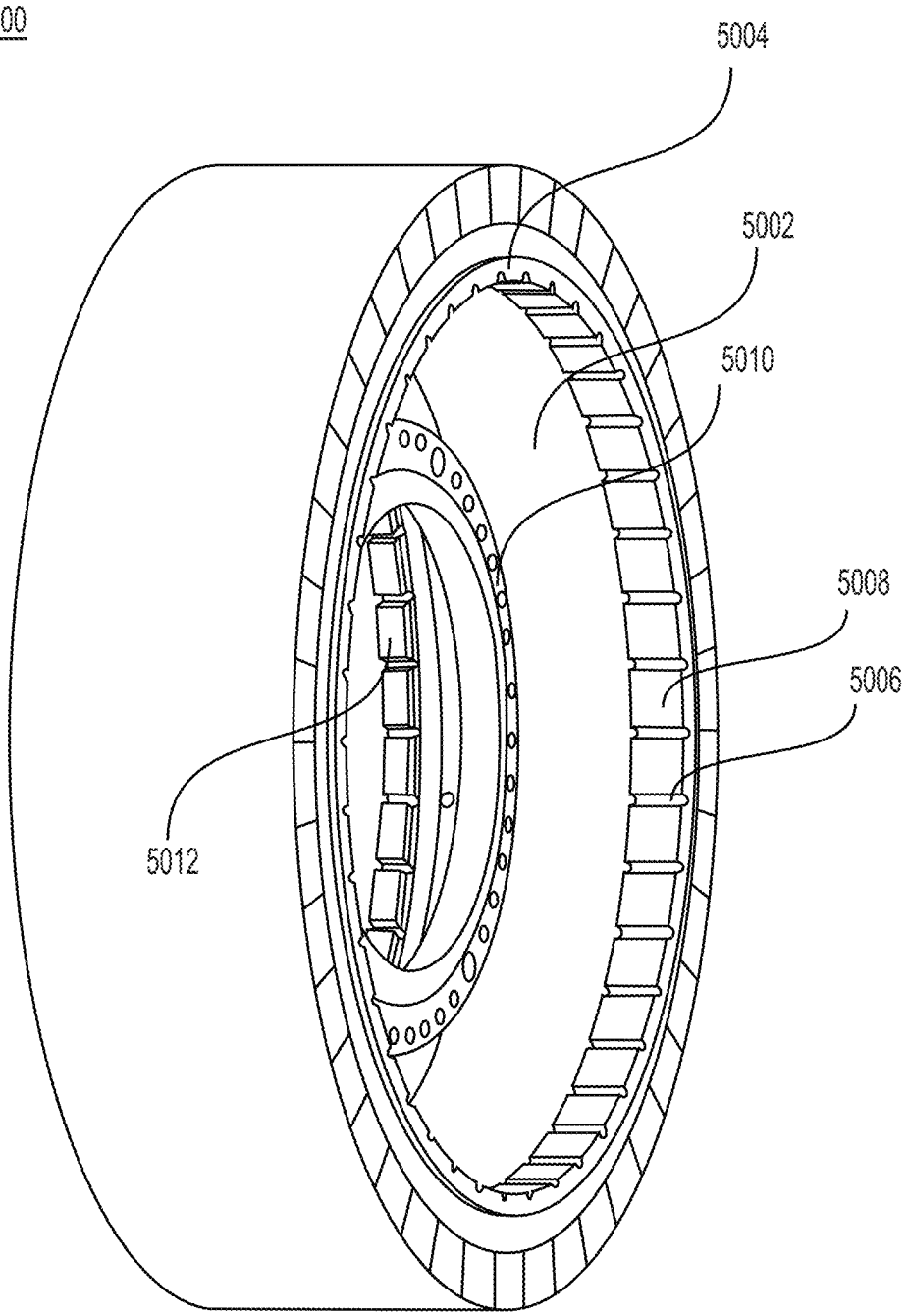

FIG. 50

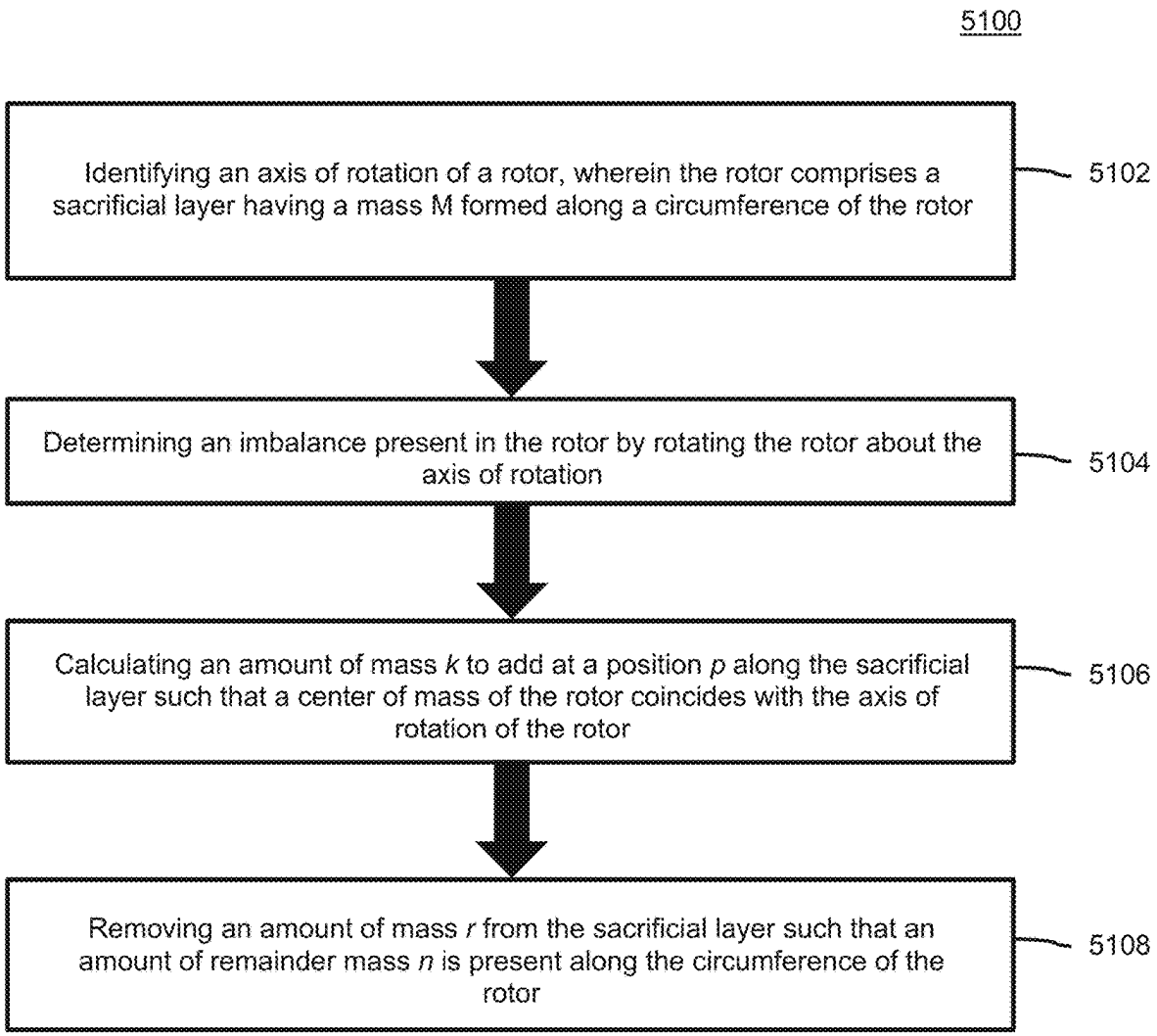
5100
Identifying an axis of rotation of a rotor, wherein the rotor comprises a sacrificial layer having a mass M formed along a circumference of the rotor
5102
Determining an imbalance present in the rotor by rotating the rotor about the axis of rotation
5104
Calculating an amount of mass k to add at a position p along the sacrificial layer such that a center of mass of the rotor coincides with the axis of rotation of the rotor
5106
Removing an amount of mass r from the sacrificial layer such that an amount of remainder mass n is present along the circumference of the rotor
5108

FIG. 51

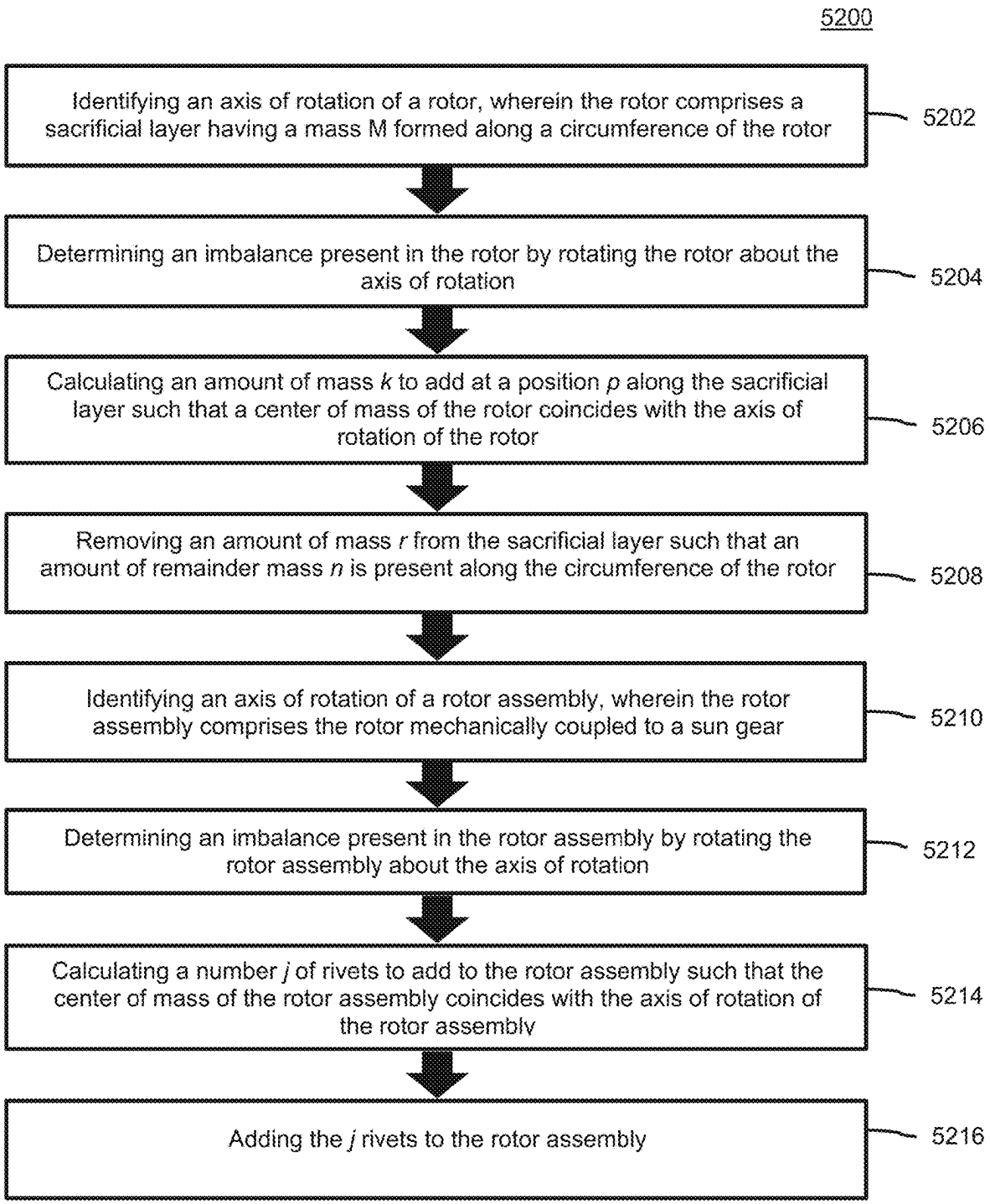
5200
Identifying an axis of rotation of a rotor, wherein the rotor comprises a sacrificial layer having a mass M formed along a circumference of the rotor
5202
Determining an imbalance present in the rotor by rotating the rotor about the axis of rotation
5204
Calculating an amount of mass k to add at a position p along the sacrificial layer such that a center of mass of the rotor coincides with the axis of rotation of the rotor
5206
Removing an amount of mass r from the sacrificial layer such that an amount of remainder mass n is present along the circumference of the rotor
5208
Identifying an axis of rotation of a rotor assembly, wherein the rotor assembly comprises the rotor mechanically coupled to a sun gear
5210
Determining an imbalance present in the rotor assembly by rotating the rotor assembly about the axis of rotation
5212
Calculating a number j of rivets to add to the rotor assembly such that the center of mass of the rotor assembly coincides with the axis of rotation of the rotor assembly
5214
Adding the j rivets to the rotor assembly
5216

FIG. 52

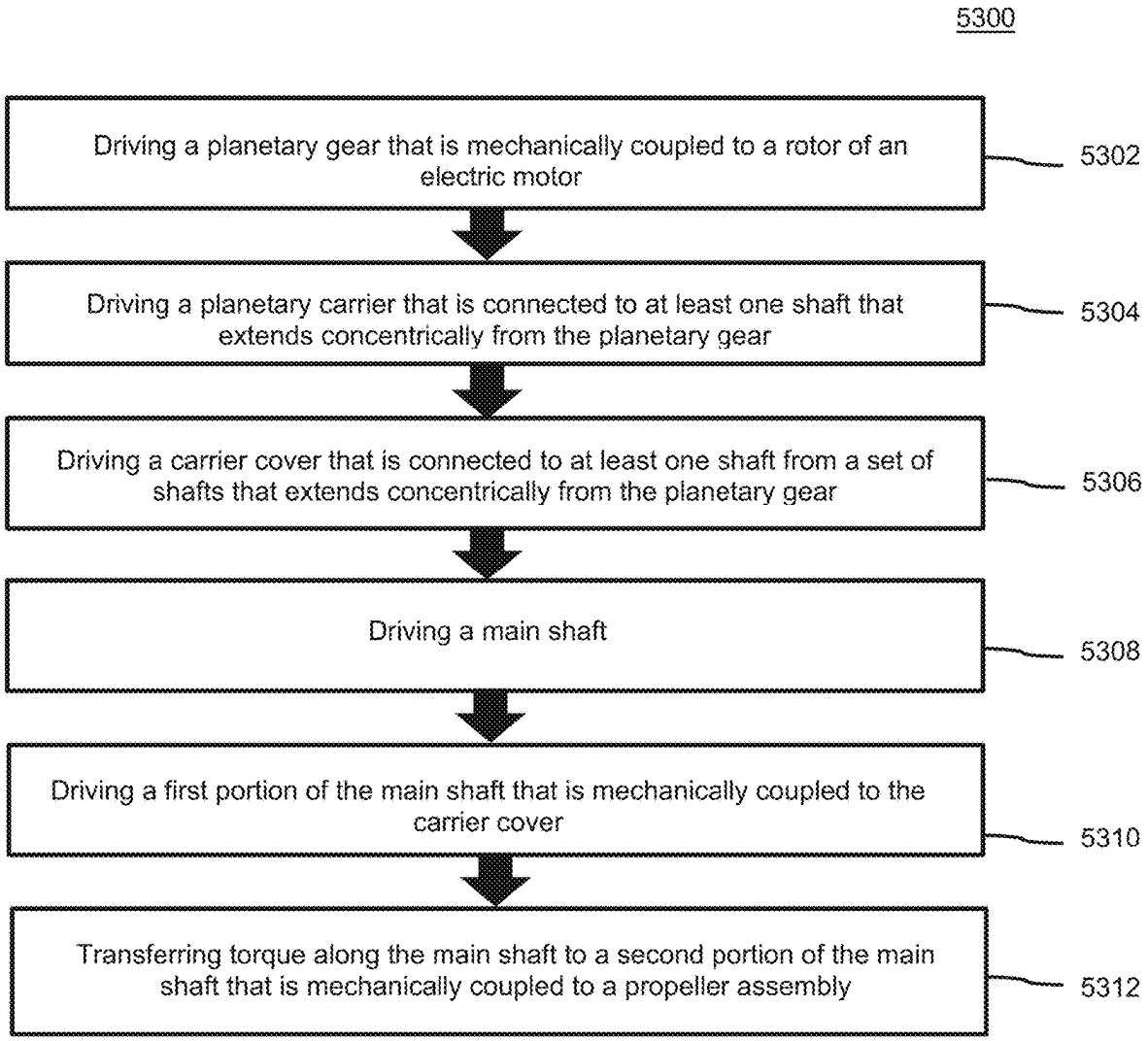
5300
Driving a planetary gear that is mechanically coupled to a rotor of an electric motor
5302
Driving a planetary carrier that is connected to at least one shaft that extends concentrically from the planetary gear
5304
Driving a carrier cover that is connected to at least one shaft from a set of shafts that extends concentrically from the planetary gear
5306
Driving a main shaft
5308
Driving a first portion of the main shaft that is mechanically coupled to the carrier cover
5310
Transferring torque along the main shaft to a second portion of the main shaft that is mechanically coupled to a propeller assembly
5312

FIG. 53

SYSTEMS AND METHODS FOR IMPROVED GEARBOXES FOR EVTOL AIRCRAFT

This disclosure is a continuation of U.S. patent application Ser. No. 18/526,524, titled "Systems and Methods for Improved Gearboxes for eVTOL Aircraft", filed on Dec. 1 2023, which is a continuation of U.S. patent application Ser. No. 18/148,688, titled "Systems and Methods for Improved Gearboxes for eVTOL Aircraft", filed on Dec. 30, 2022, which claims priority to U.S. Provisional Application No. 63/378,536, titled "Tilt Rotor Systems and Methods for eVTOL Aircraft," filed Oct. 6, 2022, and U.S. Provisional Application No. 63/378,680, titled "Systems and Methods for Improved Propulsion Systems for e VTOL Aircraft," filed Oct. 7, 2022. The disclosures of the above-identified applications are expressly incorporated herein by reference in their entireties.

TECHNICAL FIELD

This disclosure relates generally to the field of powered aerial vehicles. More particularly, and without limitation, the present disclosure relates to innovations in aircrafts driven by electric propulsion systems. Certain aspects of the present disclosure generally relate to improvements in electric engines that may be used in aircrafts driven by electric propulsion systems and in other types of vehicles. Other aspects of the present disclosure generally relate to improvements in gearboxes that provide particular advantages in aerial vehicles and may be used in other types of vehicles.

SUMMARY

The present disclosure addresses systems, components, and techniques primarily for use in a non-conventional aircraft driven by an electric propulsion system. For example, the tilt-rotor aircraft of the present disclosure may be configured for frequent (e.g., over 50 flights per work day), short-duration flights (e.g., less than 100 miles per flight) over, into, and out of densely populated regions. The aircraft may be configured to carry 4-6 passengers or commuters who have an expectation of a comfortable experience with low noise and low vibration. Accordingly, it may be desired that components of the aircraft are configured and designed to withstand frequent use without wearing, generate less heat and vibration, and that the aircraft include mechanisms to effectively control and manage heat or vibration generated by the components. Further, it may be intended that several of these aircraft operate near each other over a crowded metropolitan area. Accordingly, it may be desired that their components are configured and designed to generate low levels of noise interior and exterior to the aircraft, and to have a variety of safety and backup mechanisms. For example, it may be desired for safety reasons that the aircraft be propelled by a distributed propulsion system, avoiding the risk of a single point of failure, and that they are capable of conventional takeoff and landing on a runway. Moreover, it may be desired that the aircraft can safely vertically takeoff and land from and into relatively small or restricted spaces compared to traditional airport runways (e.g., vertiports, parking lots, or driveways) while transporting several passengers or commuters with accompanying baggage. These use requirements may place design constraints on aircraft size, weight, operating efficiency (e.g., drag, energy use), which may impact the design and configuration of the aircraft components.

Disclosed embodiments provide new and improved configurations of aircraft components that are not observed in conventional aircraft, and/or identified design criteria for components that differ from those of conventional aircraft. Such alternate configurations and design criteria, in combination addressing drawbacks and challenges with conventional components, yielded the embodiments disclosed herein for various configurations and designs of components for an aircraft driven by an electric propulsion system.

In some embodiments, the aircraft driven by an electric propulsion system of the present disclosure may be designed to be capable of both vertical and conventional takeoff and landing, with a distributed electric propulsion system enabling vertical flight, horizontal and lateral flight, and transition. Thrust may be generated by supplying high voltage electrical power to a plurality of electric engines of the distributed electric propulsion system, which may include the necessary components to convert the high voltage electrical power into mechanical shaft power to rotate a propeller. Embodiments disclosed herein may involve optimizing the energy density of the electric propulsion system. Embodiments may include an electric engine connected to an onboard electrical power source, which may include a device capable of storing energy such as a battery or capacitor, and may include one or more systems for harnessing or generating electricity such as a fuel powered generator or solar panel array. Some disclosed embodiments provide for weight reduction and space reduction of components in the aircraft to, increase aircraft efficiency and performance. Disclosed embodiments also improve upon safety in passenger transportation using new and improved safety protocols and system redundancy in the case of a failure, to minimize any single points of failure in the aircraft propulsion system. Some disclosed embodiments also provide new and improved approaches to satisfying and exceeding aviation and transportation laws and regulations. For example, the Federal Aviation Administration enforces federal laws and regulations requiring safety components such as fire protective barriers adjacent to engines that use more than a threshold amount of oil or other flammable materials. A fire protective barrier may include an engine component or aircraft component designed, constructed, or installed with the primary purpose of being constructed so that no hazardous quantity of air, fluid, or flame can pass around or through the fire protective barrier and/or to protect against corrosion. In some embodiments, a fire protective barrier may include a component separate from additional components as recited herein. Persons of ordinary skill in the art would understand which components within an aircraft, including within an electric propulsion system, would act with the primary function of being a fire protective barrier. In some embodiments, a fire protective barrier may include a firewall, a fireproof barrier, a fire resistant barrier, a flame resistant barrier, or any other barrier capable of ensuring no hazardous quantity of air, fluid, or flame can pass around or through the barrier and/or to protect against corrosion. For example, while a fuselage may be constructed so that no hazardous quantity of air, fluid, or flame can pass around or through the fire protective barrier, and/or protect against corrosion, the fuselage may not be considered a fire protective barrier since the primary purpose of a fuselage is not to be a fire protective barrier. In some embodiments, electric propulsion systems provide for efficient and effective lubrication and cooling using less than the threshold level of oil, yielding an aircraft that does not require engine fire protective barriers, saving on aircraft weight while maximizing performance and efficiency.

In some embodiments, the distributed electric propulsion system may include twelve electric engines, which may be mounted on booms forward and aft of the main wings of the aircraft. A subset of the electric engines, such as those mounted forward of the main wings, may be tiltable mid-flight between a horizontally oriented position (e.g., to generate forward thrust for cruising) and a vertically oriented position (e.g., to generate vertical lift for takeoff, landing, and hovering). The propellers of the forward electric engines may rotate in a clockwise or counterclockwise direction. Propellers may counter-rotate with respect to adjacent propellers. The aft electric engines may be fixed in a vertically oriented position (e.g., to generate vertical lift). The propellers may also rotate in a clockwise or counter-clockwise direction. In some embodiments, the difference in rotation direction may be achieved using the direction of engine rotation. In other embodiments, the engines may all rotate in the same direction, and gearing may be used to achieve different propeller rotation directions

In some embodiments, an aircraft may possess quantities of electric engines in various combinations of forward and aft engine configurations. For example, an aircraft may possess six forward and six aft electric engines, four forward and four aft electric engines, or any other combination of forward and aft engines, including embodiments where the number of forward electric engines and aft electric engines are not equivalent.

In some embodiments, for a vertical takeoff and landing (VTOL) mission, the forward and aft electric engines may provide vertical thrust during takeoff and landing. During flight phases where the aircraft is moving forward, the forward electric engines may provide horizontal thrust, while the propellers of the aft electric engines may be stowed at a fixed position in order to minimize drag. The aft electric engines may be actively stowed with position monitoring. Transition from vertical flight to horizontal flight and vice-versa may be accomplished via the tilt propeller subsystem. The tilt propeller subsystem may redirect thrust between a primarily vertical direction during vertical flight mode to a horizontal or near-horizontal direction during a forward-flight cruising phase. A variable pitch mechanism may change the forward electric engine's propeller-hub assembly blade collective angles for operation during the hover-phase, transition phase, and cruise-phase.

In some embodiments, in a conventional takeoff and landing (CTOL) mission, the forward electric engines may provide horizontal thrust for wing-borne take-off, cruise, and landing, and the wings may provide vertical lift. In some embodiments, the aft electric engines may not be used for generating thrust during a CTOL mission and the aft propellers may be stowed in place. In other embodiments, the aft electrical engines may be used at reduced power to shorten the length of the CTOL takeoff or landing.

In some embodiments, an electric engine for a vertical takeoff-and-landing aircraft may comprise an electric motor assembly including a stator and a rotor. Some embodiments may include an electric engine comprising an inverter assembly and a gearbox assembly including a sun gear. In some embodiments, an electric engine may include a main shaft including a length of the main shaft that extends from a first end of the main shaft through the gearbox assembly and through the electric motor assembly to a second end of the main shaft. In some embodiments, an electric engine may include a hydrodynamic bearing located between the main shaft and sun gear, and a bearing including an inner race mechanically coupled to the main shaft and an outer race mechanically coupled to the rotor. Some embodiments may include a bearing including an outer race mechanically coupled to an inner surface of the rotor.

BRIEF DESCRIPTIONS OF FIGURES

FIG. **1** is an illustration of a perspective view of an exemplary VTOL aircraft, consistent with disclosed embodiments.

FIG. **2** is another illustration of a perspective view of an exemplary VTOL aircraft in an alternative configuration, consistent with embodiments of the present disclosure.

FIG. **3** is an illustration of a top plan view of an exemplary VTOL aircraft, consistent with embodiments of the present disclosure.

FIG. **4** is a schematic diagram illustrating exemplary propeller rotation of a VTOL aircraft, consistent with disclosed embodiments.

FIG. **5** is a schematic diagram illustrating exemplary power connections in a VTOL aircraft, consistent with disclosed embodiments.

FIG. **6** is a block diagram illustrating an exemplary architecture and design of an electric propulsion unit of a VTOL aircraft, consistent with disclosed embodiments.

FIG. **7** is a schematic diagram illustrating an exemplary tilt electric propulsion system of a VTOL aircraft, consistent with disclosed embodiments.

FIGS. **8**A-C are illustrations of an exemplary tilt electric propulsion system of a VTOL aircraft, consistent with disclosed embodiments.

FIG. **9** is a schematic diagram illustrating an exemplary lift electric propulsion system of a VTOL aircraft, consistent with disclosed embodiments.

FIGS. **10**A-B are illustrations of an exemplary lift electric propulsion systems of a VTOL aircraft, consistent with disclosed embodiments.

FIGS. **11**A-C are cross-sectional illustrations of exemplary electric propulsion systems of a VTOL aircraft, consistent with disclosed embodiments.

FIGS. **12**A-D are illustrations and block diagrams of exemplary electric propulsion systems of a VTOL aircraft, consistent with disclosed embodiments.

FIG. **13** is an illustration of an exploded view of an exemplary electric propulsion system of a VTOL aircraft, consistent with disclosed embodiments.

FIG. **14** is an illustration of an exploded view of an exemplary electric motor assembly of a VTOL aircraft, consistent with disclosed embodiments.

FIGS. **15**A-C are illustrations of stator assemblies of a VTOL aircraft, consistent with disclosed embodiments.

FIGS. **16**A-B are illustrations of an exploded view and cross-section of rotor assemblies of a VTOL aircraft, consistent with disclosed embodiments.

FIG. **17** is an exploded view of a main shaft assembly of a VTOL aircraft, consistent with disclosed embodiments.

FIG. **18** is an illustration of an exemplary sun gear of a VTOL aircraft, consistent with disclosed embodiments.

FIG. **19** is an illustration of an exemplary ring gear of a VTOL aircraft, consistent with disclosed embodiments.

FIG. **20** is an illustration of an exemplary carrier assembly of a VTOL aircraft, consistent with disclosed embodiments.

FIGS. **21**A-B are illustrations of an exemplary end bell assembly of a VTOL aircraft, consistent with disclosed embodiments.

FIG. **22** is an illustration of an exemplary inverter assembly of a VTOL aircraft, consistent with disclosed embodiments.

FIG. **23** is an illustration of an exploded view of an inverter assembly of a VTOL aircraft, consistent with disclosed embodiments.

FIG. **24** is an illustration of an exemplary printed circuit board assembly of a VTOL aircraft, consistent with disclosed embodiments.

FIGS. **25**A-C are illustrations and exemplary front views of a heat exchanger of a VTOL aircraft, consistent with disclosed embodiments.

FIG. **26** is an illustration of a heat exchanger of a VTOL aircraft, consistent with disclosed embodiments.

FIG. **27**A-B are illustrations of a divider plate of a VTOL aircraft, consistent with disclosed embodiments.

FIG. **28** is an illustration of a thermal plate of a VTOL aircraft, consistent with disclosed embodiments.

FIG. **29** is an illustration of an electric propulsion system of a VTOL aircraft, consistent with disclosed embodiments.

FIGS. **30**A-B are illustrations of exemplary electric propulsion systems of a VTOL aircraft, consistent with disclosed embodiments.

FIGS. **31**A-B are cross-sectional illustrations of electric propulsion systems of a VTOL aircraft, consistent with disclosed embodiments.

FIGS. **32**A-D are cross-sectional illustrations of electric propulsion systems of a VTOL aircraft in various flight phases, consistent with disclosed embodiments.

FIGS. **33**A-C are schematic diagrams illustrating exemplary electric propulsion systems of a VTOL aircraft comprising fire protective barriers, consistent with disclosed embodiments.

FIGS. **34**A-D are schematic diagrams illustrating exemplary electric propulsion systems of a VTOL aircraft, consistent with disclosed embodiments.

FIG. **35** is a schematic diagram illustrating an exemplary electric propulsion system of a VTOL aircraft, consistent with disclosed embodiments.

FIGS. **36**A-B are schematic diagrams illustrating exemplary electric propulsion systems of a VTOL aircraft, consistent with disclosed embodiments.

FIG. **35** is a schematic diagram illustrating an exemplary electric propulsion system of a VTOL aircraft, consistent with disclosed embodiments.

FIGS. **38**A-B are schematic diagrams illustrating an exemplary electric propulsion system of a VTOL aircraft and an exemplary inverter assembly of an electric propulsion system, consistent with disclosed embodiments.

FIGS. **39**A-D are cross-sectional and perspective illustrations and schematic diagrams illustrating exemplary electric propulsion systems of a VTOL aircraft, consistent with disclosed embodiments.

FIGS. **40**A-D are illustrations and schematic diagrams illustrating of electric propulsion systems of a VTOL aircraft, consistent with disclosed embodiments.

FIG. **41** is a cross-sectional illustration of an electric propulsion system of a VTOL aircraft, consistent with disclosed embodiments.

FIGS. **42**A-B are illustrations of exemplary electric propulsion systems of a VTOL aircraft, consistent with disclosed embodiments.

FIGS. **43**A-D are illustrations and schematic diagrams illustrating exemplary electric propulsion systems of a VTOL aircraft, consistent with disclosed embodiments.

FIGS. **44**A-C are schematic diagrams illustrating exemplary electric propulsion systems of a VTOL aircraft, consistent with disclosed embodiments.

FIGS. **45**A-D are schematic diagrams illustrating exemplary electric propulsion systems of a VTOL aircraft, consistent with disclosed embodiments.

FIGS. **46**A-B are schematic diagrams illustrating exemplary electric propulsion systems of a VTOL aircraft, consistent with disclosed embodiments.

FIGS. **47**A-B are schematic diagrams and a cross-sectional illustration of exemplary electric propulsion systems of a VTOL aircraft, consistent with disclosed embodiments.

FIG. **48** is a schematic diagram illustrating an exemplary electric propulsion system of a VTOL aircraft, consistent with disclosed embodiments.

FIG. **49** is an illustration of a cross sectional view of an exemplary electric propulsion system of a VTOL aircraft, consistent with disclosed embodiments.

FIG. **50** is an illustration of a perspective view of an exemplary rotor of a VTOL aircraft, consistent with disclosed embodiments.

FIG. **51** is a flow chart of an exemplary process for balancing a rotor of a VTOL aircraft, consistent with disclosed embodiments.

FIG. **52** is another flow chart of an exemplary process for balancing a rotor assembly of a VTOL aircraft, consistent with disclosed embodiments.

FIG. **53** is a flow chart of an exemplary process for transmitting torque from an electric motor assembly to a propeller assembly of a VTOL aircraft, consistent with disclosed embodiments.

DETAILED DESCRIPTION

The disclosed embodiments provide systems, subsystems, and components for new VTOL aircraft having various combinations of an electric propulsion system and cooling systems that maximize performance while minimizing weight.

In some embodiments, an electric propulsion system as described herein may generate thrust by supplying High Voltage (HV) electric power to an electric engine, which in turn converts HV power into mechanical shaft power which is used to rotate a propeller. An aircraft as described herein may include multiple electric engines mounted forward and aft of the wing. The engines may be mounted directly to the wing, or mounted to one or more booms attached to the wing. The amount of thrust each electric engine generates may be governed by a torque command from a Flight Control System (FCS) over a digital communication interface to each electric engine. Embodiments may include forward electric engines that are capable of altering their orientation, or tilt. Some embodiments include forward engines that may be a clockwise (CW) type or counterclockwise (CCW) type. The forward electric propulsion subsystem may consist of a multi-blade adjustable pitch propeller, as well as a variable pitch subsystem.

In some embodiments, an aircraft may include aft electric engines, or lifters, that can be of a clockwise (CW) type or counterclockwise (CCW) type. Some embodiments may include aft electric engines that utilize a multi-blade fixed pitch propeller.

As described herein, the orientation and use of the electric propulsion system components may change throughout the operation of the aircraft. In some embodiments, during vertical takeoff and landing, the forward propulsion systems as well as aft propulsion systems may provide vertical thrust during takeoff and landing. During the flight phases where the aircraft is in forward flight-mode, the forward propulsion systems may provide horizontal thrust, while the aft propul-

sion system propellers may be stowed at a fixed position to minimize drag. The aft electric propulsion systems may be actively stowed with position monitoring. Some embodiments may include a transition from vertical flight to horizontal flight and vice-versa. In some embodiments, the transitions may be accomplished via the Tilt Propeller System (TPS). The TPS reorients the electric propulsion system between a primarily vertical direction during vertical flight mode to a mostly horizontal direction during forward-flight mode. Some embodiments may include a variable pitch mechanism that may change the forward propulsion system propeller blade collective angles for operation during the hover-phase, cruise-phase and transition phase. Some embodiments may include a Conventional Takeoff and Landing (CTOL) configurations such that the tilters provide horizontal thrust for wing-borne take-off, cruise and landing phases. In some embodiments, the aft electric engines are not used for generating thrust during a CTOL mission and the aft propellers are stowed in place to minimize drag.

In some embodiments, an electric engine as described herein may possess design features which mitigate and protect against uncontained fire, such as utilizing non-hazardous quantity of flammable fluid contained in both the tilt and lift engines. For example, in some embodiments, the electric engine may be configured to utilize less than one quart of oil or another flammable fluid. Some embodiments may include the electric engine containing a non-hazardous quantity of air such that any fire may not be capable of maintaining a duration capable of migrating to another portion of the aircraft. In some embodiments, the non-hazardous quantity of air may be in contact with flammable liquids throughout the electric engine. Some examples may include an electric engine possessing up to one liter, two liters, three liters, four liters, five liters, ten liters, or twenty liters of air within the electric engine housing. In some embodiments, the amount of air present within the electric engine housing may possess a fixed ratio to the amount of oil, or other liquid for cooling, present within the electric propulsion system. Such a ratio may be driven by a determination of the sufficient thermal mass needed to properly cool the electric propulsion system. Some embodiments may include a ratio of about 3:1 of air to oil present within the electric propulsion system. Some embodiments may include an electric engine housing where 75% of the open volume, that is, interior volume that is not occupied by components of the electric engine, is comprised of air while 25% of the open volume is comprised of oil or some other liquid for cooling and/or lubricating. Some embodiments may also be configured without a nominal ignition source within the electric engines, possess an engine over temperature operating limit that may be more than 50° C. less than a flammable fluid auto-ignition temperature, possess overtemperature detection and protection, overvoltage detection and protection, and/or possess overcurrent detection and protection. Further, some embodiments may include an electric propulsion system where the bulk temperature of the electric propulsion system is lower than the autoignition temperature and flashpoint of the oil, or other liquid, present within the electric propulsion system in all normal operating conditions. In some embodiments, non-normal conditions that raise the bulk electric propulsion system temperature may result in system responses that prevent the exceedance of the oil, or other liquid, flashpoint and autoignition temperature. In some embodiments, the ratio of air to oil, or other liquid, may be such that if a fire were to occur, including if an arc were to cause a fire, within the electric engine housing, the amount of air present within the electric engine housing would not allow the fire to propagate to other areas of the aircraft. In some embodiments, these and other design features may yield an electric engine that is deemed by one or more guidelines or regulations to not be a designated fire zone.

Reference will now be made in detail to exemplary embodiments, examples of which are illustrated in the accompanying drawings. The following description refers to the accompanying drawings in which the same numbers in different drawings represent the same or similar elements unless otherwise represented. The implementations set forth in the following description of exemplary embodiments do not represent all implementations consistent with the disclosure. Instead, they are merely examples of apparatuses and methods consistent with aspects related to the subject matter recited in the appended claims.

A. Exemplary Electric Aircraft Features

FIG. **1** is an illustration of a perspective view of an exemplary VTOL aircraft, consistent with disclosed embodiments. FIG. **2** is another illustration of a perspective view of an exemplary VTOL aircraft in an alternative configuration, consistent with embodiments of the present disclosure. FIGS. **1** and **2** illustrate a VTOL aircraft **100**, **200** in a cruise configuration and a vertical take-off, landing and hover configuration (also referred to herein as a "lift" configuration), respectively, consistent with embodiments of the present disclosure. Elements corresponding to FIGS. **1** and **2** may possess like numerals and refer to similar elements of the aircrafts **100**, **200**. The aircraft **100**, **200** may include a fuselage **102**, **202**, wings **104**, **204** mounted to the fuselage **102**, **202** and one or more rear stabilizers **106**, **206** mounted to the rear of the fuselage **102**, **202**. A plurality of lift propellers **112**, **212** may be mounted to wings **104**, **204** and may be configured to provide lift for vertical take-off, landing and hover. A plurality of tilt propellers **114**, **214** may be mounted to wings **104**, **204** and may be tiltable between the lift configuration in which they provide a portion of the lift required for vertical take-off, landing and hovering, as shown in FIG. **2**, and the cruise configuration in which they provide forward thrust to aircraft **100** for horizontal flight, as shown in FIG. **1**. As used herein, a tilt propeller lift configuration refers to any tilt propeller orientation in which the tilt propeller thrust is providing primarily lift to the aircraft and tilt propeller cruise configuration refers to any tilt propeller orientation in which the tilt propeller thrust is providing primarily forward thrust to the aircraft.

In some embodiments, lift propellers **112**, **212** may be configured for providing lift only, with all horizontal propulsion being provided by the tilt propellers. Accordingly, lift propellers **112**, **212** may be configured with fixed positions and may only generate thrust during take-off, landing and hover phases of flight. Meanwhile, tilt propellers **114**, **214** may be tilted upward into a lift configuration in which thrust from propellers **114**, **214** is directed downward to provide additional lift.

For forward flight, tilt propellers **114**, **214** may tilt from their lift configurations to their cruise configurations. In other words, the orientation of tilt propellers **114**, **214** may be varied from an orientation in which the tilt propeller thrust is directed downward (to provide lift during vertical take-off, landing and hover) to an orientation in which the tilt propeller thrust is directed rearward (to provide forward thrust to aircraft **100**, **200**). The tilt propellers assembly for a particular electric engine may tilt about an axis of rotation defined by a mounting point connecting the boom and the electric engine. When the aircraft **100**, **200** is in full forward flight, lift may be provided entirely by wings **104**, **204**.

Meanwhile, in the cruise configuration, lift propellers **112**, **212** may be shut off. The blades **120**, **220** of lift propellers **112**, **212** may be held in low-drag positions for aircraft cruising. In some embodiments, lift propellers **112**, **212** may each have two blades **120**, **220** that may be locked for cruising in minimum drag positions in which one blade is directly in front of the other blade as illustrated in FIG. **1**. In some embodiments, lift propellers **112**, **212** have more than two blades. In some embodiments, tilt propellers **114**, **214** may include more blades **116**, **216** than lift propellers **112**, **212**. For example, as illustrated in FIGS. **1** and **2**, lift propellers **112**, **212** may each include, e.g., two blades, whereas and tilt propellers **114**, **214** may each include more blades, such as the five blades shown. In some embodiments, each of the tilt propellers **114**, **214** may have 2 to 5 blades, and possibly more depending on the design considerations and requirements of the aircraft.

In some embodiments, the aircraft may include a single wing **104**, **204** on each side of fuselage **102**, **202** (or a single wing that extends across the entire aircraft). At least a portion of lift propellers **112**, **212** may be located rearward of wings **104**, **204** and at least a portion of tilt propellers **114**, **214** may be located forward of wings **104**, **204**. In some embodiments, all of lift propellers **112**, **212** may be located rearward of wings **104**, **204** and all of tilt propellers **114**, **214** may be located forward of wings **104**, **204**. According to some embodiments, all lift propellers **112**, **212** and tilt propellers **114**, **214** may be mounted to the wings—i.e., no lift propellers or tilt propellers may be mounted to the fuselage. In some embodiments, lift propellers **112**, **212** may be all located rearwardly of wings **104**, **204** and tilt propellers **114**, **214** may be all located forward of wings **104**, **204**. According to some embodiments, all lift propellers **112**, **212** and tilt propellers **114**, **214** may be positioned inwardly of the ends of the wing **104**, **204**.

In some embodiments, lift propellers **112**, **212** and tilt propellers **114**, **214** may be mounted to wings **104**, **204** by booms **122**, **222**. Booms **122**, **222** may be mounted beneath wings **104**, **204**, on top of the wings, and/or may be integrated into the wing profile. In some embodiments, lift propellers **112**, **212** and tilt propellers **114**, **214** may be mounted directly to wings **104**, **204**. In some embodiments, one lift propeller **112**, **212** and one tilt propeller **114**, **214** may be mounted to each boom **122**, **222**. Lift propeller **112**, **212** may be mounted at a rear end of boom **122**, **222** and tilt propeller **114**, **214** may be mounted at a front end of boom **122**, **222**. In some embodiments, lift propeller **112**, **212** may be mounted in a fixed position on boom **122**, **222**. In some embodiments, tilt propeller **114**, **214** may mounted to a front end of boom **122**, **222** via a hinge. Tilt propeller **114**, **214** may be mounted to boom **122**, **222** such that tilt propeller **114**, **214** is aligned with the body of boom **122**, **222** when in its cruise configuration, forming a continuous extension of the front end of boom **122**, **222** that minimizes drag for forward flight.

In some embodiments, aircraft **100**, **200** may include, e.g., one wing on each side of fuselage **102**, **202** or a single wing that extends across the aircraft. According to some embodiments, the at least one wing **104**, **204** is a high wing mounted to an upper side of fuselage **102**, **202**. According to some embodiments, the wings include control surfaces, such as flaps and/or ailerons. According to some embodiments, wings **104**, **204** may have designed with a profile that reduces drag during forward flight. In some embodiments, the wing tip profile may be curved and/or tapered to minimize drag.

In some embodiments, rear stabilizers **106**, **206** include control surfaces, such as one or more rudders, one or more elevators, and/or one or more combined rudder-elevators. The wing(s) may have any suitable design. In some embodiments, the wings have a tapering leading edge.

In some embodiments, lift propellers **112**, **212** or tilt propellers **114**, **214** may canted relative to at least one other lift propeller **112**, **212** or tilt propeller **114**, **214**. As used herein, canting refers to a relative orientation of the rotational axis of the lift propeller/tilt propeller about a line that is parallel to the forward-rearward direction, analogous to the roll degree of freedom of the aircraft. Canting of the lift propellers and/or tilt propellers may help minimize damage from propeller burst by orienting a rotational plane of the lift propeller/tilt propeller discs (the blades plus the hub onto which the blades are mounted) so as to not intersect critical portions of the aircraft (such areas of the fuselage in which people may be positioned, critical flight control systems, batteries, adjacent propellers, etc.) or other propeller discs and may provide enhanced yaw control during flight.

FIG. **3** is an illustration of a top plane view of an exemplary VTOL aircraft, consistent with embodiments of the present disclosure. Aircraft **300** shown in the figure may be a top plan view of the aircraft **100**, **200** shown in FIGS. **1** and **2**, respectively. As discussed herein, an aircraft **300** may include twelve electric propulsion systems distributed across the aircraft **300**. In some embodiments, a distribution of electric propulsion systems may include six forward electric propulsion systems **314** and six aft electric propulsion systems **312** mounted on booms forward and aft of the main wings **304** of the aircraft **300**. In some embodiments, a length of the rear end of the boom **324** from the wing **304** to the lift propeller **312** may comprise a similar rear end of the boom **324** length across the numerous rear ends of the booms. In some embodiments, the length of the rear ends of the booms may vary across the, exemplary, six rear ends of the booms. For example, each rear end of the boom **324** may comprise a different length from the wing **304** to the lift propeller **312**, or a subset of rear ends of booms may be similar in length. In some embodiments, a front end of boom **322** may comprise various lengths from the wing **304** to the tilt propeller **314** across the front ends of booms. For example, as shown in FIG. **3**, a length of the front end of boom **322** from the tilt propellers **314** nearest the fuselage to the wing **304** may comprise a greater length than the length of the front end of the boom **322** from the wing **304** to the tilt propellers **314** furthest from the fuselage. Some embodiments may include front ends of the booms with similar lengths across the, exemplary, six front ends of booms or any other distribution of lengths of the front ends of booms from the wing **304** to tilt propellers **314**. Some embodiments may include an aircraft **300** possessing eight electric propulsion systems with four forward electric propulsion systems **314** and four aft electric propulsion systems **312**, or any other distribution of forward and aft electric propulsion systems, including embodiments where the number of forward electric propulsion systems **314** is less than or greater than the number of aft electric propulsion systems **312**. Further, FIG. **3** depicts an exemplary embodiment of a VTOL aircraft **300** with forward propellers **314** in a horizontal orientation for horizontal flight and aft propeller blades **320** in a stowed position for a forward phase of flight.

As disclosed herein, the forward electric propulsion systems and aft electric propulsion systems may be of a clockwise (CW) type or counterclockwise (CCW) type. Some embodiments may include various forward electric propulsion systems possessing a mixture of both CW and

CCW types. In some embodiments, the aft electric propulsion systems may possess a mixture of CW and CCW type systems among the aft electric propulsion systems.

FIG. **4** is a schematic diagram illustrating exemplary propeller rotation of a VTOL aircraft, consistent with disclosed embodiments. Aircraft **400** shown in the figure may be a top plan view of the aircraft **100**, **200**, and **300** shown in FIGS. **1**, **2**, and **3**, respectively. An aircraft **400** may include six forward electric propulsion systems with three of the forward electric propulsion systems being of CW type **424** and the remaining three forward electric propulsion systems being of CCW type. In some embodiments, three aft electric propulsion systems may be of CCW type **428** with the remaining three aft electric propulsion systems being of CW type **430**. Some embodiments may include an aircraft **400** possessing four forward electric propulsion systems and four aft electric propulsion systems, each with two CW types and two CCW types. In some embodiments, propellers may counter-rotate with respect to adjacent propellers to cancel torque steer, generated by the rotation of the propellers, experienced by the fuselage or wings of the aircraft. In some embodiments, the difference in rotation direction may be achieved using the direction of engine rotation. In other embodiments, the engines may all rotate in the same direction, and gearing may be used to achieve different propeller rotation directions.

Some embodiments may include an aircraft **400** possessing forward and aft electric propulsion systems where the amount of CW types **424** and CCW types **426** is not equal among the forward electric propulsion systems, among the aft electric propulsion systems, or among the forward and aft electric propulsion systems.

FIG. **5** is a schematic diagram illustrating exemplary power connections in a VTOL aircraft, consistent with disclosed embodiments. A VTOL aircraft may have various power systems connected to diagonally opposing electric propulsion systems. In some embodiments, the power systems may include high voltage power systems. Some embodiments may include high voltage power systems connected to electric engines via high voltage channels. In some embodiments, an aircraft **500** may include six power systems, including batteries **526**, **528**, **530**, **532**, **534**, and **536** stored within the wing **570** of the aircraft **500**. In some embodiments, the aircraft **500** may include six forward electric propulsion systems having six electric engines **502**, **504**, **506**, **508**, **510**, and **512** and six aft electric propulsion systems having six electric engines **514**, **516**, **518**, **520**, **522**, and **524**. In some embodiments, a battery may be connected to diagonally opposing electric engines. In such a configuration, first power system **526** may provide power to electric engines **502** via power connection channel **538** and electric engine **524** via power connection channel **540**. In some embodiments, first power system **526** may also be paired with a fourth power system **532** via a power connection channel **542** possessing a fuse to prevent excessive current from flowing through the power systems **526** and **532**. Further to this embodiment, VTOL aircraft **500** may include a second power system **528** paired with a fifth power system **534** via power connection channel **548** possessing a fuse and may provide power to electric engines **510** and **516** via power connection channels **544** and **546**, respectively. In some embodiments, a third power system **530** may be paired with a sixth power system **536** via power connection channel **554** possessing a fuse and may provide power to electric engines **506** and **520** via power connection channels **550** and **552**, respectively. The fourth power system **532** may also provide power to electric engines **508** and **518** via power connection channels **556** and **558**, respectively. The fifth power system **534** may also provide power to electric engines **504** and **522** via power connection channels **560** and **562**, respectively. The sixth power system **536** may also provide power to electric engines **512** and **514** via power connection channels **564** and **566**, respectively.

As disclosed herein, an electric propulsion system may include an electric engine connected to a High Voltage Power System, such as a battery, located within the aircraft, via high voltage channels or power connection channels. Some embodiments may include various batteries being stored within an aircraft wing with high voltage channels traveling throughout the aircraft, including the wing and boom, to an electric propulsion system. In some embodiments, multiple high voltage power systems may be used to create an electric propulsion system with multiple high voltage power supplies to avoid the risk of a single point of failure. In some embodiments, an aircraft may include multiple electric propulsion systems that may be wired in a pattern to various batteries or power sources stored throughout the aircraft. It is recognized that such a configuration may be beneficial as to avoid the risk of a single point of failure where one battery or power source failure could lead to a portion of the aircraft not being able to maintain a required amount of thrust to continue flight or perform a controlled landing. For example, if a VTOL possessed two forward electric propulsion systems and two aft propulsion systems, the forward and the aft electric propulsion systems on opposite sides of the VTOL aircraft may be connected to the same high voltage power system. In such a configuration, if one high voltage power system were to fail, a forward and an aft electric propulsion system on opposite sides of the VTOL aircraft would remain in working order and may provide a more balanced flight or landing compared to a forward and aft electric propulsion system failing on the same side of a VTOL aircraft. Some embodiments may include four forward electric propulsion systems and four aft electric propulsion systems where diagonally opposing electric engines are connected to a common battery or power source. Some embodiments may include various configurations of electric engines electrically connected to high voltage power systems such that a risk of a single point of failure is avoided in the case of a power source failure and the phase of flight during which a failure occurs may continue or the aircraft may perform an alternative phase of flight in response to the failure.

As discussed above, an electric propulsion system may include an electric engine that provides mechanical shaft power to a propeller assembly to produce thrust. In some embodiments, the electric engine of an electric propulsion system may include a High Voltage Power System supplying high voltage power to the electric engines and/or a Low Voltage System supplying low voltage direct current power to an electric engine. Some embodiments may include the electric engine(s) digitally communicating with a Flight Control System ("FCS") comprising Flight Control Computers ("FCC") that may send and receive signals to and from the electric engine including commands and responsive data or status. Some embodiments may include an electric engine capable of receiving operating parameters from and communicating operating parameters to the FCC, including speed, voltage, current, torque, temperature, vibration, propeller position, and any other value of operating parameters.

In some embodiments, a flight control system may include a system capable of communicating with an electric engine to send and receive analog/discrete signals to the electric engine and controlling an apparatus capable of

redirecting thrust of the tilt propellers between a primarily vertical direction during vertical flight mode to a mostly horizontal direction during forward-flight mode. In some embodiments, this system may be referred to as a Tilt Propeller System ("TPS") and may be capable of communicating and orienting additional features of the electric propulsion system.

FIG. **6** illustrates block diagram of an exemplary architecture and design of an electric propulsion unit **600** consistent with disclosed embodiments. In some embodiments, an electric propulsion system **602** may include an electric engine subsystem **604** that may supply torque, via a shaft, to a propeller subsystem **606** to produce the thrust of the electric propulsion system **602**. Some embodiments may include the electric engine subsystem **604** receiving low voltage DC (LV DC) power from a Low Voltage System (LVS) **608**. Some embodiments may include the electric engine subsystem **604** receiving high voltage (HV) power from a High Voltage Power System (HVPS) **610** comprising at least one battery or other device capable of storing energy. In some embodiments, a High Voltage Power System may include more than one battery, or other device capable of storing energy, supplying high voltage power to the electric engine subsystem **604**. It is recognized that such a configuration may be advantageous as to not risk a single point of failure where a single battery failure leads to an electric propulsion system **602** failure.

Some embodiments may include an electric propulsion system **602** including an electric engine subsystem **604** receiving signals from and sending signals to a flight control system **612**. In some embodiments, a flight control system **612** may comprise a flight control computer capable of using Controller Area Network ("CAN") data bus signals to send commands to the electric engine subsystem **604** and receive status and data from the electric engine subsystem **604**. It should be understood that while CAN data bus signals are used between the flight control computer and the electric engine(s), some embodiments may include any form of communication with the ability to send and receive data from a flight control computer to an electric engine. In some embodiments, a flight control system **612** may also include a Tilt Propeller System ("TPS") **614** capable of sending and receiving analog, discrete data to and from the electric engine subsystem **604** of the tilt propellers. A tilt propeller system **614** may include an apparatus capable of communicating operating parameters to an electric engine subsystem **604** and articulating an orientation of the propeller subsystem **606** to redirect the thrust of the tilt propellers during various phases of flight using mechanical means such as a gearbox assembly, linear actuators, and any other configuration of components to alter an orientation of the propeller subsystem **606**.

As discussed throughout, an exemplary VTOL aircraft may possess various types of electric propulsion systems including tilt propellers and lift propellers, including forward electric engines with the ability to tilt during various phases of flight, and aft electric engines that remain in one orientation and may only be active during certain phases of flight (i.e., take off, landing, and hover).

FIG. **7** is a schematic diagram illustrating an exemplary tilt electric propulsion system of a VTOL aircraft, consistent with disclosed embodiments. A tiltable electric propulsion system **700** may include an electric engine assembly **702** aligned along a shaft **724** that is connected to an output shaft **738** that is mechanically coupled to a propeller assembly **720** comprising a hub, a spinner, and tilt propeller blades. In some embodiments, an electric engine assembly **702** may include a motor and gearbox assembly **704** aligned along and mechanically coupled to the shaft **724**. In some embodiments, a motor and gearbox assembly **704** may include an electric motor assembly comprising a stator **706** and a rotor **708**. As shown in FIG. **7**, and present in some embodiments, a stator **706** may include multiple stator windings connected to the inverter **716**. In such a configuration, a stator **706** may incorporate one or more redundances so that, in the event one set of windings were to fail, power would still be transmitted to the stator **706** via one or more remaining windings, so that the electric engine assembly **702** retains power and continues to generate thrust at the propeller assembly **720**.

In some embodiments, a motor and gearbox assembly **704** may contain a gearbox **710** aligned along the shaft **724** to provide a gear reduction between the torque of the shaft **724** from the electric engine assembly, comprising a stator **706** and rotor **708**, and the output shaft **738** Torque applied to the output shaft **738** may be transferred to the propeller assembly **720**. Some embodiments may include a gearbox **710** containing an oil pump. In such an embodiment, the oil pump may drive a circulation of oil throughout the motor and gearbox assembly **704** at a speed equivalent to the rotation of the output shaft **738** to cool and lubricate the gearbox and electric motor components. In some embodiments, the oil pump may drive a circulation of oil at a speed greater than or less than the rotation of the output shaft **738**. Some embodiments of a motor and gearbox assembly **704** may include propeller position sensors **712** present within the housing that may detect a magnetic field produced by the electric engine assembly to determine a propeller position. Further embodiments may include propeller position sensors **712** that are powered by an inverter **716** and send collected data to an inverter **716**.

In some embodiments, an electric engine assembly **702** may also include an inverter assembly **714** aligned along the shaft **724**. An inverter assembly **714** may include an inverter **716** and an inverter power supply **740** An inverter power supply **740** may accept low voltage DC power from a low voltage system **734** located outside the electric engine assembly **702**. An inverter power supply **740** may accept low voltage DC power originating from a high voltage power system **732**, located outside the electric engine assembly **702**, that has been converted to low voltage DC power via a DC-DC converter **742**. An inverter **716** may supply high voltage alternating current to the stator **706** of the electric engine assembly located within the motor and gearbox assembly **704** via at least one three-phase winding. An inverter assembly **714** may include an inverter **716** that may receive flight control data from a flight control computing subsystem **736**.

In some embodiments, a motor and gearbox **704** may be located between an inverter assembly **714** and a propeller assembly **720**. Some embodiments may also include a divider plate **744** coupled to the motor and gearbox assembly **704** and inverter assembly **714**. A divider plate **744** may create an enclosed environment for an upper portion of the motor and gearbox assembly **704** via an end bell assembly, and create an enclosed environment for a lower portion of the inverter assembly **714** via a thermal plate. In some embodiments, divider plate **744** may serve as an integral mounting bracket for supporting heat exchanger **718**. Heat exchanger **718** may comprise, for example, a folded fin or other type of heat exchanger. In some embodiments, the electric propulsion system **700** may circulate oil or other coolant throughout the electric engine assembly **702**, motor and gearbox assembly **704**, or inverter assembly **714** to

transfer heat generated from the components to the oil or other coolant liquid. The heated oil or other coolant liquid may circulate through heat exchanger **718** to transfer the heat to an air flow **722** passing through the fins of the heat exchanger.

In some embodiments, the electric engine assembly **702** may be mounted or coupled to a boom structure **726** of the aircraft. A variable pitch mechanism **730** may be mechanically coupled to the propeller assembly **720**. In some embodiments, the variable pitch mechanism may abut the electric engine assembly **702**. In some embodiments, the variable pitch mechanism **730** may be coupled to the variable pitch mechanism **730** such it may be remotely mounted within the boom, wing, or fuselage of the aircraft. In some embodiments, the variable pitch mechanism **730** may include a shaft or component traveling within or adjacent to the shaft **724** to the propeller assembly **720**. A variable pitch mechanism **730** may serve to change the collective angle of the forward electric engine's propeller assembly blades as needed for operation during the hover-phase, transition phase, and cruise-phase. Some embodiments may include the electric engine assembly **702** being mechanically coupled to a tilt propeller subsystem **728** that may redirect thrust between a primarily vertical direction during vertical flight mode to a mostly horizontal direction during forward-flight mode. In some embodiments, the tilt propeller subsystem may abut the variable pitch mechanism **730**. Some embodiments may include a tilt propeller subsystem **728** comprising various components located in various locations. For example, a component of the tilt propeller subsystem may be coupled to the electric engine assembly **702** and other components may be coupled to the variable pitch mechanism **730**. These various components of the tilt propeller subsystem **728** may work together to redirect the thrust of the tiltable electric propulsion system **700**.

FIGS. **8**A-C are illustrations of an exemplary tilt electric propulsion system of a VTOL aircraft, consistent with disclosed embodiments. FIGS. **8**A-C possess like numerals and refer to similar elements of tiltable electric propulsion systems **800**A, **800**B, and **800**C. As such, similar design considerations and configurations may be considered throughout the embodiments

FIGS. **8**A and **8**B illustrate a side profile and perspective view, respectively, of a tiltable electric propulsion system **800**A, **800**B in a cruise configuration integrated into a boom **812**A, **812**B consistent with this disclosure. A tiltable propeller electric propulsion system **800**A, **800**B may comprise an electric engine assembly **802**A, **802**B housed within a boom **812**A, **812**B of a VTOL aircraft. In some embodiments, a cruise configuration may include the electric engine assembly **802**A, **802**B being posited within the boom **812**A, **812**B. An electric engine assembly **802**A, **802**B may comprise an electric motor assembly, a gearbox assembly, an inverter assembly with power connection channels **810**A, **810**B, and a heat exchanger **804**A, **804**B, as described herein. The electric engine assembly **802**A, **802**B may be mechanically coupled to a propulsion assembly **808**A, **808**B comprising a shaft flange assembly **806**A, **806**B, a spinner, and propeller blades.

FIG. **8**C illustrates a top-down view, along a spinner **808**C, of a tiltable electric propulsion system **800**C in a lift configuration integrated into a boom **812**B consistent with this disclosure. As shown in FIG. **8**C a tiltable electric propulsion system **800**C in a lift configuration may comprise the electric engine assembly **802**A, **802**B being posited outside of the boom **812**C and changing its orientation with respect to the boom **812**C.

As discussed herein, a lift electric propulsion system may be configured to provide thrust in one direction and may not provide thrust during all phases of flight. For example, a lift system may provide thrust during take-off, landing, and hover, but may not provide thrust during cruise.

FIG. **9** is a schematic diagram illustrating an exemplary lift electric propulsion system of a VTOL aircraft, consistent with disclosed embodiments. A lift electric propulsion system **900** may be mounted or coupled to a boom structure **924** of the aircraft. A lift electric propulsion system **900** may include electric engine assembly **902** aligned along a shaft **940** that is connected to an output shaft **932** that is mechanically coupled to a propeller assembly **920** comprising a hub and tilt propeller blades. In some embodiments, an electric engine assembly **902** may include a motor and gearbox assembly housing **904** aligned along and mechanically coupled to the shaft **940**. In some embodiments, a motor and gearbox assembly housing **904** may include an electric motor assembly comprising a stator **906** and a rotor **908**. A stator **906** may include multiple stator windings connected to the inverter **916**. In such a configuration, a stator **906** may incorporate one or more redundancies and backup measures to avoid a single point of failure in the case. For example, stator **906** may include multiple windings such that, if a winding fails, power may continue to be transmitted to the stator **906** via remaining windings, allowing the electric engine assembly **902** to retain power and continue to generate thrust at the propeller assembly **920**.

In some embodiments, a motor and gearbox assembly housing **904** may contain a gearbox **910** aligned along the shaft **940** to provide a gear reduction between the torque of the shaft **932** from the electric engine assembly, comprising a stator **906** and rotor **908**, and the output shaft **932**. Torque applied to the output shaft **932** may be transferred to the propeller assembly **920**. Some embodiments may include a gearbox **910** containing a fluid pump for circulating cooling and/or lubrication fluid. In the embodiment shown, the fluid pump is an oil pump. In such an embodiment, the oil pump may drive a circulation of oil throughout the motor and gearbox assembly housing **904** at a speed equivalent to the rotation of the output shaft **932** to cool and lubricate the gearbox and electric motor components. Some embodiments of a motor and gearbox assembly housing **904** may include propeller position sensors **912** present within the housing that may detect a magnetic field produced by the electric engine assembly to determine a propeller position. Further embodiments may include propeller position sensors **912** that are powered by an inverter **916** and send collected data to an inverter **916** that may be transferred to a flight control computing system **930** among other flight control data.

In some embodiments, an electric engine assembly **902** may also include an inverter assembly housing **914** aligned along an axis sharing the axis of the shaft **924**. An inverter assembly housing **914** may include an inverter **916** and an inverter power supply **934**. An inverter power supply **934** may accept low voltage DC power from a low voltage system **928** located outside the electric engine assembly **902**. An inverter power supply **934** may accept low voltage DC power originating from a high voltage power system **926**, located outside the electric engine assembly **902**, that has been converted to low voltage DC power via a DC-DC converter **936**. An inverter **916** may supply high voltage alternating current to the stator **906** of the electric engine assembly located within the motor and gearbox assembly housing **904** via at least one three-phase winding. An

inverter assembly **914** may include an inverter **916** that may send data to and receive data from a flight control computing subsystem **930**.

In some embodiments, a motor and gearbox housing **904** may be located between an inverter assembly housing **914** and a propeller assembly **920**. Some embodiments may also include a divider plate **938** coupled to the motor and gearbox assembly housing **904** and inverter assembly housing **914**. A divider plate **938** may create an enclosed environment for an upper portion of the motor and gearbox assembly housing **904** via an end bell assembly, and may create an enclosed environment for a lower portion of the inverter assembly housing **914** via a thermal plate. In some embodiments, a divider plate **938** may serve as an integral mounting bracket for supporting heat exchanger **918**. Heat exchanger **918** may comprise, e.g., a folded fin or other type of heat exchanger. In some embodiments, the electric propulsion system **900** may circulate oil or other coolant fluid throughout the electric engine assembly **902**, motor and gearbox assembly **904**, or inverter assembly **914** to transfer heat generated from the components to the oil or other coolant liquid. The heated oil or other coolant liquid may be circulated through heat exchanger **918** to transfer the heat to an air flow **922** passing through the fins of the heat exchanger.

In some embodiments, a tiltable electric propulsion system and a lift electric propulsion system may possess similar components. This may be advantageous with respect to many design considerations present within VTOL aircrafts. For example, from a manufacturability standpoint, different types of electric propulsion systems having similar components may be beneficial in terms of manufacturing efficiency. Further, having similar components may be beneficial in terms of risk management as similar components possess similar points of failure and these points of failure may be well explored and designed around when comparing systems having similar components to systems having different components and configurations.

While a tiltable electric propulsion system may possess additional, and in some embodiments different, components compared to a lift electric propulsion system, it should be understood that in some embodiments a tiltable electric propulsion system and a lift electric propulsion system may possess the same configuration of components. For example, in some embodiments, a tiltable and lift electric propulsion system may contain the same components while the lift electric propulsion system may be coupled to a boom, wing, or fuselage of the aircraft such that it may not be able to provide thrust in as many directions as tiltable electric propulsion system.

FIGS. **10**A-B are illustrations of an exemplary lift electric propulsion systems of a VTOL aircraft, consistent with disclosed embodiments. FIGS. **10**A and **10**B possess like numerals and refer to similar elements of lift electric propulsion systems **1000**A and **1000**B. As such, similar design considerations and configurations may be considered throughout the embodiments

FIG. **10**A illustrates a side profile of a lift electric propulsion system **1000**A in a lift configuration integrated into a boom **101**A consistent with this disclosure. A lift electric propulsion system **1000**A may comprise an electric engine assembly **1002**A housed within a boom **101**A of a VTOL aircraft. In some embodiments, a lift configuration may include the electric engine assembly **1002**A being posited vertically within the boom **101**A. An electric engine assembly **1002**A may comprise an electric motor assembly, a gearbox assembly, an inverter assembly with power connection channels **1008**A, and a heat exchanger **1004**A, as described herein. The electric engine assembly **1002**A may be mechanically coupled to a propulsion assembly **1006**A comprising a shaft flange assembly and propeller blades.

FIG. **10**B illustrates a top-down view of a lift electric propulsion system **1000**B in a lift configuration integrated into a boom **1010**B, consistent with this disclosure.

Some embodiments of the disclosed electric engine may generate heat during operation and may comprise a heat management system to ensure components of the electric engine do not fail during operation. In some embodiments, coolant may be used and circulated throughout individual components of the engine, such as an inverter, gearbox, or motor, through some of the components, or through all of the components of the engine to assist with managing the heat present in the engine. Some embodiments may include using air cooling methods to cool the electric engine or using a mixture of coolant and air to manage the heat generated during operation in the electric engine. In some embodiments, the coolant being used may also be the same liquid that is being used as lubricant throughout the inverter, gearbox, or motor. For example, components of the electric engines may be cooled using a liquid or air or using a mixture of air and liquid cooling. As another example, a motor may be cooled using air cooling while the inverter and gearbox are cooled using liquid cooling. It should be understood that a mixture of cooling may be used for any combination of electric engine components or within each component.

In some embodiments, oil may be used as a lubricant throughout an electric engine and may also be used as coolant fluid to assist in managing the heat generated by the engine during operation. Further to this example, different amounts of oil may be used to act as both lubricant and coolant fluid in the electric engine, such as less than or equal to one quart, 1.5 quarts, two quarts, 2.5 quarts, three quarts, five quarts or any other amount of oil needed to lubricate and cool the electric engine, in combination with or without the assistance of air cooling. In some embodiments, the amount of the oil or liquid to be used in the system in relation to cooling may be determined based on an amount of thermal mass needed to drive heat transfer from the components of the electric propulsion system. As has been disclosed herein, an electric engine may have different primary functionalities such as being used only for lifting and landing, and as such only being used in one orientation, or being used during all stages of flight such as lifting, landing, and in-flight. An engine that is used in all stages of flight may experience various orientations throughout flight and may comprise more lubricant and coolant than the engine only used in one orientation. As such, all the engines on an aircraft may not include the same amount of lubricant and coolant. For example, a lifting and landing engine may only require less than one quart of oil while an engine that operates in all stages of flight may require more than one quart of oil. In some embodiments, the amount of oil or liquid for cooling may be of an appropriate amount to provide sufficient thermal mass to drive heat transfer from the components of the electric propulsion system no matter the orientation of the electric propulsion system. The embodiments discussed herein are exemplary, non-limiting, and do not dictate the bounds of the amount of lubricant and coolant that may be used in an electric engine.

Some embodiments may use oil to lubricate the electric engine and to cool the electric engine. Such embodiments may require additional volumes of oil. In such embodiments, the additional oil may allow for removal of traditional components that may be used to cool such an electric engine.

For example, if the electric engine were cooled by another liquid such as glycol, the engine may comprise separate heat exchangers for both the lubricant fluid and the coolant fluid. As such, in embodiments where a single fluid is being used for both lubrication and cooling, such as oil, an increase in oil would be present but there would only be a need for one heat exchanger, so there may be a decrease in mass, due to using less heat exchangers and potentially other components not being required, of the overall system and a more appealing drag profile may be present. Further, using one substance for the lubrication and cooling of the engine may increase efficiency of the system due to the reduction in mass and the benefits of cooling the engine with a substance rather than relying on air cooling which may have issues traveling throughout the engine.

Some embodiments of electric engines may include various components for monitoring flammable fluids, and for preventing ingress of flammable materials into certain sections of the electric engine. Some embodiments may include an electric engine possessing a wet zone enclosure that may be defined by a gearbox, motor, and/or heat exchanger. In some embodiments, an electric engine may possess up to 4 liters, or more, of air within the motor-gearbox housing which is in contact with engine oil. Embodiments of a motor-gearbox housing may equalize internal and external pressure using a breather. Embodiments of a breather may include it protruding above nearby design features to prevent inadvertent entry of external fluids. Some embodiments may include a breather that possesses a screen and a circuitous entry path to prevent entry of external debris. Embodiments may include a sight glass being present on both the tilt and lift electric engines in order to check that oil is not overfilled or underfilled during servicing.

Some embodiments of electric engines may include active protection features in the forward and aft electric engines such as monitoring vibration throughout the engine and internal temperatures such as oil temperature, stator winding set temperature, inverter bulk capacitor temperature, power module temperature, control board power module temperature, control board control processor temperature, control board monitor processor temperature, internal hot-spot temperatures, and other various operating conditions throughout the engine as needed. Such monitoring may be accomplished using various sensors positioned throughout the electric propulsion system and aircraft. Embodiments may include vibration limits based on known failure points or resonances of components and overtemperature limits set based on known failure temperatures and operating limits in relation to auto-ignition temperatures of fluids. In some embodiments, the various sensors used to monitor the operating conditions throughout the engine may report operating conditions to the flight control system. Some embodiments may include a threshold operating value that may be required before an operating value is sent to, or flagged by, the flight control system. In some embodiments, a flight control system may, in response to detecting an operating condition, act to reduce the amount of power directed to an electric propulsion system. Some embodiments may include reducing the amount of power to an electric propulsion system to reduce mechanical wear or friction sparks from vibrations and/or reducing power in an effort to reduce the temperature of components present within the electric propulsion system. Further, some embodiments may include reducing power to an electric propulsion system where a detected efficiency of an inverter is less than a targeted efficiency. In some embodiments, for example where twelve electric propulsion systems are present within the aircraft, a flight control system may act to reduce power, or terminate power, to a single electric propulsion system while increasing the power directed to the remaining electric propulsion systems, or a subset thereof, to counter reduction in lift produced by the one electric propulsion system. In some embodiments, the flight control system may establish various thresholds of operating conditions to correspond with the reduction or increase of power to an electric propulsion system.

Some embodiments may include a High Voltage Power System that may have fuses at the high voltage battery terminals which may rapidly and irreversibly disconnect the engine electrical connection to mitigate and avoid overcurrent events. Such overcurrent protection may be activated when the electric engine current draw is greater than the Overcurrent operating. As such, in some embodiments, failure conditions which lead to overcurrent may only lead to a transient overheating, arc or spark faults. Some embodiments may include a fire threat characterization test ignition source that may be selected to be a more severe ignition source than a short occurring in the electric engine and being opened by the engine fuse. In some embodiments, an inverter may detect AC overcurrent and isolate the erroneous phase and/or will continuously monitor input DC voltage, and will apply protective actions to keep voltages under the overvoltage operating limit.

During takeoff, landing, hover and cruise, motors and related control components of the VTOL aircraft may generate heat. The heat must be dissipated to prevent degradation or damage to the motor, control components and other elements of the VTOL aircraft. For some types of VTOL aircraft, such as electric VTOL (eVTOL) aircraft, thermal control is likewise important to maintain optimal energy efficiency of, e.g., battery-powered components.

Some elements may generate high thermal loads only during certain operational periods. For example, some lift propellers may be used only during takeoff, landing, and hover, and may be shut off during cruise. Therefore, such lift propellers may generate a high thermal load during takeoff, landing, and hover, and generate little or no heat during cruise.

B. Exemplary Electric Propulsion System Embodiments

As described herein, embodiments of an electric engine may include an inverter assembly, a gearbox assembly, and an electric motor assembly, or various combinations thereof. In some embodiments, the inverter assembly, the gearbox assembly, and the electric motor assembly may be substantially aligned along a central axis of the electric engine. As disclosed herein, these assemblies or combinations thereof may be substantially aligned along an axis by sharing a common axis or having parallel axes that are within a distance less than or equal to 5% of the outer diameter of the component with the largest diameters of one another. For example, the inverter assembly, the gearbox assembly, and the electric motor assembly may be substantially aligned along a central axis where the central axis of the inverter assembly, the central axis of the gearbox assembly, and the central axis of the electric motor assembly are within a distance less than or equal 5% of the outer diameter of the electric motor assembly where the electric motor assembly possesses a greater outer diameter than the gearbox assembly and inverter assembly. It should be understood that the embodiments described herein are only exemplary and while certain components of the electric propulsion system may be shown to abut others, all configurations of abutting may be present. For example, a gearbox assembly may be shown to abut an inverter assembly and an electric motor assembly.

Further, in some embodiments an inverter assembly may abut a gearbox assembly and an electric motor assembly. Some embodiments may include an electric motor assembly abutting a gearbox assembly and an inverter assembly.

In some embodiments, each of the inverter assembly, the gearbox assembly, and the electric motor assembly may abutting at least one of the other assemblies. Abutting may include direct or indirect contact between the components comprising an assembly or housings wherein an assembly is located. In some embodiments, an electric engine may include an inverter assembly and an electric motor assembly without a gearbox assembly. Some embodiments of an electric engine may include an electric motor assembly and a gearbox assembly without an inverter assembly, or an electric motor assembly without a gearbox assembly or an inverter assembly.

FIGS. **11**A-C are cross-sectional illustrations of exemplary electric propulsion systems of a VTOL aircraft, consistent with disclosed embodiments FIG. **11**A illustrates an example of an electric propulsion system. In some embodiments, an electric engine may directly assist in the propulsion of propellers for an aircraft. Electric engine **1100**A may include a motor housing **1102**A. Electric engine **1100**A may also include an electric motor assembly comprising components such as a stator **1104**A, rotor magnet **1106**A, and rotor **1108**A. In some embodiments, a rotor **1108**A may be mechanically coupled to a main shaft **1110**A such that the main shaft **1110**A spins at a speed equivalent to the rotation speed of the rotor **1108**A. The main shaft **1110**A may be mechanically coupled to shaft flange assembly **1112**A. In some embodiments, a shaft flange assembly **1112**A may be an anchoring point for propellers. The electric motor assembly may be substantially aligned along central axis **1114**A.

In some embodiments, an electric engine may include a gearbox. FIG. **11**B illustrates an example of an electric engine. In some embodiments, an electric engine may include an electric motor assembly and a gearbox assembly substantially aligned along a shaft. In some embodiments, an electric motor assembly, a gearbox assembly, and a shaft may be substantially aligned along an axis **1114**B. Electric engine **1100**B may include a motor housing **1102**B, stator **1104**B, rotor magnet **1106**B, and rotor **1108**B. In some embodiments, the rotor **1108**B may be mechanically coupled to a main shaft **1110**B such that the main shaft **1110**B spins at a speed equivalent to the speed of the rotor **1108**B. A main shaft **1110**B may be mechanically coupled to a shaft flange assembly **1112**B such that the shaft flange assembly **1112**B, and by extension a propeller assembly not shown, may rotate at a speed equal to the speed of rotation of the main shaft **1110**B. In some embodiments, a gearbox assembly may provide a gear reduction and change the speed of rotation of the main shaft **1110**B. For example, electric engine **1102**B may include gearbox assembly comprising a sun gear **1116**B, planetary gears **1118**B, ring gear **1020**B, and planetary carrier **1122**B. In some embodiments, a sun gear **1116**B may be mechanically coupled to the main shaft **1110**B such that the sun gear **1116**B rotates at a speed equal to that of the main shaft **1110**B. A sun gear **1116**B may interface with planetary gears **1118**B that also interface with a ring gear **1120**B. In such an embodiment where the sun gear **1116**B is rotating, the ring gear **1120**B may be fixed to the motor housing **1102**B. In some embodiments, the planetary gears **1118**B may rotate around the sun gear **1116**B due to their interaction with the rotating sun gear **1116**B and fixed ring gear **1120**B. A planetary carrier **1122**B may be mechanically coupled to planetary gears **1118**B and may rotate at an equivalent speed. Some embodiments may include a planetary carrier **1122**B mechanically coupled to the main shaft **1110**B. In some embodiments, a main shaft **1110**B may include multiple phases of the shaft or layers of the shaft such that portions of the shaft may rotate at different speeds. Some embodiments may include a first portion of the main shaft rotating at a speed equivalent to the speed of the rotor **1108**B and another portion of the main shaft rotating at a speed equivalent to the speed of the planetary carrier **1122**B. In some embodiments, a speed of the planetary carrier may be less than the speed of the rotor **1108**B.

In some embodiments, an electric engine **1100**B may include bearings **1124**B, **1126**B aligned along the main shaft **1110**B. Some embodiments may include an inner race of bearings **1124**B, **1126**B that are mechanically coupled to the planetary carrier and various bearings such as **1124**B and **1126**B.

FIG. **11**C illustrates an example of an electric propulsion system. In some embodiments, an electric propulsion system may include an electric motor assembly and a gearbox assembly substantially aligned along a shaft. In some embodiments, an electric motor assembly may be positioned between a gearbox assembly and a shaft flange assembly. Electric propulsion system **1100**C may include a motor-gearbox assembly housing **1102**C. In some embodiments, an electric propulsion system **1100**C may comprise an electric motor assembly including a stator **1104**C, rotor magnet **1106**C, and rotor **1108**C. Electric propulsion system **1100**C may also include a gearbox assembly. In some embodiments, a gearbox assembly may comprise a sun gear **1116**C, planetary gears **1118**C, ring gear **1120**C, and a planetary carrier **1122**C. A sun gear **1116**C may interface with planetary gears **1118**C that also may interface with a ring gear **1120**C. Sun gear **1116**C may be mechanically coupled to rotor **1106**C, such that the rotation of rotor **1106**C may rotate the sun gear **1116**C at the same speed of rotation. A planetary carrier **1122**B may be mechanically coupled to planetary gears **1118**C and may rotate at an equivalent speed. Some embodiments may include a planetary carrier **1122**C mechanically coupled to the main shaft **1110**C. A main shaft **1110**C may be mechanically coupled to a shaft flange assembly **1112**C. Main shaft **1110**C may be substantially aligned along central axis **1114**C, such that the gearbox assembly and motor assembly are also substantially aligned along central axis **1114**C. In some embodiments, an electric propulsion system **1100**C may comprise a heat exchanger **1124**C that may be used to cool oil or liquid used to cool or lubricate components of the gearbox assembly or electric motor assembly.

Electric propulsion systems **1100**A-C, as discussed above, are exemplary embodiments. However, it is understood that while electric propulsion system **1100**A may be capable of providing required thrust to a VTOL aircraft, it may creating a larger drag profile and contribute more mass to the VTOL aircraft than electric propulsion systems **1100**B and **1100**C. Electric propulsion systems **1100**B and **1100**C comprise gearbox assemblies. As such, the electric propulsion systems **1100**B and **1100**C possess a gear reduction that allows the electric motor assembly, and thus the electric propulsion systems, to possess smaller drag profiles and less mass.

Electric propulsion system **1100**B may possess a gearbox assembly between an electric motor assembly and a shaft flange assembly. While this configuration may require less mass than electric propulsion system **1100**A, it may require more mass than electric propulsion system **1100**C. Electric propulsion system **1100**B may possess a gearbox assembly such that an input shaft, or sun gear, travels from the electric motor assembly to the gearbox assembly and an output shaft,

or portion of planetary carrier, travels from the gearbox assembly to the shaft flange assembly. Whereas electric propulsion system **1100**C, in some embodiments, may possess a sun gear that travels from the rotor of the electric motor assembly to the gearbox assembly and a main shaft, coupled to a planetary carrier or carrier cover, that travels through the sun gear, past the electric motor assembly to a shaft flange assembly. As such, electric propulsion system **1100**C may comprise a more compact design, housing, and drag profile when compared to electric propulsion system **1100**B. This may result in a more efficient drag profile and a more mass efficient system. Further, electric propulsion system **1100**B may possess a gearbox assembly without means of lubrication which may limit the run time of the electric propulsion system. Electric propulsion system **1100**C may comprise a heat exchanger to cool and lubricate portions of the systems, including the gearbox assembly. This may lead to additional efficiency and long flight range times.

FIG. **49** illustrates a cross sectional view of an exemplary electric propulsion system of a VTOL aircraft, consistent with disclosed embodiments. Electric propulsion system **4900** may comprise system that initially sends torque away from a propeller to then bring the torque back through portions of the system to the propeller. In some embodiments, electric propulsion system **4900** may comprise a motor-gearbox assembly housing **4922**, an inverter assembly housing **4924**, and a heat exchanger **4926**. In some embodiments, an electric motor assembly may include a stator **4902** and a rotor **4904**. In some embodiments, electric propulsion system **4900** may comprise a gearbox assembly comprising a sun gear **4906**, planetary gear **4908**, ring gear **4910**, and a planetary carrier **4912**. A sun gear **4906** may be mechanically coupled to a rotor **4904**. A sun gear **4906** may interface with planetary gear **4908**. Planetary gear **4908** may interface with a ring gear **4910**, that may be fixed, such that the planetary gear **4908** rotate about the sun gear **4906** against the ring gear **4910**. In some embodiments, a planetary gear **4908** may comprise a compound planetary gear **4908**, **4950**. A planetary carrier **4912** may be mechanically coupled to planetary gear **4908** via a shaft **4914** that may extend from the planetary gear **4908**, along a central axis **4916** of the planetary gear, and be received by planetary carrier **4912**. Planetary carrier **4912** may rotate at a rate of speed equal to that of the planetary gear **4908**. Planetary carrier **4912** may be mechanically coupled to a main shaft **4918** such that the main shaft **4918** may rotate at a rate of speed equal to that of the planetary carrier **4912**. In some embodiments, a planetary gear **4908** may be mechanically coupled to a carrier cover via a shaft such that the carrier cover may rotate at a rate of speed equal to that of the planetary gear **4908**. Main shaft **4918** may be mechanically coupled to a shaft flange assembly **4920** such that shaft flange assembly **4920** may rotate at a rate of speed equal to that of the main shaft **4918**. It should be understood that a planetary gear **4908** or compound planetary gear **4908**, **4950** may comprise multiple planetary gears rotating about a sun gear **4906**.

Due to the mechanical coupling as described herein, torque may be transferred from the rotor **4904** to sun gear **4906** along path **4930**. The sun gear **4906** may transfer torque to planetary gear **4908** along paths **4932** and **4934**. The planetary gear **4908**, and in some embodiments compound planetary gear **4908**, **4950**, may transfer torque to planetary carrier along paths **4936** and **4938**. The planetary carrier may transfer torque to the main shaft **4918** along paths **4940**. The main shaft **4918** may transfer torque along its length, via path **4944** and to a propeller assembly **4920**. A propeller assembly **4920** may transfer torque to propellers via paths **4946** and **4948**. It should be understood that the paths discussed above are exemplary and all configurations consisting of sending torque away from a propeller to a gearbox assembly and then sending the torque back through the gearbox assembly and electric motor assembly to the propellers are considered.

In some embodiments, a process of delivering power from an electric engine using a gearbox assembly via a reverse torque path may comprise driving a planetary gear that is mechanically coupled to a rotor of an electric motor assembly. In some embodiments, the planetary gear may interface with a sun gear and a ring gear. Some embodiments may include a hollow sun gear and a fixed ring gear. Some embodiments may include driving a planetary carrier that is connected a shaft that extends from the planetary gear. A shaft that extends from a planetary gear may include a shaft aligned along a central axis of the planetary gear. Some embodiments may include driving a carrier cover that is connected to a shaft from a shaft that extends concentrically from the planetary gear. Some embodiments may include driving a main shaft. Driving a main shaft may comprise driving a first portion of the main shaft that is mechanically coupled to the carrier cover and transferring torque along the main shaft to a second portion of the main shaft that is mechanically coupled to a propeller assembly. Some embodiments may include a heat exchanger, as described herein, that may cool the gearbox assembly using various amounts of oil that may comprise one quart, 1.5 quarts, two quarts, 2.5 quarts, three quarts, or five quarts.

In some embodiments, a gearbox assembly may include multiple sets of gearboxes. For example, in some embodiments, the output of a gearbox assembly may be fed into another gearbox assembly to achieve a greater gear reduction. Such embodiments may include at least one sun gear, at least one set of planetary gears, at least one ring gear, and at least one planetary carrier. The gearboxes may possess common gears such as a common sun gear, a common set of planetary gears, and a common ring gear. The embodiments discussed herein may be modified to include multiple sets of gearboxes.

FIG. **53** illustrates flow chart of an exemplary process for transmitting torque from an electric motor assembly to a propeller assembly of a VTOL aircraft **5300**, consistent with disclosed embodiments. While the block diagram may be described below in connection with certain implementation embodiments presented in other figures, those implementations are provided for illustrative purposes only, and are not intended to serve as a limitation on the block diagram.

FIG. **53** includes process blocks **5302** to **5312**. At block **5302**, a process for delivering power from an electric engine using a gearbox assembly may include driving a planetary gear that is mechanically coupled to a rotor of an electric motor, consistent with the discussion throughout this disclosure.

At block **5304**, a process for delivering power from an electric engine using a gearbox assembly may include driving a planetary carrier that is connected to at least one shaft that extends concentrically from the planetary gear, consistent with the discussion throughout this disclosure.

At block **5306**, a process for delivering power from an electric engine using a gearbox assembly may include driving a carrier cover that is connected to at least one shaft from a set of shafts that extends concentrically from the planetary gear, consistent with the discussion throughout this disclosure.

At block **5308**, a process for delivering power from an electric engine using a gearbox assembly may include driving a main shaft, consistent with the discussion throughout this disclosure.

At block **5310**, a process for delivering power from an electric engine using a gearbox assembly may include driving a first portion of the main shaft that is mechanically coupled to the carrier cover, consistent with the discussion throughout this disclosure.

At block **5312**, a process for delivering power from an electric engine using a gearbox assembly may include transferring torque along the main shaft to a second portion of the main shaft that is mechanically coupled to a propeller assembly, consistent with the discussion throughout this disclosure.

FIGS. **12**A-D are illustrations and block diagrams of exemplary electric propulsion systems of a VTOL aircraft, consistent with disclosed embodiments.

As described herein, an electric propulsion system may include an inverter assembly, gearbox assembly, and engine assembly. In some embodiments, the electric propulsion system **1200**A may include components packaged in various housings including a motor-gearbox assembly housing **1202**A and an inverter assembly housing **1228**A. Enclosing the various components of electric propulsion system **1200**A in housings **1202**A and **1228**A may provide various benefits, including lower mass and a more efficient drag profile, as described herein. Further, in some embodiments, the gearbox assembly, inverter assembly, and/or electric motor assembly may possess a substantially circular profile. As used herein a profile may be substantially circular where the length of a minor axis of a circular shape and the length of a major axis of a circular shape possess a relationship such that the length of the minor axis is at least a threshold amount, such as 80%, of the length of the major axis. Further, in some embodiments, the gearbox assembly, inverter assembly, and electric motor assembly, or a subset of those listed, may be sized such that the assemblies possess substantially equivalent radii. As used herein assemblies may possess substantially equivalent radii where the difference among the radii between two assemblies is less than a threshold amount, such as 10%, of the radius of the largest assembly. In some embodiments, the profile of components making up the electric propulsion system as described herein may include various polygons such as hexagons, heptagons, octagons, nonagons, decagons, and additional polygons have more than ten sides.

Electric propulsion system **1200**A may include an electric motor assembly, including stator **1204**A, rotor magnet **1206**A, and rotor **1208**A.

In some embodiments, the electric motor assembly may interact with, and in some embodiments transfer toque to, a gearbox assembly. Electric propulsion system **1200**A may include a gearbox assembly, comprising a sun gear **1214**A, a set of planetary gears **1216**A, a planetary carrier **1218**A, and a carrier cover **1220**A. Some embodiments may include a sun gear **1214**A having teeth that interact with teeth of the planetary gears **1216**A, and a ring gear (not picture here in this figure) having teeth that also interact with the teeth of the planetary gears **1216**A. In some embodiments, a shaft **1222**A may extend through or from the planetary gears **1216**A. In some embodiments, the planetary carrier **1218**A may receive a first end of the shafts **1222**A such that the planetary carrier **1218**A may rotate at the same rate as the planetary gears **1216**A. In some embodiments, the carrier cover **1220**A may receive a second end of the shafts **1222**A such that the carrier cover **1220**A may rotate at the same rate as the planetary gears **1216**A. In some embodiments, the planetary gears **1216**A, planetary carrier **1218**A, and carrier cover **1220**A may be mechanically coupled along the axis of shaft **1222**A.

In some embodiments, electric propulsion system **1200**A may include a main shaft **1210**A that may be mechanically coupled to a shaft flange assembly **1224**A to provide mechanical shaft power to turn the propellers of a propeller assembly. As used herein, components may be mechanically coupled where there exists any connections or coupling, whether direct or indirect, between two components. A shaft flange assembly may include a flange that is coupled to a main shaft with a splined connection to take torque loads from the main shaft and transfer the torque to the propellers that coupled to the flange. A flange may also be coupled to a main shaft using fasteners, by welding, by brazing, or any other use of components or methods to couple the main shaft and the flange. In some embodiments, a main shaft and a flange may be machined together to form a single component. In some embodiments, a shaft flange assembly may be a component of a propeller assembly that may comprise a shaft flange assembly, propellers, and a spinner. In some embodiments, a shaft flange assembly may also be referred to as a propeller hub.

In some embodiments, electric propulsion system **1200**A may include components for an inverter assembly, as described herein. For example, electric propulsion system **1200**A may include printed circuit board assemblies (PCBAs) such as a power PCBA **1230**A that may comprise power modules **1232**A, a gate drive PCBA **1236**A, and a control PCBA **1240**A, Some embodiments of the inverter assembly of the electric propulsion system **1200**A may also include a spacer board **1238**A among the various PCBAs. Further, some embodiments may include an energy storage device, for example a DC capacitor that may be stored within the DC capacitor housing **1234**A. Some embodiments of an inverter assembly may also include busbar connectors **1244**A to supply alternating current to the electric motor assembly. Some embodiments of an inverter assembly may include power connections **1246**A coupled to a high voltage connector to deliver high voltage power to the inverter assembly.

Some embodiments of an inverter assembly of the electric propulsion system **1200**A may include layering the respective inverter assembly components in a stacking formation along guide pins **1242**A that extend through each layer of the inverter assembly. It is recognized that an inverter assembly utilizing a stacking formation along guide pins **1242**A may be beneficial in various design criteria relevant for VTOL aircrafts. For example, a stacking formation may allow for a more compact packaging of the inverter assembly, and thus may help in minimizing the mass of the electric propulsion system **1200**A and minimize the drag experienced due to the electric propulsion system packaging. Further, a stacking formation of the inverter assembly may be advantageous from a manufacturing perspective as a stacking formation may allow for tolerances within various parts of the inverter assembly. In some embodiments, structural components may be introduced to the inverter assembly to assist in supporting the stacking formation with loads experienced during various phases of flight. Some embodiments may include inverter assembly components also acting as structural components. For example, a DC capacitor housing **1234**A may house the capacitor, as well as other components, for the inverter assembly and may be made of a plastic, or other material, capable of supporting the PCBAs and other components surrounding it.

In some embodiments, an electric propulsion system **1200**A may include a heat exchanger **1226**A coupled to the motor-gearbox assembly housing **1202**A and an inverter assembly housing **1228**A. A heat exchanger **1226** may be coupled to a dividing plate comprising a thermal plate **1248**A and an end bell plate **1250**A. An end bell plate **1250**A may serve to close off the motor-gearbox assembly housing **1202**A. A thermal plate **1248**A may serve to close off the inverter assembly housing **1228**A. In some embodiments, a dividing plate may serve as an integral mounting bracket for supporting heat exchanger **1226**A. Heat exchanger **1226**A may comprise, e.g., a folded fin or other type of heat exchanger. In some embodiments, the electric propulsion system **1200**A may circulate oil or other coolant throughout the electric motor assembly, gearbox assembly, or inverter assembly to transfer heat generated from the components to the oil or other coolant liquid. The heated oil or other coolant liquid may be circulated through the fins of heat exchanger **1226**A by an internal liquid flow paths which may possess an inlet and outlet for the liquid flow paths that may be coupled to an outlet and inlet, respectively, of the bores or grooves that may be present on the dividing plate. In some embodiments, a motor-gearbox housing **1202**A may comprise a sump **1212**A. A sump **1212** may serve to collect oil or liquid coolant distributed throughout the electric propulsion system **1200**A and recirculate the oil or liquid coolant.

In some embodiments, a heat exchanger may be fluidically coupled to the gearbox assembly, inverter assembly, and/or electric motor assembly. As used herein, an assembly, or components therein, may be fluidically coupled where a liquid flow path from the heat exchanger may interact with, supply liquid to, or interface with the assembly or components therein.

FIG. **12**B illustrates an exemplary schematic diagram of a configuration of an electric propulsion system **1200**B. In some embodiments, the electric propulsion system may include a motor assembly and gearbox assembly. Electric propulsion system **1200**B divider plate **1208**B, motor assembly **1202**B, inverter assembly **1204**B, gearbox assembly **1206**B, heat exchanger **1212**B, and propeller assembly **1210**B. In some embodiments, inverter assembly housing **1216**B may enclose inverter assembly **1204**B, and motor-gearbox housing **1214**B may enclose motor assembly **1202**B and gearbox assembly **1206**B. Inverter assembly housing **1216**B may abut motor-gearbox housing **1214**B. In some embodiments, an electric propulsion system **1200**B may comprise a gearbox assembly **1206**B positioned between an electric motor assembly **1202**B and inverter assembly **1204**B. As described herein, a coolant or lubricant, such as oil, may be distributed throughout the electric propulsion system. For example, oil flow **1218**B may have a path from heat exchanger **1212**B to divider plate **1208**B, then to gearbox assembly **1206**B and motor assembly **1202**B, providing cooling and lubrication to motor assembly **1202**B and gearbox assembly **1206**B. Oil flow **1218**B may then travel from motor assembly **1202**B back to heat exchanger **1212**B. As described herein, propeller assembly **1210**B may drive air flow **1220**B from propellers towards heat exchanger **1212**B. Heat exchanger **1212**B may transfer heat from oil flow **1218**B to air flow **1220**B. Oil flow **1218**B may be cooled and exit heat exchanger **1212**B.

FIG. **12**C illustrates an exemplary schematic diagram of a configuration of an electric propulsion system. In some embodiments, the electric propulsion system **1200**C may include a divider plate **1208**C, motor assembly **1202**C, inverter assembly **1204**C, gearbox assembly **1206**C, heat exchanger **1212**C, and propeller assembly **1210**C. In some embodiments, inverter assembly housing **1216**C may enclose inverter assembly **1204**C, and motor-gearbox housing **1214**C may enclose motor assembly **1202**C and gearbox assembly **1206**C. Inverter assembly housing **1216**C may abut motor-gearbox housing **1214**C. In some embodiments, an electric propulsion system **1200**C may comprise an electric motor assembly **1202**C positioned between a gearbox assembly **1206**C and inverter assembly **1204**C. As described herein, a coolant or lubricant, such as oil, may be distributed throughout the electric propulsion system. For example, oil flow **1218**C may have a path from heat exchanger **1212**C to divider plate **1208**B, then to motor assembly **1202**C and then to gearbox assembly **1206**C, providing cooling and lubrication to motor assembly **1202**C and gearbox assembly **1206**C. Oil flow **1218**C may then travel from motor assembly **1202**C back to heat exchanger **1212**C. As described herein, propeller assembly **1210**C may drive air flow **1220**C from propellers towards heat exchanger **1212**C. Heat exchanger **1212**C may transfer heat from oil flow **1218**C to air flow **1220**C. Oil flow **1218**C may be cooled and exit heat exchanger **1212**C.

FIG. **12**D illustrates an exemplary schematic diagram of a configuration of an electric propulsion system. In some embodiments, the electric propulsion system may comprise a motor and propeller assembly. Electric propulsion system **1200**D may include a divider plate **1208**D, motor assembly **1202**D, inverter assembly **1204**D, heat exchanger **1212**D and propeller assembly **1210**D. In some embodiments, inverter assembly housing **1216**D may enclose inverter assembly **1204**D, and motor assembly housing **1214**D may enclose motor assembly. Inverter assembly housing **121**D may abut motor assembly housing **1214**D. In some embodiments, an electric propulsion system **1200**C may comprise an electric motor assembly **1202**C directly driving a main shaft providing mechanical shaft power to a propeller assembly **1210**C. In such embodiments, the main shaft many rotate at a speed equal to the speed of a rotor within the electric motor assembly **1202**. As described herein, a coolant or lubricant, such as oil, may be distributed throughout the electric propulsion system. For example, oil flow **1218**D may have a path from heat exchanger **1212**D to divider plate **1208**D, then to motor assembly **1202**D, providing cooling and lubrication to motor assembly **1202**D and other components of electric propulsion system **1200**D. Oil flow **1218**D may then travel from motor assembly **1202**D back to heat exchanger **1212**D. As described herein, propeller assembly **1210**D may drive air flow **1220**D from propellers towards heat exchanger **1212**D. Heat exchanger **1212**D may transfer heat from oil flow **1218**D to air flow **1220**D. Oil flow **1218**D may be cooled and exit heat exchanger **1212**D.

FIG. **13** is an illustration of an exploded view of an exemplary electric propulsion system of a VTOL aircraft, consistent with disclosed embodiments. Electric engine **1300** may include an inverter assembly **1304**, end bell assembly **1306**, main shaft assembly **1308**, rotor **1310**, stator housing **1312**, and shaft flange assembly **1314**. In some embodiments, inverter assembly **1304** may abut a gearbox assembly. A gearbox assembly may include end bell assembly **1306** and main shaft assembly **1308**. In some embodiments, the gearbox assembly may abut an electric motor assembly. The electric motor assembly may include rotor **1310** and stator housing **1312**. In some embodiments, components of the electric propulsion system may be substantially aligned along an axis. In some embodiments, the main shaft may represent a central axis that electric propulsion system **1300** components may be substantially aligned along. In alternative embodiments, the sequence of the

inverter assembly, gearbox assembly, and motor assembly may be rearranged such that different electric propulsion system components abut each other, as described herein. A housing of the inverter assembly **1304** may be affixed to the thermal plate of the inverter assembly by screws **1302**. In some embodiments, fasteners **1316** may affix the electric engine **1300** to a boom of the aircraft.

Embodiments of an electric engine may include an electric motor assembly, as described herein. FIG. **14** is an illustration of an exploded view of an exemplary electric motor assembly of a VTOL aircraft, consistent with disclosed embodiments. Electric motor assembly **1400** may include stator assembly **1402**. In some embodiments, a stator may include laminations and coils of insulated wires. In some embodiments, stator assembly **1402** may include permanent magnets. Stator assembly **1402** may include stator core **1404** and wire windings **1406**. In some embodiments, wire windings **1406** may be comprised of copper. Stator assembly **1402** may also include busbars **1408**. As an example, busbars **1408** may be electrically coupled to stator assembly **1402** and assist in electrical conduction of a current. Electric motor **1400** may include various bearings, including bearing retainer **1412** and roller bearing **1414**. Bearing retainer **1412**, roller bearing **1414**, and shaft seal **1416** may be substantially aligned along a central axis. In some embodiments, bearing retainer **1412** may assist in cooling as a cooling oil manifold. In some embodiments, roller bearing **1414** may comprise a spherical shape. Electric motor **1400** may include bearing screws **1410**. Bearing screws **1410** may fasten bearing retainer **1414** to various components of electric motor **1400**, including to roller bearing **1414**. In some embodiments, stator housing **1418** may enclose the stator assembly **1402**, roller bearing **1414**, bearing retainer **1412**, shaft seal **1416**, and bearing screws **1410**. Stator housing **1418** may have an interference fit or press fit with stator assembly **1402**. For example, stator housing **1418** may have a press fit with stator laminations. In some embodiments, stator housing **1418** may have a thermal interference fit to stator assembly **1402**. As an example, stator housing **1418** may be a common housing that packages components of stator **1400** together, providing advantages including mass reduction and elimination of tubes, hoses, and other connectors. In some embodiments, a stator housing **1418** may include a sump **1420** for collecting liquid used in cooling or lubricating the electric propulsion system, as described herein. Further, in some embodiments, additional components of an electric propulsion system may reside within the stator housing to provide further mass reduction.

FIGS. **15**A-C are illustrations of stator assemblies of a VTOL aircraft, consistent with disclosed embodiments. FIG. **15**A illustrates a view of a stator core. In some embodiments, stator **1500**A may include wound stator assembly **1502**A, and copper windings **1504**A. FIG. **15**B illustrates an additional view of a stator core **1500**B. Laminations **1502**B may separate copper windings **1504**B. FIG. **15**C depicts an example of a stator slot. As an example, stator core **1500**C may include copper windings **1506**C, which may be housed in stator iron **1502**C. Slot liner **1508**C may separate copper windings **1506**C from stator iron **1502**C. Slot liner **1508**C may provide electric insulation. Stator iron **1502**C may be contoured to fit slot wedge **1504**C, with the slot wedge **1504**C residing above the copper windings **1506**C. The slot wedge **1504**C may hold the copper windings **1506**C in place in the stator iron **1502**C. In some embodiments, stator laminations may be comprised of stator iron **1502**C. Stator laminations may aid in insulating the core and reducing eddy currents or losses. In some embodiments, a stator assembly may include a cavity filled with oil that is posited around the stator to aid in cooling. Such a cavity may be fluidically coupled to a heat exchanger, as described herein.

FIGS. **16**A-C possess like numerals and refer to similar elements of the rotor assemblies **1600**A and **1600**B. As such, similar design considerations and configurations may be considered throughout the embodiments.

Disclosed embodiments of an electric motor assembly may include a rotor. In some embodiments, the electromagnetic field produced by a stator in an electric motor assembly may drive a rotation of a rotor about an axis.

FIGS. **16**A-B are illustrations of an exploded view and cross-section of rotor assemblies of a VTOL aircraft, consistent with disclosed embodiments. FIG. **16**A illustrates an exemplary exploded view of a rotor. Rotor assembly **1600**A may comprise a rotor **1602**A including a rotor hub **1604**A. In some embodiments, rotor hub **1604**A may be machined and comprised of aluminum. Rotor **1602**A may include laminations **1606**A and Halbach array **1608**A. Laminations **1606**A may have a thermal interference fit to rotor hub **1604**A. Rotor **1602**A may be enclosed by rotor overwrap **1610**A. In some embodiments, rotor overwrap **1610**A may be comprised of carbon fiber. Halbach array **1608**A may include magnets. Rotor overwrap **1610**A may abut Halbach arrays **1608**A and apply pressure on the magnets of Halbach array **1608**A. In some embodiments, rotor **1602**A may include hollow portions. Hollow portions of the rotor may allow for various motor assembly or gearbox assembly components to travel through the rotor **1602**A, enabling configurations that may couple components to the rotor **1602**A. In some embodiments, an electric motor assembly may be mechanically coupled to a gearbox assembly. Disclosed embodiments include various means of mating a rotor and sun gear. Rotor **1602**A may be mechanically coupled to sun gear **1612**A and affixed concentrically by various means of connecting and aligning components. Rotor **1602**A may be mechanically coupled to sun gear **1612**A by various fastening means. As an example, rotor **1602**A may be fastened to sun gear **1612**A using locking nuts **1620**A, dowel pins, or screws **1622**A. Bearing **1616**A may have an interference fit with rotor assembly **1602**A and sun gear **1612**A. In some embodiments, sun gear **1612**A may include gear teeth **1614**A, which may be used in a gearbox assembly as described herein. Sun gear **1612**A may comprise a hollow center. In some embodiments, a sun gear **1612**A may be mechanically coupled to an oil sleeve **1618**A that may assist in distributing cooling or lubricating liquid using centrifugal force during rotation.

FIG. **16**B illustrates an additional view of a rotor assembly **1600**B. As described herein, rotor **1602**B may include rotor hub **1604**B, lamination stack **1606**B, and Halbach array **1608**B. Rotor overwrap **1610**B may abut Halbach array **1608**B and enclose stator assembly **1602**B. Bearing **1616**A may include an inner race and outer race. In some embodiments, sun gear **1612**B may be mechanically coupled with rotor **1602**B. Some embodiments may include mechanically coupling the sun gear **1612**B and rotor **1602**B using screws **1622**B. Bearing **1616**B may assist with mechanically coupling rotor **1602**B and sun gear **1612**B by providing an interference fit. In some embodiments, a main shaft of the electric engine assembly may travel through the bearing **1616**B, and thus through the sun gear **1612**B and rotor **1602**B. Further, some embodiments may include the bearing **1616**B serving to support the rotor **1602**B, and rotor hub **1604**A, with any loads experienced by the rotor **1602**B or rotor hub **1604**B during normal operation. In some

embodiments, the inner surface of the rotor assembly **1602**B may possess a diameter equal to the outer race of bearing **1616**B. Sun gear **1612**B may include gear teeth **1614**B. In some embodiments, rotor assembly **1612**B and sun gear **1612**B may be substantially aligned along a central axis **1624**B.

As described herein, disclosed embodiments of an electric propulsion system may include a motor assembly and gearbox assembly. In some embodiments, a gearbox assembly may comprise torque paths that may exert loads. As described herein, an electric propulsion system may include a gearbox assembly and a rotor of an electric motor assembly, both of which may exert loads on a shaft. For example, gyroscopic effects due to the spinning rotor being in motion may exert moment loads. The moment loads may be on a centralized path of the shaft. A gearbox assembly, which may include planetary gears, may share torque through several paths, so the sharing of loads may be dependent on tolerances of components within the electric engine. As such, solutions that support loads and resist moments created by generated torque while maintaining a low mass and drag profile may be advantageous.

Disclosed embodiments may include a bearing system comprising a rotor utilizing a bearing to support loads. FIG. **16**C illustrates a cross-sectional view of an exemplary embodiment of a rotor assembly, consistent with embodiments of the present disclosure. In some embodiments, a rotor assembly may include a bearing system **1600**C. Bearing system **1600**C may include a rotor hub **1604**C, sun gear **1612**C, and main shaft **1626**C. Bearing system **1600**C may use various types of bearings to reduce loads experienced by components substantially aligned along a shaft. As described herein, a rotor assembly may be mechanically coupled to a sun gear **1612**C. Main shaft **1626**C may comprise outer surface **1628**C, which may abut shaft flange assembly **1630**C. Shaft flange **1630**C may abut bearing **1634**C. Bearing **1634**C may have an inner race mechanically coupled to the main shaft **1626**C and outer race mechanically coupled to rotor hub **1630**C. In some embodiments, bearing **1634**C may have an inner race mechanically coupled to the main shaft **1626**C and outer race mechanically coupled to rotor hub **1630**C and the sun gear **1612**C. In some embodiments, bearing **1634**C may abut both rotor hub **1604**C and sun gear **1612**C. Bearing **1634**C may be mechanically coupled to shaft flange assembly **1630**C. As described herein, bearing **1634**C may support rotor hub **1604**C and support loads from rotor hub **1604**C. For example, the rotation and motion of rotor hub **1604** may cause gyroscopic effects that exert a load. Bearing **1634**C may support loads including radial or axial rotor loads. Bearing **1634**C may allow sun gear **1612**C to float, which may allow the variation in loads to be absorbed. In some embodiments, bearing **1634**C may be a rolling element bearing. For example, bearing **1634**C may include rolling element **1616**C, which may be immersed in lubricant **1632**C within bearing **1634**C. In some embodiments, lubricant **1632**C may comprise oil. Other bearings, such as a ball bearing or deep groove ball bearing, capable of support loads and high speeds of rotations, may be used.

Disclosed embodiments of an electric propulsion system may also include a pilot system for bearings to support a rotor. As disclosed herein, an electric propulsion system may include a bearing that supports a sun gear and rotor. A bearing supporting a rotor may comprise a bearing with an outer race mechanically coupled to an inner surface of a rotor. For example, bearing **1634**C may comprise outer race mechanically coupled to rotor hub **1604**C. Bearing **1634**C may pilot sun gear **1612**C and rotor hub **1604**C, by guiding an alignment or mating of multiple components. For example, a pilot may serve to align or mate the sun gear **1612**C and rotor hub **1604**C. Bearing **1634**C may support an edge of sun gear **1612**C and an edge of rotor hub **1604**C to rest on outer race, which may concentrically affix sun gear **1612**C and rotor hub **1604**C. A first edge of sun gear **1612**C and a first edge of rotor hub **1604**C may abut and meet on the outer race of bearing **1634**C. Bearing **1634**C may influence the diameter of sun gear **1612**C and rotor. The diameter of outer race of bearing **1634**C may be substantially similar to a diameter of an inner surface of sun gear **1612**C and an inner diameter of a rotor. In some embodiments, rotor hub **1604**C and sun gear **1612**C may be concentrically affixed. Sun gear **1612**C may have a diameter equal to an inner diameter of a rotor. In some embodiments, a pilot system for bearings may include shoulders. A shoulder may be an edge of a component that abuts one or more edges of another component. For example, shoulders may comprise a portion of the sun gear **1640**B that abuts one or more edges of bearing **1616**B, and a portion of the rotor hub **1642**B that abuts one or more edges of bearing **1616**B. Shoulders may cooperate to restrict movement of a bearing. For example, shoulders may cooperate to restrict movement of bearing **1616**B in an axial direction of the shaft or along the axis **1624**B. In some embodiments, a pilot may include shoulders to capture a bearing radially. A pilot system may reduce mass and prevent the need for additional materials. In some embodiments, dowel pins may be used to pilot a sun gear and rotor.

In some embodiments, a rotor bearing system may also include bearings to resist moment loads and allow float to compensate for tolerances in a gearbox. A rotor bearing system may include a hydrodynamic bearing. A hydrodynamic bearing may resist, or counteract, rotor moment loads. In some embodiments, a hydrodynamic bearing may be positioned along a sun gear. For example, a hydrodynamic bearing may be located between a sun gear **1612**C and main shaft **1626**C, and the hydrodynamic bearing may be located in a position along the length of the sun gear **1612**C. In some embodiments, the hydrodynamic bearing may extend along the full length of the sun gear **1612**C. The hydrodynamic bearing may be positioned where a main shaft **1626**C has a shoulder, or cavity, as described herein. For example, the hydrodynamic bearing may comprise fluids between a sun gear **1612**C and a shoulder, or cavity, of a main shaft **1626**C. In some embodiments, the size or shape of the shoulder may be determined by properties of the rotor. For example, the shoulder may have a depth and width which may be determined by properties of the rotor including mass, speed, rate of change, and change in axis or loads (including gyroscopic, axial, and radial loads or moments). The hydrodynamic bearing may comprise fluids, such as oil, located between a sun gear **1612**C and the outer surface **1628**C of a main shaft **1626**C. The hydrodynamic bearing may assist in resisting moment loads experienced by sun gear **1612**C. For example, the hydrodynamic bearing may exert a restoring force to resist gyroscopic loads. In some embodiments, hydrodynamic bearing may comprise oil. The hydrodynamic bearing may allow sun gear **1612**C or a ring gear to float. The hydrodynamic bearing may allow for tolerances within various components of the electric propulsion system. The hydrodynamic bearing may comprise the same liquid, such as oil, that is used throughout the electric propulsion system for lubrication and cooling. As discussed herein, utilizing a single liquid for hydrodynamic bearings, cooling, and lubricating may provide advantages of reducing mass and reducing the size of various components.

FIG. **50** illustrates a perspective view of an exemplary rotor of a VTOL aircraft, consistent with disclosed embodiments. In some embodiments, a rotor **5000** may comprise a rotor hub **5002**. A rotor hub **5002** may possess layers **5004** and **5012**. A rotor **5000** may be manufactured to include a rotor hub **5002** and layers **5004** and **5012**. A rotor **5000** may be made of aluminum, steel, or other material capable of transferring torque to a propeller assembly. A rotor **5000** may be machined from a single piece of material using various types of machinery such as a lathe, a computer numerical control ("CNC") machine, or any other type of machine capable of machining a rotor. A layer **5004**, **5012** may be present on the rotor **5000** for the purpose of being sacrificed later to balance the rotor **5000**. A rotor **5000** may be unbalanced due to manufacturing constraints, such as the precision of the machine, during the machining of the rotor. In some embodiments, balancing a rotor **5000** may include adding or removing mass from the rotor.

In some embodiments, the manufacturing constraints of the various areas of the rotor **5000** may determine the mass of the layer **5004**, **5012**. For example, layer **5004**, **5012** may have a certain minimum or maximum mass that is dictated by manufacturing equipment and steps of creating the rotor. Layer **5004**, **5012** may include a mass of rotor material that is sized with a magnitude capable of countering the manufacturing constraints present in each area of the rotor. In some embodiments, the mass of the layer **5004**, **5012**, to later be removed in balancing the rotor, may be determined based on the precision of the machine(s) manufacturing the various portions of the rotor. For example, in some embodiments a machine or machines may manufacture portions of the rotor with a precision of +/−5% of the target mass of the portion of the rotor. In such an example, the rotor may include a layer **5004**, **5012** with an overall mass that includes enough mass to be removed in balancing a rotor with a mass falling within the compounded deviated mass due to the precision of the machine(s) manufacturing the rotor. In some embodiments, the material properties of the layer **5004**, **5012** may include aluminum, steel, or another other material capable of accommodating the manufacturing precision of the machine(s) manufacturing the portions of the rotor. In some embodiments, the thickness, or width, and depth of layer **5004**, **5012** may be thicker or thinner depending on design considerations, the needs of the system, and manufacturing constraints. In some embodiments, various layers may have substantially similar widths and depths, where substantially similar comprises difference in the widths or depths of the layers being less than 5% of the greater widths or depths.

In some embodiments, a rotor **5000** may include multiple layers **5004**, **5012**. For example, a rotor **5000** may include a layer **5004** on the edges of an inner surface, or circumference, of the rotor hub **5002**, as shown in FIG. **50**. In some embodiments, a rotor **5000** may possess multiple layers **5004**, **5012** that are disposed on opposing sides of the inner surface of the rotor, next to each other along an inner surface, or any other configuration of layers **5004**, **5012** along the of the rotor hub **5002**. In some embodiments, the layers **5004**, **5012** may be posited along an inner surface of the rotor a distance from the edge of the rotor. Some embodiments may include the layers being a substantially similar distance from the edge of the rotor. As used herein, a substantially similar distance may comprise a variation in distance less than 5% of the larger distance.

In some embodiments, a layer **5004**, **5012** may include grooves **5006** creating portions **5008**. In some embodiments, the portions may be made of aluminum. Further, some embodiments may include grooves **5006** that may be made of aluminum. In some embodiments, grooves **5006** may serve to act as a liquid flow path for oil or other liquid that is present within the electric motor assembly. For example, in normal operation, as described herein, oil or liquid may be circulated throughout an electric motor assembly to assist in cooling or lubricating components. As such, grooves **5006** may act to allow oil or liquid to pass through the layers **5004**, **5012** so that oil or liquid does not gather within the layers **5004**, **5012** and is returned to the sump or other reservoir as described herein. In some embodiments, the multiple layers **5004** may be aligned such that the grooves **5006** of each layer are aligned.

In some embodiments, a rotor **5000** may comprise through-holes **5010**. In some embodiments, a rotor **5000** may be machined with through-holes **5010**. Those of ordinary skill in the art will appreciate that mass is a critical factor in aircraft design, and particularly in VTOL aircrafts design. Mass may impact the efficiency, payload, and flight time of a VTOL aircraft. As such, some embodiments of a rotor may include through-holes **5010**, produced by a machining process, lasering process, or any other process of removing mass from a rotor. Through-holes **5010** may reduce the mass of a rotor **5000** by removing sections of the rotor hub **5002** material, such as aluminum. In some embodiments, through-holes may also serve as connection points for a sun gear as discussed above.

In some embodiments, an electric motor assembly of a VTOL aircraft, as described herein, may generate torque by rotating a rotor **5000** at high rates of rotation. At high rotational speeds, an unbalanced rotor having an axis of rotation that does not align with the center of mass of the rotor will experience high levels of unwanted vibration and noise. An unbalanced rotor may result from production tolerances of the manufacturing processes. For example, magnets present in the rotor assembly may not have a uniform mass and may not be uniformly placed along the rotor or lamination stack. Further, in some embodiments, through-holes **5010** may be produced using machining process and production tolerances may lead to an unbalanced rotor. As such, it is recognized that a process for balancing a rotor may be advantageous. It is also recognized that mass may be a critical design criteria in VTOL aircrafts and as such, traditional rotor balancing techniques that involve adding mass to the rotor or removing a minimal amount of mass may lead to unwanted mass remaining on the rotor. In some embodiments, processes may be used to balance a rotor while achieving a maximum reduction in the mass of the rotor.

Some disclosed embodiments may comprise an improved process for balancing a rotor of an electric motor assembly. Some embodiments may include identifying an axis of rotation of a rotor. As discussed herein, a rotor **5000** may include a layer **5004**, **5012**. In some embodiments, the layers **5004**, **5012** serve as a sacrificial layer that may be machined to be integral with the rotor to later be removed from the rotor **5000** to achieve a balanced rotor. In some embodiments, the portions **5008** may serve as sacrificial portions that may be machined with the rotor to later be removed from the rotor **5000** to achieve a balanced rotor. It is recognized that removable layers and portions added to the rotor after the rotor is manufactured, via fasteners, glue, or similar materials, could serve a similar purpose as a sacrificial layer or sacrificial portion. However, removable layers and portions would require additional mass in the form of attachments that would not be advantageous to a VTOL's overall efficiency. Further, the attachments used for remov-

able layers and portions, such as fasteners and adhesives, are at risk of failing during flight and may damage other components of the electric propulsion system.

Some embodiments of a process for balancing a rotor may comprise determining an imbalance present in the rotor by rotating the rotor about the axis of rotation. Determining an imbalance may include rotating the rotor and detecting a phase, and respective magnitude, of the imbalance. Some embodiments may include marking the rotor by laser etching the rotor, placing a reflective sticker on the rotor, or any other method of creating a distinctive mark on the rotor. In some embodiments, rotating the rotor may include using a machine to spin the rotor about the axis of rotation at a speed less than operating speed, such as a dynamic balancer. Operating speed may include the expected rate of rotation of the rotor for any phase of flight. In some embodiments, rotating the rotor may include rotating the rotor at a speed less than the first resonance of the rotor. Detecting a phase of an imbalance may include using a machine to monitor the distinctive mark of the rotor while in rotation. In some embodiments, the machine to monitor the rotation of the rotor may be the same machine that may rotate the rotor. The machine may be able to track the distinctive mark and calculate a displacement of the mark during rotation, indicating an imbalanced rotor. In some embodiments, detecting a phase of an imbalance may also include receiving signals from an encoder or accelerometer during the rotation, or downloading after the rotation, to identify the position of the rotor or forces experienced by the rotor in the position where the encoder, accelerometer, or a similar sensor is positioned on the rotor.

Some embodiments of a process for balancing a rotor may comprise calculating an amount of mass to add or remove at a position along the layer **5004**, **5012** to correct an imbalance present in the rotor. Some embodiments may include a machine or algorithm that analyzes the phase, and respective magnitude, of the imbalance to determine amount of mass to add or remove and position for the mass to be added to or removed from. In some embodiments, a machine that calculates the mass to be added or removed may include the machine that is rotating the rotor, detecting the imbalance, or may be a separate machine. In some embodiments, the mass to be added or removed at a position along the layer **5004**, **5012** may alter the center of mass of the rotor such that it coincides with the axis of rotation of the rotor. In some embodiments, a rotor may possess multiple layers **5004**, **5012** posited along an inner surface of the rotor a distance from the edge of the rotor. As such, balancing the rotor may include balancing the rotor among one or more planes of the rotor by adding or removing mass along one, or along more than one, of the layers.

In some embodiments, removing an amount of mass from the layer **5004**, **5012** may include machining away a portion of the volume of the layers **5004**, **5012**. In some embodiments, removing an amount of mass from the layers **5004**, **5012** may include removing anywhere from 50% to 100% of the volume of the layers **5004**, **5012**. Removing 50% to 100% of the volume of the layers **5004**, **5012** may reduce the mass of the rotor. In some embodiments, layers **5004**, **5012** may only be present to be sacrificial material in balancing the rotor. Layers **5004**, **5012** may be integrally formed with the rotor, to provide integrated rotor balancing material that is removed, rather than added. By removing sacrificial rotor material, a balancing process would not require the use of adhesives or fastening methods to add balancing weight.

In some embodiments, after removing material from the layers **5004**, **5012**, an amount of mass of the layers remaining on the rotor may be the minimal amount of mass required to balance the rotor, and thus may result in a balanced rotor with a minimized mass. Removing majority of the volume of the layers present on the rotor may allow for a reduction in mass of the rotor such that the rotor contains no additional material. For example, if a rotor with layers **5004**, **5012** was determined to be balanced without removing any portion of the layers **5004**, **5012**, 100% of the volume comprising the layers **5004**, **5012** may be machined away as none of the mass from the layers would be needed to balance the rotor. In some embodiments, it may be determined that 3% of the volume of layer **5004** would need to be present to balance in rotor. In such an example, 100% of layer **5012** may be removed and 97% of layer **5004** may be removed to balance the rotor.

Some embodiments may include utilizing specific machinery to remove the volume of layers **5004**, **5012** in balancing the rotor. Some embodiments may include utilizing machinery capable of the volumes of layers **5004**, **5012** at a precision of 0.01% to 0.1% of the layer. In some embodiments, machinery may be used in machining away the volume of the layers, such as a lathe or a CNC machine, at a resolution less than five microns. In such embodiments, using machinery capable of such precision may achieve the advantages of a balanced rotor having minimal mass. Some embodiments may include utilizing various types of machinery when removing the layers, such as removing a large fraction of the mass to be removed with a method with less precision than the method to remove the remaining amount of the mass to be removed.

Some embodiments may include calculating an amount of mass to be added at a position along the layers **5004**, **5012** to balance to the rotor, and balancing the rotor may include machining away the volume of the layers **5004**, **5012** such that only an amount of mass of the layers remaining is a portion of the layers **5004**, **5012** that is equal to the amount of mass that was calculated to be added and present at the calculated position. In some embodiments, calculating an amount of mass to be removed at a position along the layers **5004**, **5012** to balance the rotor may include machining away the volume of layers **5004**, **5012** such that only an amount go mass of the layers remaining is a portion of the layers **5004**, **5012** that is equal to the amount of mass that was calculated to be removed and present at a position on the opposite side of the layer from the calculated position.

In some embodiments, calculating an amount of mass to be removed may include calculating a number of sacrificial portions **5008** to remove. In some embodiments, the portions **5008** may be defined by grooves **5006**. Some embodiments may include removing full portions **5008** or any partial amounts of portions **5008**. In some embodiments, removing portions **5008** may include calculating a maximum amount of portions to be removed to achieve a balanced rotor. In some embodiments, the number k of portions to be removed may include an amount of portions such that if any additional mass were to be removed from the rotor after k portions are removed, the rotor may never be able to achieve balance.

FIG. **51** illustrates a flow chart of an exemplary process for balancing a rotor of a VTOL aircraft **5100**, consistent with disclosed embodiments. While the block diagram may be described below in connection with certain implementation embodiments presented in other figures, those implementations are provided for illustrative purposes only, and are not intended to serve as a limitation on the block diagram.

FIG. **51** includes process blocks **5102** to **5108**. At block **5102**, a process for balancing a rotor of an electric engine of an electric propulsion system may include identifying an axis of rotation of a rotor, wherein the rotor comprises a sacrificial layer having a mass M formed along a circumference of the rotor, consistent with the discussion throughout this disclosure.

At block **5104**, a process for balancing a rotor of an electric engine of an electric propulsion system may include determining an imbalance present in the rotor by rotating the root about the axis of rotation, consistent with the discussion throughout this disclosure.

At block **5106**, a process for balancing a rotor of an electric engine of an electric propulsion system may include calculating an amount of mass k to add at a position p along the sacrificial layer such that the center of mass of the rotor coincides with the axis of rotation of the rotor, consistent with the discussion throughout this disclosure.

At block **5108**, a process for balancing a rotor of an electric engine of an electric propulsion system may include removing an amount of mass r from the sacrificial layer such that an amount of remainder mass n is present along the circumference of the rotor, consistent with the discussion throughout this disclosure.

As discussed herein, a rotor assembly of an electric motor assembly may comprise a rotor mechanically coupled to a sun gear. Similar to the discussion above with respect to balancing a rotor, it may be advantageous to balance the rotor assembly to avoid unwanted vibrations and noise during normal operation. A rotor assembly may be unbalanced due to manufacturing tolerances and due to the multiple mating parts throughout the rotor assembly.

In some embodiments, a process for balancing the rotor assembly may include identifying an axis of rotation of the rotor assembly and rotating the rotor assembly at speeds less than operating speed. In some embodiments, the rotor assembly may be coupled to a machine that may be capable of rotating the rotor assembly at speeds less than operating speed. In some embodiments the rotor assembly may be rotated at a speed less than the first resonance of the rotor assembly. Some embodiments may include determining an imbalance present in the rotor assembly. Determining an imbalance present in the rotor assembly may include using a machine to identify a phase, and magnitude, of the imbalance by tracking a distinctive mark on the rotor assembly, such as a reflective sticker or laser etched mark, or using an electric eye, encoder, accelerometer, or a similar component to track the motion of the rotor assembly.

Some embodiments may include calculating an amount of mass to add to the rotor assembly such that the center of mass of the rotor assembly coincides with the axis of rotation of the rotor assembly. Calculating an amount of mass, and its respective position, may be done using a machine or algorithm that analyzes the phase and magnitude of the imbalance in various planes of the rotor assembly to determine an amount of, and position of, mass to be added to the rotor assembly. In some embodiments, the mass to be added may be in the form of rivets. Rivets may include masses that may be removably attached or permanently affixed to the through-holes **5010** of rotor **5000**. Rivets may be made of aluminum, copper, steel, or any other material capable of balancing the rotor assembly. Adding rivets may include permanently affixing or removably attaching rivets to the rotor via through-holes such that the rotor assembly is balanced. In some embodiments, the amount of mass to be added may include rivets possessing different material properties and positions.

FIG. **52** illustrates another flow chart of an exemplary process for balancing a rotor assembly of a VTOL aircraft **5200**. While the block diagram may be described below in connection with certain implementation embodiments presented in other figures, those implementations are provided for illustrative purposes only, and are not intended to serve as a limitation on the block diagram.

As shown in FIG. **52**, the process may begin at block **5202**, by identifying an axis of rotation of a rotor, wherein the rotor comprises a sacrificial layer having a mass M formed along a circumference of the rotor, consistent with the discussion throughout this disclosure.

At block **5204**, a process for balancing a rotor assembly may proceed to determining an imbalance present in the rotor by rotating the rotor about the axis of rotation, consistent with the discussion throughout this disclosure.

At block **5206**, a process for balancing a rotor assembly of an electric engine of an electric propulsion system may include calculating an amount of mass k to add at a position p along the sacrificial layer such that the center of mass of the rotor coincides with the axis of rotation of the rotor, consistent with the discussion throughout this disclosure.

At block **5208**, a process for balancing a rotor assembly may proceed to include removing an amount of mass r from the sacrificial layer such that an amount of remainder mass n is present along the circumference of the rotor, consistent with the discussion throughout this disclosure.

At block **5210**, a process for balancing a rotor assembly may proceed to identifying an axis of rotation of a rotor assembly, wherein the rotor assembly comprises the rotor mechanically coupled to a sun gear, consistent with the discussion throughout this disclosure.

At block **5212**, a process for balancing a rotor assembly may proceed to determining an imbalance present in the rotor assembly by rotating the rotor about the axis of rotation, consistent with the discussion throughout this disclosure.

At block **5214**, a process for balancing a rotor assembly may proceed to calculating a number j of rivets to add to the rotor assembly such that the center of mass of the rotor assembly coincides with the axis of rotation of the rotor assembly, consistent with the discussion throughout this disclosure.

At block **5216**, a process for balancing a rotor assembly of an electric engine of an electric propulsion system may include adding the j rivets to the rotor assembly, consistent with the discussion throughout this disclosure.

Disclosed embodiments of an electric propulsion system may include a gearbox assembly, as described herein. A gearbox may assist in a gear reduction for an electric propulsion system. Some embodiments of an electric propulsion system may include a gearbox assembly located between the electric motor assembly and the end bell assembly, as described herein. A gearbox assembly may comprise a main shaft assembly.

FIG. **17** is an exploded view of a main shaft assembly of a VTOL aircraft, consistent with disclosed embodiments. Main shaft assembly **1700** may include a main shaft **1702**, carrier cover **1714**, planetary gears **1704**, pump drive gear **1716**, and planetary carrier **1712**. Main shaft assembly **1700** may include compound planetary gears, such that planetary gears **1704** are mechanically coupled to planetary gears **1706**. In some embodiments, shafts **1708** and **1710** may extend from planetary gears **1704**. In some embodiments, shafts **1708** and **1710** may extend from a first planetary gear **1704** and a second planetary gear **1706**, respectively. Planetary gears **1704** may interface with a sun gear and a ring

gear. In some embodiments, the ring gear may be fixed. In such an embodiment, the planetary gears **1704**, interfacing with the ring gear and sun gear, may rotate about the sun gear. In some embodiments, planetary gears **1706** may interface with a ring gear. In such an embodiment, the planetary gears **1704** may interface with a sun gear while the planetary gears **1706** interface with a fixed ring gear where the sun gear would drive planetary gears **1704** and **1706** to rotate about the sun gear. Planetary carrier **1712** may be mechanically coupled, via shaft **1710** or the like, to planetary gears **1704** and **1706** such that when a planetary gear, and thus the corresponding shaft **1710**, rotates around the circumference of the sun gear, the planetary carrier **1712** rotates at the same speed. Planetary carrier **1712** may be mechanically coupled to multiple planetary gears **1704** and **1706**. In some embodiments, a carrier cover may be mechanically coupled, via shaft **1708** or the like, to planetary gears **1704** and **1706** such that when a planetary gear, and thus the corresponding shaft **1708**, rotates around the circumference of the sun gear, the carrier cover **1714** rotates at the same speed.

In some embodiments, a main shaft assembly **1700** may comprise a planetary carrier **1712** having bearings **1722** to assist the planetary carrier **1712** in receiving shafts **1710**. Bearings **1722** may allow the shafts **1710** to rotate with the planetary gears **1704**, **1706** while allowing the shafts to be housed within the planetary carrier **1712**. In some embodiments, a carrier cover **1714** may have bearings **1718** to assist the carrier cover **1714** in receiving shafts **1708** such that the shafts **1708** may rotate with planetary gears **1704**, **1706** while allowing the shafts **1708** to be housed within the carrier cover **1714**. In some embodiments, washers **1720**, **1724** may be positioned between the planetary gears **1704**, **1706** and the carrier cover **1714** and planetary carrier **1712**, respectively. Washers **1720**, **1724** may be designed to account for machine tolerances in the manufacture of components throughout the gearbox assembly, or provide the planetary gears **1704**, **1706** with a surface to rotate against without damaging the planetary carrier **1712** or carrier cover **1714**. Some embodiments may include mechanically coupling the planetary carrier **1712** and carrier cover **1714** using screws **1728** or similar components.

In some embodiments, a carrier cover **1712** may be mechanically coupled to the main shaft **1702**. In such an embodiment, a rotation of the main shaft would rotate at the same speed as the carrier cover and, thus, the same speed of the planetary gears **1704** or compound planetary gears **1704** and **1706**. In some embodiments, a planetary carrier may be mechanically coupled to the main shaft **1702**. In such an embodiment, a rotation of the main shaft would rotate at the same speed as the planetary carrier **1712** and, thus, the same speed of the planetary gears **1704** or compound planetary gears **1704** and **1706**.

In some embodiments, a main shaft assembly **1700** may include a pump drive gear **1716**. A pump drive gear may be disposed between a planetary carrier **1712** and carrier cover **1716**. Further, in some embodiments, a pump drive gear **1716** may be disposed between the multiple planetary gears comprising a compound planetary gear **1704**, **1706**. A pump gear drive **1716** may be mechanically coupled to various components present within the gearbox assembly, including the planetary carrier **1712**, planetary gears **1704**, **1706**, or the carrier cover **1714**. A pump drive gear **1716** may interface with other components, not pictured here, within the electric engine assembly to circulate oil or other coolant liquids throughout liquid flow paths, as described herein, in an effort to cool or lubricate components present within an electric engine assembly. For example, a pump drive gear **1716** may interface with a pump gear that acts to draw liquid from a sump to a heat exchanger. In such an embodiment, the speed of rotation of the pump gear drive **1716** may determine the speed at which oil or other liquid is circulated throughout the electric engine assembly. In some embodiments, the pump drive gear **1716** may be mechanically coupled to the main shaft **1702** such that the pump drive gear rotates at the speed of the main shaft **1702**. In some embodiments, main shaft assembly **1700** may comprise dowel pins **1726**, or similar alignment components, that serve to align the pump drive gear with various components of the main shaft assembly **1700**, including the planetary carrier **1712** or carrier cover **1714**.

As described herein, an electric motor assembly may drive the rotation of a rotor. The rotation of a rotor, which may be mechanically coupled to a sun gear, may rotate the sun gear at rotor speed. The sun gear rotating at rotor speed may interface with planetary gears **1704** or compound planetary gears **1704** and **1706** to generate an output of the gearbox assembly comprising a new value of torque to be supplied to a propeller assembly. In some embodiments, the combination of using a sun gear, planetary gears, including compound planetary gears, and a ring gear, as described herein, may produce a gear reduction. Those of ordinary skill in the art would understand that a gear ratio can be calculated from the gears present in the gearbox assembly. As such, properties of the gears within the gearbox assembly may determine the gear reduction available in the electric propulsion system. In some embodiments, a gear reduction value may be a relevant design criteria for VTOL aircrafts as an aircraft may require a specific value to torque to be applied to the propeller assembly to accomplish providing lift for payloads. However, it should be understood that increasing gear size to create a larger gear reduction would result in an increase in electric engine drag profile and mass. As such, embodiments as described herein may provide optimized electric propulsion system design in terms of drag profile and mass versus payload capabilities.

As described herein, embodiments of a gearbox assembly may include a sun gear. FIG. **18** is an illustration of an exemplary sun gear of a VTOL aircraft, consistent with disclosed embodiments. Sun gear **1800** may be comprised of stainless steel, plastic, or any material capable of assisting in a gear reduction. Sun gear **1800** may include teeth **1802** to assist in a gear reduction. Some embodiments may include splined teeth. In some embodiments, the gear teeth **1802** may interact with planetary gears. Sun gear **1800** may include a hollow center. In some embodiments, components of a gearbox may travel through hollow portions of sun gear **1800**. Sun gear **1800** may also include through holes **1804** to assist in fastening the sun gear **1800** to other components of the electric engine. In some embodiments, the sun gear **1800** may be mechanically coupled to other components of the electric engine assembly, such as a rotor of the electric motor assembly or an output shaft. Some embodiments may include the through holes **1804** allowing for such a mechanical coupling. In some embodiments, the sun gear **1800** may be fixed and as such may not rotate. In such an embodiment, the planetary gears and ring gear may be free to rotate. Some embodiments may include the through holes **1804** being fastened to another component or surface to restrict the rotation of the sun gear **1800**.

Embodiments of a gearbox may include a ring gear. FIG. **19** is an illustration of an exemplary ring gear of a VTOL aircraft, consistent with disclosed embodiments. Ring gear **1900** may include teeth **1902**. Teeth **1902** may interface with

one or more planetary gears to assist in a gear reduction. Ring gear **1900** may be fixed or free to rotate. A fixed ring gear may be held stationary, allowing planetary gears to rotate around the sun gear. In some embodiments, a ring gear may be fixed by coupling the ring gear to various components or structures within the electric propulsion system using through-holes **1904**. In other embodiments, a free ring gear may rotate around fixed planetary gears or a fixed sun gear. Ring gear **1900** may include slots **1902** to assist in fastening or mechanical coupling.

As described herein, embodiments of a gearbox assembly may include a planetary carrier assembly. FIG. **20** is an illustration of an exemplary carrier assembly of a VTOL aircraft, consistent with disclosed embodiments. In some embodiments, carrier assembly **2000** may include a planetary carrier **2008**, first planetary gear **2006**, pump drive gear **2012**, second planetary gear **2004**, and carrier cover **2010**. In some embodiments, the planetary carrier **2008**, first planetary gear **2006**, pump drive gear **2012**, second planetary gear **2004**, and carrier cover **2010** may rotate about a central axis **2016** or a shaft **2002**. One or more planetary gears of carrier assembly **2000** may be substantially aligned along a shaft **2014** or central axis **2018**, forming a set of compound planetary gears. For example, first planetary gear **2006** and second planetary gear **2004** may share shaft **2014** and be coaxial along central axis **2018**. Carrier assembly **2000** may include shaft **2002**. Shaft **2000** may be coaxial along a central axis **2016**. In some embodiments the planetary carrier **2008**, first planetary gear **2006**, pump drive gear **2012**, second planetary gear **2004**, carrier cover **2010**, and shaft **2002** may be mechanically coupled such that the components all rotate at the same rate. In some embodiments the shaft **2002** may be mechanically coupled to a propeller assembly such that the shaft transfers torque or mechanical shaft power to the propeller assembly. In some embodiments, carrier assembly **2000** may include cavities, ports, or holes to assist in distribution of a coolant such as oil.

In some embodiments, an electric engine may include an inverter assembly. An inverter assembly may include circuitry configured to receive input of a direct current, convert the direct current to an alternating current, and provide the alternating current to the stator ring of an electric motor.

As disclosed herein, embodiments of an electric engine assembly may include a thermal management system or cooling system that may circulate a coolant or lubricant throughout the engine. A lubricant or coolant, such as oil, may reside in a sump and may be distributed to components throughout the electric engine assembly. As disclosed herein, oil may travel from a sump to a heat exchanger, to various locations in the electric engine assembly, including an inverter assembly, a gearbox assembly, and an electric motor assembly. As described herein, an electric motor assembly may include an end bell assembly. In some embodiments, an end bell assembly may abut an inverter assembly.

FIGS. **21**A-B are illustrations of an exemplary end bell assembly of a VTOL aircraft, consistent with disclosed embodiments. FIG. **21**A illustrates an internal view of an end bell plate of an end bell assembly. End bell plate **2100**A may comprise a plate **2102**A made of aluminum, steel, or another other type of thermally conductive material. End bell plate **2100**A may include pump rotor **2104**A and a passage rotor **2106**A. A passage rotor **2106**A may be sized such that a pump rotor **2104**A may be able to rotate within the passage rotor **2106**A such that multiple areas are open around the pump rotor **2104**A while it is rotating within **2106**A. A pump rotor **2104**A may be positioned within a passage rotor **2106**A. A pump rotor **2104**A may be mechanically coupled to, and have a rotation driven by, another component of the electric engine assembly, such as a pump gear **2114**B. In some embodiments, a pump rotor **2104**A and a passage rotor **2106**A may correspond to a gerotor, with an inner and outer rotor, or positive displacement pump. A pump rotor **2104**A may circulate oil from a sump through a pump inlet **2116**B. In some embodiments, a pump rotor **2104**A may rotate within a passage rotor **2106**A to draw oil from a pump inlet through open areas between the pump rotor **2104**A and passage rotor **2106**A. In some embodiments, a rotation of the pump rotor **2104**A within the passage rotor **2106**A may create a vacuum between the pump inlet **2116**B and the sump containing any liquid. pump outlet **2118**A such that. For example, a pump may create a vacuum to draw oil from the sump to the pump inlet **2116**B. In some embodiments, a pressure differential may be present between the pump outlet **2118**A and the various distribution points of the cooling system, as described herein, such that oil or other liquids may be drawn from the opening between the pump rotor **2104**A and a passage rotor **2106**A to the pump outlet **2118**A and through the cooling system. In some embodiments, an end bell plate **2100**A may include additional, or different, components such as electric pumps or other mechanical configurations to draw oil or other liquid through the pump inlet **2116**B. After entering through the pump rotor **2104**A and passage rotor **2016**A, oil or liquid may travel in a direction **2120**A and may travel from pump outlet **2118**A into a heat exchanger. In some embodiments, a heat exchanger may be mounted to the thermal plate **2100**A or divider plate as discussed herein.

In some embodiments, a heat exchanger may cool oil or other liquid used to lubricate or cool the inverter assembly, gearbox assembly, and/or electric motor assembly. In some embodiments, a certain portion of the cooled oil or liquid leaving the heat exchanger may be directed to the inverter assembly to cool such components or may be directed to a motor-gearbox housing to cool components of the gearbox assembly and/or electric motor assembly. Some embodiments may include different divisions of cooled oil or liquid among the inverter assembly versus the gearbox assembly and electric motor assembly. For example, an inverter assembly may receive 40% of the cooled oil by volume and the motor-gearbox hosing may receive 60%. The ratio may differ depending on the design considerations and requirements of the particular implementation. Indeed, different types of electric propulsion systems as described herein may use different fluid distribution percentages. Further, it should also be understood that tilter electric propulsion systems and lifter electric propulsion systems may possess similar or non-similar distributions of oil from the heat exchanger. The pump corresponding to pump rotor **2104**A and pump gear **2114**B may provide performance improvements to a gearbox assembly. Furthermore, using the pump to drive the transportation of oil to not only a gearbox assembly and electric motor assembly, but also an inverter assembly, may eliminate the need of extra components to transport coolants to the inverter assembly. Such an advantage may reduce the mass and improving the drag profile of an electric propulsion system.

From the heat exchanger, cooled oil may enter channel **2108**A, and travel, in a direction **2114**A, to annulus **2110**A. Annulus **2110** may be aligned along a shaft, as described herein. Annulus **2110**A may include ports **2116**A. Oil from channels **2108**A may travel through ports **2116**A to various components of the electric engine, including to a gearbox assembly and motor assembly, to provide cooling and lubri-

cation. Oil may also travel from annulus **2110**A to channel **2112**A. End bell plate **2100**A may also include ports **2122**A that allow oil or other liquids to be transferred to through the end bell assembly **2100**B. In some embodiments, the pump may create pressure, which may drive the movement of liquids through the end bell plate **2100**A. For example, pressure from the pump, which may be a gerotor or positive displacement pump, may propel the travel of oil in channels **2108**A, **2112**A, annulus **2110**A, ports **2116**A, or other grooves or cavities in the end bell plate that may assist in transport of liquid.

FIG. **21**B illustrates a view of an exemplary end bell assembly. End bell assembly **2100**B may include an end bell plate **2100**. Further, an end bell assembly may include gears that may be driven by, or interact with, additional gears in a gearbox assembly, as described herein. In some embodiments, ring gear **2104**B may be coupled to end bell plate **2102**B assembly. Ring gear **2106**B may include teeth that may interface with additional gears. Teeth of the ring gear **2106**B may interface with planetary gears of a main shaft assembly, as described herein. In some embodiments, teeth of a pump drive gear may interface with teeth of a pump gear **2114**B, such that the rotation of a pump drive gear drives a rotation of a pump gear **2114**B. Pump gear **2114**B may be mechanically coupled to a pump rotor **2104**A, such that rotation of pump gear **2114**B may drive a rotation of pump rotor **2104**A. As a result, pump gear **2114**B may drive the transport of a lubricant or coolant throughout the end bell assembly. In some embodiments, pump gear **2114**B may drive a lubricant or coolant from a sump. End bell **2102**B may include ports **2118**B for drainage of oil from a thermal plate via ports **2122**A.

In some embodiments, end bell assembly **2100**B may comprise an end bell plate **2102**B that serves to seal off an electric motor assembly housing or a motor-gearbox assembly housing. In some embodiments, an end bell assembly **2100**B may comprise a first circular wall extending away from the end bell plate **2102**B. In some embodiments, a ring gear **2106**B may be coupled to the first circular wall **2104**B such that the ring gear **2106**B is not free to rotate, as described herein. In some embodiments, an end bell assembly **2100**B may comprise a second circular wall **2108**B extending away from the end bell plate **2102**B. In some embodiments, the second circular wall **2108**B may possess a diameter that is less than a diameter of the first circular wall **2104**B. A second circular wall **2108**B may housing a bearing **2110**B. In some embodiments, the bearing **2110**B may be mechanically coupled to a shaft, including a main shaft that may transfer mechanical shaft power to a propeller assembly. In some embodiments, bearing **2110**B may include grooves to assist in the transfer of oil or other liquids. The second circular wall **2108**B may also comprise an annulus that includes port holes **2112**B. Port holes **2112**B may aligned with ports **2116**A to receive oil or liquid from the heat exchanger. Port holes **2112**B may comprise a supply of oil or other liquid to cool or lubricate components of the electric motor assembly and gearbox assembly.

In some embodiments, the port holes **2112**B may transfer oil or other liquid to the main shaft. In some embodiments, an outer surface of a main shaft may serve as a liquid flow path where the oil or other liquid flows upon the main shaft and may be distributed to components within the gearbox assembly and/or electric motor assembly.

Disclosed embodiments of an inverter assembly may include an inverter assembly with a heat exchanger. FIG. **22** is an illustration of an exemplary inverter assembly of a VTOL aircraft, consistent with disclosed embodiments. In some embodiments, an inverter assembly **2200** may include an inverter assembly housing **2202** coupled to a thermal plate **2204**. An inverter assembly housing **2202** may serve to house inverter assembly components as discussed herein. An inverter assembly housing **2202**, and thus an inverter assembly **2200**, may possess a substantially circular profile. As used herein a profile may be substantially circular, having a length of a minor axis of a circular shape and a length of a major axis of a circular shape, where the length of the minor axis is at least 80% of the length of the major axis.

In some embodiments, an inverter assembly **2200** may comprise a high voltage connector **2212** and low voltage connectors **2210**. High voltage connector **2212** may have a low profile. High voltage connector **2212** may receive high voltage power from a high voltage power system located elsewhere within the aircraft via high voltage channels. Inverter assembly **2212** may include at least one drain **2208**. Drains **2208** may be configured to allow any oil or liquid present within the inverter assembly to exit the inverter assembly **2200** no matter the orientation of the electric engine assembly. In alternative embodiments, inverter assembly **2200** may also include vents. In some embodiments, an inverter assembly **2200** may comprise a heat exchanger **2206** coupled or mounted to the thermal plate **2204**. In some embodiments, heat exchanger **2206** may be an integrated heat exchanger. In some embodiments, thermal plate **2204** may be welded to heat exchanger **2206**. For an example, thermal plate **2204** may be comprised of aluminum. Assembly of thermal plate **2204** and heat exchanger **2206** may include brazing, quenching, aging, and welding. In some embodiments, thermal plate **2204** and heat exchanger **2206** may be machined from the same material.

Some embodiments may include an inverter assembly wherein the components of the inverter abut one another and may share a common housing. In some embodiments, components of the inverter assembly can be placed on top of one another in a stacked orientation. In some embodiments, components of the inverter assembly can be substantially aligned along a central axis. An inverter assembly may include various components for sensing, circuitry, and controls. FIG. **23** is an illustration of an exploded view of an inverter assembly of a VTOL aircraft, consistent with disclosed embodiments. An inverter assembly **2300** may include a control printed circuit board assembly ("PCBA") **2316**, board spacer assembly **2314**, a gate drive PCBA **2312**, a power PCBA assembly **2310**, housing gasket **2308**, thermal plate assembly **2304**, and heat exchanger **2306**. Components of inverter assembly **2300** may be mechanically coupled by various means of fastening. For example, components of inverter assembly **2300**, including inverter assembly housing **2302**, may be fastened to one another by screws **2318**. Further, an inverter assembly **2300** may include an inverter assembly housing **2302** that may be coupled to thermal plate assembly **2304** to enclose the inverter assembly components and protect them from any liquids, debris, or other material that may be harmful to the inverter assembly components. An inverter assembly housing **2302** may include connections for power and current used by components of the inverter assembly **2300** such as a high voltage connector **2322** and low voltage connectors **2320**.

In some embodiments, the stacked orientation in the housing may conform to various design shapes, for example a circular shape possessing a diameter proportional to that of a motor or gearbox, or any other design shapes. The internal components of the inverter may be arranged to assist in achieving that design goal shape. In some embodiments, a

stacked orientation may be achieved by using common structural components through the stack, for example designing the different levels of the stack such that a common structure, such as various bolts of the same length, can pass through each level to create a stacked orientation.

In some embodiments, using a stacked orientation may create additional obstacles with respect to additional design considerations, such as heat transfer where the difficulty of managing the proper distribution of coolant could increase in such a configuration. Further, using long bolts to travel through various levels of an inverter my increase the shock and vibrations experienced by the inverter assembly. However, it is also understood that such a stacked orientation may be advantageous in view of various design considerations. For example, allowing a stacked orientation may be beneficial from an aerodynamic perspective where the stacking allows the inverter, or the inverter in combination with other engine components such as the gearbox and/or motor, to maintain a low drag profile. Additionally, a stacked orientation may be advantageous from a manufacturability point of view such that less components are involved in securing the inverter assembly, as well as being advantageous from a mass reduction perspective where less components, and potentially less mass, is being used to secure the components.

As disclosed herein, an inverter assembly may include a power PCBA assembly. In some embodiments, power PCBA assembly may include a power board. FIG. **24** is an illustration of an exemplary printed circuit board assembly of a VTOL aircraft, consistent with disclosed embodiments. In some embodiments, power board **2400** may include inverter busbars for high current and low inductance. Power board **2400** may also include a sensor assembly. As an example, possible sensors may include sensors for current shunt, motor temperature, and MOSFET module temperature. Further, some embodiments may include various power modules **2402** electrically coupled to the power board **2400**. As discussed herein, power modules **2402** may generate heat during use and require cooling to ensure proper functionality and efficiency of the overall electric propulsion system.

As discussed above, an electric engine and related control components of a VTOL aircraft may generate heat during operation. For example, such components may include an inverter assembly, electric motor assembly, and a gearbox assembly. An engine may accumulate a buildup of heat generated from mechanical friction between parts, and from resistive heating within the motor-gearbox assembly. The accumulated heat may be carried to the heat exchanger by lubricant circulating through one or more parts of the engine. The heat must be dissipated to prevent degradation or damage to the motor, control components and other elements of the VTOL aircraft. Such heat may be managed by cooling the engine, including by direct or indirect cooling. In some embodiments, cooling may be assisted by a heat exchanger. A heat exchanger may be configured to receive a circulating heat exchange medium from an electric engine. For example, the heat exchange medium may comprise oil, and the oil may be used to both lubricate and cool the components of the electric engine. A heat exchanger may interface one or more fluids with each other, thereby cooling a fluid that is at a higher temperature. A heat exchanger may be advantageously located next to an electric engine, thereby minimizing the volume (and weight) of material required to achieve the cooling and lubricating functions. In some embodiments, a heat exchanger may be fluidically, thermally, and mechanically coupled to an inverter assembly such that the heat exchanger may share common connections with the inverter assembly, reducing the need for components such as cables, wires, tubes, and hoses, which may add weight and require more space in the electric engine. Heat in the inverter assembly, electric motor assembly, or gearbox assembly may be transferred to a cooling fluid such as oil. The oil may absorb such heat, and the oil may then be directed to a sump.

As described herein, an electric propulsion system may include a heat exchanger. FIGS. **25**A-C are illustrations and exemplary front views of a heat exchanger of a VTOL aircraft, consistent with disclosed embodiments. A heat exchanger **2504**A may be mechanically coupled to a thermal plate **2502**A of an inverter assembly, as described herein and, as shown in exemplary view **2500**A. Thermal plate **2502**A may include fin arrays **2506**A. Fin arrays **2506**A may provide a heat sink to draw heat from components of the inverter assembly. As described herein, heat exchanger **2504**A may be positioned to receive air flow from a propeller. A propeller (not shown) may direct air flow **2508**A into heat exchanger **2504**A, and exiting air **2510**A may exit the heat exchanger. Air flow **2508**A, which may be cooler air, may be forced into heat exchanger **2504**A as, e.g., downwash from propeller blades (not shown). Exiting air **2510**A, which may be warmer air, may exit the heat exchanger **2504**A without entering other components of the electric propulsion system. In some embodiments, heat exchanger **2504**A may include cooling fins.

FIGS. **25**B-C illustrates exemplary views of cooling fins **2500**B, **2500**C in a heat exchanger, respectively. The oil or other lubricant or coolant which may absorb heat from the electric motor assembly, gearbox assembly, or inverter assembly may be circulated through the fins of heat exchanger **2504**A. Heat exchanger **2504**A may include tubes **2504**B and fins **2502**B. Tubes **2504**B may carry oil, and fins **2502**B may be thermally coupled to tubes **2504**B. As a result, oil travelling in tubes **2504**B may transfer heat to another fluid heat exchange medium. Fins **2502**B may be configured to maximize the surface area of heat exchanger **2504**A, increasing the surface area contact between the tubes **2504**B and the fluid. Increased surface area may increase the rate of heat transfer. The fluid may comprise air. For example, air flow **2508**A may enter heat exchanger **2504**A, come into thermal contact with fins **2502**C. and receive heat from oil traveling in tubes **2504**C. Air may then exit heat exchanger **2504**A as exiting air **2510**A. Heat exchanger **2504**A may transfer heat via convection.

FIG. **26** is an illustration of a heat exchanger of a VTOL aircraft, consistent with disclosed embodiments. Heat exchanger **2600** may include a length **2602**, height **2604**, and depth **2606**. As described herein, heat exchanger **2600** may include tubes and fins to assist in heat transfer between fluids. Heat exchanger **2600** may include a number of cooling paths. Section **2608** shows an example of different cooling paths. A lubricant or coolant, such as oil, may travel in tubes **2610**. Tubes **2610** may be thermally coupled to fins **2612**, as described herein. Tubes **2610** may comprise hollow tubes for fluids. Fins **2612** may increase the surface area of contact between air and tubes **2610**, thereby increasing the rate of heat transfer from oil in tubes **2610** to the air, as described herein. In some embodiments, heat exchanger **2600** may include multiple layers of fins **2612** stacked between, and thermally coupled to, tubes **2610**. As a result, oil entering heat exchanger **2600** may flow into different tubes **2610**, creating a number of cooling paths wherein heat can be transferred from the oil to the air.

As described herein, embodiments of an electric engine may include circulating a lubricant or coolant throughout the

engine. A heat exchanger may cool lubricants or coolants directed to engine components such as a motor, gearbox, or inverter. In some embodiments, heat from the inverter assembly may be directly conducted to the coolant or lubricant, such as oil.

FIGS. **27**A-B are illustrations of a front view of a divider plate of a VTOL aircraft, consistent with disclosed embodiments. In some embodiments, a divider plate may be comprised of an end bell plate and a thermal plate. A dividing plate may comprise one or more plates sandwiched together and arranged between a motor-gearbox housing and an inverter assembly housing. Further, a divider plate may assist in the distribution of a lubricant or coolant throughout the engine. In some embodiments, a divider plate may include channels, tubes, ports, cavities, or other characteristics for transporting liquids. An end bell plate **2700** may include similar elements and discussion as the end bell plate of FIG. **21**. In some embodiments an end bell plate **2700**A may be coupled to thermal plate **2700**B. In some embodiments, end bell plate **2700**A may abut a gasket plate which may abut thermal plate **2700**B. The inverter assembly may include thermal plate **2700**B. Thermal plate **2700**B may be mechanically, thermally, and fluidically coupled to heat exchanger **2710**B. In some embodiments, the end bell plate **2700**A and thermal plate **2700**B may be positioned above a heat exchanger. The outer circumference of thermal plate **2700**B may be connected to the heat exchanger **2710**B. End bell plate **2700**A and thermal plate **2700**B may include channels to aid in the distribution of a lubricant or coolant. Herein, channels may also refer to grooves, bores, or any other conduit configured to distribute oil or other coolant or lubricant in a planar direction. In some embodiments, a lubricant or coolant may be a liquid such as oil, as described herein. The thermal plate may be thermally and fluidically coupled to a heat exchanger by a liquid such as oil. In some embodiments, the distribution of a lubricant or coolant may be driven by a pump. Thermal plate **2700**B may include grooves, bores, liquid flow paths, or any other conduit to assist a pump gear in transporting oil or other liquid from a sump. In some embodiments, oil may be transported from a sump through a passage rotor **2704**A, **2704**B and a pump rotor **2706**A to inlet channel **2708**A on end bell plate **2700**A. Oil in inlet channel **2708**A may be hot or warm oil traveling in flow path **2716**A. Oil in inlet channel **2708**A may travel to heat exchanger inlet **2706**B in thermal plate **2700**B and enter tubes or other liquid flow paths of heat exchanger **2710**B. As described herein, oil circulating through liquid flow paths may be cooled in heat exchanger **2710**B, and cooled oil may travel to a heat exchanger outlet **2708**B in thermal plate **2700**B. In some embodiments, oil transported between a thermal plate **2700**B and end bell plate **2700**A may travel through a gasket plate. Cooled oil in heat exchanger outlet **2708**B may then travel to outlet channel **2710**A along flow path **2718**A to an annulus **2712**A and channel **2714**A of the end bell plate **2700**A and annulus **2712**B on thermal plate **2700**B. In some embodiments, oil in annulus **2712**B may flow into fin arrays **2714**B in thermal plate **2700**B to provide cooling and heat transfer. Oil from fin arrays **2714**B may then return to a sump via ports. Some embodiments may include the annulus **2712**A being substantially aligned along a main shaft or axis shared with the gearbox assembly or electric motor assembly. In some embodiments, oil or liquid may travel from the annulus **2712**A, through port holes to a gearbox assembly or electric motor assembly, as described herein. In some embodiments, a channel **2714**A may be fluidically connected to additional liquid flow paths within the motor-gearbox housing that may serve to circulate oil or liquid to additional portions of the electric engine, such as front bearings or components located near the propeller assembly. In some embodiments, the end bell plate may include a seal in the electric engine. The end bell assembly may include a face-seal between the heat exchanger and the inverter assembly to prevent oil leaks.

In some embodiments, a lubricant or coolant may be used to cool an inverter assembly using a thermal plate **2702**B. Some embodiments may include hot oil or other liquid entering inlet channel **2708**A, that may be aligned with heat exchanger inlet **2706**B, to enter the heat exchanger **2710**B. Cooled oil or other liquid exiting the outlet channel **2710**A aligned with heat exchanger outlet **2708**B and a portion, or all, of the cooled oil or liquid may follow a liquid flow path to an annulus **2712**B of the thermal plate. Oil or other liquid in annulus **2712**B may be distributed to heat sinks located on the thermal plate **2702**B such as fin arrays **2714**B and may provide cooling to power modules, such as those referenced in FIG. **24**, by aligning fin arrays **2714**B with the power modules located within the inverter assembly. It should be understood that an inverter assembly may possess components that may not perform well or efficiency when exposed to oil or other liquids. As such, a thermal plate may include heat sinks to remove heat from the inverter assembly and then may circulate oil or liquid within the thermal plate, and not within the inverter assembly housing, to transfer heat from those heat sinks into the oil or liquid to be cooled by the heat exchanger. A thermal plate **2702**B may include port holes **2716**B such that oil or liquid may pass through the port holes and enter an end bell assembly. In some embodiments, port holes **2716**B may allow oil to return to a sump. In some embodiments, port holes **2716**B may align with port holes **2720**A present on the plate **2702**A of the end bell plate **2700**A. In some embodiments, oil from the port holes **2718**B may enter the end bell assembly to circulate to a sump locating in the motor-gearbox housing. In some embodiments, oil may return to the sump along the direction of gravity, and such oil may be warm or hot. Cooling with oil may provide various advantages, including improving the overall performance of the inverter assembly. For example, using fluids to cool power modules, such as those referenced in FIG. **24**, may improve the performance of the inverter assembly. Furthermore, liquid convection may improve durability of the inverter assembly compared to other cooling methods involving additional components, such as air convection methods requiring the addition of air-cooling fins.

Disclosed embodiments of the electric propulsion system may include one or more components for distributing a lubricant or coolant, as described herein. In some embodiments, the lubricant or coolant, such as oil, may be circulated from a sump **1212**A, to a heat exchanger **1226**A, and then to an inverter assembly, gearbox assembly, and motor assembly (as illustrated in FIG. **12**A). As illustrated in FIG. **21**A, an end bell assembly may assist in the distribution and circulation of the oil. As described herein, oil traveling from the heat exchanger in channel **2108**A may be distributed to an annulus **2110**A and ports **2116**A located in annulus **2110**A. As described herein, a main shaft, which may be substantially aligned with the annulus **2110**A of the end bell assembly, may extend from the end bell assembly through the gearbox assembly and through the electric motor assembly. In some embodiments, portions of the oil in the end bell assembly may be shared among the annulus **2110**A, ports **2116**A, ports **2122**A, and various other ports and channels. Centrifugal force, centripetal force, or pressure may drive oil from annulus **2110**A, ports **2116**A, or grooves in bearing

2110B along the main shaft, and towards the gearbox assembly and electric motor assembly. For example, pressure in end bell assembly 2100B may drive oil to grooves in bearing 2110B or port holes 2112B. may Then, centrifugal force may drive the oil along the main shaft to windings of the stator in the motor assembly. For example, rotation of the main shaft may exert centrifugal forces that propel oil to travel along the main shaft. In some embodiments, oil may travel from the end bell assembly through holes, pipes, channels, tubes, or ports to the gearbox assembly and motor assembly. For example, oil may flow in an annular area between a sun gear and a shaft. In some embodiments, a port may transfer oil from an end bell assembly to a channel, or similar structure, present within the motor assembly housing for the purpose of delivering oil to additional portions of the gearbox assembly or motor assembly. Some embodiments may include a channel, or similar structure, configured to deliver oil to the propeller assembly, bearings mechanically coupled to a shaft flange, or stator windings within the motor assembly.

As described herein, by using a fluid, such as oil, to provide both lubrication and cooling, the amount of oil used in the electric propulsion system may be minimized. Furthermore, the oil can be used for lubricating various bearings, such as rolling bearings or hydrodynamic bearings, as described herein. Minimizing the amount of oil used in the electric propulsion system may reduce the mass and drag profile of the electric propulsion system. Furthermore, minimizing the amount of oil necessary for operation of the electric propulsion system may enable the total quantity of oil in the electric propulsion system to remain below a threshold amount. For example, the electric propulsion system may reduce the amount of oil necessary for operation by using a heat exchanger, as described herein. Warm or hot oil that has been used for lubrication and cooling may reside in a sump, and by using a heat exchanger to cool such oil, the electric propulsion system may re-use the oil, eliminating the need for additional oil. Further, as described herein, the use of a common liquid for both cooling and lubricating can lead to a reduction in mass of components when compared to other methods of cooling and lubricating using various liquids. Such a configuration using various liquids may require additional mass and size of the electric propulsion system such as additional heat exchangers, additional fluid distribution channels or tubes, and additional surface area to receive cooling air from a propeller assembly.

In some embodiments, ventilation from air-flow may provide cooling to lubricants within the heat exchanger. It is understood that by using oil to not only lubricate the electric engine but also cool the electric engine rather than another coolant, additional oil will be added to the system, but that oil will remove traditional components that may be used to cool such an electric engine. For example, if the electric engine were cooled by another liquid such as glycol, the engine may comprise separate heat exchangers for both the lubricant fluid and the coolant fluid. As such, in embodiments where a single fluid is being used for both lubrication and cooling, such as oil, an increase in oil would be present but there would only be a need for one heat exchanger, so there may be a decrease in mass, due to using less heat exchangers and potentially other components not being required, of the overall system and a more appealing drag profile may be present. Further, using one substance for the lubrication and cooling of the engine may increase efficiency of the system due to the reduction in mass and the benefits of cooling the engine with a substance rather than relying on air cooling which may have issues traveling throughout the engine.

Some embodiments of an inverter may include an inverter possessing a coolant path traveling around the outer edge of the inverter but within the inverter housing rather than utilizing a heat exchanger. For example, a coolant path may travel around any printed circuit board assemblies, power modules, or other inverter components present in the inverter.

As disclosed herein, embodiments of electric engine may include an inverter assembly. In some embodiments, the inverter assembly may include a thermal plate. FIG. **28** is an illustration of a thermal plate of a VTOL aircraft, consistent with disclosed embodiments. Thermal plate **2802** may aid in heat transfer for inverter assemblies, including distributing a coolant to an inverter assembly. In some embodiments, thermal plate **2802** may abut components of an inverter assembly, such as an inverter housing or printed circuit board. Thermal plate **2802** may be thermally coupled to an inverter assembly. In some embodiments, thermal plate **2802** may abut an end bell assembly. In some embodiments, thermal plate **2802** may abut a gasket, which may abut an end bell assembly. The gasket may be a metal carrier gasket. In some embodiments, a thermal plate **2802** may abut a heat exchanger **2810**. For example, thermal plate **2802** may be mounted on heat exchanger **2810** and coolants may travel through various paths in heat exchanger **2810**. As an example, oil may be a coolant that travels through various paths in heat exchanger **2810**. Pump rotor **2804** may drive oil through cooling paths, also referred to herein as liquid flow paths, in heat exchanger **2810**. In some embodiments, oil or other liquid from a sump may be drawn through a pump rotor **2804** to a heat exchanger inlet **2806**. In some embodiments, a heat exchanger **2810** may receive oil or other liquid from the heat exchanger inlet **2806**, cool the oil or other liquid, and the cooled oil or other liquid may exit the heat exchanger at a heat exchanger outlet **2808**. Cooled oil from heat exchanger **2810** may be driven by pump **2804** to different channels in the thermal plate. For example, oil may be transported to distribution channels **2812**. In some embodiments, thermal plate **2802** may include heat sinks to assist in heat transfer for the inverter assembly. As an example, thermal plate **2802** may include fin arrays **2818**. Fin arrays **2818** may include cooling fins that extend from a base and may increase the surface area to improve heat transfer. Fin arrays **2818** may sit within cavities in thermal plate **2802**. Fin arrays **2818** may be a heat sink and may be comprised of a material with high thermal conductivity. In some embodiments, fins may be rectangular or circular in shape, and may be comprised of aluminum. Fin arrays **2818** may draw heat from the thermally and mechanically coupled inverter assembly to cool components including switching devices and MOSFETs. Fin arrays **2818** may be exposed to a flowing fluid. For example, cooled oil in distribution channels **2812** may enter fin arrays **2818**, via channels **2814**, and provide cooling and heat transfer to fin arrays **2818**. From fin arrays **2818**, oil may then flow to collection channel **2816**. In other embodiments, oil may be transferred directly from distribution channels **2812** to collection channels **2816**.

FIG. **29** is an illustration of an electric propulsion system of a VTOL aircraft, consistent with disclosed embodiments. In some embodiments, thermal plate **2900** may be thermally coupled to motor assembly housing **2902**. Thermal plate **2900** may also be fluidically coupled to motor assembly housing **2902** by one or more coolant or lubricant flow paths.

As described herein, thermal plate **2900** may assist in the distribution of a coolant or lubricant such as oil. For example, oil in thermal plate **2900** may enter heat exchanger **2914** via a heat exchanger inlet **2912** and exit heat exchanger **2914** via a heat exchanger outlet **2910**. Thermal plate **2900** may include pump rotor **2908**, distribution channel **2916**, fin arrays **2922**, and collection channel **2920**. Cooled oil from heat exchanger **2914** may enter distribution channel **2916**, flow through fin arrays **2922**, via a direction **2928**, and enter collection channel **2920** through channel **2918**. As described herein, fin arrays **2922** may be a heat sink, and assist in transferring heat to cooled oil **2928** from the inverter assembly. In some embodiments, oil in thermal plate **2900** may be transferred to motor assembly housing **2902**. For example, oil flow path **2930** may be an exemplary flow path from thermal plate **2900** to motor assembly housing **2902**. Oil flow path **2932** may be an exemplary flow path of oil to various components in motor assembly housing **2902**. Oil **2930** may also travel to a second oil flow path **2934**. Oil in the various flow paths may travel to a gearbox assembly, electric motor assembly, or other components within motor assembly housing **2902** to provide cooling or lubrication, as described herein. Oil that has been distributed throughout the motor assembly housing **2902** may accumulate in a sump **2904**. Oil may flow through the sump along a liquid flow path **2924** and then exit the sump **2904** and flow in a return path **2926** back to thermal plate **2900**. Motor assembly **2902** may be mechanically coupled to a shaft flange assembly **2906**, as described herein. In some embodiments, the location of thermal plate **2900** and heat exchanger **2914** may provide advantages to the electric propulsion system. For example, thermal plate **2900** abutting heat exchanger **2914** and being liquidly coupled to heat exchanger **2914** may eliminate the need for external connections. As discussed herein, oil may travel from heat exchanger **2914** to thermal plate **2900** and be distributed to components of the electric propulsion system such as an inverter assembly, gearbox assembly, and motor assembly, which may be packaged together. Such configuration, including a thermal plate integrating several components together, may eliminate the need for external connections and may reduce risks such as leaks and detachment of such external connections.

FIGS. **30**A-B are illustrations of exemplary electric propulsion systems of a VTOL aircraft, consistent with disclosed embodiments. As described herein, an electric propulsion system **3000**A may include a heat exchanger **3008**A mechanically, thermally, and fluidically coupled to a thermal plate **3006**A. Thermal plate **3006**A may be mechanically coupled to motor housing **3002**A comprising a liquid sump **3004**A. Electric propulsion system **3000**A may include shaft flange assembly **3010**A. In some embodiments, the electrical propulsion system **3000**A may include a thermal plate **3006**A and motor housing **3002**A substantially aligned along an axis **3012**A. FIG. **30**B presents an additional view of an electric propulsion system **3000**B. Heat exchanger **3008**B may be mechanically coupled to thermal plate **3006**B. Thermal plate **3006**B may be mechanically coupled to motor housing **3002**B that may comprise a liquid sump **3004**B. In some embodiments, the electrical propulsion system **3000**B may include a thermal plate **3006**B and motor housing **3002**B substantially aligned along an axis **3012**B.

FIGS. **31**A-B are cross-sectional illustrations of electric propulsion systems of a VTOL aircraft, consistent with disclosed embodiments. FIG. **31**A illustrates an exemplary embodiment of a tilter electric propulsion system. As disclosed herein, a tilter may refer to an electric propulsion system for tilt. A tilter **3100**A may include an inverter assembly **3104**A, a gearbox assembly **3106**A, and an electric motor assembly **3102**A. As described herein, heat exchanger **3118**A may be thermally, fluidically, and mechanically coupled to inverter assembly **3104**A. Inverter housing **3116**A may enclose inverter assembly **3104**A. A gearbox assembly **3106**A may abut the inverter assembly **3104**A and the electric motor assembly **3102**A. Motor-gearbox assembly housing **3110**A may enclose an electric motor assembly **3102**A and a gearbox assembly **3106**A. Sump **3112**A may include a fluid inlet **3114**A to transfer oil or other liquid to a heat exchanger **3118**A. In some embodiments, sump **3112**A may be a reservoir to hold oil. Sump **3112**A may abut motor housing **3110**A. In some embodiments, main shaft **3108**A extends from an end bell assembly sealing the motor-gearbox assembly housing **3110**A, through the gearbox assembly **3106**A and electric motor assembly **3102**A to a shaft flange assembly **3120**A. As described herein, gearbox assembly **3106**A and electric motor assembly **3102**A may be substantially aligned along main shaft **3108**A. Further, an inverter assembly **3104**A may be substantially aligned along an axis sharing the axis of the main shaft **3108**A.

As described above, a tilter may possess a variable pitch mechanism that serves to change the pitch of the propeller blades of a VTOL aircraft. In some embodiments, a variable pitch mechanism may be mounted to the rear of the electric engine assembly, such as the rear of an inverter assembly. Further, a variable pitch mechanism may interact with a main shaft, as described herein, to alter the pitch of the propeller blades. In such embodiments, the inverter assembly **3104**A, inverter assembly housing **3116**A, and divider plate, as discussed herein, may possess a packaging having a passage through their configurations and housings to allow the variable pitch mechanism to interface with the main shaft or propeller blades. As discussed throughout, a lifter electric propulsion system may not alter its orientation of thrust or pitch of blades. Therefore, in some embodiments, a divider plate may not possess a passage such as the one present in the tilter electric propulsion system. Further, the inverter assembly and inverter assembly housing of a lifter electric propulsion system may not possess such a passage, but it is recognized that from a safety testing point of view and a manufacturability standpoint, it may be beneficial to have the inverter assembly and inverter assembly housing of a lifter electric propulsion system possess a similar packaging, including the passage, to that of the tilter electric propulsion system.

FIG. **31**B illustrates an exemplary embodiment of a lifter electric propulsion system. As disclosed herein, a lifter may refer to an electric propulsion system for lift. A lifter **3100**B may include inverter assembly **3104**B, gearbox assembly **3106**B, and electric motor assembly **310**BA. As described herein, heat exchanger **3118**B may be thermally, fluidically, and mechanically coupled to inverter assembly **3104**B. Inverter housing **3116**B may enclose inverter assembly **3104**A. A gearbox assembly **3106**B may abut inverter assembly **3104**B and electric motor assembly **3102**B. Motor-gearbox housing **3110**B may enclose an electric motor assembly **3102**B. In some embodiments, main shaft **3108**B extends from an end bell assembly sealing the motor-gearbox housing **3110**B, through gearbox assembly **3106**B, to electric motor assembly **3102**B. As described herein, gearbox assembly **3106**B and electric motor assembly **3102**B may be substantially aligned along main shaft **3108**B. Further, an inverter assembly **3104**B may be substantially aligned along an axis sharing the axis of the main shaft **3108**B.

As discussed herein, it is noted that having similar components between the tilter and lifter electric propulsion systems may be beneficial with respect to manufacturability of the overall aircraft. Further, using similar components between the tilter and lifter electric propulsion systems may be beneficial in terms of diagnosing issues and assuring safety requirements and protocols are met. However, in some embodiments, a lifter and tilter may possess components that are not present within the other. For example, a lifter electric propulsion system **3100**B may include a lock nut **3112**B posited between the main shaft **3108**B and the shaft flange assembly **3120**B that is larger than the lock nut present within the tilter electric propulsion system **3100**A. A lock nut **3122**B may serve to ensure the mechanical coupling of the main shaft **3108**B and shaft flange assembly **3120**B may not be damaged or corrupted due to the various vibrations loads experienced throughout the flight. For example, as discussed herein, some phases of flight do not require the lifter electric propulsion system to be active and in such cases may require the blades to be stored in a certain fashion. However, if the lifter blades were to not be properly stored, they may experience a drag force against the blades and the mechanical coupling of the main shaft **3108**B and shaft flange assembly **3122**B may experience a tension force. Further, in some embodiments, the lock nut **3112**B of the lifter electric propulsion system **3100**B may counteract operational loads. In some embodiments, a lifter electric propulsion system may also include a larger propeller flange **3126**A, compared to the shaft flange of the tilter, for similar reasons as to the presence of the lock nut **3122**B. Further, the lifter electric propulsion system may also include a bearing **3124**A to assist in the rotation of the propeller flange **3126**A. As described herein, an electric propulsion system may achieve different angles of orientation during operation. As such, fluids in the electric propulsion system, including coolants or lubricants, may move due to gravitational forces. For example, a lubricant or coolant such as oil may be shifted within the electric propulsion system during operation. Oil may reside in a sump, and the oil may shift within the sump and the electric propulsion system. Not matter the orientation, some embodiments may require some quantity of oil or other liquid acting as coolant or lubricant throughout all phases of flight. As such, a cooling system may be designed to allow for the circulation of oil no matter the orientation of the aircraft.

FIGS. **32**A-D are cross-sectional illustrations of electric propulsion systems of a VTOL aircraft, consistent with disclosed embodiments. FIGS. **32**A-D possess like numerals and refer to similar elements of the electric propulsion systems **3200**A, **3200**B, **3200**C, and **3200**D. As such, similar design considerations and configurations may be considered throughout the embodiments.

FIG. **32**A illustrates an exemplary embodiment of an electric propulsion system in an upright orientation. As an example, an upright orientation could be achieved during flight operations including, but not limited to, takeoff, landing, or hover. Electric propulsion system **3200**A may include motor-gearbox assembly housing **3202**A, inverter assembly housing **3204**A, main shaft **3206**A, shaft flange assembly **3120**, heat exchanger **3208**A, and sump **3210**A. Lubricants or coolants such as oil **3212**A may be located in sump **3210**A. In the exemplary orientation **3200**A, oil may also be present in the volume **3218**A at an oil level **3216**A in the volume **3218**A and the sump **3210**A. Oil **3212**A may enter pump inlet **3214**A and travel to heat exchanger **3208**A. Then, oil **3212**A may be cooled in heat exchanger **3208**A, and distributed throughout the electric propulsion system, as described herein. In some embodiments, oil may be distributed along main shaft **3206**A by centrifugal forces.

FIG. **32**B illustrates an exemplary embodiment of an electric propulsion system **3200**B in a first angled orientation, for example a hover orientation at an angle **3222**B. As an example, electric propulsion system **3200**B may be oriented along central axis **3224**B at an angle **3222**B from vertical axis **3226**B. As shown in FIG. **32**B, although the electric propulsion system **3200**B is in an angled orientation, pump inlet **3214**B remains in contact with the oil **3212**B and under the oil level **3216**B to allow oil to continue to circulate through the liquid flow paths as described herein.

FIG. **32**C illustrates an exemplary embodiment of an electric propulsion system **3200**C in a horizontal orientation. As an example, electric propulsion system **3200**C may be in a horizontal orientation during forward flight or cruise configuration. As shown in FIG. **32**C, during a horizontal orientation, the pump inlet **3214**C remains in contact with the oil **3212**C and under the oil level **3216**C to allow oil to continue to circulate through the liquid flow paths as described herein. Further, the volume **3218**C may not contain oil during a horizontal configuration due to the force of gravity.

FIG. **32**D illustrates an exemplary embodiment of an electric propulsion system in a second angled orientation, for example a dive at angle **3222**D. As shown in FIG. **32**D, during a dive orientation, the pump inlet **3214**D remains in contact with the oil **3212**D and under the oil level **3216**D to allow oil to continue to circulate through the liquid flow paths as described herein. Further, the volume **3218**D may not contain oil during a horizontal configuration due to the force of gravity. In some embodiments, oil, or other flammable liquid, may be used as a lubricant throughout an electric engine and may also be used as coolant fluid to assist in managing the heat generated by the engine during operation. As has been disclosed herein, an electric engine may have different primary functionalities, and as such may not include the same amount of lubricant and coolant. For example, a lifting and landing engine may only require less than one quart of oil while an engine that operates in all stages of flight may require more than one quart of oil. It should be understood that the example embodiments as mentioned herein are representative and do not dictate the bounds of the amount of lubricant and coolant that may be used in an electric engine.

It is understood that by using oil to not only lubricate the electric engine but also cool the electric engine rather than another coolant, additional oil will be added to the system, but that oil will remove traditional components that may be used to cool such an electric engine. For example, if the electric engine were cooled by another liquid such as glycol, the engine may comprise separate heat exchangers for both the lubricant fluid and the coolant fluid. In some embodiments, an electric engine may be cooled using various liquids. Some embodiments may include the electric propulsion system comprising multiple heat exchangers that cool their respective liquid flowing in their respective liquid flow paths. In some embodiments, multiple cooling and/or lubricating liquids, such as glycol and oil, may have a respective liquid flow path that circular through a common heat exchanger, also known as a dual heat exchanger. In such a configuration, the number of heat exchangers may be less than the number of types of liquid flow paths, based on liquid type, and the overall propulsion system may conserve mass by not possessing multiple, or more, heat exchangers.

However, with respect to embodiments utilizing a single fluid for both lubrication and cooling, such as oil, an increase

in oil would be present but there would only be a need for one heat exchanger, so there may be a decrease in mass, due to using less heat exchangers and potentially other components not being required, of the overall system and a more appealing drag profile may be present. Further, using one substance for the lubrication and cooling of the engine may increase efficiency of the system due to the reduction in mass and the benefits of cooling the engine with a substance rather than relying on air cooling which may have issues traveling throughout the engine.

With respect to using oil, or other flammable liquids, within the electric propulsion systems as described herein, federal laws and regulations may be in place requiring safety components such as fire protective barriers adjacent to engines that use more than a threshold amount of oil or other flammable materials. Such federal laws and regulations may be enforced by government entities such as the Federal Aviation Administration.

It should be noted that some of the electric propulsion system embodiments as described herein may not include a fire protective barrier. A fire protective barrier as used herein may include an engine component or aircraft component designed, constructed, or installed with the primary purpose of preventing a hazardous quantity of air, fluid, or flame from passing around or through the fire protective barrier, and/or to protect against corrosion. In some embodiments, a fire protective barrier may be required for each electric propulsion system present on an aircraft. As such, if an aircraft, as described herein, possesses, for example, twelve electric propulsion systems, twelve fire protective barriers may be required to be installed on the aircraft. In some embodiments, a fire protective barrier may be required to be present on each wing, to surround the fuselage, or any other configuration based on federal law, regulations, or other safety requirements. As such, the presence of a fire protective barrier may add additional mass to the aircraft and thus decrease the efficiency of the electric propulsion system and further limit reduce the amount of payload, including passengers, present on the aircraft. This is especially relevant for VTOL aircraft design where a single aircraft may possess, for example, twelve electric propulsion systems so any increase in mass due to a single fire protective barrier could be experienced twelve-fold.

While some embodiments as described herein do not include a fire protective barrier, additional versions all embodiments described and considered herein may include a fire protective barrier. In addition, each embodiment as described herein may possess various types and locations of fire protective barriers.

FIGS. **33**A-C are schematic diagrams illustrating exemplary electric propulsion systems of a VTOL aircraft comprising fire protective barriers, consistent with disclosed embodiments. FIG. **33**A illustrates an exemplary electric propulsion system **3300**A comprising a fire protective barrier **3308**A, consistent with the present disclosure. Fire protective barrier **3308**A may be posited between the electric engine assembly **3302**A, that is mechanically coupled to a propeller assembly **3306**A, and boom **3304**A with the primary purpose of stopping any fire or combustion that may occur in the electric engine assembly **3302**A from spreading to other areas of the aircraft.

FIG. **33**B illustrates an exemplary VTOL aircraft **3300**B, consistent with the present disclosure. A VTOL aircraft **3300**B may comprise a fire protective barrier **3306**B mounted or connected to wing **3304**B connected to a fuselage **3302**B. As shown in FIG. **33**B, a fire protective barrier **3306**B may be posited between an electric propulsion system, comprising an electric engine **3308**B and a propeller assembly **3310**B, and the wing **3304**B of the VTOL aircraft **3300**B with the primary purpose of stopping any fire or combustion. In some embodiments, the fire protective barrier **3306**B may posited between the wing **3304**B and a boom housing the electric propulsion system.

FIG. **33**C illustrates an exemplary electric propulsion system **3300**C, consistent with the present disclosure. The electric propulsion system **3300**C may comprise an electric motor assembly **3302**C, including a gearbox assembly in some embodiments, and an inverter assembly **3304**C that are fluidically coupled to a heat exchanger **3306**C. In some embodiments, the electric motor assembly **3302**C may abut the inverter assembly **3304**C. Some embodiments may also include an electric engine assembly housing **3308**C. An electric engine assembly housing **3308**C may comprise a fire protective barrier **3310**C. In some embodiments, the fire protective barrier **3310**C may also serve to house the rear of the electric engine assembly, and as shown in this figure, the inverter assembly.

In some embodiments, fire risk management in the aircraft design may not be limited to inclusion of a fire protective barrier. Additional design considerations may address fire risks, such as additional components to ensure an aircraft may maintain flight if a fire were to occur. For example, an aircraft boom, as described herein, may feature additional components present within the boom to ensure that if a fire was present, components were lost to a fire, components became detached due to fire, or any other loss in functionality or components were to occur, the aircraft may still maintain balanced flight.

C. Exemplary Electric Propulsion System Configurations

As discussed above and throughout this disclose, an exemplary electric propulsion system may include components comprising an electric motor assembly, a gearbox assembly, and an inverter assembly across various configurations, such as representative configurations as described herein. Exemplary embodiments as discussed herein may include components of the electric propulsion system being aligned along a common axis or substantially aligned along a common axis. In some embodiments the components may be aligned along a shaft or main shaft that provides mechanical shaft power to turn the propellers of a propeller assembly. Some embodiments may include components of the electric propulsion system abutting each other in a sequence along an axis or substantially aligned along an axis. In some embodiments, the location or positioning of one or more electric propulsion system components may provide a reduction in mass of the system and yield a more efficiency drag profile. For example, one or more component may be substantially aligned along a common axis or abut each other, and may not require additional components such as connection wires or additional housing volume to allow for wires. As such, the respective mass and volume typically needed to allow such connection wires may not be needed in the disclosed electric propulsion systems.

In some embodiments, an electric propulsion system may also comprise a cooling system configured to target multiple heat-generating portions of electric propulsion system. Some embodiments may include portions of the electric propulsion system being air-cooled by air flow generated from the propeller assembly or air flow that is encountered during various phases of flight. Some embodiments may include portions of the electric propulsion system being cooled using one or more liquid flow paths throughout the electric propulsion system. Such embodiments may also include the liquid flow paths circulating through a heat

exchanger that is exposed to air flow such that any heat contained in the liquid flow paths may be transferred to the air flowing through the heat exchanger. It should be understood that the components of the electric propulsion system, as described herein, may all be cooled using a common cooling system, may each have their own independent cooling system, or may combine various types and configurations of cooling systems. In some embodiments, the respective cooling system of an electric propulsion system may have an impact on efficiency of the components of the electric propulsion system. For example, in some embodiments, liquid cooling may allow for an inverter assembly to operate more efficiently than an inverter assembly utilizing an air-cooled system.

FIGS. **34**A-D are schematic diagrams illustrating exemplary electric propulsion systems of a VTOL aircraft, consistent with disclosed embodiments. As such, similar design considerations and configurations may be considered throughout the embodiments.

FIG. **34**A schematically depicts an exemplary electric propulsion system **3400**A consistent with the present disclosure. Electric propulsion system **3400**A may include components such as an inverter assembly **3404**A, at least one power module **3410**A, and an electric motor assembly **3402**A oriented along an axis extending along a shaft **3406**A. Embodiments may include an electric motor assembly **3402**A that provides torque to a propeller assembly **3408**A via the shaft **3406**A. In some embodiments, the shaft **3406**A may be mechanically coupled to a gearbox assembly (not shown in this exemplary embodiment) to provide a gear reduction and increased torque to the propeller assembly **3408**A. Housing of components of the electric propulsion system **3400**A may share common shapes such as circular profiles centered about the shaft **3406**A, rectangular profiles oriented along the shaft **3406**A, or a mixture of profiles. Electric propulsion system **3400**A may further comprise the electric motor assembly **3402**A positioned between, and abutting, the inverter assembly **3404**A and the propeller assembly **3408**A. In such an embodiment, the shaft **3406**A may pass through the electric motor assembly **3402**A. Some embodiments may include the shaft **3406**A also passing through the inverter assembly **3404**A. In some embodiments, a power module **3410**A may be axially oriented in the inverter assembly **3404**A such that any heat generated by the power modules may escapes via a path **3412**A going to the environment external to the inverter assembly **3404**A. Some embodiments may also include orienting a power module **3410**A in the inverter assembly **3404**A such that a flow of air produced by the propeller assembly **3408**A, or air encountered during flight, may be used to cool the power modules.

FIG. **34**B schematically depicts an exemplary electric propulsion system **3400**B consistent with the present disclosure. Electric propulsion system **3400**B may comprise components such as an inverter assembly **3404**B, at least one power module **3410**B, and an electric motor assembly **3402**B aligned along an axis extending along a main shaft **3406**B. Electric propulsion system **3400**B may further comprise and an inverter assembly **3404**B positioned between an electric motor assembly **3402**B and a propeller assembly **3408**B. In some embodiments, a power module **3410**B may be positioned on a portion of the inverter assembly **3404**B such that it is located below the propeller assembly **3408**B and may generate heat that escapes via a path **3412**B going to the environment external to the inverter assembly **3404**B. Some embodiments may include power modules oriented elsewhere in the inverter assembly such that any flow of air produced by a propeller assembly **3408**B may be used to cool the power modules.

FIG. **34**C schematically depicts an exemplary electric propulsion system **3400**C consistent with the present disclosure. Electric propulsion system **3400**C may comprise components such as an inverter assembly **3404**C, at least one power module **3410**C, and an electric motor assembly **3402**C aligned along an axis extending along a shaft **3406**C. Electric propulsion system **3400**C may further comprise the inverter assembly **3404**C positioned between the electric motor assembly **3402**C and the propeller assembly **3408**C. In some embodiments, a power module **3410**C may be positioned on a portion of the inverter assembly **3404**C such that it is located on an inverter assembly **3404**C surface that abuts the electric motor assembly **3402**C. In some embodiments, the power module **3410**C may be positioned within the electric propulsion system **3400**C as shown with path **3412**C, as opposed to being positioned in the inverter assembly **3404**C where heat generated by the power module **3410**C cannot be cooled using air-cooling from the propeller assembly **3408**C or any airstreams encountered during flight. In such embodiments, liquid cooling may be used to cool to the power module **3410**C as well as other components located within the inverter assembly **3404**C. Further embodiments may include a liquid cooling system that also thermally manages components of the electric motor assembly **3402** and/or components of a gearbox assembly.

FIG. **34**D schematically depicts an exemplary electric propulsion system **3400**D consistent with the present disclosure. Electric propulsion system **3400**D may comprise components such as an inverter assembly **3404**D, at least one power module **3410**D, and an electric motor assembly **3402**D oriented along an axis extending along a shaft **3406**D. Electric propulsion system **4100**D may further comprise an electric motor assembly **3402**D positioned between an inverter assembly **3404**D and a propeller assembly **3408**D. In some embodiments, a power module **3410**D may be positioned on a portion of the inverter assembly **3404**D such that it is located on an inverter assembly **3404**D surface that abuts the electric motor assembly **3402**D. In some embodiments, the power module **3410**D may be positioned within the electric propulsion system **3400**D as shown with path **3412**D, as opposed to in the inverter assembly **3404**D where heat generated by the power module **3410**D cannot be cooled using air-cooling from the propeller assembly **3408**D or any airstreams encountered during flight. In such embodiments, liquid cooling may be used to cool to the power module **3410**D as well as other components located within the inverter assembly **3404**D. Further embodiments may include a liquid cooling system that also thermally manages components of the electric motor assembly **3402** and/or components of a gearbox assembly.

In some embodiments, an electric propulsion system may include a cooling system utilizing liquid cooling. In some embodiments, a cooling system liquid may include glycol, oil, or any other liquid that enables the transfer of heat from components of the electric propulsion system to the liquid. Further, some embodiments may include cooling an electric propulsion system using a liquid that is also used for lubricating components of the electric propulsion system. In some embodiments, the electric propulsion system may include a cavity, reservoir, or sump for collecting and circulating coolant liquid throughout the electric propulsion system.

FIG. **35** is a schematic diagram illustrating an exemplary electric propulsion system of a VTOL aircraft, consistent

with disclosed embodiments. Electric propulsion system **3500** may comprise components such as an electric motor assembly **3502**, inverter assembly **3504**, and sump **3514** aligned along a shaft **3506**. As shown in FIG. **35**, the electric motor assembly **3502** may be positioned between a sump **3514** and an inverter assembly **3504**. The electric motor assembly **3502** may provide torque to a propeller assembly **3508** via the main shaft **3506** that may travel through the inverter assembly **3504**. Further, the electric motor assembly **3502** may provide torque to a propeller assembly **3508** via a gear reduction using a gearbox assembly (not shown in this exemplary embodiment). The inverter assembly may include power connection channels **3518** connected to the inverter assembly **3504**. The inverter assembly **3504** may include power modules **3510** positioned on an opposite portion of the inverter assembly **3504** as the portion that abuts the electric motor assembly **3502**. Further, some embodiments may include the power modules **3510** being positioned within the inverter assembly **3504** such that any heat generated by the power modules **3510** may escape via a path **3512** going to the environment external to the inverter assembly. Some embodiments may include various cooling methods for the components of the electric propulsion system **3500**. For example, in some embodiments the power modules **3510** may be positioned below the propeller assembly **3508** so that the air from the propeller assembly **3508** cools the power modules **3510**. Further, the sump **3514** may house liquid to cool or lubricate the electric motor assembly **3502**, the gearbox assembly, and/or the inverter assembly **3504**. Some embodiments may include the components of the electric propulsion system **3500** possessing various housings profiles, such as circular housings centered about the shaft **3506**, a mixture of housing profiles, and housing profiles that allow for an aerodynamic drag profile. Some embodiments may include component housings possessing cooling fins attached to the outer surface of the housing.

As shown in FIG. **35**, a sump **3514** may possess cooling fins **3516** on the housing of the sump to assist in extracting heat from the liquid used for lubricating or cooling the electric motor assembly **3502**, the gearbox assembly, and/or the inverter assembly **3504**. While some embodiments discussed herein may include electric propulsion system components aligned along a common axis, some embodiments include the components substantially aligned along a common axis.

In some embodiments, an electric propulsion system may include components that are not aligned, or substantially aligned, along an axis. For example, an electric propulsion system may include an electric motor assembly aligned along a shaft that provides mechanical shaft power to the propeller assembly and an inverter assembly supplying alternating current to the electric motor assembly that is located elsewhere within the aircraft. Some embodiments may include an inverter assembly that does not abut the electric motor assembly but is instead housed elsewhere within the boom, wing, or fuselage. In such embodiments, wiring may be run from the inverter assembly to the electric motor assembly to transmit alternating current from the inverter. Separating the locations of components of the electric propulsion system may lead to an increase in mass of the aircraft due to the required wiring and other connection components.

FIGS. **36**A-B are schematic diagrams illustrating exemplary electric propulsion systems of a VTOL aircraft, consistent with disclosed embodiments. As such, similar design considerations and configurations may be considered throughout the embodiments.

FIG. **36**A schematically depicts an exemplary electric propulsion system **3600**A consistent with the present disclosure. Electric propulsion system **3600**A may comprise components such as an electric motor assembly **3602**A centrally aligned along a shaft **3606**A that provides torque to a propeller assembly **3608**A. Embodiments of the electric propulsion system **3600**A may also include a rectangular inverter assembly **3604**A that is cantilevered behind the electric motor assembly **3602**A. Further, some embodiments may include an inverter assembly **3604**A possessing cooling fins **3610**A oriented such that the cooling fins **3610**A may utilize a flow of air from the propeller assembly **3608**A in cooling the power modules, MOSFETs, or other components present in the inverter assembly **3604**A. In some embodiments, the electric motor assembly **3602**A may be housed in a housing with various profiles including circular, rectangular, or any other type of profile depending on the design and needs of the system. The electric motor assembly **3602**A may reside in a motor housing that also possesses cooling fins to assist in cooling elements of the electric motor assembly **3602**A such as the stator, stator windings, or any other element of the electric motor assembly **3602**A. Although not shown in this figure, a gearbox assembly may be present between the electric motor assembly **3602**B and propeller assembly **3608**B, between the electric motor assembly **3602**B and inverter assembly **3604**B, within a housing that contains the electric motor assembly **3602**B, or in any other configuration to allow a gear reduction to be present. Further, although not shown in the drawing, a gearbox assembly may be present within the motor housing and may also utilize the cooling fins to assist in thermal management.

FIG. **36**B schematically depicts an exemplary electric propulsion system **3600**B as disclosed in FIG. **36**A and offers a frontward view from the propeller assembly **3608**A. Electric propulsion system **3600**B may comprise a circular electric motor assembly **3602**B aligned along a shaft **3606**B. Embodiments of the electric propulsion system **3600**B may also include a rectangular inverter assembly **3604**B that may be located behind the electric motor assembly **3602**B. The inverter assembly **3604**B may abut the electric motor assembly **3602**B or may be positioned within the boom, wing, or fuselage. The inverter assembly **3604**B may possess cooling fins **3608**B that extend past the outer diameter of the electric motor assembly **3602**B such that the cooling fins **3608**B are exposed to air flow from the propeller assembly **3608**A or air flow encountered during flight. Further, the cooling fins **3608**B can be used to extract and transfer heat, generated by the power modules, MOSFETs, or other components present in the inverter assembly **3604**A. The cooling fins **3608**B may transfer heat to an environment external to the electric propulsion system. Similarly, the electric motor assembly **3602**B may also possess its own cooling fins (not pictured), positioned on the electric motor assembly's housing, to assist in thermal management of the electric motor assembly **3602**B and any gearbox assembly.

In some embodiments, an electric propulsion system may include thermal management, also referred to as cooling systems herein, that include liquid cooling. As disclosed herein, some exemplary cooling systems may include distributing a liquid coolant to components located throughout the electric motor assembly, the gearbox assembly, and the inverter assembly. However, it should be understood that cooling systems as disclosed herein may also include liquid coolant that is circulated about the perimeter of the electric motor assembly, the gearbox assembly, and/or the inverter assembly. For example, a cooling system may comprise a

cavity, jacket, or distribution channels of a cooling system that circulates liquid coolant about the perimeter of components located within the electric propulsion system.

FIG. **37** is a schematic diagram illustrating an exemplary electric propulsion system of a VTOL aircraft, consistent with disclosed embodiments. Electric propulsion system **3700** may comprise a motor assembly housing **3702**, housing an electric motor assembly, abutting an inverter assembly housing **3708** with a shaft **3706** traveling through motor assembly housing **3702**. In some embodiments, motor assembly housing **3702** and inverter assembly housing **3708** may have various shapes or profiles including, for example, circular housings centered along an axis coinciding with the shaft **3706**, rectangular housings, or any other appropriate geometric orientation. Some embodiments may include a motor assembly housing **3702** that, in addition to housing the electric motor assembly, houses a gearbox assembly. Embodiments may include a gearbox assembly that is positioned between an electric motor assembly and a propeller assembly external to the motor assembly housing **3702**, an electric motor assembly that is positioned between the gearbox assembly and an propeller assembly external to the motor assembly housing **3702**, a gearbox assembly located within the motor assembly housing **3702** but not aligned along the axis of the electric motor assembly, or any other configuration of a gearbox assembly sharing a housing with an electric motor assembly. Some embodiments may include an inverter assembly housing **3708** possessing an inverter assembly **3704** as described herein. Further, an inverter assembly housing **3708** may also possess cooling fins **3710** located on an outer surface of the inverter assembly housing **3708** that utilize air flow encountered during flight to assist in cooling the components of the inverter assembly **3704**. Some embodiments may also include an inverter assembly **3704** utilizing liquid cooling, rather than air cooling, for thermal management. Such embodiments may include a cavity **3714**, jacket, or distribution channels surrounding the inverter assembly **3704** such that liquid may be circulated through the cavity **3714**, jacket, or distribution channels to extract heat generated from the components of the inverter assembly **3704**. Additionally, liquid may be used to cool components within the motor assembly housing **3702**. Path **3712** depicts an exemplary liquid flow path for cooling components located within the motor assembly housing **3702** where the liquid may move from a first end of the motor assembly housing to a second end of the motor assembly housing through distribution channels along the main shaft **3706**. The liquid may be distributed radially from the shaft **3706** and may be collected, via a collection chamber, sump, or similar component, to be recirculated throughout the motor assembly housing **3702**. In some embodiments, the electric motor assembly housing **3702** may be fluidically connected to the inverter assembly housing **3708** such that liquid coolant may be circulated throughout both assemblies via the liquid flow path **3712** and cavity **3714**. In some embodiments, motor assembly housing **3702** and inverter assembly housing **3708** may utilize air cooling, liquid cooling, or a mixture of the two to thermally management components located within each housing.

As discussed herein, an electric propulsion system may include various configurations of components such as aligned along an axis, abutting one another, substantially aligned along an axis, or components connected using wires or other methods of connection. As such, some embodiments may include components sharing a housing. For example, as discussed above, a gearbox assembly may be housed within a motor assembly housing. Further, some embodiments may include housing a gearbox assembly, inverter assembly, or other assemblies or components of those assemblies within the propeller assembly. Such configurations may be driven by design constraints such as weight, drag profile, lift, torque, payload, flight time, or any other design constraints relevant to VTOL aircrafts.

FIGS. **38**A-B are schematic diagrams illustrating an exemplary electric propulsion system of a VTOL aircraft and an exemplary inverter assembly of an electric propulsion system, consistent with disclosed embodiments. Electric propulsion system **3800**A may comprise a motor assembly housing **3802**A aligned along a main shaft **3806**A. Some embodiments may include a motor assembly housing **3802**A that includes an electric motor assembly centrally aligned along the main shaft **3806**A. Some embodiments may include a motor assembly housing **3802**A that houses an electric motor assembly and gearbox assembly. Some embodiments of electric propulsion system **3800**A may also include an inverter assembly **3804**A mounted to the circular face of the motor assembly housing **3802**A with a low voltage input **3808**A located on the face of the motor assembly housing **3802**A. In some embodiments, the inverter assembly **3804**A, in addition to being mounted to the motor assembly housing **3802**A, may be located within a propeller assembly. For example, an inverter assembly as described herein may be positioned within a spinner of a propeller assembly. Such a placement of the inverter assembly **3704**A may be advantageous when other components of the electric propulsion system **3800**A do not justify creating a more compact drag profile. For example, a propeller assembly may have a certain size to meet additional design criteria such as required torque or lift, and in such embodiments the size of the propeller assembly may possess vacant room to allow for the inverter assembly **3804**A to be placed within the hub of the propeller assembly.

FIG. **38**B schematically depicts an exemplary inverter assembly **3800**B consistent with the discussion of inverter assembly **3804**A as well as throughout this disclosure. An inverter assembly **3800**B may comprise at least one power module **3802**B, at least one gate drive **3804**B, at least one control board **3806**B, at least one DC capacitor or low inductance connector **3808**B, and at least one DC current input port **3810**B. Further, an inverter assembly **3800**B may possess cooling fins **3812**B located on the outer surface of the inverter assembly housing to assist in cooling various components of the inverter assembly **3800**B.

In some embodiments, an electric propulsion system may include components present within various component housings. As discussed herein, various components of the electric propulsion system may be present within housings and may be organized in various ways within those housings. Some embodiments of an electric propulsion system may include various configurations of components to achieve varying design goals. Differing embodiments may possess differing primary design components that must be achieved at the expense of other design criteria. For example, some embodiments may contain redundant systems that may add extra mass to the aircraft yet increase passenger safety by avoiding and/or removing single points of failure. Further, some embodiments of an electric propulsion system may include various types of thermal management systems, also referred to herein as cooling systems. Some electric propulsion systems may include a combination of cooling systems, such as air-cooling and liquid cooling systems. For example, electric propulsion system components may possess air-cooling designs such as components being mechanically coupled to cooling fins and

liquid cooling designs where components are fluidically coupled to liquid flow paths and a heat exchanger that extracts heat from the liquid and transfers it into external air.

FIGS. **39**A-D are schematic diagrams illustrating exemplary electric propulsion systems of a VTOL aircraft, consistent with disclosed embodiments. The electric propulsion system **3900**A may comprise an inverter assembly **3904**A, a gearbox assembly **3906**A, and an electric motor assembly **3902**A, and a main shaft **3908**A connected to a flange shaft assembly **3912**A. In some embodiments, electric motor assembly **3902**A may be positioned between the gearbox assembly **3906**A and the shaft flange assembly **3912**A while both the gearbox assembly **3906**A and electric motor assembly **3902**A are aligned along the main shaft **3908**A. Further, an inverter assembly **3904**A may abut the motor-gearbox housing **3910**A and the inverter assembly **3904**A may possesses a rectangular profile. In some embodiments, the inverter assembly **3904**A, electric motor assembly **3902**A, and the gearbox assembly **3908**A may possess common or individual cooling systems. For example, the motor-gearbox housing **3910**A and/or the inverter assembly **3904**A may utilize air flow encountered during flight or generated by the propeller assembly to cool the inverter assembly **3904**A, the gearbox assembly **3906**A, and/or the electric motor assembly **3902**A.

FIG. **39**B illustrates a perspective view of the exemplary electric propulsion system of FIG. **39**A. While FIG. **39**B and FIG. **39**A are related, the figures may possess similar numerals that do not refer to the same elements. In some embodiments, the electric propulsion system **3900**B may include the electric motor assembly **3902**A and gearbox assembly **3906**A may be located within a motor-gearbox housing **3910**B. The motor-gearbox housing **3910**B may be aligned along the main shaft **3908**B, that is connected to a flange shaft assembly **3912**B, and possess cooling fins **3914**B oriented about the circumference of the electric engine housing **3910**B for cooling the electric motor assembly **3902**A and gearbox assembly **3906**A using air flow from a propeller assembly (not pictured) connected to the flange shaft assembly **3912**B or air flow encountered during flight. Further, the invert assembly **3904**B may be mechanically coupled to the rear of the motor-gearbox housing **3910**B and may also utilize air flow in cooling the components of the inverter assembly **3904**B.

FIG. **39**C provides a schematic illustration of an example electric propulsion system **3900**C consistent with embodiments of this disclosure. An electric propulsion system **3900**C may include an electric motor assembly **3902**C and gearbox assembly **3906**C located within a motor-gearbox housing **3910**C. In such an embodiment, a propeller assembly **3912**C may be mechanically coupled to a first end of the motor-gearbox assembly **3910**C. Some embodiments may include a shaft traveling through the electric motor assembly **3902**C and/or gearbox assembly **3906**C to a propeller assembly **3912**C. As shown in FIG. **39**C, an exemplary embodiment may include an electric motor assembly **3902**C located between the gearbox assembly **3906**C and the propeller assembly **3912**C. Further, some embodiments may include an inverter assembly **3904**C abutting a second end of the motor-gearbox assembly **3910**C.

FIG. **39**D provides a schematic illustration of an example electric propulsion system consistent with embodiments of this disclosure. An electric propulsion system **3900**D may include a similar arrangement of components as those depicted in FIG. **39**C. However, an electric propulsion system **3900**D may include a gearbox assembly **3906**D located between an electric motor assembly **3902**D and a propeller assembly **3912**D connected to a first end of a motor-gearbox housing **3910**D with an inverter assembly **3904**D abutting a second end of the motor-gearbox housing **3910**D.

FIGS. **40**A-D are cross-sectional illustrations and illustrations of electric propulsion systems of a VTOL aircraft, consistent with disclosed embodiments. FIG. **40**A illustrates a cross-sectional drawing of an exemplary electric propulsion system **4000**A. The electric propulsion system **4000**A may comprise an inverter assembly **4004**A, a gearbox assembly **4006**A, and an electric motor assembly **4002**A, respectfully, aligned along a main shaft **4020**A that is connected to a shaft flange assembly **4008**A. The gearbox assembly **4006**A and the electric motor assembly **4002**A may be located within a motor-gearbox assembly housing **4012**A and the inverter assembly **4004**A may be located within an inverter assembly housing **4014**A. Further, the inverter assembly housing **4014**A may be mounted to the rear of the motor-gearbox assembly housing **4012**A. Additionally, power connection channels **4018**A may be connected to the connector of the inverter assembly **4004**A located in the inverter assembly housing **4014**A. As depicted in the exemplary embodiment of FIG. **40**A, the power connection channels **4018**A may be connect to the inverter assembly **4004**A behind a heat exchanger **4010**A. Further to this embodiment, the heat exchanger **4010**A may be mounted to the motor-gearbox assembly housing **4012**A and can be used, along with distribution channels (not pictured) to assist in cooling the electric motor assembly **4002**A, gearbox assembly **4006**A, and/or the inverter assembly **4004**A by cooling liquids that are circulated throughout the electric propulsion system **4000**A. It should be understood that although the inverter assembly **4004**A, gearbox assembly **4006**A, and electric motor assembly **4002**A are shown to be consistent with the described stacked assembly inverter assembly, planetary gearbox, and electric motor consisting of a stator and a rotor in this figure, this figure is exemplary and the inverter assembly, gearbox assembly, and electric motor assembly can be of any type as described herein or capable of achieving similar functionality.

FIG. **40**B illustrates a perspective view of the exemplary electric propulsion system **4000**B of FIG. **40**A where the electric motor assembly **4002**A and gearbox assembly **4006**A are located within a motor-gearbox housing **4012**B. In some embodiments, the motor-gearbox housing **4012**B may be aligned along a main shaft **4020**B that is connected to a shaft flange assembly **4008**B. The motor-gearbox housing **4012**B may possess cooling fins **4022**B oriented about the circumference of the motor-gearbox housing **4012**B. Additionally, a heat exchanger **4010**B may be mounted to the motor-gearbox housing **4012**B and may be used in liquid cooling the electric motor assembly **4002**A, gearbox assembly **4006**A, and/or the inverter assembly **4004**A by cooling the liquids that are circulated throughout the electric motor assembly **4002**A, gearbox assembly **4006**A, and/or the inverter assembly **4004**A to cool the respective components. It should be understood that while FIG. **40**B depicts the inner circumference of the heat exchanger to be less than the outer circumference of the motor-gearbox housing, the heat exchanger **4010**B may span any distance equal to or less than the outer circumference of the motor-gearbox housing **4012**B. Further, an inverter assembly housing **4014**B may be mechanically coupled to the rear of the motor-gearbox housing **4012**B and also may possess cooling fins **4024**B oriented about the circumference of the inverter assembly housing **4014**B. Additionally, an inverter assembly housing **4014**B may possess a connection point for power connection

channels **4018**B at a location on the outer edge of an inverter assembly housing **4014**B and behind a heat exchanger **4010**B.

FIG. **40**C provides a schematic illustration of an example electric propulsion system consistent with embodiments of this disclosure. Electric propulsion system **4000**C may comprise components such as an electric motor assembly **4002**C and a gearbox assembly **4006** housed within a motor-gearbox housing **4012**C, and an inverter assembly **4004**C housed in an inverter assembly housing **4014**C. Further, an electric propulsion system may comprise a propeller assembly **4008**C and a heat exchanger **4010**C fluidically coupled to the electric motor assembly **4002**C and the gearbox assembly **4006**C by way of a liquid path **4016**C. Some embodiments may include a liquid path **4016**C comprising a liquid used for cooling, lubricating, or cooling and lubricating components that are fluidically coupled to the heat exchanger **4010**C. In some embodiments, a heat exchanger **4010**C may be directly or indirectly mounted to the motor-gearbox housing **4012**C. Liquid path **4016**C may comprise distribution channels, devices for distributing liquid, or cavities capable of transporting liquid, distributing liquid to components fluidically coupled to the heat exchanger **4010**C, and recirculating the liquid to the heat exchanger **4010**C. Liquid present in the liquid path **4016**C may collect heat from components fluidically coupled to the heat exchanger **4010**C and transfer the heat to incoming air **4018**C passing through the heat exchanger **4010**C. As such, embodiments may include a heat exchanger **4010**C positioned such that incoming air, experienced during flight or from the propeller assembly **4008**C, may pass through and cool the liquid passing through the heat exchanger **4010**C.

FIG. **40**D provides a schematic illustration of an example electric propulsion system consistent with embodiments of this disclosure. An electric propulsion system **4000**D may include a similar arrangement of components as those depicted and described in FIG. **40**C. However, an electric propulsion system **4000**D may include a gearbox assembly **4006**D located between an electric motor assembly **4002**D and a propeller assembly **4008**D connected to a first end of a motor-gearbox housing **4012**D with an inverter assembly **4004**D housed within an inverter assembly housing **4014**D that is connected to a second end of the motor-gearbox housing **4012**D. Electric propulsion system **4000**D may also comprise a gearbox assembly **4006**D and an electric motor assembly **4002**D fluidically coupled to a heat exchanger **4010**D, partially exposed to incoming air **4018**D, via a liquid path **4016**D for the purpose of lubricating and cooling the gearbox assembly **4006**D and electric motor assembly **4002**D.

The liquid paths **4016**C and **4016**D are illustrated with a high level of generality as a simple loop. However, it should be understood that the liquid paths may comprise branches, sub-loops or other segmented paths. In general, the liquid may be circulated in any way that effectively lubricate and cool various components present within the motor-gearbox housing **4012**C and **4012**D.

FIG. **41** is a cross-sectional illustration of an electric propulsion system of a VTOL aircraft, consistent with disclosed embodiments. The electric propulsion system **4100** may comprise an inverter assembly **4104**, a gearbox assembly **4106**, and an electric motor assembly **4102**, respectfully, aligned along a main shaft **4110** that is mechanically coupled to a shaft flange assembly **4112**. The inverter assembly **4104**, a gearbox assembly **4106**, and an electric motor assembly **4102** may be located within housings such as an inverter assembly housing **4116** and a motor-gearbox assembly housing **4114** where the inverter assembly housing **4116** abuts the motor-gearbox assembly housing **4114**. Additionally, power connection channels **4118** may be connected to the high voltage connector located in the inverter assembly in the inverter assembly housing **4116**. Further to this embodiment, a heat exchanger **4108** may be mounted to the motor-gearbox assembly housing **4114** and can be used, along with distribution channels (not pictured) to assist in liquid cooling the electric motor assembly **4102**, gearbox assembly **4106**, and/or the inverter assembly **4104** by cooling the liquids that are circulated throughout the electric motor assembly **4102**, gearbox assembly **4106**, and/or the inverter assembly **4104** to cool the respective components. While in some embodiments the inverter assembly, gearbox assembly, and electric motor assembly are shown to be consistent with the described stacked assembly inverter assembly, planetary gearbox, and electric motor consisting of a stator and a rotor in this figure, this figure is exemplary and the inverter assembly, gearbox assembly, and electric motor assembly can be of any type as described herein or capable of achieving similar functionality.

FIGS. **42**A-B are illustrations of exemplary electric propulsion systems of a VTOL aircraft, consistent with disclosed embodiments. An electric propulsion system **4200** may be cooled using liquid cooling. The electric propulsion system **4200**A may comprise an electric motor assembly located within a motor assembly housing **4202**A and a gearbox assembly located within a gearbox assembly housing **4206**A aligned along a main shaft **4208**A connected to a shaft flange assembly **4210**A. In some embodiments, the electric motor assembly may be located between the gearbox assembly and the shaft flange assembly **4210**A. Further, an inverter assembly housing **4204**A may abut the gearbox assembly housing **4206**A and may also be mechanically connected to power connection channels **4214**A. In some embodiments, a heat exchanger **4212**A may be coupled to the gearbox assembly housing **4206**A and the inverter assembly housing **4204**A. Further, the heat exchanger **4212**A may be fluidically coupled to the electric motor assembly, gearbox assembly, and inverter assembly via liquid flow paths to provide liquid to cool and lubricate the components within the electric motor assembly, gearbox assembly, and inverter assembly. Some embodiments may include flow paths including channels, bores, and cavities capable of transporting liquid throughout the fluidically coupled components of the electric propulsion system **4200**B.

FIG. **42**B illustrates a perspective view of an exemplary electric propulsion system **4200**B as discussed with respect to FIG. **42**A that is liquid cooled using a heat exchanger **4212**B that is fluidically coupled to the electric motor assembly, gearbox assembly, and inverter assembly. Exemplary electric propulsion system **4200**B may comprise an electric motor assembly located within a motor assembly housing **4202**B and a gearbox assembly housed with a gearbox assembly housing **4206**B aligned along a main shaft **4208**B that is mechanically coupled to a flange shaft assembly **4210**B. Some embodiments may include the motor assembly housing **4202**B and the gearbox assembly housing **4206**B possessing substantially circular profiles with equal radii. An exemplary electric propulsion system **4200**B may also comprise an inverter assembly housed within an inverter assembly housing **4204**B with a substantially circular profile that is mechanically coupled to power connection channels **4214**B and to the gearbox assembly housing **4206**B. Some embodiments may include an inverter assem-

bly housing **4204**B possessing a radius that is greater than the radii of the gearbox assembly housing **4206**B and/or the motor assembly housing **4202**B.

FIGS. **43**A-D are illustrations and schematic diagrams illustrating exemplary electric propulsion systems of a VTOL aircraft, consistent with disclosed embodiments. The electric propulsion system **4300**A may comprise, a gearbox assembly **4306**A, an electric motor assembly **4302**A, and an inverter assembly **4304**A, respectfully, aligned along a main shaft **4316**A that is connected to a shaft flange assembly **4308**A. The inverter assembly **4304**A may be located within an inverter assembly housing **4312**A. Further, the gearbox assembly **4306**A and electric motor assembly **4302**A may be located within a motor-gearbox assembly housing **4310**A. Some embodiments may include an inverter assembly housing **4312**A, and thus an inverter assembly **4303**A, located between the motor-gearbox assembly housing **4310**A and the shaft flange assembly **4308**A. In such a configuration, the main shaft **4316**A may pass through the gearbox assembly **4306**A, the electric motor assembly **4302**A, and the inverter assembly **4304**A. Additionally, power connection channels **4314**A may extend from a boom, wing, or fuselage of an aircraft past the motor-gearbox assembly housing **4313**A to a connection point in the inverter assembly housing **4312**A.

FIG. **43**B illustrates a perspective view of an exemplary embodiment of an electric propulsion system **4300**B as discussed with respect to FIG. **43**A that is air cooled. The electric propulsion system **4300**B may comprise an electric motor assembly **4302**A and a gearbox assembly **4306**A housed within the motor-gearbox housing **4310**B and an inverter assembly housed within the inverter assembly housing **4312**B. The motor-gearbox housing **4310**B and the inverter assembly housing **4312**B may possess substantially circular profiles with substantially equivalent radii and be aligned along a main shaft **4316**B that is connected to a flange shaft assembly **4308**B. Some embodiments may include the inverter assembly housing **4312**B positioned between the motor-gearbox assembly housing **4310**B and the flange shaft assembly **4308**B with power connection channels **4314**B extending from the boom, wing, or fuselage of an aircraft past the motor-gearbox assembly housing **4310**B to a connection point in the inverter assembly housing **4312**B. Further embodiments may include motor-gearbox housing **4310**B and the inverter assembly housing **4312**B that possess cooling fins **4320**B and **4318**B, respectfully, on the outer surface of each housing. The cooling fins **4320**B, **4318**B may transfer heat from the components housed within the motor-gearbox housing **4310**B and the inverter assembly housing **4312**B to the external air passing through the cooling fins **4320**B, **4318**B.

FIG. **43**C provides a schematic illustration of an exemplary electric propulsion system **4300**C consistent with embodiments of this disclosure. An electric propulsion system **4300**C may include a similar arrangement of components as those depicted and described in FIG. **43**A and FIG. **43**B. However, an electric propulsion system **4300**C may include a gearbox assembly **4306**C positioned between an electric motor assembly **4302**C and an inverter assembly **4304**C that is connected to a flange shaft assembly **4308**C. In such a configuration, the main shaft **4316**A, not pictured in this illustration, may pass through the electric motor assembly **4302**C, the gearbox assembly **4306**C, and the inverter assembly **4304**C. Additionally, one or more power connection channels **4314**C may extend from a boom of an aircraft past the motor-gearbox assembly housing **4310**C to a connection point in the inverter assembly housing **4312**C.

FIG. **43**D provides a schematic illustration of an example electric propulsion system **4300**D consistent with embodiments of this disclosure. An electric propulsion system **4300**D may include a similar arrangement of components, and labeling, as those depicted and described in FIGS. **43**A-C. FIG. **43**D depicts a similar electric propulsion system **4300**D to that of the electric propulsion system **4300**C in FIG. **43**C where an inverter assembly housing **4312**D is connected to power connection channels **4314**D extending from the boom of an aircraft and abuts a flange shaft assembly **4308**D and a motor assembly housing **4310**D. However, the motor assembly housing **4310**D houses an electric motor assembly **4302**D that provides torque to the flange shaft assembly **4308**D, via a main shaft that travels through the inverter assembly **4304**D, without a gear reduction from a gearbox assembly.

FIGS. **44**A-C are schematic diagrams illustrating exemplary electric propulsion systems of a VTOL aircraft, consistent with disclosed embodiments. An exemplary electric propulsion system **4400**A may comprise an inverter assembly **4404**A housed within an inverter assembly housing **4416**A positioned between a shaft flange assembly **4410**A and a divider plate **4408**A. In addition to the inverter assembly housing **4416**A, the divider plate **4408**A may be coupled to a motor-gearbox housing **4414**A that houses an electric motor assembly **4402**A and a gearbox assembly **4406**A. In such a configuration, the inverter assembly housing **4416**A may comprise an attachment point for power connection channels **4420**A extending from the boom, wing, or fuselage of the aircraft. Further, such a configuration may comprise a main shaft mechanically coupled to the shaft flange assembly **4410**A that travels through the inverter assembly housing **4416**A, and in some embodiments the inverter assembly **4404**A, and divider plate **4408**A to the electric motor assembly **4402**A. Some embodiments may include the main shaft extending from a first end of the motor-gearbox assembly housing **4414**A that is mechanically coupled to the divider plate **4408**A to a second end of the housing and thus, through or past the gearbox assembly **4406**A to the electric motor assembly **4402**A. Some embodiments may include a heat exchanger **4412**A fluidically coupled to the inverter assembly **4404**A, the gearbox assembly **4406**A, and the electric motor assembly **4402**A via a liquid flow path **4418**A. A divider plate **4408**A may act to seal off an upper portion of the motor-gearbox assembly housing **4414**A via an end bell assembly and act to seal off a lower portion of the inverter assembly housing **4416**A via a thermal plate. Divider plate **4408**A may comprise grooves, bores, or other conduits configured to distribute liquid to cool the inverter assembly **4404**A and cool and lubricate the gearbox assembly **4406**A and the electric motor assembly **4402**A. The liquid flow path **4418**A may comprise circulating a liquid to extract heat from the components of the inverter assembly **4404**A, gearbox assembly **4406**A, and the electric motor assembly **4402**A and transfer that heat to an air flow **4422**A that passes through the cooling fins of the heat exchanger **4412**A.

FIG. **44**B provides a schematic illustration of an example electric propulsion system **4400**B consistent with embodiments of this disclosure. An electric propulsion system **4400**B may include a similar arrangement of components as those depicted and described in FIG. **44**A. FIG. **44**B depicts a similar electric propulsion system **4400**B to that of the electric propulsion system **4400**A in FIG. **44**A where an inverter assembly housing **4416**A is connected to power connection channels **4420**A extending from the boom, wing, or fuselage of an aircraft and is positioned between the

flange shaft assembly **4410**B and the divider plate **4408**B. However, the divider plate **4408**B may also be coupled to a motor-gearbox assembly housing **4414**B that houses a gearbox assembly **4406**B that is located behind an electric motor assembly **4402**B relative to the divider plate **4408**B. Some embodiments may include a liquid flow path **4418**B that fluidically couples a heat exchanger to the inverter assembly **4404**B, the gearbox assembly **4406**B, and the electric motor assembly **4402**B. Further, the liquid flow path **4418**B may comprise circulating a liquid to extract heat from the components of the inverter assembly **4404**B, gearbox assembly **4406**B, and the electric motor assembly **4402**B and transfer that heat to an air flow **4422**B that passes through the cooling fins of the heat exchanger **4412**B.

FIG. **44**C provides a schematic illustration of an example electric propulsion system **4400**C consistent with embodiments of this disclosure. An electric propulsion system **4400**C may include a similar arrangement of components as those depicted and described in FIGS. **44**A-B. FIG. **44**C depicts a similar electric propulsion system **4400**C to that of the electric propulsion systems **4400**A in FIGS. **44**A and **4400**B in FIG. **44**B. However, electric propulsion system **4400**C comprises a direct drive system as discussed herein, wherein the motor assembly housing **4414**C houses an electric motor assembly **4402**C that provides torque to a shaft flange assembly **4410**C without a gear reduction via gearbox assembly.

The liquid flow paths **4418**A, **4418**B, and **4418**C are illustrated with a high level of generality as a simple loop. In some embodiments, liquid flow paths may comprise branches, sub-loops or other segmented paths. In general, the liquid may be circulated in any way that effectively lubricate and cool various components present within the motor-gearbox housings **4414**A-C and inverter assembly housings **4416**A-C.

FIGS. **45**A-D are schematic diagrams illustrating exemplary electric propulsion systems of a VTOL aircraft, consistent with disclosed embodiments. The electric engine **4500**A may comprise an electric motor assembly housed within a circular motor assembly housing **4510**A with an inverter assembly housed with an inverter assembly housing **4512**A that is coupled to the outer surface of the motor assembly housing **4510**A. While FIG. **45**A depicts an inverter assembly housing **4512**A tangentially coupled to the outer surface of the motor assembly housing **4510**A, in some embodiments the base of the inverter assembly housing **4512**A may be coupled to the outer surface of the motor assembly housing **4510**A in any configuration, including the base of the inverter assembly housing having a curvature radius similar to the radius of the electric motor assembly housing **4510**A. Further, the inverter assembly housing **4512**A may comprise busbars **4516**A that are connected to the motor assembly housing **4510**A to supply alternating current to the electric motor assembly. The inverter assembly housing **4512**A may also comprise cooling fins mounted to a portion of the inverter assembly housing **4512**A that is opposite of the coupled portion of the inverter assembly housing **4512**A. The cooling fins **4514**A may act to remove heat generated from components present within the inverter assembly and transfer that heat to air flow through the cooling fins **4514**A.

FIG. **45**B illustrates a drawing of a perspective view of an exemplary embodiment of an electric engine **4500**B consistent with this disclosure. An exemplary electric engine **4500**B may include a similar arrangement of components as those depicted and described in FIG. **45**A, including similar labeling of components such that similar numerical labeling corresponds to similar components across FIG. **45**A and FIG. **45**B. Exemplary electric engine **4500**B may comprise an electric motor assembly housed within an electric motor assembly housing **4510**B that is coupled to an inverter assembly housing **4512**B that houses an inverter assembly. Further, an electric engine **4500**B may comprise busbars **4516**B that are connected to the motor assembly housing **4510**B to supply alternating current to the electric motor assembly. Similar to FIG. **45**A, electric engine **4500**B may possess an inverter assembly housing **4512**B comprising cooling fins **4514**B that may act to remove heat generated from components present within the inverter assembly and transfer that heat to an external air flow through the cooling fins **4514**B. Additionally, an inverter assembly housing **4512**B may comprise a connection point for power connection channels **4518**B originating within the boom, wing, or fuselage of the aircraft.

FIG. **45**C schematically depicts an exemplary embodiment of an electric engine **4500**C consistent with this disclosure. An exemplary electric engine **4500**C may include a similar arrangement of components as those depicted and described in FIG. **45**A and FIG. **45**B, including similar labeling of components such that similar numerical labeling corresponds to similar components across FIG. **45**A, FIG. **45**B, and FIG. **45**C. Electric engine **4500**C may comprise an electric motor **4502**C and a gearbox assembly **4506**C housed within a motor assembly housing **4510**C that is mechanically coupled to an inverter assembly housing **4512**C that houses an inverter assembly **4504**C. As shown in FIG. **45**C, some embodiments may be configured with a gearbox assembly **4506**C located between an electric motor assembly **4502**C and a propeller assembly **4508**C. In some embodiments, power connection channels **4518**C may be connected to the inverter assembly housing **4512**C that originate from another location within the boom, wing, or aircraft.

FIG. **45**D schematically depicts an exemplary embodiment of an electric engine **4500**D consistent with this disclosure. An exemplary electric engine **4500**D may include a similar arrangement of components as those depicted and described in FIGS. **45**A-C, including similar labeling of components such that similar numerical labeling corresponds to similar components across FIGS. **45**A-C. Electric engine **4500**D may comprise an electric engine **4502**D and a gearbox assembly **4506**D housed within a motor assembly housing **4510**D that is coupled to an inverter assembly housing **4512**D that houses an inverter assembly **4504**D. Some embodiments may include a configuration such that an electric motor assembly **4502**D is located between the gearbox assembly **4506**D and a propeller assembly **4508**D. In some embodiments, power connection channels **4518**D may be connected to the inverter assembly housing **4512**D that originate from another location within the boom, wing, or aircraft.

FIGS. **46**A-B are schematic diagrams illustrating exemplary electric propulsion systems of a VTOL aircraft, consistent with disclosed embodiments. An electric propulsion system **4600**A may comprise an electric motor assembly **4602**A and a gearbox assembly **4606**A housed within a motor assembly housing **4612**A that is coupled to an inverter assembly housing **4614**A that houses an inverter assembly **4604**A. Some embodiments may include a gearbox assembly **4606**A positioned between an electric motor assembly **4602**A and a propeller assembly **4608**A. Some embodiments may include a heat exchanger **4610**A coupled to the motor assembly housing **4612**A and fluidically coupled to the electric motor assembly **4602**A and gearbox assembly

4606A via liquid flow paths 4616A. Liquid flow paths 4616A may be used to extract heat from components present within the electric motor assembly 4602A and propeller assembly 4608A. Liquid flow paths 4616A may transport extracted heat to heat exchanger 4610A, which transfers heat to an air flow 4618A passing through the cooling fins of the heat exchanger 4610A.

FIG. 46B schematically depicts an exemplary embodiment of an electric propulsion system 4600B consistent with this disclosure. An exemplary electric engine 4600B may include a similar arrangement of components as those depicted and described in FIG. 46A, including similar labeling of components such that similar numerical labeling corresponds to similar components across FIG. 46A and FIG. 46B. An electric propulsion system 4600B may comprise an electric motor assembly 4602B and a gearbox assembly 4606B housed within a motor assembly housing 4612B that is coupled to an inverter assembly housing 4614B that houses an inverter assembly 4604B. Some embodiments may include an electric motor assembly 4602B positioned between a gearbox assembly 4606B and a propeller assembly 4608B. Some embodiments may include a heat exchanger 4610B that is coupled to the motor assembly housing 4612B and fluidically coupled to the electric motor assembly 4602B and gearbox assembly 4606B via liquid flow paths 4616B. Liquid flow paths 4616B may be used to extract heat from components present within the electric motor assembly 4602B and propeller assembly 4608B. Liquid flow paths 4616B may transport extracted heat to heat exchanger 4610B, which transfers heat to an air flow 4618B passing through the cooling fins of the heat exchanger 4610B.

The liquid paths 4616A and 4616B are illustrated with a high level of generality as a simple loop. In some embodiments, the liquid paths may comprise branches, sub-loops or other segmented paths. In general, the liquid may be circulated in any way that effectively lubricate and cool various components present within the motor assembly housing 4612A and 4612B.

FIGS. 47A-B are schematic diagrams illustrating exemplary electric propulsion systems of a VTOL aircraft, consistent with disclosed embodiments. The electric propulsion system 4700A may comprise an electric motor assembly 4702A and a gearbox assembly 4706A located within a motor-gearbox housing 4710A. The embodiment depicted in FIG. 47A may include a main shaft traveling through or from the electric motor assembly 4702A to the propeller assembly 4708A located outside of the motor-gearbox housing 4710A. Further, the gearbox assembly 4706A may not share an axis with the electric motor assembly 4702A or the main shaft that is used by the electric motor assembly 4702A to provide torque to the propeller assembly 4708A. In such embodiments, the gearbox assembly 4706A may still provide gear reduction between the electric motor assembly 4702A and propeller assembly 4708A. Some embodiments may also include an inverter assembly 4704A located in an inverter assembly housing 4712A that is mounted directly or indirectly to the motor-gearbox housing 4710A. While the inverter assembly 4704A is shown to be mounted to an outside edge of the motor-gearbox housing 4710A, in some embodiments an inverter assembly may have a circular profile that wraps around, or partially around, the motor-gearbox housing 4710A. Further, some embodiments may include an inverter assembly housing 4704A that may be coupled to an outer surface of the motor-gearbox assembly housing opposite the propeller assembly 4708A In some embodiments, the electric motor assembly 4702A, the gearbox assembly 4706A, and the inverter assembly 4704A may each possess various components giving rise a various volumes for each assembly, and as such, the motor-gearbox housing 4710A and inverter assembly housing 4712A may possess various profiles and volumes based on their respective assembly configurations.

FIG. 47B illustrates a cutaway view of an electric propulsion system 4700B. While FIG. 47B may be related to FIG. 47A, the elements identified by similar numerals may not refer to the same elements across the figures. Some embodiments of an electric propulsion system 4700B may comprise an electric motor assembly 4702A and a gearbox assembly 4706A located in a common motor-gearbox housing 4702B with a shaft 4712B traveling through the electric motor assembly 4702A. Some embodiments may include a propeller assembly that is mechanically coupled to the shaft 4712B. In some embodiments, an electric motor assembly 4702A may include a stator 4704B with stator windings 4706B and a rotor 4710B possessing a magnet array 4708B aligned along the shaft 4712B. In some embodiments, the rotor 4710B may be connected directly or indirectly to a secondary shaft 4716B surrounding the shaft 4712B such that the secondary shaft 4716B rotates at a speed equal to the rotor 4710B speed. Further to this example, embodiments of the secondary shaft 4716B may have splined shaft that interfaces with a gearbox assembly 4706A, adjacent to the electric motor assembly 4702A, where the gearbox assembly 4706A also interfaces with the shaft 4712B providing torque to the propeller assembly 4708A. Embodiments of a gearbox assembly 4706A as described herein may include at least a first gear 4722B, a second gear 4720B, and a gearbox shaft 4718B connecting them. In some embodiments, the radius of the first gear 4722B may be greater than the diameter of the second gear 4720B or vice versa. As such, the splined portion of the secondary shaft 4716B may interact with and rotate the first gear 4722B at the speed of the rotating rotor 4710B. A rotating first gear 4722B may drive a rotation of the gearbox shaft 4718B and the second gear 4720B. The second gear 4720B of the gearbox assembly 4706A may be interfaced with a portion of the shaft 4714B having a radius differing from the radius of the portion of the shaft 4712B connecting to the propeller assembly 4708A. In such an embodiment, the gearbox shaft 4718B of the gearbox assembly 4706A may be positioned to not share an axis with the shaft 4712B or the electric motor assembly 4702A yet still provide a gear reduction to the shaft 4712B providing torque to the propeller assembly 4708A.

FIG. 48 is a schematic diagram illustrating an exemplary electric propulsion system of a VTOL aircraft, consistent with disclosed embodiments. Electric propulsion system 4800 may comprise an electric engine housed within an electric engine housing 4802 that is aligned along a shaft 4804 traveling from the electric engine housing 4802 to a propeller assembly 4808, comprising propellers 4810. In some embodiments, the electric propulsion system 4800 may include a heat exchanger 4806 fluidically coupled, via liquid flow paths present within the electric engine housing 4802, to components of the electric engine. Some embodiments may include an electric engine housing 4802 coupled to a boom 4816 of an aircraft via an apparatus 4814 for articulating the position of the electric propulsion system. Some embodiments may also include a blade pitch actuator 4812 coupled to the rear of the electric engine housing 4802. Components of the electric engine may generate various amounts of heat depending on the phase of flight an aircraft is engaged in. For example, components of an electric

engine in a vertical takeoff-and-landing aircraft may generate more heat during a hover phase than during a cruise phase of flight, and therefore, may require more air flow through a heat exchanger **4806** to cool liquid that is being used to cool and/or lubricate components of the electric engine in a hover phase than a cruise phase. As such, some embodiments may include a boom **4816** comprising a cavity **4818** in the boom wherein the heat exchanger **4806** may be housed during cruise phase. The cavity **4818** may act to block or reduce air flow entering the heat exchanger during flight due to the reduction of air required to cool the system in various stages of flight.

The embodiments may further be described using the following clauses:

Clause Set A: 1. An electric engine for a vertical takeoff-and-landing aircraft, comprising: an electric motor assembly including a stator and a rotor; an inverter assembly; a gearbox assembly including: a sun gear; a main shaft including a length of the main shaft that extends from a first end of the main shaft through the gearbox assembly and through the electric motor assembly to a second end of the main shaft; and a hydrodynamic bearing located between the main shaft and sun gear.

2. The electric engine of clause A1, further comprising a bearing including an inner race mechanically coupled to the main shaft and an outer race mechanically coupled to the rotor.

3. The electric engine of clause A2, wherein the bearing comprises a deep groove ball bearing.

4. The electric engine of clause A2, wherein the bearing comprises a rolling bearing.

5. The electric engine of clause A1, wherein the hydrodynamic bearing includes oil.

6. The electric engine of clause A1, further comprising a heat exchanger including one or more liquid flow paths fluidically coupled to the gearbox assembly and electric motor assembly.

7. The electric engine of clause A6, wherein the liquid flow paths are configured to allow flow of oil.

8. The electric engine of clause A6, wherein the hydrodynamic bearing comprises liquid from the one or more liquid flow paths.

9. The electric engine of clause A1, wherein the main shaft travels through a hollow sun gear.

10. The electric engine of clause A9, wherein the hydrodynamic bearing is disposed between outer surface of the main shaft and an inner surface of the hollow sun gear.

11. The electric engine of clause A2, wherein the bearing is mechanically coupled to a flange configured to rotate with the shaft, wherein the flange is mechanically coupled to the main shaft.

12. The electric engine of clause A2, wherein the bearing is configured to support the rotor.

13. The electric engine of clause A1, wherein the hydrodynamic bearing is configured to counteract a rotor moment load experienced by the sun gear.

14. The electric engine of clause A1, wherein the gearbox assembly further comprises a planetary gear.

15. The electric engine of clause A1, wherein the gearbox assembly further comprises a ring gear.

16. The electric engine of clause A1, wherein the gearbox assembly further comprises a planetary carrier.

17. An electric engine for a vertical takeoff-and-landing aircraft, comprising: an electric motor assembly including a stator and a rotor; an inverter assembly; a gearbox assembly including: a sun gear; and a bearing including an outer race mechanically coupled to an inner surface of the rotor.

18. The electric engine of clause A17, wherein the sun gear is disposed concentric with the rotor.

19. The electric engine of clause A18, wherein the bearing is configured to guide a rotation of the sun gear and the rotor.

20. The electric engine of clause A18, wherein the outer race of the bearing is mechanically coupled to an inner surface of a hollow sun gear.

21. The electric engine of clause A20, further comprising a shoulder of a first end of the sun gear disposed concentric with a shoulder of a first end of the rotor, wherein the shoulders cooperate to restrict movement of the bearing in an axial direction of the shaft.

22. The electric engine of clause A20, wherein a diameter of the outer race of the bearing is substantially the same as a diameter of the inner surface of a first end of the sun gear and a diameter of the inner surface of a first end of the rotor.

23. The electric engine of clause A20, wherein a first end of the sun gear and a first end of the rotor meet on the outer race of the bearing.

24. The electric engine of clause A17, wherein the outer race of the bearing is configured to align a first end of the sun gear with a first end of the rotor such that the first end of the sun gear abuts the first end of the rotor.

25. The electric engine of clause A17, wherein the bearing comprises a rolling bearing.

26. The electric engine of clause A18, wherein the sun gear and rotor are removably attached.

27. The electric engine of clause A17, wherein the gearbox assembly further comprises a planetary gear.

28. The electric engine of clause A17, wherein the gearbox assembly further comprises a ring gear.

29. The electric engine of clause A17, wherein the gearbox assembly further comprises a planetary carrier.

30. An electric engine for a vertical takeoff-and-landing aircraft, comprising: an inverter assembly; a gearbox assembly including: a sun gear; an electric motor assembly; a main shaft including a length of the main shaft that extends from a first end of the main shaft through the gearbox assembly and through the electric motor assembly to a second end of the main shaft; and a hydrodynamic bearing located between the main shaft and sun gear, wherein the inverter assembly, the gearbox assembly, and the electric motor assembly are substantially aligned along an axis and each abuts at least one of the others.

31. An electric engine for a vertical takeoff-and-landing (VTOL) aircraft comprising the aircraft of any clauses A1-A30.

Clause Set B: 1. A method for balancing a rotor of an electrical engine of an electrical propulsion system comprising: identifying an axis of rotation of a rotor, wherein the rotor comprises a sacrificial layer having a mass M formed along a circumference of the rotor; determining an imbalance present in the rotor by rotating the rotor about the axis of rotation, wherein determining an imbalance includes marking the rotor, rotating the rotor, and detecting an amplitude of the imbalance; calculating an amount of mass k to add or remove at a position p along the sacrificial layer such that a center of mass of the rotor coincides with the axis of rotation of the rotor; and removing an amount of mass r from the sacrificial layer such that an amount of remainder mass n is present along the circumference of the rotor.

2. The method of clause B1, wherein the amount of remainder mass n is equal to the amount of mass k.

3. The method of clause B1, further comprising a thickness of the sacrificial layer based on the precision of the machine machining the rotor.

4. The method of clause B1, wherein the rotor possesses a number of sacrificial layers greater than two.

5. The method of clause B1, wherein rotating the rotor about the axis of rotation includes rotating at a speed less than operating speed.

6. The method of clause B1, wherein rotating the rotor about the axis of rotation includes rotating at a speed less than the first resonance of the rotor.

7. The method of clause B1, wherein the remainder mass n is present at the position p when the amount of mass k is calculated to be added.

8. The method of claim **1**, wherein the remainder mass n is present at a position q when the amount of mass k is calculated to be removed, wherein the position q is on the opposite side of the sacrificial layer from the position p.

9. The method of clause B1, wherein removing the amount of mass r includes an amount of mass equal to or less than M−k.

10. The method of clause B1, wherein detecting the amplitude of the imbalance may include using a machine to track the rotor mark during rotation and calculate the amplitude of the imbalance.

11. The method of clause B10, wherein the machine to track the rotor mark during rotation and calculate the amplitude of the imbalance may include an electric eye.

12. The method of clause B10, wherein the machine to track the rotor mark during rotation and calculate the amplitude of the imbalance may include an encoder.

13. The method of clause B1, wherein removing includes machining away.

14. The method of clause B1, wherein removing include using a machine with a milling resolution that is less than or equal to five microns.

15. The method of clause B1, wherein the rotor is made of aluminum.

16. The method of clause B1, wherein the sacrificial layer is made of aluminum.

17. The method of clause B1, further comprising a first end of the rotor and a second end of the rotor, wherein each end comprises a substantially circular profile, wherein a first sacrificial layer is posited a first distance from the first end of the rotor and a second sacrificial layer is posited a second distance from the second end of the rotor.

18. The method of clause B17, wherein the first sacrificial layer and the second sacrificial layer have substantially similar depths and widths.

19. The method of clause B17, wherein the first distance is substantially similar to the second distance.

20. The method of clause B17, wherein position p is located along either the first sacrificial layer or second sacrificial layer.

21. The method of clause B1, wherein the sacrificial layer includes N grooves defining N sacrificial portions, wherein the grooves are configured to guide oil flow through the rotor in normal operation.

22. The method of clause B1, wherein removing an amount of mass r from the sacrificial layer includes removing at least 50% of the volume of the sacrificial layer.

23. The method of clause B1, wherein removing an amount of mass r from the sacrificial layer includes removing at least 60% of the mass of the sacrificial layer.

24. The method of clause B1, wherein removing an amount of mass r from the sacrificial layer includes removing at least 70% of the mass of the sacrificial layer.

25. The method of clause B1, wherein removing an amount of mass r from the sacrificial layer includes removing at least 75% of the mass of the sacrificial layer.

26. The method of clause B1, wherein removing an amount of mass r from the sacrificial layer includes removing at least 80% of the mass of the sacrificial layer.

27. The method of clause B1, wherein removing an amount of mass r from the sacrificial layer includes removing at least 90% of the mass of the sacrificial layer.

28. The method of clause B1, wherein removing an amount of mass r from the sacrificial layer includes removing at least 100% of the mass of the sacrificial layer.

29. The method of claim **1**, wherein removing an amount of mass r from the sacrificial layer includes using a machine capable of removing less than 0.1% of the sacrificial layer material by volume.

30. A method for balancing a rotor of an electrical engine of an electrical propulsion system comprising the method of any clauses B1-B29.

Clause Set C: 1. A method for balancing a rotor assembly of an electrical engine of an electrical propulsion system comprising: identifying an axis of rotation of a rotor, wherein the rotor comprises a sacrificial layer having a mass M formed along a circumference of the rotor; determining an imbalance present in the rotor by rotating the rotor about the axis of rotation, wherein determining an imbalance includes marking the rotor, rotating the rotor, and detecting an amplitude of the imbalance; calculating an amount of mass k to add at a position p along the sacrificial layer such that a center of mass of the rotor coincides with the axis of rotation of the rotor; removing an amount of mass r from the sacrificial layer such that an amount of remainder mass n is present along the circumference of the rotor; identifying an axis of rotation of a rotor assembly, wherein the rotor assembly comprises the rotor mechanically coupled to a sun gear; determining an imbalance present in the rotor assembly by rotating the rotor assembly about the axis of rotation, wherein determining an imbalance includes marking the rotor assembly, rotating the rotor assembly, and detecting an amplitude of the imbalance; calculating a number j of rivets to add to the rotor assembly such that the center of mass of the rotor assembly coincides with the axis of rotation of the rotor assembly; and adding the j rivets to the rotor assembly.

2. The method of clause C1, wherein the amount of remainder mass n is equal to the amount of mass k.

3. The method of clause C1, further comprising a thickness of the sacrificial layer based on the precision of the machine machining the rotor.

4. The method of clause C1, wherein the rotor possesses an even number of sacrificial layers greater than two.

5. The method of clause C1, wherein rotating the rotor about the axis of rotation includes rotating at a speed less than operating speed.

6. The method of clause C1, wherein rotating the rotor about the axis of rotation includes rotating at a speed less than the first resonance of the rotor.

7. The method of clause C1, wherein the remainder mass n is present at the position p.

8. The method of clause C1, wherein the imbalance occurs when the axis of rotation does not align with a center of mass of the rotor.

9. The method of clause C1, wherein removing the amount of mass r includes an amount of mass equal to or less than M−k.

10. The method of clause C1, wherein detecting the amplitude of the imbalance may include using a machine to track the rotor mark during rotation and calculate the amplitude of the imbalance.

11. The method of clause C10, wherein the machine to track the rotor mark during rotation and calculate the amplitude of the imbalance may include an electric eye.

12. The method of clause C10, wherein the machine to track the rotor mark during rotation and calculate the amplitude of the imbalance may include an encoder.

13. The method of clause C1, wherein removing includes machining away.

14. The method of clause C1, wherein the rotor is made of aluminum.

15. The method of clause C1, wherein the sacrificial layer is made of aluminum.

16. The method of clause C1, further comprising a first end of the rotor and a second end of the rotor, wherein each end comprises a substantially circular profile, wherein a first sacrificial layer is posited a first distance from the first end of the rotor and a second sacrificial layer is posited a second distance from the second end of the rotor.

17. The method of clause C1, wherein the first sacrificial layer and the second sacrificial layer have substantially similar depths and widths.

18. The method of clause C1, wherein the first distance is substantially similar to the second distance.

19. The method of clause C1, wherein position p is located along one of the first sacrificial layer or second sacrificial layer.

20. The method of clause C1, wherein the sacrificial layer includes N grooves defining N sacrificial portions, wherein the grooves are configured to guide oil flow through the rotor in normal operation.

21. The method of clause C1, wherein rotating the rotor assembly about the axis of rotation includes rotating at a speed less than operating speed.

22. The method of clause C1, wherein rotating the rotor assembly about the axis of rotation includes rotating at a speed less than the first resonance of the rotor assembly.

23. The method of clause C1, wherein detecting the amplitude of the imbalance may include using a machine to track the rotor assembly mark during rotation and calculate the amplitude of the imbalance.

24. The method of clause C23, wherein the machine to track the rotor assembly mark during rotation and calculate the amplitude of the imbalance may include an electric eye.

25. The method of clause C23, wherein the machine to track the rotor assembly mark during rotation and calculate the amplitude of the imbalance may include an encoder.

26. The method of clause C1, wherein the sun gear is disposed concentric with the rotor.

27. The method of clause C1, wherein the sun gear and rotor are removably attached.

28. The method of clause C1, wherein the rotor possesses a circular layer comprising a plurality of through holes.

29. The method of clause C28, wherein the rivets are affixed to the plurality of through holes.

30. The method of clause C28, wherein the sun gear and rotor are removably attached via the plurality of through holes.

31. The method of clause C1, wherein the rivets are aluminum.

32. The method of clause C1, wherein the rivets are steel.

33. The method of clause C1, wherein the rivets are copper.

34. The method of clause C1, wherein at least two rivets are of different materials.

35. The method of clause C1, wherein the number j of rivets is an integer.

36. The method of clause C1, wherein the rotor assembly includes the rotor having the remainder mass n present along the circumference of the rotor.

37. The method of clause C1, wherein removing an amount of mass r from the sacrificial layer includes removing up to 50% of the mass of the sacrificial layer.

38. The method of clause C1, wherein removing an amount of mass r from the sacrificial layer includes removing up to 60% of the mass of the sacrificial layer.

39. The method of clause C1, wherein removing an amount of mass r from the sacrificial layer includes removing up to 70% of the mass of the sacrificial layer.

40. The method of clause C1, wherein removing an amount of mass r from the sacrificial layer includes removing up to 75% of the mass of the sacrificial layer.

41. The method of clause C1, wherein removing an amount of mass r from the sacrificial layer includes removing up to 80% of the mass of the sacrificial layer.

42. The method of clause C1, wherein removing an amount of mass r from the sacrificial layer includes removing up to 90% of the mass of the sacrificial layer.

43. The method of clause C1, wherein removing an amount of mass r from the sacrificial layer includes removing up to 100% of the mass of the sacrificial layer.

44. The method of clause C1, wherein the remainder mass n is present at a position q when the amount of mass k is calculated to be removed, wherein the position q is on the opposite side of the sacrificial layer from the position p.

45. The method of clause C1, wherein removing include using a machine with a milling resolution that is less than or equal to five microns.

46. A method for balancing a rotor assembly of an electrical engine of an electrical propulsion system comprising the method of any clauses C1-C45.

Clause Set D: 1. An electrical propulsion system having a gearbox apparatus that delivers power from an electrical engine via a reverse torque path, the gearbox apparatus comprising: a planetary gear mechanically coupled to a rotor of an electric motor; a planetary carrier that is connected to at least one shaft from a set of shafts that extends concentrically from the at least one planetary gear; a main shaft comprising: a first end of the main shaft extending through the planetary carrier, a second end of the main shaft mechanically coupled to a propeller assembly, and a length of the main shaft extending the first end of the main shaft through a sun gear and rotor to a second end of the main shaft; and a carrier cover that is connected to the main shaft and is connected to at least one shaft from a set of shafts that extends concentrically from the at least one planetary gear.

2. The gearbox apparatus of clause D1, wherein a rotation of the carrier cover drives a rotation of the main shaft.

3. The gearbox apparatus of clause D1, wherein the sun gear mechanically coupled to the rotor of the electric motor, wherein the electrical motor further comprises a stator.

4. The gearbox apparatus of clause D1, wherein the sun gear is hollow.

5. The gearbox apparatus of clause D1, further comprising a ring gear that interfaces with the at least one planetary gear.

6. The gearbox apparatus of clause D1, wherein the planetary gear comprises a compound planetary gear.

7. The electrical propulsion system of clause D1, wherein the gearbox comprises a multi-stage planetary gearset.

8. The electrical propulsion system of clause D1, further comprising a cooling system that cools the gearbox with an amount of oil equal to or less than 1 quart.

9. The electrical propulsion system of clause D1, further comprising a cooling system that cools the gearbox with an amount of oil equal to or less than 1.5 quarts.

10. The electrical propulsion system of clause D1, further comprising a cooling system that cools the gearbox with an amount of oil equal to or less than 2 quarts.

11. The electrical propulsion system of clause D1, further comprising a cooling system that cools the gearbox with an amount of oil equal to or less than 2.5 quarts.

12. The electrical propulsion system of clause D1, further comprising a cooling system that cools the gearbox with an amount of oil equal to or less than 3 quarts.

13. The electrical propulsion system of clause D1, further comprising a cooling system that cools the gearbox with an amount of oil equal to or less than 5 quarts.

14. The gearbox apparatus of clause D1, further comprising a gear ratio that is about 6.45.

15. The gearbox apparatus of clause D1, wherein the sun gear, the planetary gear, the ring gear, the planetary carrier, and the carrier cover are disposed concentric with the main shaft.

16. A method of delivering power from an electrical engine using a gearbox via a reverse torque path, comprising: driving a planetary gear that is mechanically coupled to a rotor of an electric motor, wherein the at least one planetary gear is driven by the sun gear and interfaces with a ring gear; driving a planetary carrier that is connected to at least one shaft that extends concentrically from the planetary gear; driving a carrier cover that is connected to at least one shaft from a set of shafts that extends concentrically from the planetary gear; and driving a main shaft comprising driving a first portion of the main shaft, wherein the first portion of the main shaft is mechanically coupled to the carrier cover, and transferring torque along the main shaft to a second portion of the main shaft, wherein the second portion of the main shaft is mechanically coupled to a propeller assembly.

17. The method of clause D16, further comprising driving a sun gear that is mechanically coupled to the rotor of the electric motor, wherein the electrical motor further comprises a stator.

18. The method of clause D16, wherein the sun gear is hollow.

19. The method of clause D16, wherein the planetary gear includes a compound planetary gear.

20. The method of clause D16, further comprising a ring gear that interfaces with the planetary gear.

21. The method of clause D20, wherein the ring gear is fixed.

22. The method of clause D16, further comprising a cooling system that cools the gearbox with an amount of oil equal to or less than 1 quart.

23. The method of clause D16, further comprising a cooling system that cools the gearbox with an amount of oil equal to or less than 1.5 quarts.

24. The method of clause D16, further comprising a cooling system that cools the gearbox with an amount of oil equal to or less than 2 quarts.

25. The method of clause D16, further comprising a cooling system that cools the gearbox with an amount of oil equal to or less than 2.5 quarts.

26. The method of clause D16, further comprising a cooling system that cools the gearbox with an amount of oil equal to or less than 3 quarts.

27. The method of clause D16, further comprising a cooling system that cools the gearbox with an amount of oil equal to or less than 5 quarts.

28. The method of clause D16, wherein the wherein the gearbox comprises a multi-stage planetary gearset.

29. A vertical take-off and landing (VTOL) aircraft comprising: at least four electrical propulsion systems, each electrical propulsion system comprising: an electrical motor, wherein the electrical motor includes at least a stator and a rotor; a gearbox assembly comprising: a planetary gear mechanically coupled to a rotor of an electric motor; a planetary carrier that is connected to at least one shaft from a set of shafts that extends concentrically from the at least one planetary gear; a main shaft comprising: a first end of the main shaft extending through the planetary carrier, a second end of the main shaft mechanically coupled to a propeller assembly, a length of the main shaft extending the first end of the main shaft through a sun gear and rotor to a second end of the main shaft; and a carrier cover that is connected to the main shaft and is connected to at least one shaft from a set of shafts that extends concentrically from the at least one planetary gear, wherein the electrical motor and gearbox assembly are concentrically aligned along the main shaft.

30. The electric propulsion system of clause D29, wherein a rotation of the carrier cover drives a rotation of the main shaft.

31. The electric propulsion system of clause D29, wherein the sun gear mechanically coupled to the rotor of the electric motor, wherein the electrical motor further comprises a stator.

32. The electric propulsion system of clause D29, wherein the sun gear is hollow.

33. The electric propulsion system of clause D29, further comprising a ring gear that interfaces with the at least one planetary gear.

34. The electric propulsion system of clause D29, wherein the planetary gear comprises a compound planetary gear.

35. The electric propulsion system of clause D29, wherein the gearbox comprises a multi-stage planetary gearset.

36. The electric propulsion system of clause D29, further comprising a cooling system that cools the gearbox with an amount of oil equal to or less than 1 quart.

37. The electric propulsion system of clause D29, further comprising a cooling system that cools the gearbox with an amount of oil equal to or less than 1.5 quarts.

38. The electric propulsion system of clause D29, further comprising a cooling system that cools the gearbox with an amount of oil equal to or less than 2 quarts.

39. The electric propulsion system of clause D29, further comprising a cooling system that cools the gearbox with an amount of oil equal to or less than 2.5 quarts.

40. The electric propulsion system of clause D29, further comprising a cooling system that cools the gearbox with an amount of oil equal to or less than 3 quarts.

41. The electric propulsion system of clause D29, further comprising a cooling system that cools the gearbox with an amount of oil equal to or less than 5 quarts.

42. The electric propulsion system of clause D29, further comprising a gear ratio that is about 6.45.

43. The electric propulsion system of clause D29, wherein the sun gear, the planetary gear, the ring gear, the planetary carrier, and the carrier cover are disposed concentric with the main shaft.

44. The electric propulsion system of clause D29, wherein the electric motor and gearbox assembly are substantially aligned along the main shaft.

45. An electrical propulsion system having a gearbox apparatus that delivers power from an electrical engine via

a reverse torque path comprising the electrical propulsion system of any clauses D1-D15 and D29-D45.

46. A method of delivering power from an electrical engine using a gearbox via a reverse torque path comprising the methods of any clauses D16-D28.

The embodiments disclosed herein are intended to be non-limiting. Those of ordinary skill in the art will appreciate that certain components and configurations of components may be modified without departing from the scope of the disclosed embodiments.

What is claimed is:

1. A method for balancing a rotor of an electric engine, comprising:

identifying an axis of rotation of the rotor;

determining an imbalance present in the rotor by rotating the rotor about the axis of rotation, wherein determining the imbalance includes rotating the rotor and detecting an amplitude of the imbalance;

calculating an amount of mass to remove at a position along an inner circumference of the rotor such that a center of mass of the rotor coincides with the axis of rotation of the rotor; and

removing the amount of mass from the inner circumference of the rotor,

wherein the amount of mass is removed through a machining process.

2. The method of claim **1**, wherein removing the amount of mass from the inner circumference of the rotor comprises:

removing a first mass along a first plane;

removing a second mass along a second plane,

wherein the first plane is spaced apart from the second plane along a central axis of the rotor.

3. The method of claim **1**, wherein the rotor is rotated by a dynamic balancer.

4. The method of claim **1**, wherein the calculating the amount of mass to remove at the position includes determining a magnitude and a phase of the imbalance.

5. The method of claim **1**, wherein the detecting the amplitude of the imbalance includes tracking a marking on the rotor and determining a displacement of the marking on the rotor.

6. The method of claim **5**, wherein the marking on the rotor is a reflective sticker or laser etched mark.

7. The method of claim **1**, wherein determining the imbalance comprises using an electric eye or encoder to track the motion of the rotor and detect the imbalance.

8. The method of claim **1**, further comprising storing information on the imbalance received from an encoder or an accelerometer.

9. The method of claim **1**, wherein the removing the amount of mass is performed using a machine with a milling resolution that is less than or equal to five microns.

10. The method of claim **1**, wherein the rotor is rotated at a speed less than an operating speed of the rotor.

11. The method of claim **1**, wherein the rotor is rotated at a speed less than a first resonance of the rotor.

12. The method of claim **1**, wherein the removed mass is integral to the rotor.

13. The method of claim **1**, wherein the rotor and the removed mass are aluminum.

14. The method of claim **1**, wherein the rotor and the removed mass are steel.

15. The method of **1**, wherein an initial size of the rotor is determined to accommodate the removing the amount of mass from the inner circumference; and

wherein the initial size of the rotor is determined in consideration of manufacturing constraints of the rotor.

16. The method of claim **1**, wherein the rotor comprises a plurality of discrete sections on the inner circumference of the rotor; and

wherein the removing the amount of mass from the inner circumference of the rotor comprises removing the amount of mass from the plurality of discrete sections.

17. The method of claim **1**, wherein the calculating an amount of mass to remove further comprises calculating a minimum mass of the rotor such that the center of mass of the rotor coincides with the axis of rotation of the rotor.

18. A method for balancing a rotor of an electric engine, comprising:

identifying an axis of rotation of the rotor;

determining an imbalance present in the rotor by rotating the rotor about the axis of rotation, wherein determining the imbalance includes rotating the rotor and detecting an amplitude of the imbalance;

calculating an amount of mass to remove at a position along an inner circumference of the rotor such that a center of mass of the rotor coincides with the axis of rotation of the rotor; and

removing the amount of mass from the inner circumference of the rotor, wherein removing the amount of mass from the inner circumference of the rotor comprises:

removing a first mass along a first plane;

removing a second mass along a second plane,

wherein the first plane is spaced apart from the second plane along a central axis of the rotor.

19. The method of claim **18**, wherein the rotor is rotated by a dynamic balancer.

20. The method of claim **18**, wherein the calculating the amount of mass to remove at the position includes determining a magnitude and a phase of the imbalance.

21. The method of claim **18**, wherein the detecting the amplitude of the imbalance includes tracking a marking on the rotor and determining a displacement of the marking on the rotor.

22. The method of claim **20**, wherein the marking on the rotor is a reflective sticker or laser etched mark.

23. The method of claim **18**, wherein determining the imbalance comprises using an electric eye or encoder to track the motion of the rotor and detect the imbalance.

24. The method of claim **18**, further comprising storing information on the imbalance received from an encoder or an accelerometer.

25. The method of claim **18**, wherein the removing the amount of mass is performed through a machining process using a machine with a milling resolution that is less than or equal to five microns.

26. The method of claim **18**, wherein the rotor is rotated at a speed less than an operating speed of the rotor.

27. The method of claim **18**, wherein the removed mass is integral to the rotor.

28. The method of claim **18**, wherein the rotor and the removed mass are aluminum.

29. The method of claim **18**, wherein the rotor and the removed mass are steel.

30. The method of claim **18**, wherein the calculating an amount of mass to remove further comprises calculating a minimum mass of the rotor such that the center of mass of the rotor coincides with the axis of rotation of the rotor.

* * * * *