US012388276B1

(12) **United States Patent**
Thiel et al.

(10) **Patent No.: US 12,388,276 B1**
(45) **Date of Patent: *Aug. 12, 2025**

(54) **PORTABLE POWER CASE WITH HEAT-RESISTANT MATERIAL**

(71) Applicant: **LAT Enterprises, Inc.**, Raleigh, NC (US)

(72) Inventors: **Laura Thiel**, Raleigh, NC (US); **Giancarlo Urzi**, Raleigh, NC (US); **Carlos Cid**, Raleigh, NC (US)

(73) Assignee: **LAT Enterprises, Inc.**, Raleigh, NC (US)

(*) Notice: Subject to any disclaimer, the term of this patent is extended or adjusted under 35 U.S.C. 154(b) by 0 days.

This patent is subject to a terminal disclaimer.

(21) Appl. No.: **19/196,212**

(22) Filed: **May 1, 2025**

Related U.S. Application Data

(63) Continuation of application No. 18/975,739, filed on Dec. 10, 2024, now Pat. No. 12,294,231, which is a

(Continued)

(51) **Int. Cl.**
H02J 7/00 (2006.01)
A41D 1/00 (2018.01)

(Continued)

(52) **U.S. Cl.**
CPC ***H02J 7/0042*** (2013.01); ***A41D 1/005*** (2013.01); ***A41D 27/205*** (2013.01); ***A45C 3/001*** (2013.01);

(Continued)

(58) **Field of Classification Search**
CPC H02J 7/0042; H02J 7/0031; H02J 7/0068; H02J 1/082; H02J 7/00; H02J 7/35;

(Continued)

(56) **References Cited**

U.S. PATENT DOCUMENTS

1,901,232 A 3/1933 Glowacki
RE21,577 E 9/1940 Brownlee

(Continued)

FOREIGN PATENT DOCUMENTS

CN 202474897 U 10/2012
CN 202931205 U 5/2013

(Continued)

OTHER PUBLICATIONS

CaSZLUTION Bag. Amazon. https://www.amazon.com/dp/B0DJ8TV2VX.%20Accessed%2021%20Nov.%202024. Accessed Nov. 21, 2024.

(Continued)

Primary Examiner — Adam A Arciero
(74) *Attorney, Agent, or Firm* — NEO IP

(57) **ABSTRACT**

Systems, methods, and articles for a portable power case are disclosed. The portable power case is comprised of at least one battery and at least one PCB. The portable power case has at least two access ports, at least two leads, or at least one access port and at least one lead and at least one USB port. The portable power case is operable to supply power to an amplifier, a radio, a wearable battery, a mobile phone, and a tablet. The portable power case is operable to be charged using solar panels, vehicle batteries, AC adapters, non-rechargeable batteries, and generators. The portable power case provides for modularity that allows the user to disassemble and selectively remove the batteries installed within the portable power case housing.

20 Claims, 49 Drawing Sheets

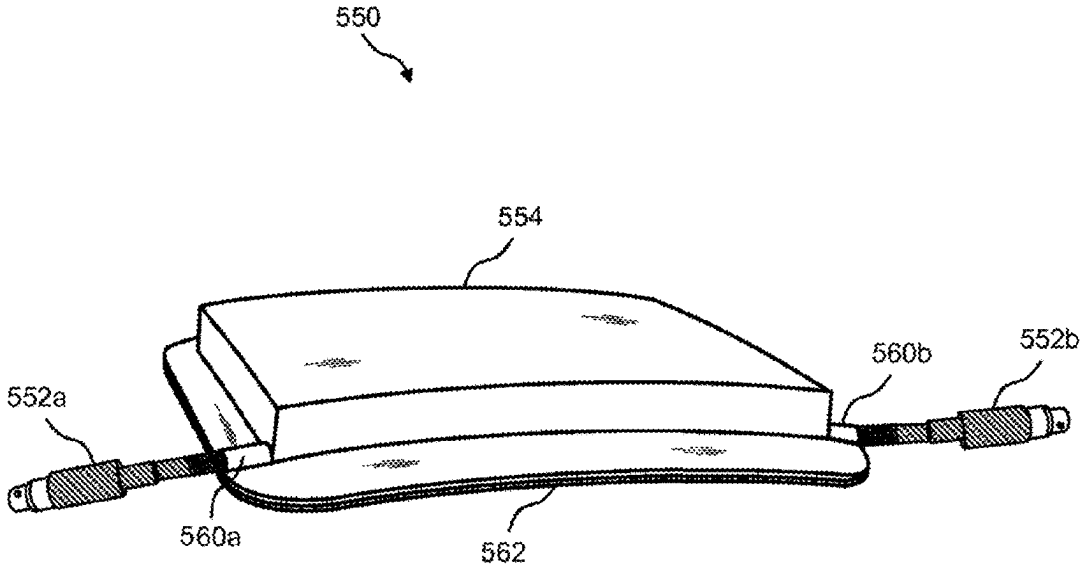

Related U.S. Application Data

continuation of application No. 18/625,744, filed on Apr. 3, 2024, now Pat. No. 12,191,690, which is a continuation of application No. 17/331,155, filed on May 26, 2021, now Pat. No. 11,955,824, which is a continuation of application No. 15/836,299, filed on Dec. 8, 2017, now Pat. No. 11,025,075, which is a continuation-in-part of application No. 15/720,270, filed on Sep. 29, 2017, now Pat. No. 10,461,289, which is a continuation-in-part of application No. 15/664,776, filed on Jul. 31, 2017, now Pat. No. 11,462,649, which is a continuation-in-part of application No. 15/470,382, filed on Mar. 27, 2017, now Pat. No. 11,302,987, which is a continuation-in-part of application No. 14/516,127, filed on Oct. 16, 2014, now abandoned, said application No. 15/720,270 is a continuation-in-part of application No. 14/520,821, filed on Oct. 22, 2014, now Pat. No. 9,780,344, said application No. 15/836,299 is a continuation-in-part of application No. 15/664,776, filed on Jul. 31, 2017, now Pat. No. 11,462,649.

(51) **Int. Cl.**

A41D 27/20	(2006.01)
A45C 3/00	(2006.01)
A45C 5/03	(2006.01)
A45C 11/00	(2006.01)
A45C 13/08	(2006.01)
A45C 13/10	(2006.01)
A45C 13/30	(2006.01)
A45C 13/36	(2006.01)
A45C 15/00	(2006.01)
H01M 10/42	(2006.01)
H01M 10/48	(2006.01)
H01M 50/202	(2021.01)
H01M 50/24	(2021.01)
H01M 50/284	(2021.01)
H01M 50/296	(2021.01)
H01R 13/52	(2006.01)
H01R 24/64	(2011.01)
H01R 107/00	(2006.01)
A45F 5/02	(2006.01)
H02J 1/08	(2006.01)
H02J 7/35	(2006.01)

(52) **U.S. Cl.**

CPC ***A45C 11/00*** (2013.01); ***A45C 13/08*** (2013.01); ***A45C 13/10*** (2013.01); ***A45C 13/36*** (2013.01); ***A45C 15/00*** (2013.01); ***H01M 10/425*** (2013.01); ***H01M 10/488*** (2013.01); ***H01M 50/202*** (2021.01); ***H01M 50/24*** (2021.01); ***H01M 50/284*** (2021.01); ***H01M 50/296*** (2021.01); ***H01R 13/5213*** (2013.01); ***H02J 7/0031*** (2013.01); ***H02J 7/0068*** (2013.01); *A45C 2005/037* (2013.01); *A45C 2013/306* (2013.01); *A45F 5/02* (2013.01); *A45F 2005/023* (2013.01); *H01M 2010/4271* (2013.01); *H01M 2010/4278* (2013.01); *H01M 2220/30* (2013.01); *H01R 24/64* (2013.01); *H01R 2107/00* (2013.01); *H02J 1/082* (2020.01); *H02J 7/00* (2013.01); *H02J 7/35* (2013.01); *H02J 2207/40* (2020.01)

(58) **Field of Classification Search**

CPC ... H02J 2207/40; A41D 1/005; A41D 27/205; A45C 3/001; A45C 11/00; A45C 13/08; A45C 13/10; A45C 13/36; A45C 15/00; A45C 2005/037; A45C 2013/306; H01M 10/425; H01M 50/202; H01M 50/24; H01M 50/284; H01M 50/296; H01M 2010/4271; H01M 2010/4278; H01M 2220/30; H01R 13/5213; H01R 24/64; H01R 2107/00; A45F 5/02; A45F 2005/023

See application file for complete search history.

(56) **References Cited**

U.S. PATENT DOCUMENTS

2,416,984	A	3/1947	Farr	
2,450,369	A	9/1948	Alexander	
2,501,725	A	3/1950	Knopp	
2,800,807	A	7/1957	Gomersall et al.	
3,926,499	A	12/1975	Bailey et al.	
3,952,694	A	4/1976	McDonald	
3,968,348	A	7/1976	Stanfield	
4,080,677	A	3/1978	Koehler	
4,081,061	A	3/1978	Tucker	
4,303,083	A	12/1981	Burruss, Jr.	
4,346,151	A	8/1982	Uba et al.	
4,656,770	A	4/1987	Nuttle	
4,872,414	A	10/1989	Asquith	
4,944,916	A	7/1990	Franey	
4,979,502	A	12/1990	Hunt	
5,185,042	A	2/1993	Ferguson	
5,245,943	A	9/1993	Hull et al.	
5,326,297	A	7/1994	Loughlin	
5,340,662	A	8/1994	Mccarter	
5,421,287	A	6/1995	Yonover	
5,522,943	A	6/1996	Spencer et al.	
5,537,022	A	7/1996	Huang	
5,610,496	A	3/1997	Hofbauer et al.	
5,653,367	A	8/1997	Abramson	
5,680,026	A	10/1997	Lueschen	
5,701,067	A	12/1997	Kaji et al.	
5,724,707	A	3/1998	Kirk et al.	
5,736,954	A	4/1998	Veazey	
5,808,865	A	9/1998	Alves	
5,853,915	A	12/1998	Suto	
5,861,223	A	1/1999	Motlagh	
5,869,204	A	2/1999	Kottke et al.	
6,093,884	A	7/2000	Toyomura et al.	
6,115,277	A	9/2000	Plichta et al.	
6,172,892	B1 *	1/2001	Plichta	B60L 58/14 320/136
6,193,678	B1	2/2001	Brannon	
6,239,701	B1	5/2001	Vasquez et al.	
6,259,228	B1	7/2001	Becker et al.	
6,281,594	B1	8/2001	Sarich	
6,303,248	B1	10/2001	Peterson	
6,313,396	B1	11/2001	Glenn	
6,351,908	B1	3/2002	Thomas	
6,380,713	B2	4/2002	Namura	
6,396,403	B1	5/2002	Haner	
6,415,734	B1	7/2002	LaPuzza	
6,477,035	B1	11/2002	Cepas et al.	
6,546,873	B1	4/2003	Andrejkovics et al.	
6,641,432	B1	11/2003	Ouyoung	
6,659,320	B1	12/2003	Alves et al.	
6,727,197	B1	4/2004	Wilson et al.	
6,784,833	B1	8/2004	Evans	
6,866,527	B2	3/2005	Potega	
6,870,089	B1	3/2005	Gray	
6,945,803	B2	9/2005	Potega	
7,074,520	B2	7/2006	Probst et al.	
7,124,593	B2	10/2006	Feher	
7,141,330	B2	11/2006	Aoyama	
7,221,552	B1	5/2007	Brown	
7,356,934	B2	4/2008	McCambridge et al.	
7,443,627	B1	10/2008	Krishnamoorthy et al.	
7,489,105	B2	2/2009	Weinstein et al.	
7,494,348	B1	2/2009	Tyler et al.	
7,611,255	B1	11/2009	Lagassey	

(56) **References Cited**

U.S. PATENT DOCUMENTS

7,624,453 B2 12/2009 Rene et al.
7,695,334 B2 4/2010 Yonover et al.
7,697,269 B2 4/2010 Yang et al.
7,712,645 B2 5/2010 Calkin
7,769,465 B2 8/2010 Matos
7,798,090 B2 9/2010 Hatfield
7,805,114 B1 9/2010 Quintana et al.
7,878,678 B1 2/2011 Stamatatos et al.
7,931,178 B2 4/2011 Rome et al.
8,258,394 B2 9/2012 Baruh
8,415,924 B2 4/2013 Matthias et al.
8,587,261 B2 11/2013 Sassen et al.
8,633,619 B2 1/2014 Robinson et al.
8,638,011 B2 1/2014 Robinson et al.
8,647,777 B2 2/2014 Yasunaga et al.
8,720,762 B2 5/2014 Hilliard et al.
8,736,108 B1 5/2014 Nielson et al.
8,775,846 B2 7/2014 Robinson et al.
8,832,981 B2 9/2014 Desaulniers
8,945,328 B2 2/2015 Longinotti-Buitoni et al.
8,984,666 B1 3/2015 Lobue
9,029,681 B1 5/2015 Nielson et al.
9,057,361 B2 6/2015 Donelan et al.
9,093,586 B2 7/2015 Lentine et al.
9,138,022 B2 9/2015 Walker
9,141,143 B2 9/2015 Morita
9,143,053 B1 9/2015 Lentine et al.
9,144,255 B1 9/2015 Perciballi
9,160,022 B2 10/2015 Pruett et al.
9,230,486 B2 1/2016 Klement et al.
9,335,811 B2 5/2016 Long et al.
9,496,448 B2 11/2016 Cruz-Campa et al.
9,508,881 B2 11/2016 Tauke-Pedretti et al.
9,531,322 B2 12/2016 Okandan et al.
9,548,411 B2 1/2017 Nielson et al.
9,559,219 B1 1/2017 Okandan et al.
9,634,485 B2 4/2017 Long et al.
9,634,491 B2 4/2017 Robinson et al.
9,640,965 B1 5/2017 Long et al.
9,653,632 B1 5/2017 Beitman, Sr.
9,680,318 B2 6/2017 Carkner et al.
9,709,362 B2 7/2017 Shelley
9,780,344 B2 * 10/2017 Thiel H01M 50/548
10,250,134 B2 4/2019 Long et al.
10,281,240 B2 5/2019 Cole et al.
10,326,284 B2 6/2019 Long et al.
10,333,315 B2 6/2019 Robinson et al.
10,361,629 B2 7/2019 Long et al.
10,531,590 B2 1/2020 Thiel et al.
10,587,116 B2 3/2020 Long et al.
10,594,142 B2 3/2020 Long et al.
10,616,534 B2 4/2020 Thiel et al.
10,848,067 B2 11/2020 Long et al.
10,862,320 B2 12/2020 Carkner et al.
10,951,865 B2 3/2021 Thiel et al.
11,025,075 B2 * 6/2021 Thiel A45C 11/00
11,108,230 B2 8/2021 Long et al.
11,258,366 B2 2/2022 Long et al.
11,283,265 B2 3/2022 Robinson et al.
11,355,928 B2 6/2022 Long et al.
11,477,853 B2 10/2022 Gray et al.
11,569,667 B2 1/2023 Robinson et al.
11,800,067 B2 10/2023 Thiel et al.
11,876,354 B2 1/2024 Thiel et al.
12,068,600 B2 8/2024 Long et al.
12,088,244 B2 9/2024 Thiel et al.
12,114,747 B2 10/2024 Thiel et al.
2002/0074370 A1 6/2002 Quintana et al.
2002/0178558 A1 12/2002 Doshi et al.
2003/0029494 A1 2/2003 Ohkubo
2003/0038611 A1 2/2003 Morgan
2003/0098060 A1 5/2003 Yoshimi
2003/0165744 A1 9/2003 Schubert et al.
2004/0144580 A1 7/2004 Wu
2004/0154076 A1 8/2004 Yoo
2004/0237178 A1 12/2004 Landeros
2005/0140331 A1 6/2005 McQuade
2005/0151930 A1 7/2005 Harris
2005/0161079 A1 7/2005 Gray
2005/0210722 A1 9/2005 Graef et al.
2006/0028166 A1 2/2006 Closset et al.
2006/0147172 A1 7/2006 Luther et al.
2006/0225781 A1 10/2006 Locher
2006/0267547 A1 11/2006 Godovich
2007/0030146 A1 2/2007 Shepherd
2007/0061941 A1 3/2007 Makabe et al.
2007/0099488 A1 5/2007 Huffman et al.
2007/0125815 A1 6/2007 Tong
2007/0222410 A1 9/2007 Lee
2007/0245444 A1 10/2007 Brink
2007/0295772 A1 12/2007 Woodmansee
2007/0299473 A1 12/2007 Matos
2008/0052439 A1 2/2008 Young et al.
2008/0190476 A1 8/2008 Baruh
2008/0223428 A1 9/2008 Zeira
2008/0223431 A1 9/2008 Chu
2008/0231225 A1 9/2008 Lin
2009/0004909 A1 1/2009 Puzio et al.
2009/0039122 A1 2/2009 Antonioni
2009/0044852 A1 2/2009 Shadbolt et al.
2009/0114690 A1 5/2009 Landay
2009/0131165 A1 5/2009 Buchner et al.
2009/0164174 A1 6/2009 Bears et al.
2009/0229655 A1 9/2009 Lee
2009/0269943 A1 10/2009 Palli et al.
2009/0272773 A1 11/2009 Andrade
2009/0279810 A1 11/2009 Nobles
2010/0008028 A1 * 1/2010 Richardson G06F 1/1628
361/679.01
2010/0147604 A1 6/2010 Sakita
2010/0213309 A1 8/2010 Parks
2010/0253501 A1 10/2010 Gibson
2010/0287681 A1 11/2010 Storms, Jr. et al.
2010/0300744 A1 12/2010 Romanko et al.
2011/0049992 A1 3/2011 Sant'Anselmo et al.
2011/0059642 A1 3/2011 Slippy et al.
2011/0064983 A1 3/2011 Yokoyama et al.
2011/0070472 A1 3/2011 Cui et al.
2011/0097069 A1 4/2011 Braithwaite
2011/0100425 A1 5/2011 Osamura et al.
2011/0101794 A1 5/2011 Schroeder et al.
2011/0162690 A1 7/2011 Workman et al.
2011/0173731 A1 7/2011 McElroy et al.
2011/0183183 A1 7/2011 Grady et al.
2011/0204114 A1 8/2011 Miller
2011/0277809 A1 11/2011 Dalland et al.
2011/0278338 A1 11/2011 Darnell, II et al.
2011/0290683 A1 12/2011 High et al.
2011/0291607 A1 12/2011 Rossi et al.
2012/0025766 A1 * 2/2012 Reade G06F 11/327
320/110
2012/0043937 A1 2/2012 Williams
2012/0045929 A1 2/2012 Streeter et al.
2012/0060261 A1 3/2012 Raviv
2012/0090659 A1 4/2012 Muchow et al.
2012/0094166 A1 4/2012 Lee et al.
2012/0100414 A1 4/2012 Sonta
2012/0114990 A1 5/2012 Jeong et al.
2012/0156911 A1 6/2012 Smith
2012/0186000 A1 7/2012 Raviv
2012/0214042 A1 8/2012 Wiegert
2012/0227792 A1 9/2012 Chen et al.
2012/0235477 A1 9/2012 Korman
2012/0240999 A1 9/2012 Yoshida et al.
2012/0289081 A1 11/2012 Izzard
2013/0034765 A1 2/2013 Kowalski
2013/0043827 A1 2/2013 Weinstein et al.
2013/0049991 A1 2/2013 Mothaffar
2013/0084473 A1 4/2013 Wahlquist et al.
2013/0089756 A1 4/2013 Kwag
2013/0164567 A1 6/2013 Olsson et al.
2013/0181666 A1 7/2013 Matthias et al.
2013/0183562 A1 7/2013 Workman
2013/0263922 A1 10/2013 Jung et al.

(56) **References Cited**

U.S. PATENT DOCUMENTS

2013/0294712	A1	11/2013	Seuk
2013/0305528	A1	11/2013	Anderson
2014/0061273	A1	3/2014	Bullivant et al.
2014/0062381	A1	3/2014	Teggatz et al.
2014/0072864	A1	3/2014	Suzuta et al.
2014/0082814	A1	3/2014	Rober et al.
2014/0095915	A1	4/2014	Hitchcock et al.
2014/0101831	A1	4/2014	Balzano
2014/0142507	A1	5/2014	Armes
2014/0206976	A1	7/2014	Thompson et al.
2014/0210399	A1	7/2014	Urschel et al.
2014/0226920	A1	8/2014	Passavia
2014/0361726	A1	12/2014	Carkner
2015/0060430	A1	3/2015	Tsuge et al.
2015/0086868	A1	3/2015	Inoue et al.
2015/0114444	A1	4/2015	Lentine et al.
2015/0114451	A1	4/2015	Anderson et al.
2015/0118543	A1	4/2015	Kim et al.
2015/0128845	A1	5/2015	Desaulniers
2015/0132622	A1	5/2015	Gohl et al.
2015/0200318	A1	7/2015	Thiel
2015/0216245	A1	8/2015	Kinsley
2015/0216274	A1	8/2015	Akin et al.
2015/0263377	A1	9/2015	Brooks et al.
2015/0295617	A1	10/2015	Lai et al.
2016/0026423	A1	1/2016	Zenoff
2016/0112004	A1	4/2016	Thiel et al.
2016/0118634	A1	4/2016	Thiel et al.
2016/0183394	A1	6/2016	Raschilla et al.
2016/0360146	A1	12/2016	Smith
2017/0045337	A1	2/2017	Kim
2017/0050259	A1	2/2017	Schraff et al.
2017/0110896	A1	4/2017	Gissin et al.
2017/0214103	A1	7/2017	Onnerud et al.
2017/0229692	A1	8/2017	Thiel et al.
2017/0245567	A1	8/2017	Fathollahi et al.
2017/0259956	A1	9/2017	Hori et al.
2017/0263902	A1	9/2017	Hwang et al.
2017/0264116	A1	9/2017	Carkner et al.
2017/0264237	A1	9/2017	La Due
2017/0280797	A1	10/2017	Bayliss
2018/0040910	A1	2/2018	Chung et al.
2018/0053919	A1	2/2018	Thiel et al.
2018/0062197	A1	3/2018	Thiel et al.
2018/0102518	A1	4/2018	Thiel et al.
2018/0102656	A1	4/2018	Thiel et al.
2018/0145445	A1	5/2018	Louis et al.
2018/0168065	A1	6/2018	Thiel et al.
2018/0249133	A1	8/2018	Thiel et al.
2018/0258882	A1	9/2018	Thiel et al.
2018/0309307	A1	10/2018	Carkner
2019/0081493	A1	3/2019	Thiel et al.
2019/0109349	A1	4/2019	Thiel et al.
2019/0133303	A1	5/2019	Thiel et al.
2020/0099023	A1	3/2020	Thiel et al.
2020/0112189	A1	4/2020	McLean
2020/0187379	A1	6/2020	Thiel et al.
2020/0288089	A1	9/2020	Thiel et al.
2020/0313610	A1	10/2020	Thiel et al.
2020/0343493	A1	10/2020	Thiel et al.
2021/0005850	A1	1/2021	Thiel et al.
2021/0280933	A1	9/2021	Thiel et al.
2021/0289174	A1	9/2021	Thiel et al.
2021/0296925	A1	9/2021	Long et al.
2021/0313629	A1	10/2021	Thiel et al.
2022/0052536	A1	2/2022	Thiel et al.
2022/0231369	A1	7/2022	Thiel et al.
2022/0240654	A1	8/2022	Thiel et al.
2022/0285936	A1	9/2022	Long et al.
2023/0034714	A1	2/2023	Thiel et al.
2023/0208114	A1	6/2023	Thiel et al.
2023/0367284	A1	11/2023	Moore et al.
2023/0370414	A1	11/2023	Moore et al.
2023/0412119	A1	12/2023	Thiel et al.
2024/0113656	A1	4/2024	Thiel et al.
2024/0115020	A1	4/2024	Thiel et al.
2024/0128526	A1	4/2024	Thiel et al.
2024/0145836	A1	5/2024	Thiel et al.
2024/0146037	A1	5/2024	Thiel et al.
2024/0250509	A1	7/2024	Thiel et al.
2024/0250541	A1	7/2024	Thiel et al.
2024/0266851	A1	8/2024	Thiel et al.
2024/0285062	A1	8/2024	Thiel et al.
2024/0297615	A1	9/2024	Thiel et al.
2025/0022968	A1	1/2025	Thiel et al.
2025/0105641	A1	3/2025	Thiel et al.

FOREIGN PATENT DOCUMENTS

CN	203435168	U	2/2014
CN	205452304	U	8/2016
DE	102011054322	A1	4/2012
DE	202012104339	U1	2/2014
GB	2518669	A	4/2015
GB	2553537	A	3/2018
JP	2002325339	A	11/2002
JP	2003174179	A	6/2003
JP	2004103248	A	4/2004
JP	2014003846	A	1/2014
KR	101145898	B1	5/2012
KR	101159750	B1	6/2012
KR	101294972	B1	8/2013
WO	2013106474	A1	7/2013
WO	2015181673	A1	12/2015
WO	2016061508	A1	4/2016
WO	2017040724	A1	3/2017

OTHER PUBLICATIONS

DE 202012104339 Machine English translation (Year: 2014).

EE-Dan; Repair Your Laptop Power Cord; Instructables.com; published Jun. 11, 2013; https://www.instructables.com/Repair-Your-Laptop-Power-Cord/ (Year: 2013).

Electropaedia; Battery and Energy Technologies; printout from Jul. 2, 2012; pp. 1-5 (Year: 2012).

Epsilor; ELI-0414 Rechargeable Li-ion Military Battery; accessed and printed Apr. 21, 2020 (Year: 2020).

Machine translation of CN202931205U, Liu et al., 2013 (Year: 2013).

Machine translation of JP 2002-325339A, Okada Tadao, 2002 (Year: 2002).

Machine translation of JP 2004-103248; accessed and printed Aug. 7, 2021 (Year: 2004).

Satgear. https://satgear.com/products/starlink-gen-3-4-bag-backpack. Accessed Nov. 21, 2024.

Starlink Mini Specifications https://www.starlink.com/specifications?spec=5 Accessed Nov. 22, 2024.

Starlink Roam. https://www.starlink.com/roam Accessed Nov. 21, 2024.

Translation of CN205452304 (Year: 2016).

Westover, Brian and Kan, Michael. SpaceX Selling $199 Backpack for Its Portable V4 Starlink Dish. PC Magazine, Nov. 12, 2024, https://www.pcmag.com/news/spacex-selling-199-backpack-for-its-portable-v4-starlink-dish. Accessed Nov. 21, 2024.

Yunhuan Group; 3 prong Australia AC power cord; archived Jul. 1, 2016; https://web.archive.org/web/20160701194647/http://www.yunhuanelectric.com/Australia-AC-Power-Cord-03.html (Year: 2016).

* cited by examiner

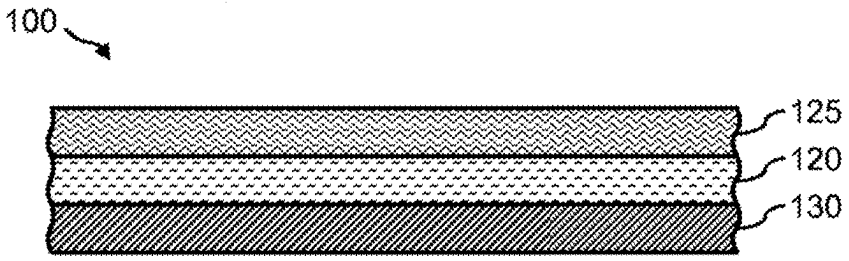

FIG. 1A

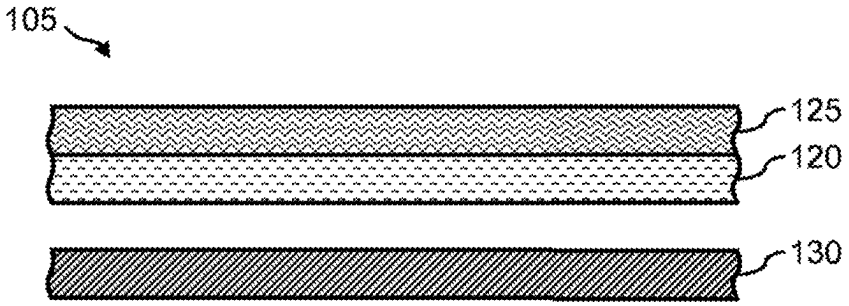

FIG. 1B

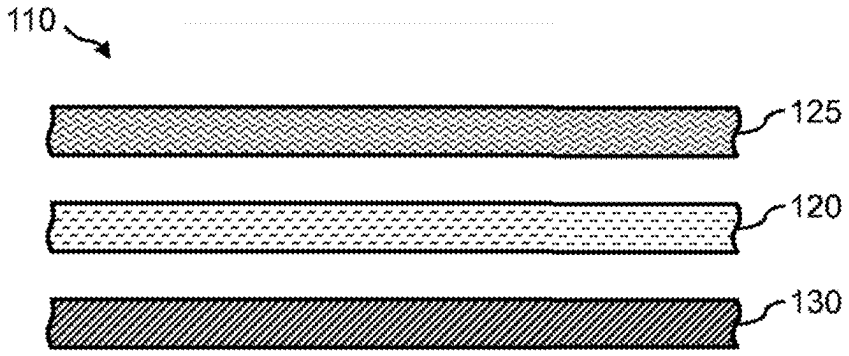

FIG. 1C

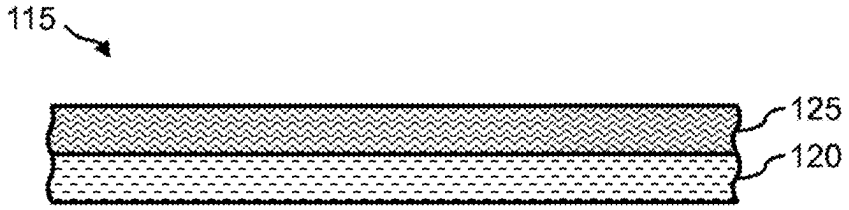

FIG. 1D

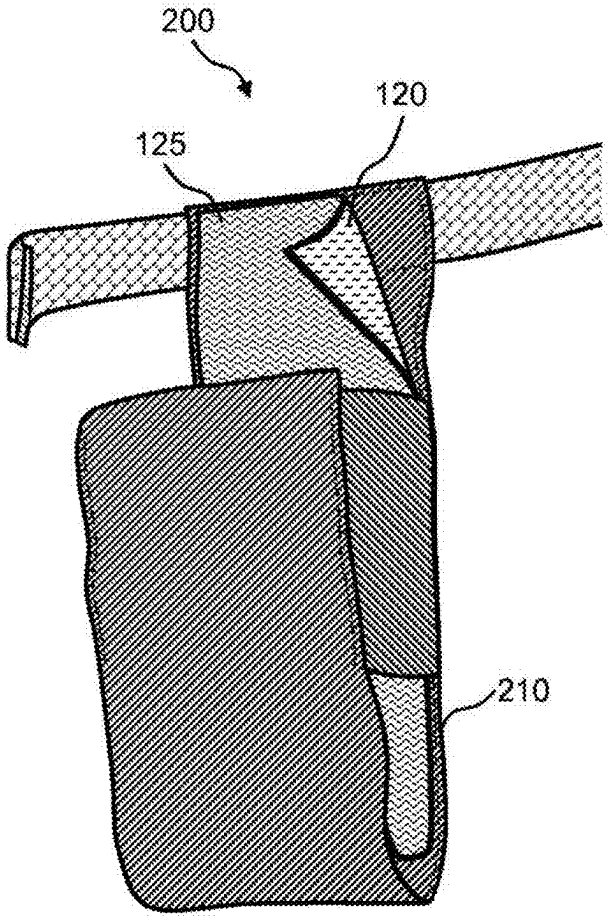

FIG. 2A

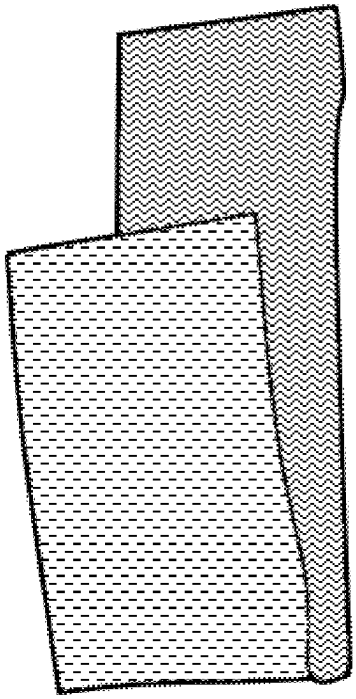

FIG. 2B

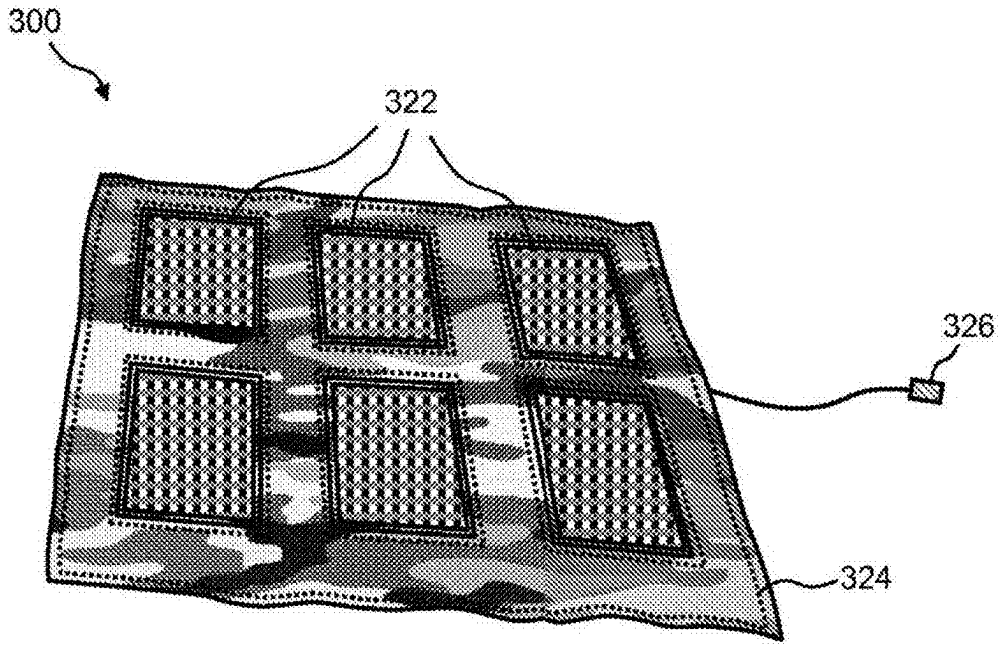

FIG. 3

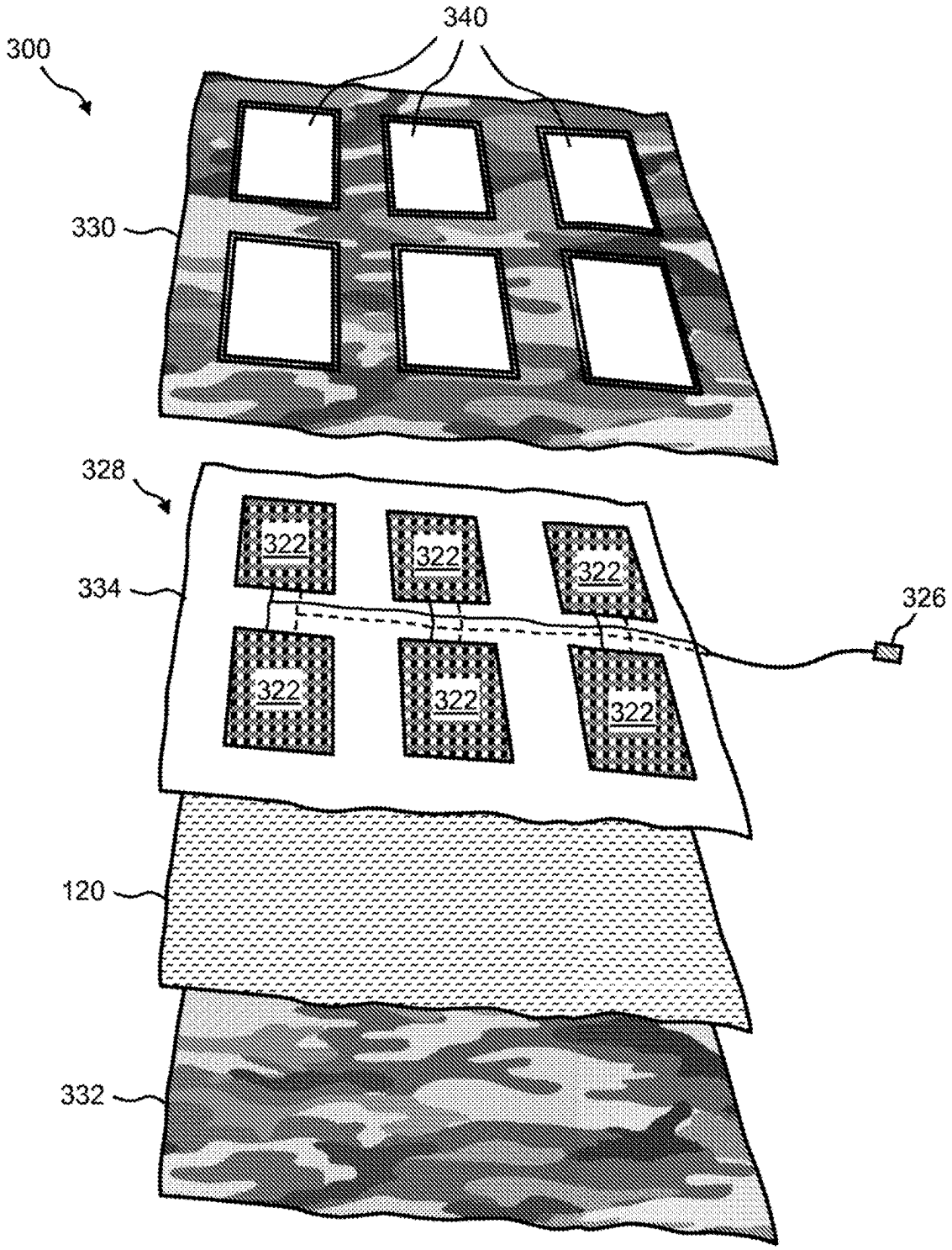

FIG. 4

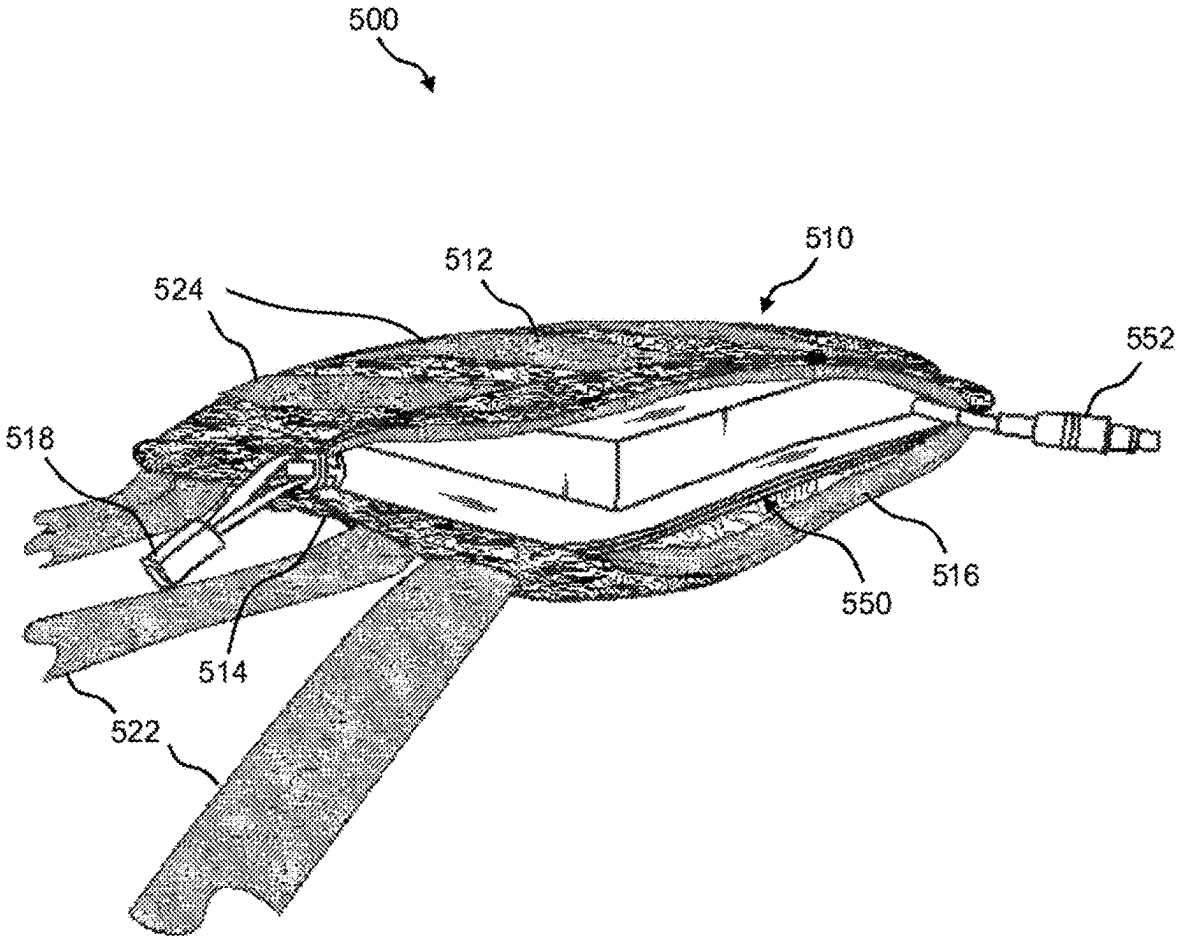

FIG. 5

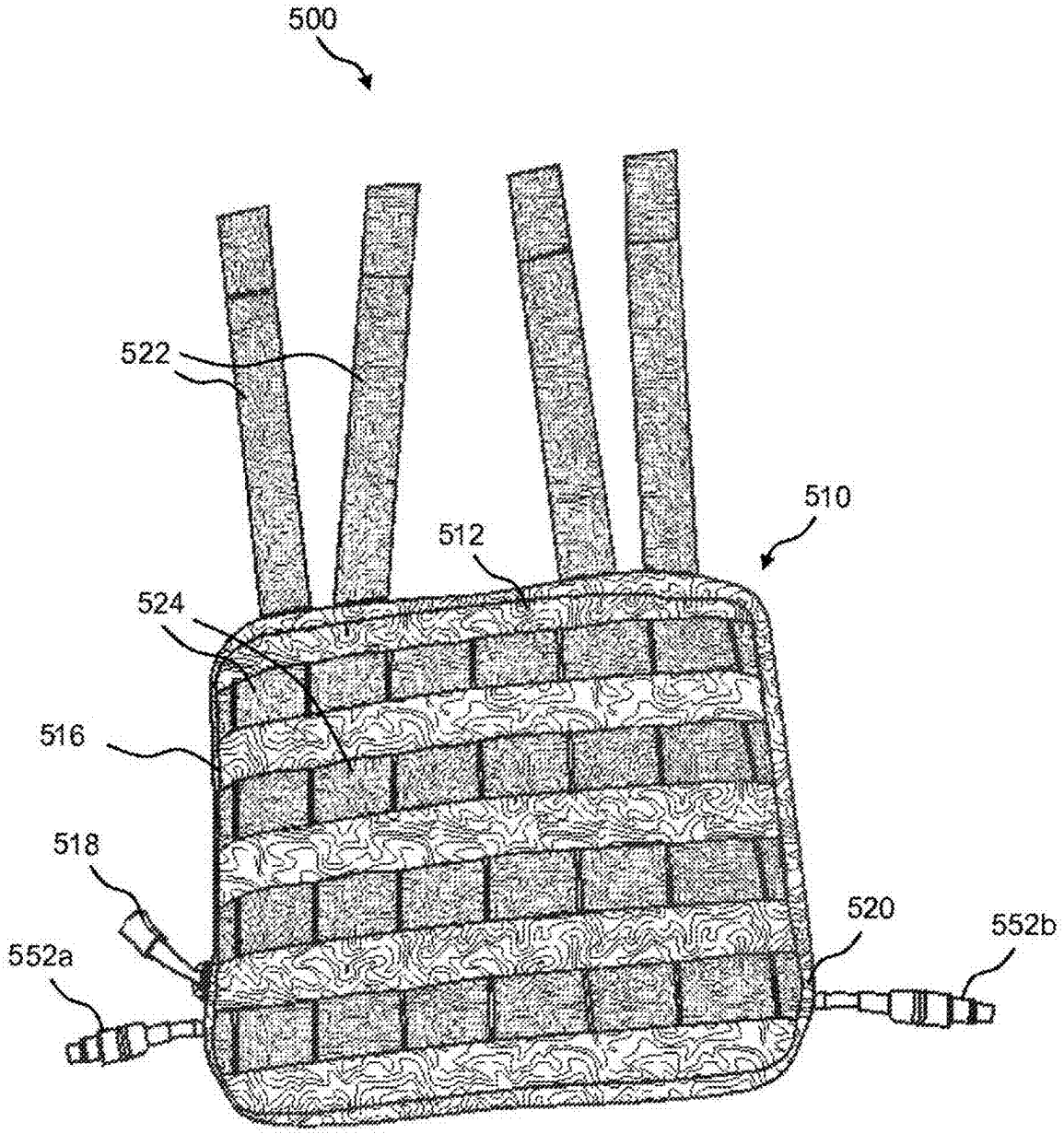

FIG. 6

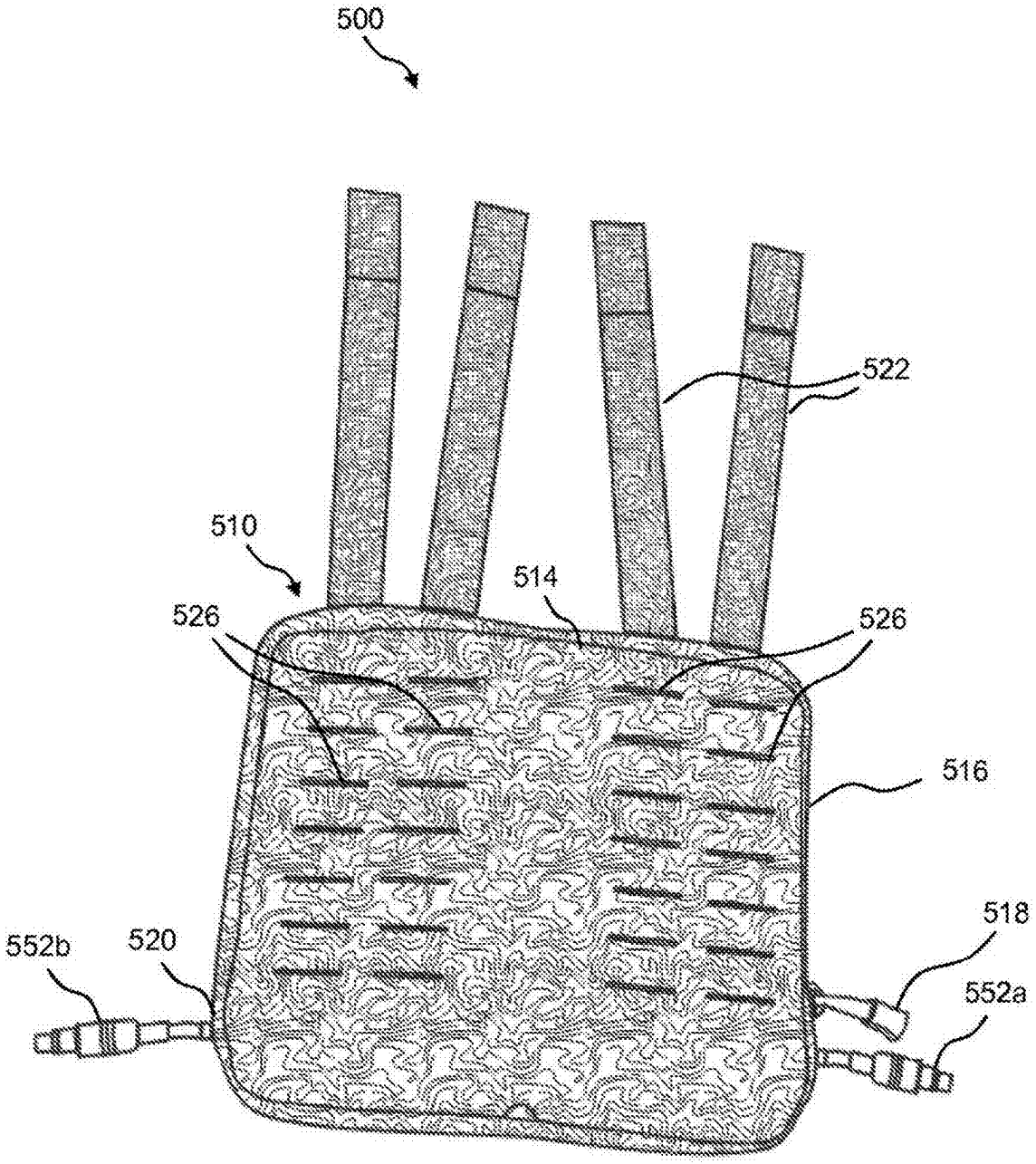

FIG. 7

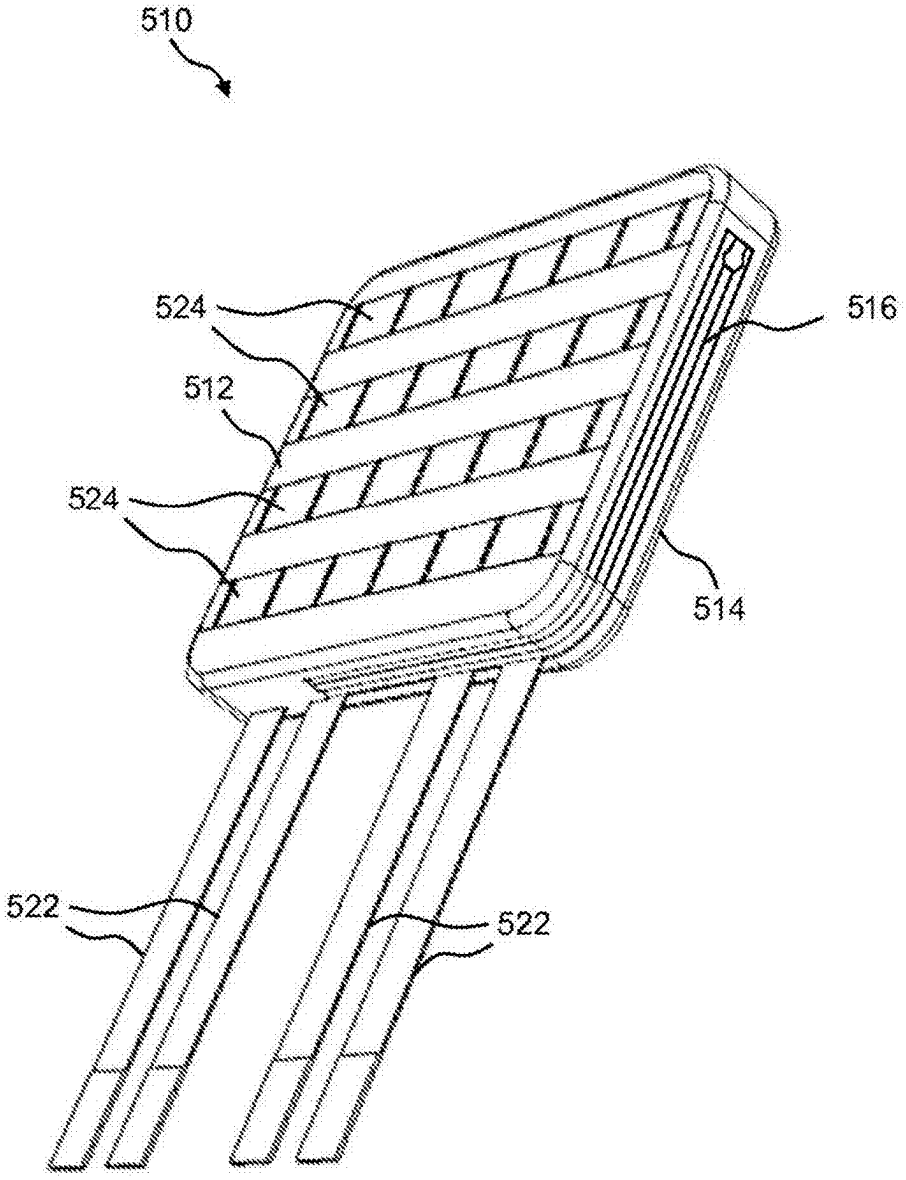

FIG. 8

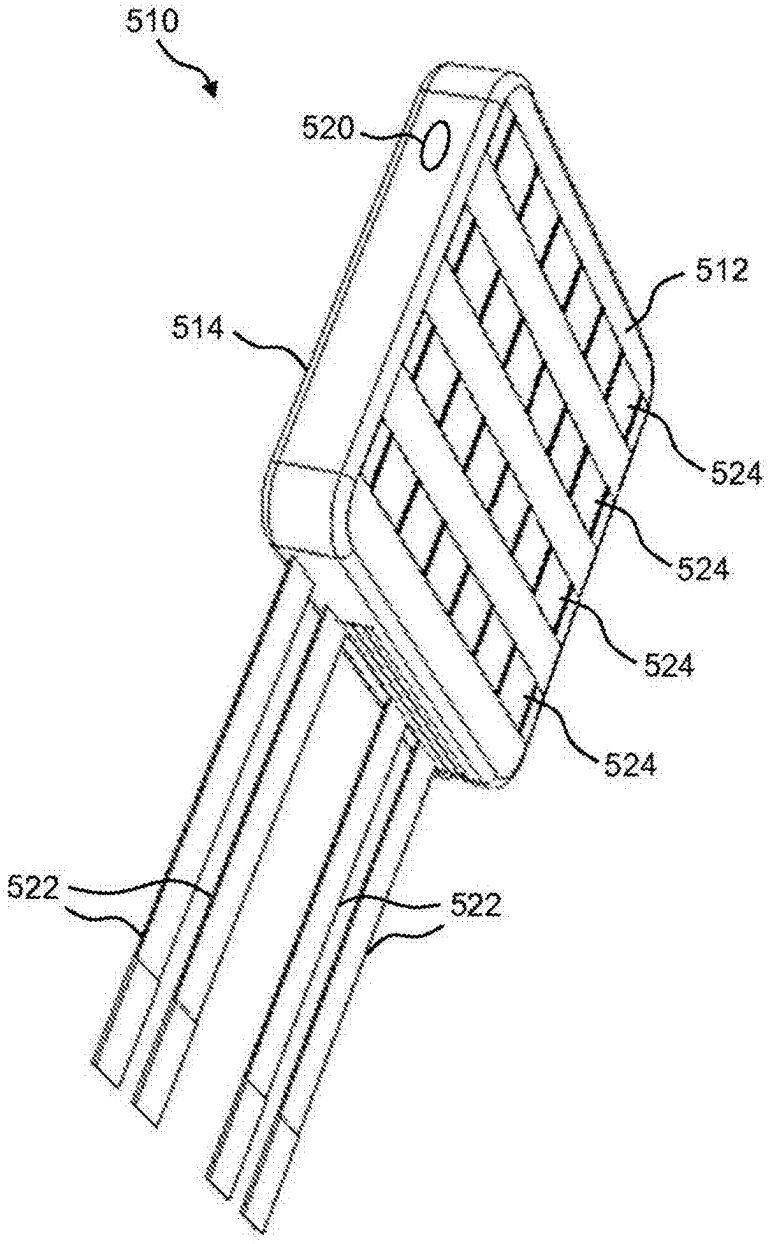

FIG. 9

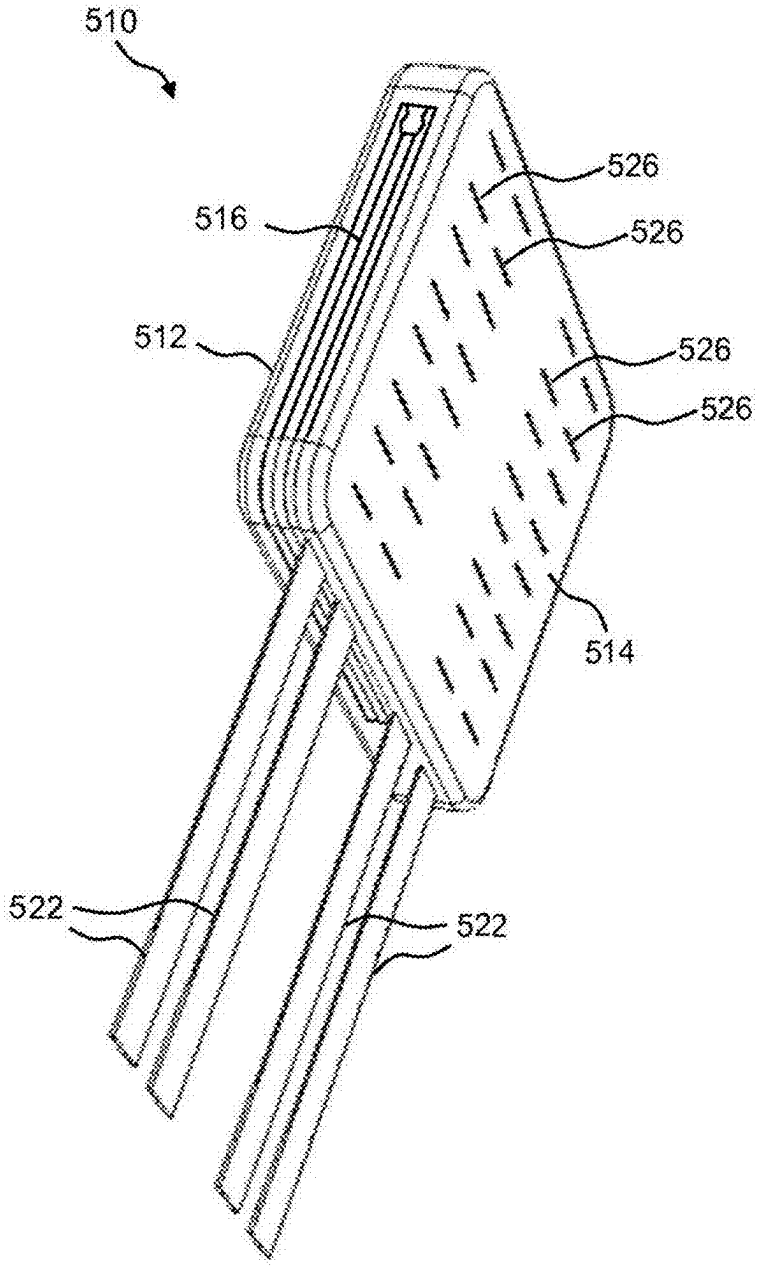

FIG. 10

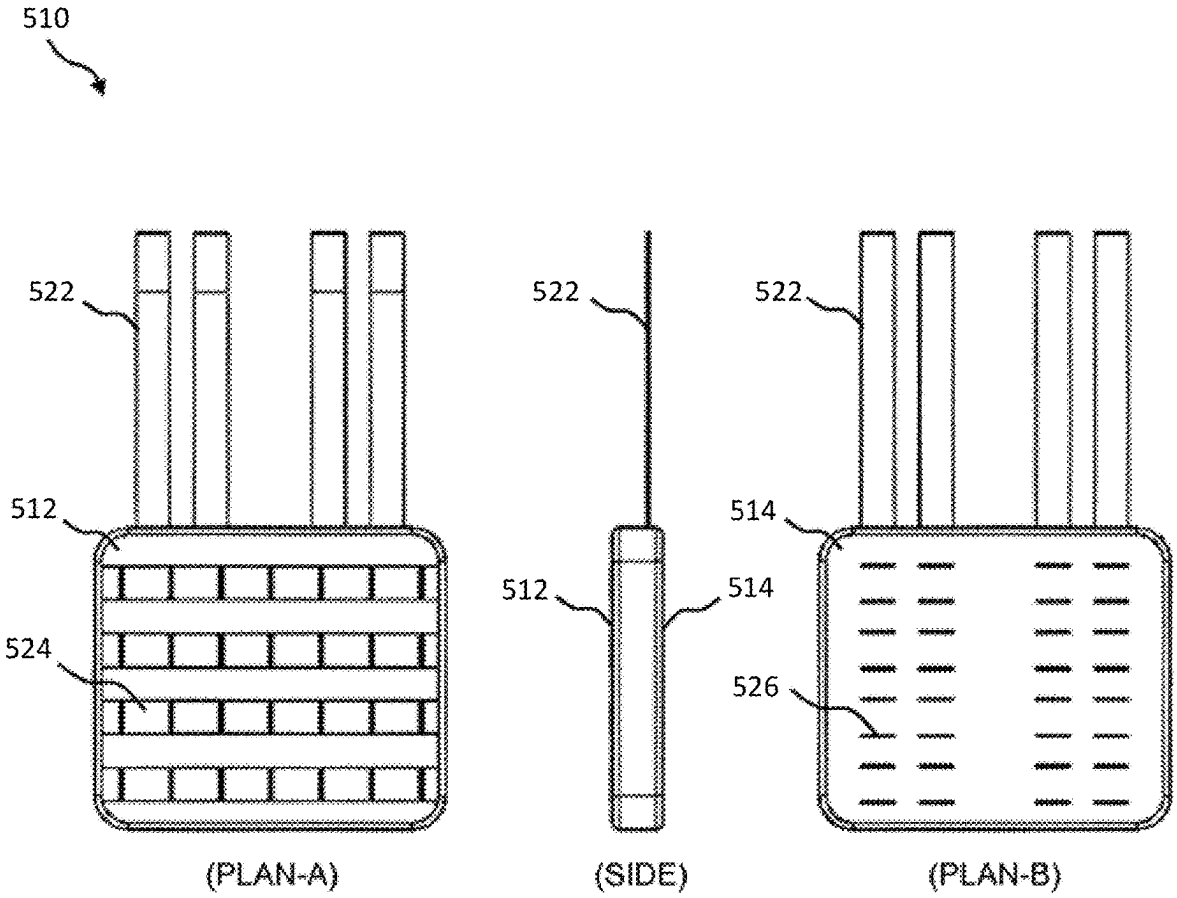

FIG. 11A FIG. 11B FIG. 11C

FIG. 11D FIG. 11E

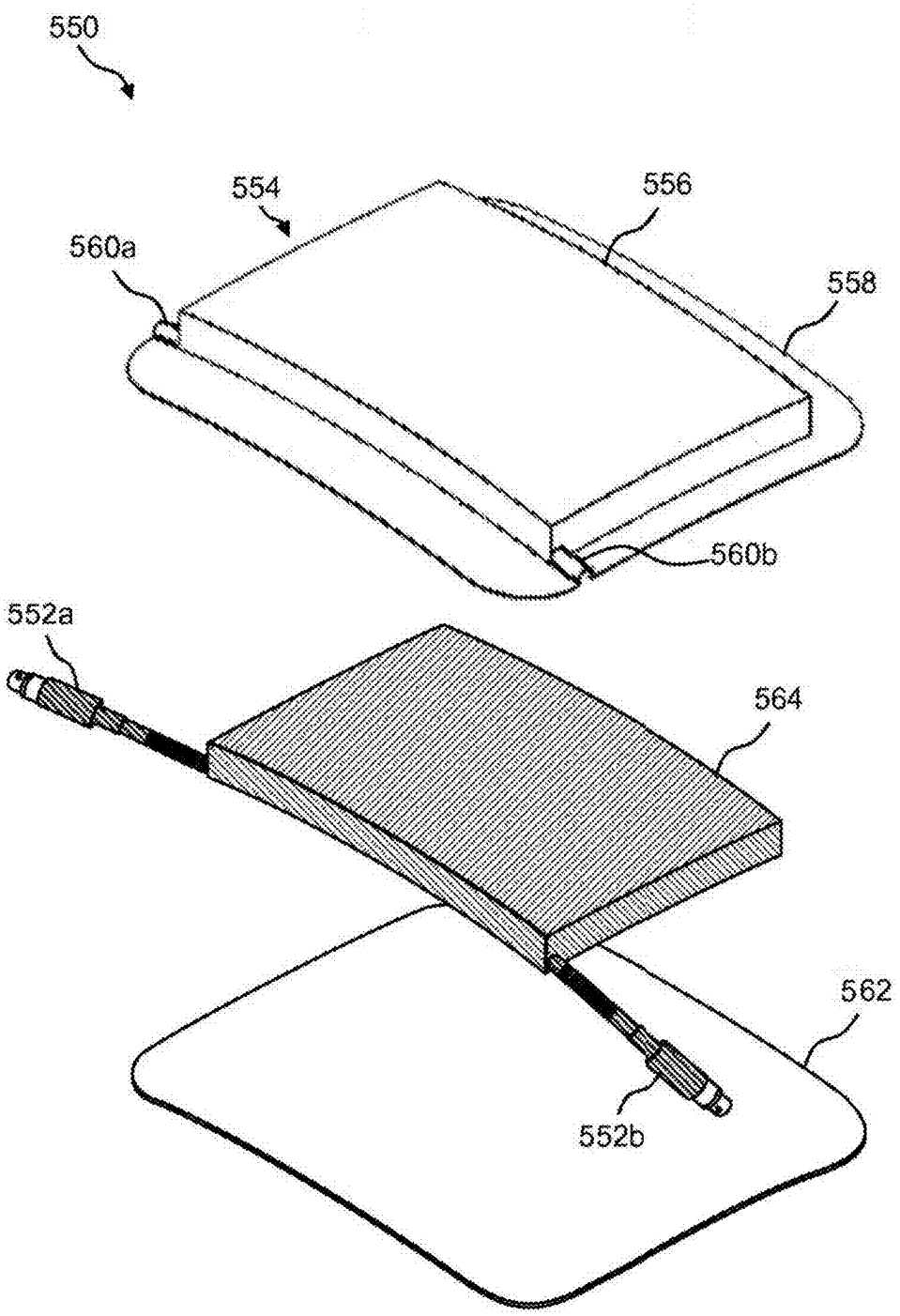

FIG. 12A

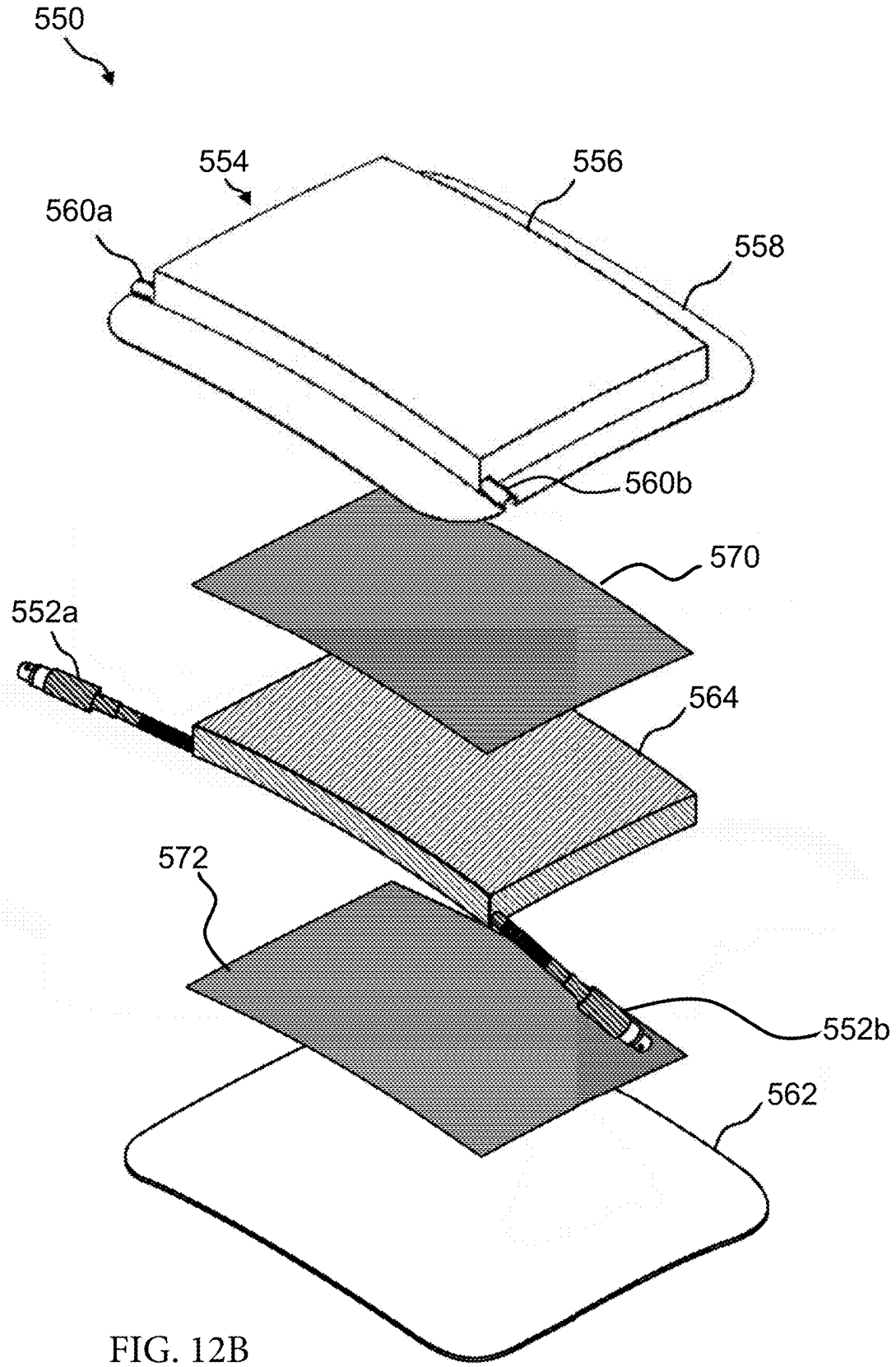

FIG. 12B

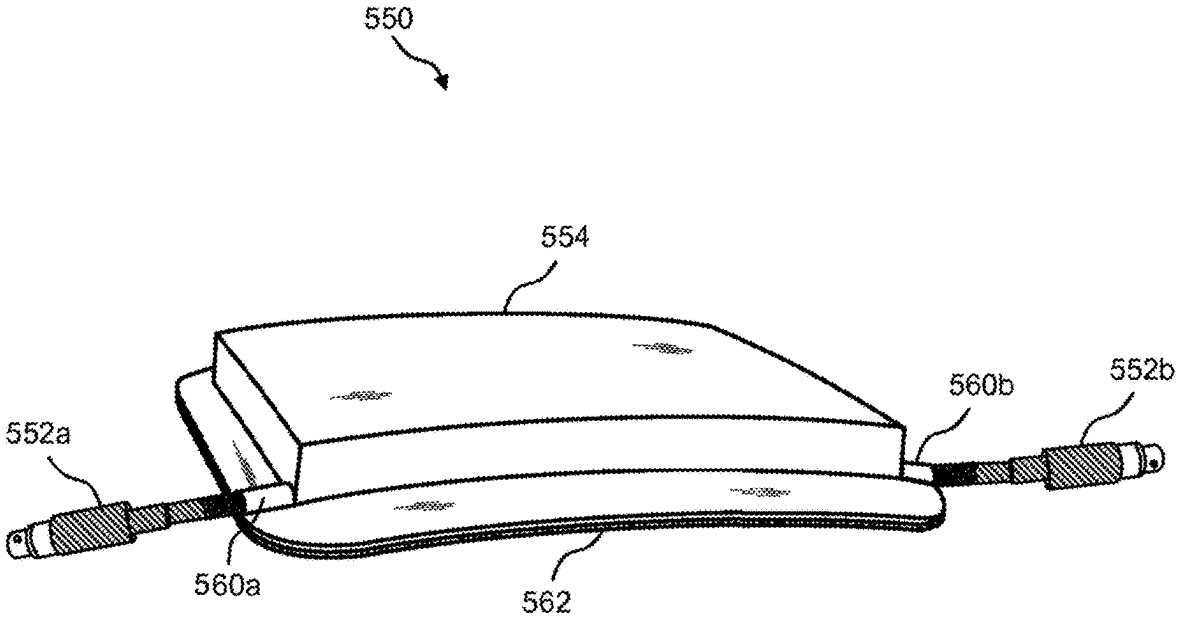

FIG. 13

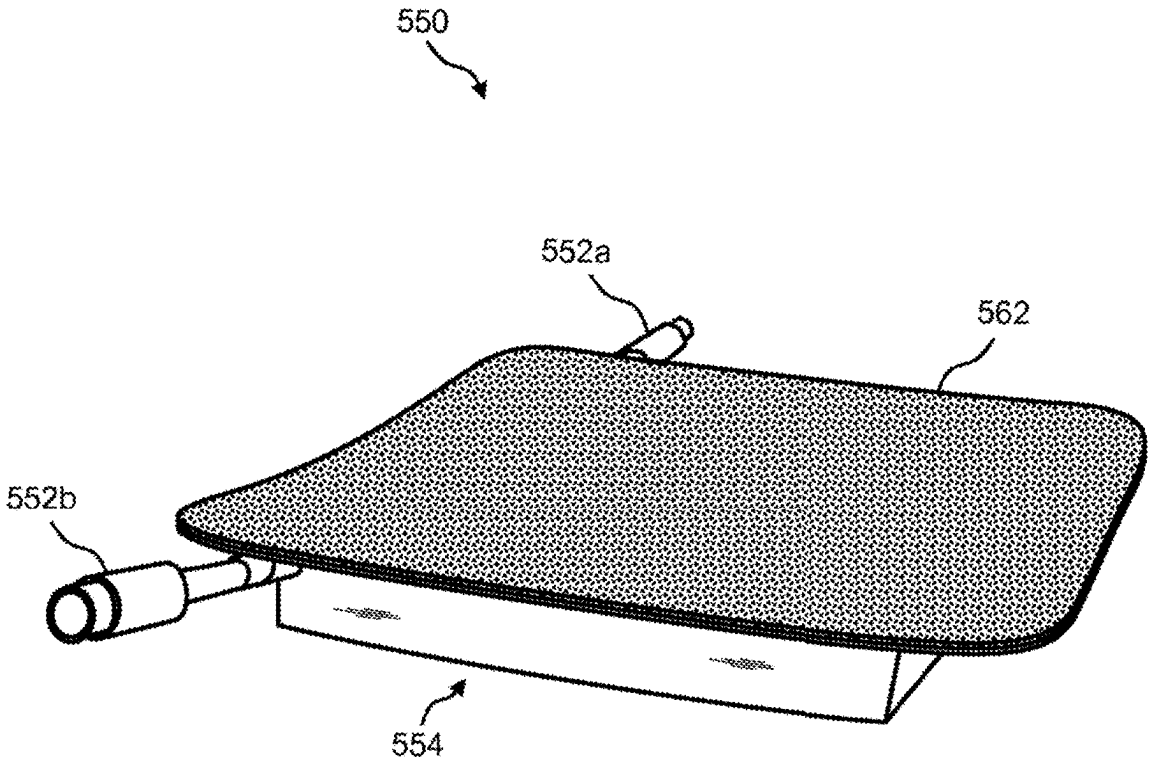

FIG. 14

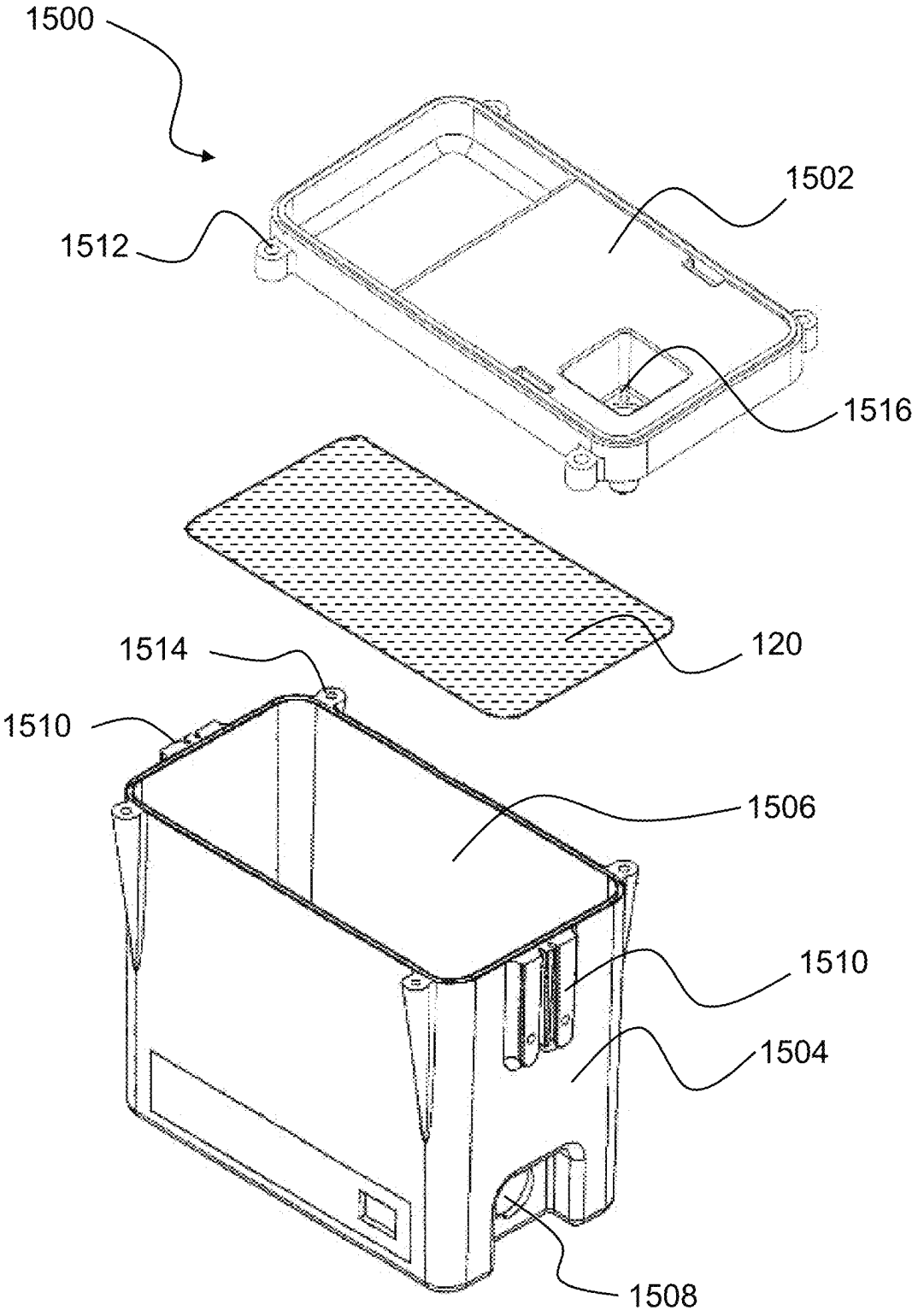

FIG. 15

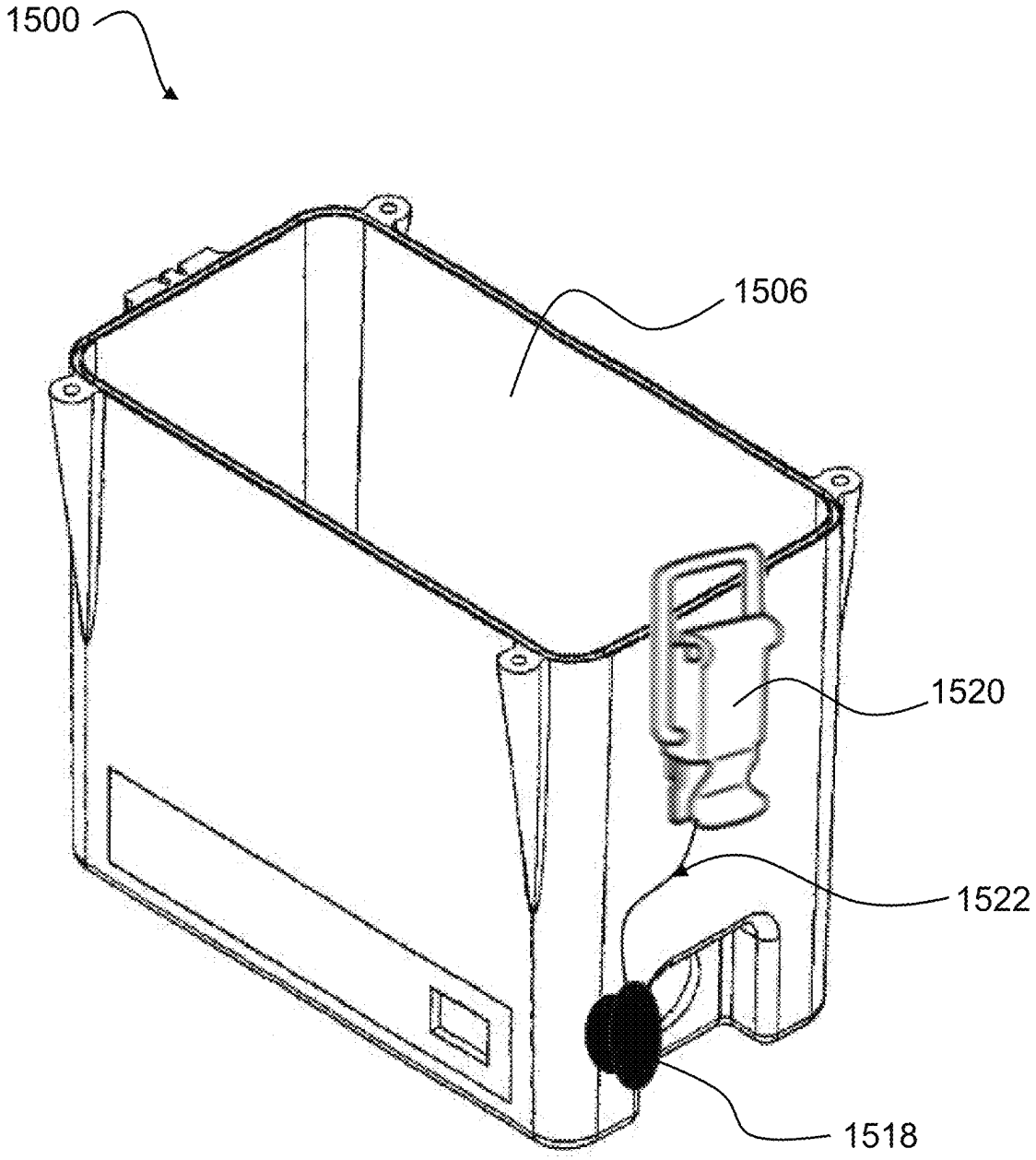

FIG. 16

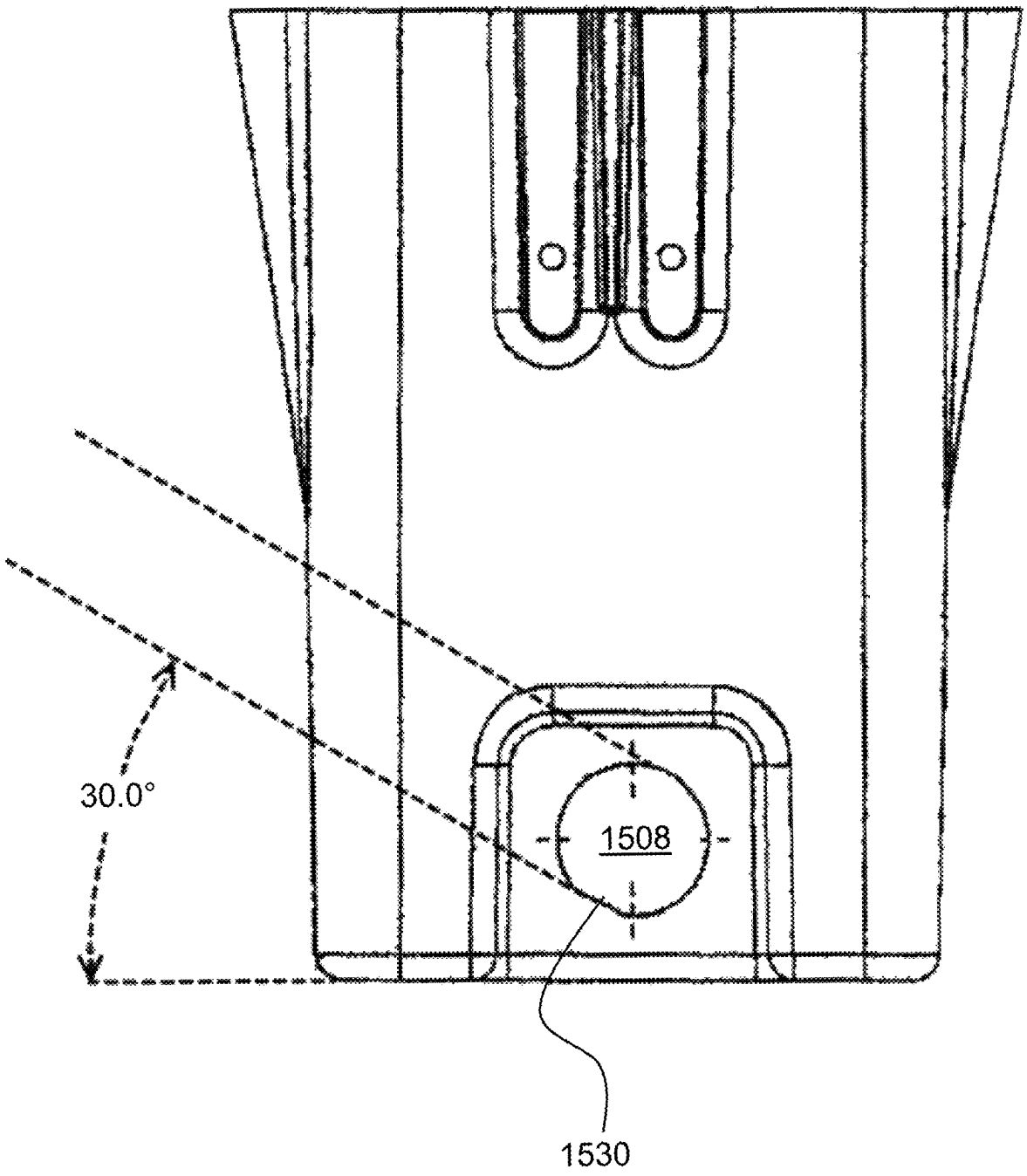

FIG. 17

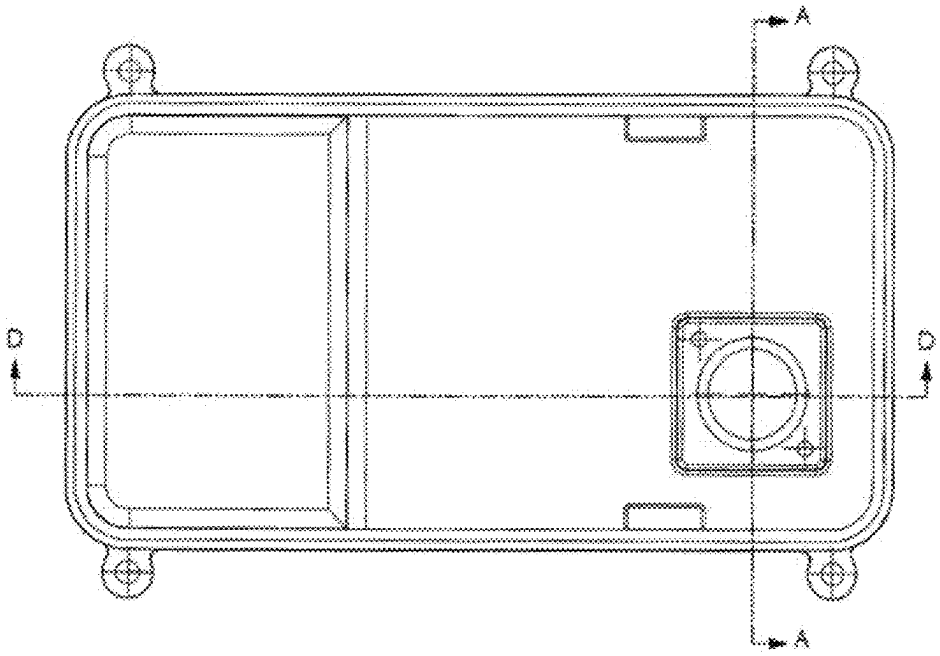

FIG. 18A

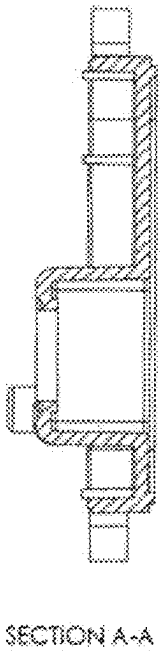

FIG. 18B

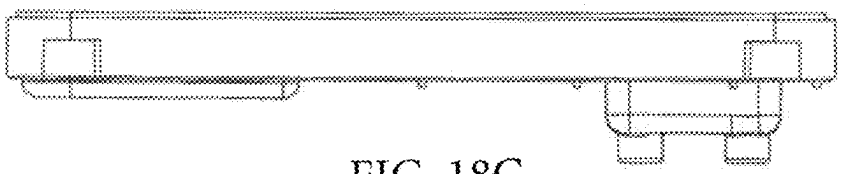

FIG. 18C

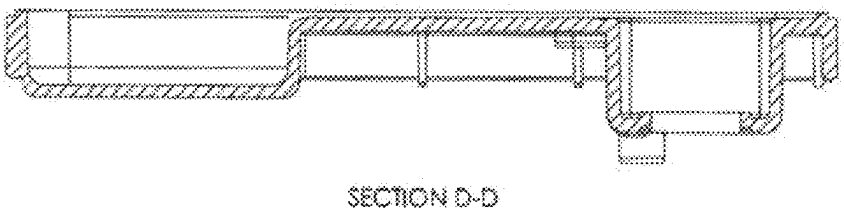

FIG. 18D

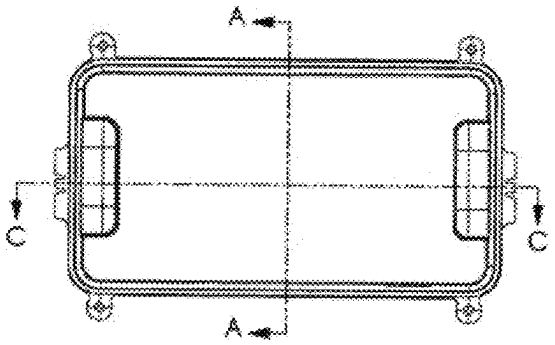

FIG. 19A

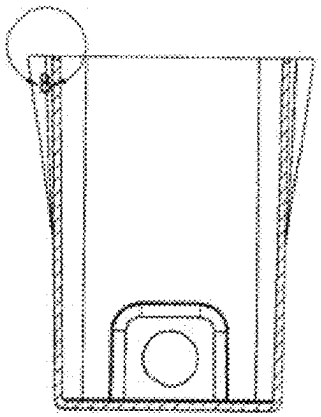

SECTION A-A

FIG. 19B

DETAIL B
SCALE 2 : 1

FIG. 19C

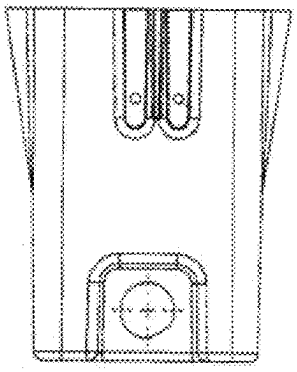

FIG. 19D

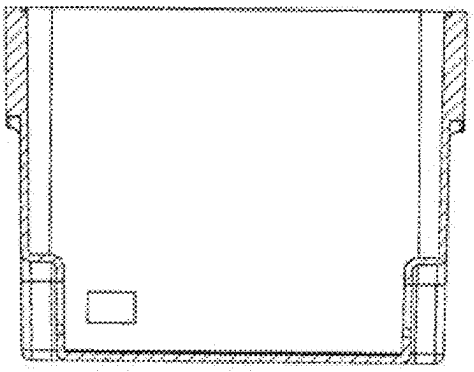

SECTION C-C

FIG. 19E

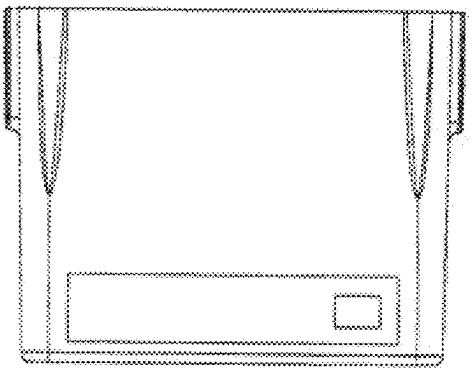

FIG. 19F

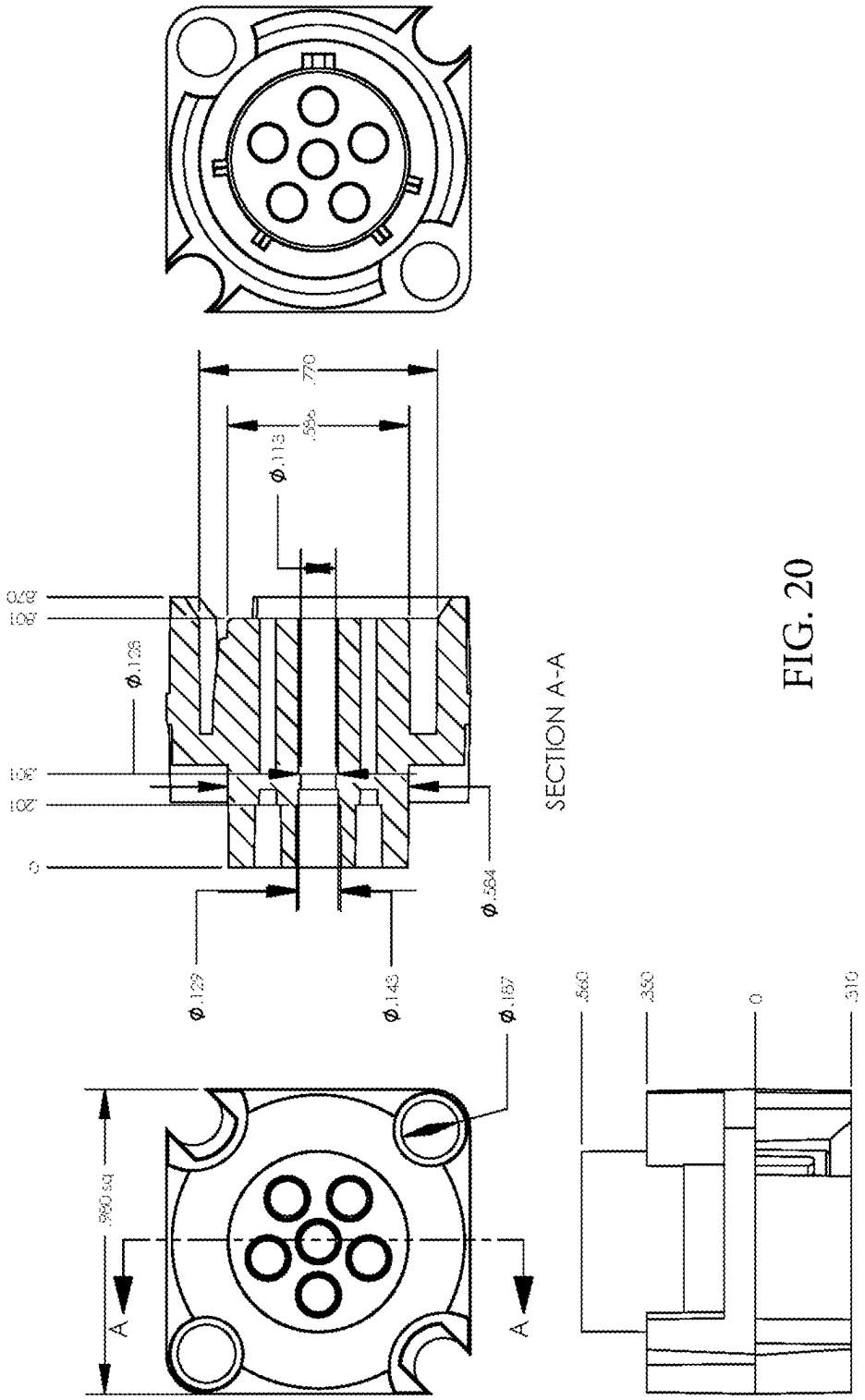
.770
.586
Ø.113
.870
.820
Ø.136
.520
.470
0
Ø.129
Ø.143
Ø.167
Ø.564
SECTION A-A
.990 sq
A
A
.560
.350
0
.310

FIG. 20

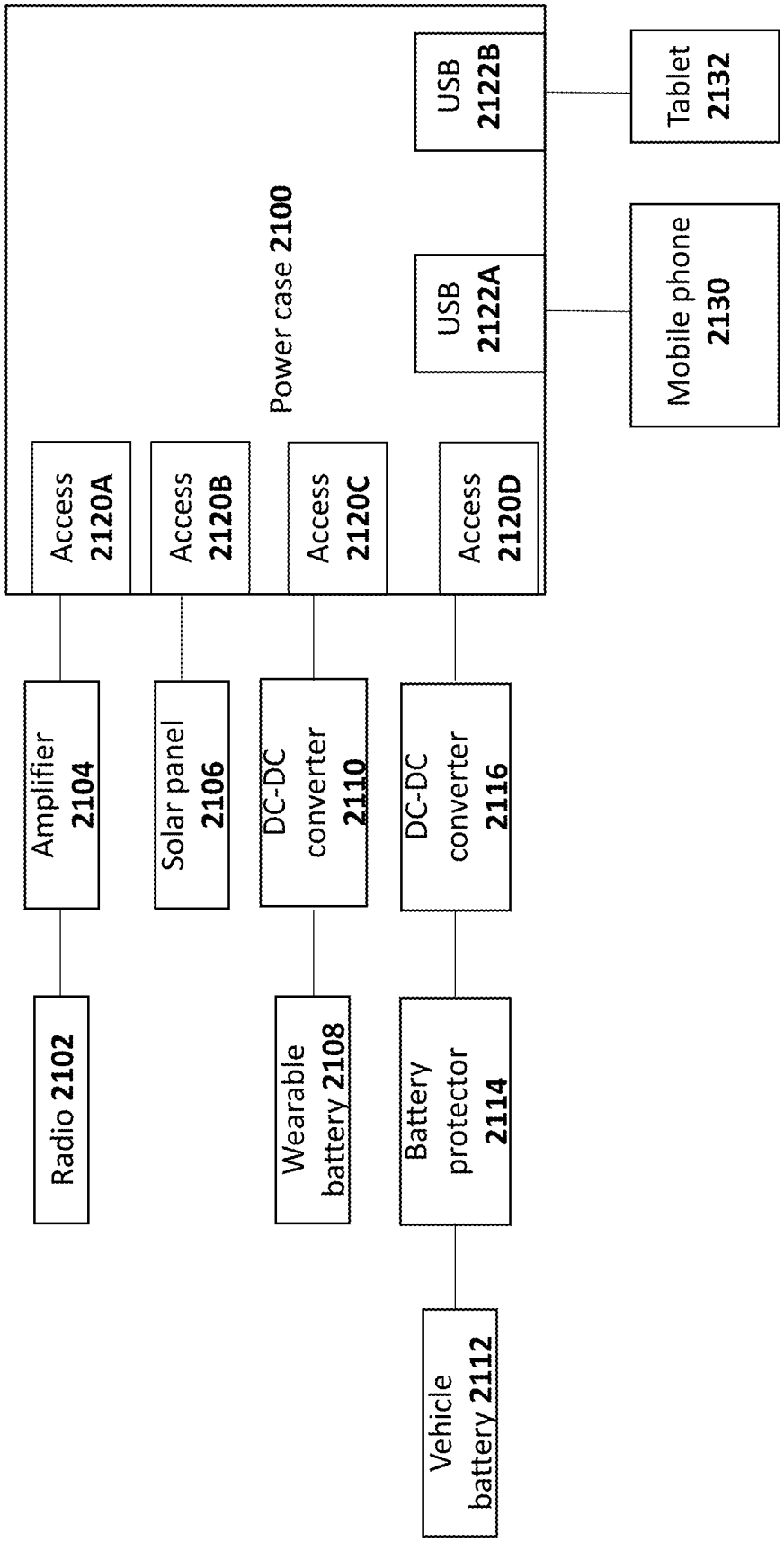
Power case 2100
Access 2120A
Access 2120B
Access 2120C
Access 2120D
USB 2122A
USB 2122B
Mobile phone 2130
Tablet 2132
Amplifier 2104
Solar panel 2106
DC-DC converter 2110
DC-DC converter 2116
Radio 2102
Wearable battery 2108
Battery protector 2114
Vehicle battery 2112

FIG. 21

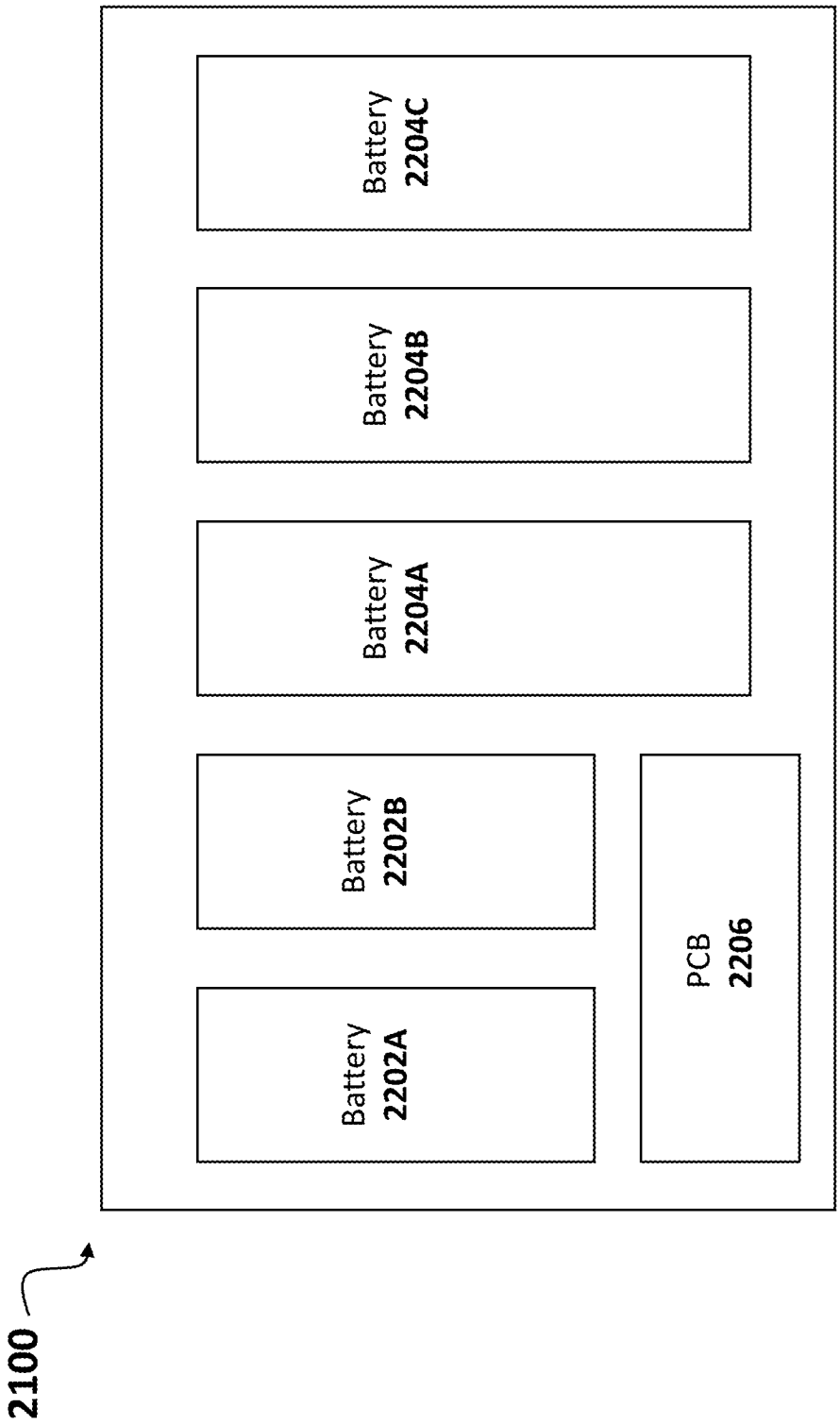
2100
Battery 2202A
Battery 2202B
Battery 2204A
Battery 2204B
Battery 2204C
PCB 2206

FIG. 22

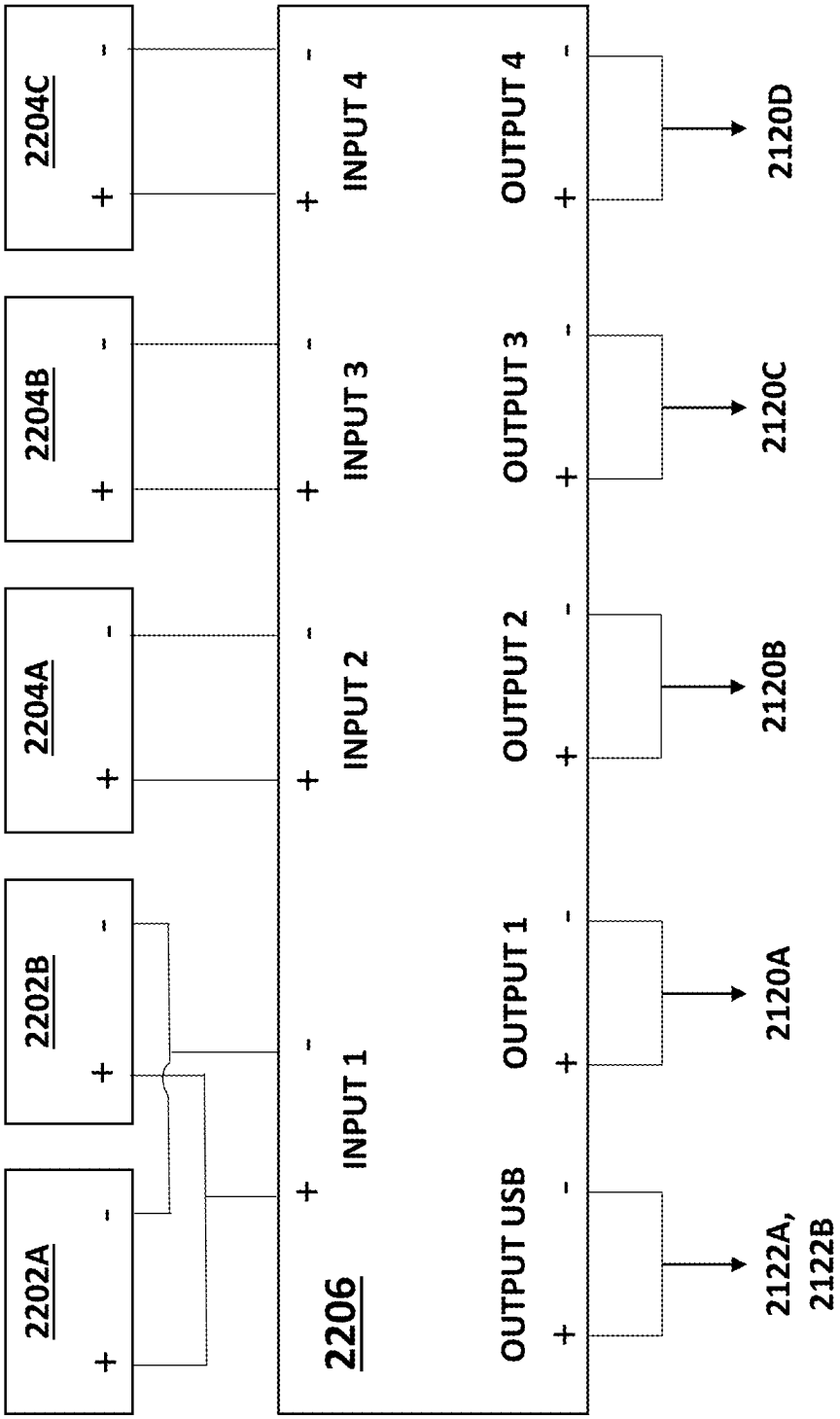
2202A
2202B
2204A
2204B
2204C
2206
INPUT 1
INPUT 2
INPUT 3
INPUT 4
OUTPUT USB
OUTPUT 1
OUTPUT 2
OUTPUT 3
OUTPUT 4
2122A, 2122B
2120A
2120B
2120C
2120D

FIG. 23

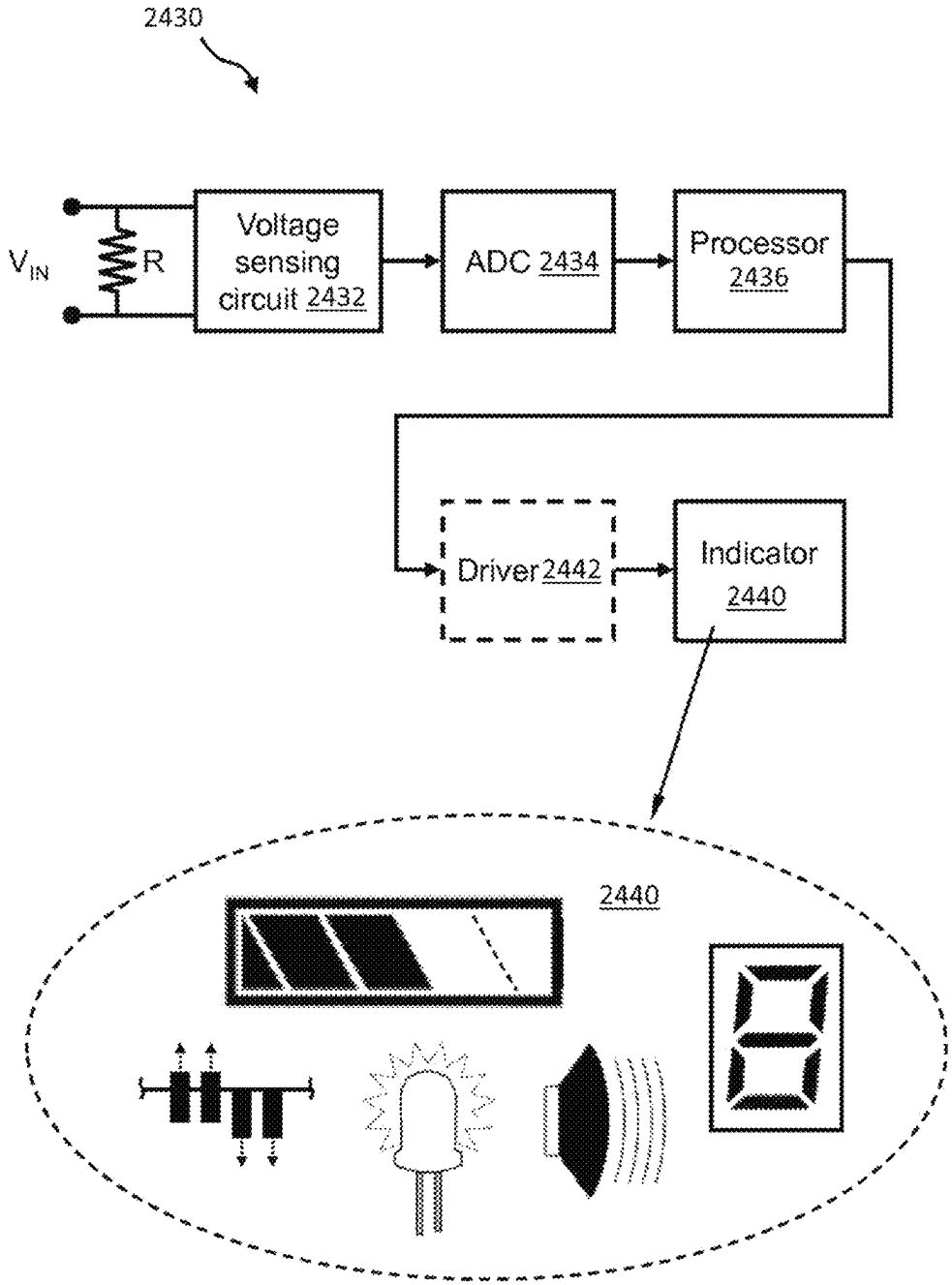
2430
V_{IN}
R
Voltage sensing circuit 2432
ADC 2434
Processor 2436
Driver 2442
Indicator 2440
2440

FIG. 24

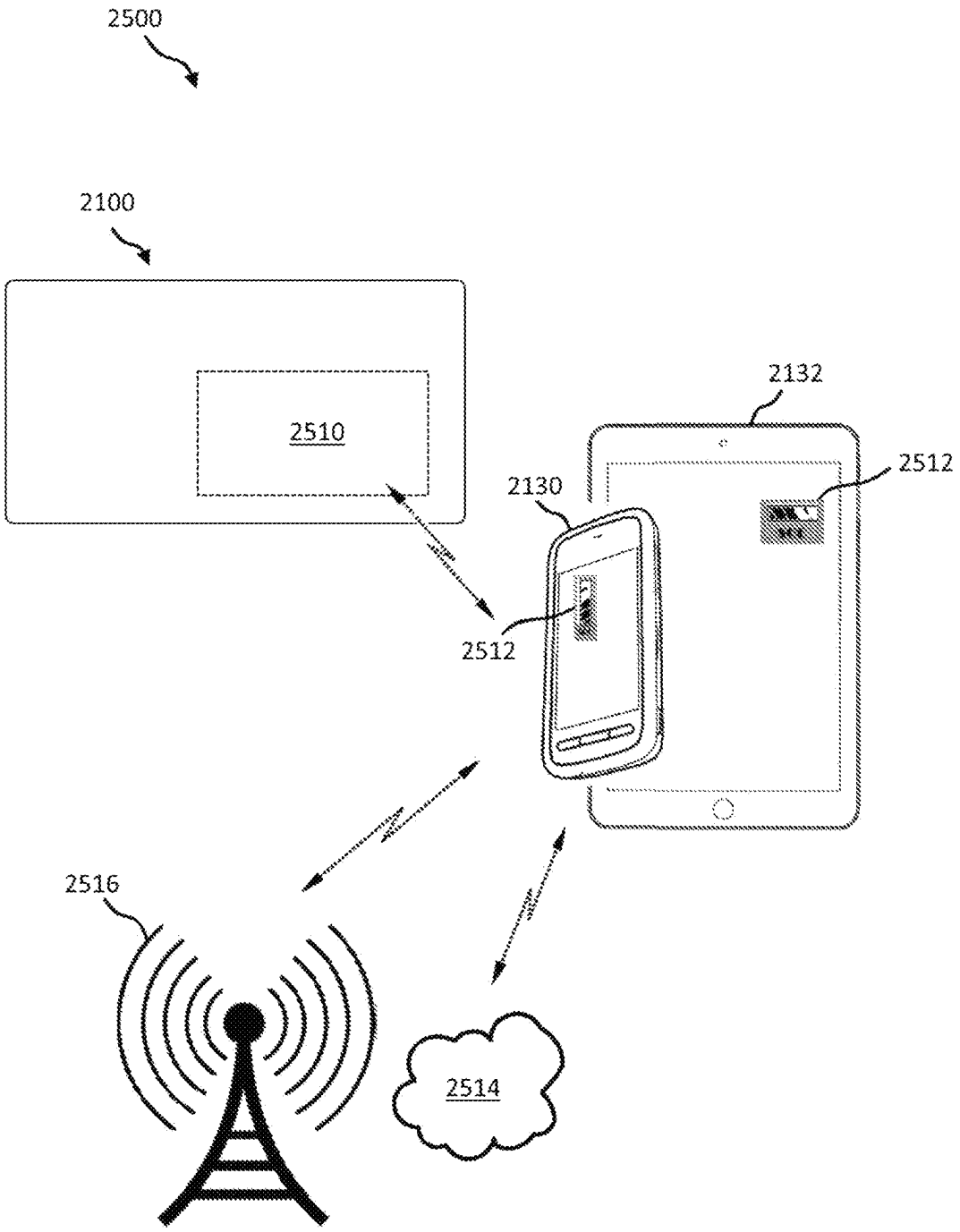

FIG. 25A

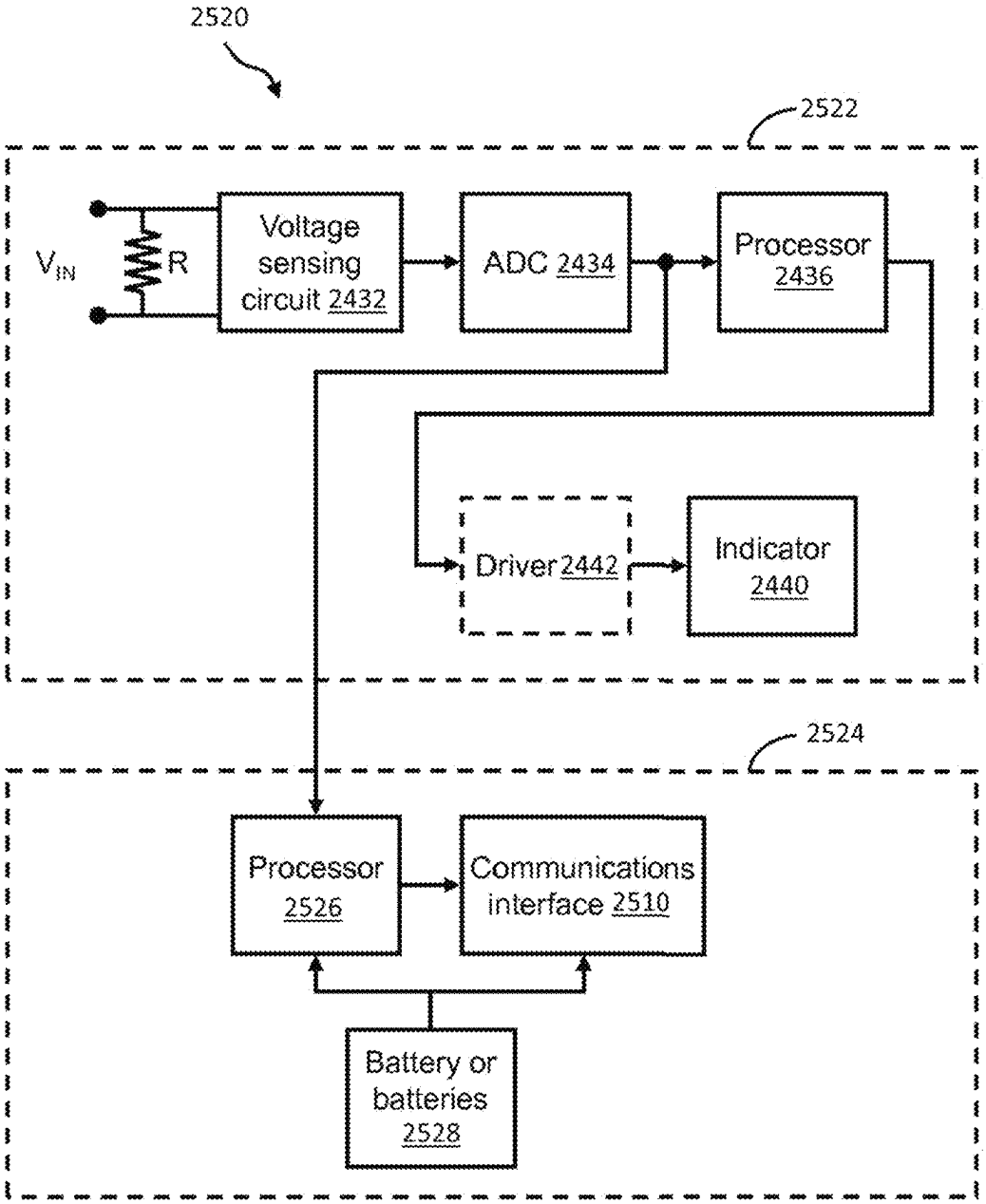
2520
2522
V_{IN}
R
Voltage sensing circuit 2432
ADC 2434
Processor 2436
Driver 2442
Indicator 2440
2524
Processor 2526
Communications interface 2510
Battery or batteries 2528

FIG. 25B

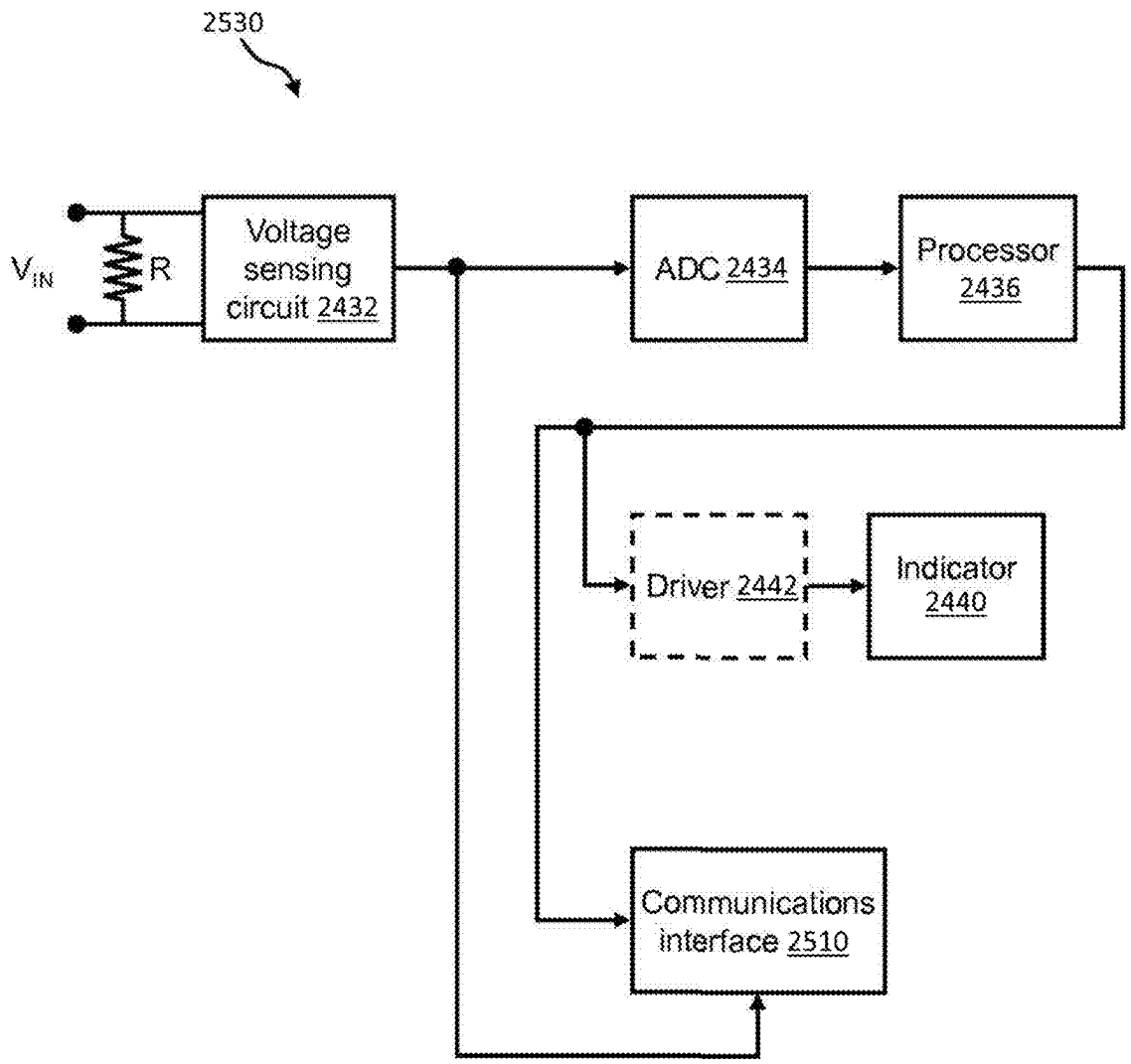
2530
V_{IN}
R
Voltage sensing circuit 2432
ADC 2434
Processor 2436
Driver 2442
Indicator 2440
Communications interface 2510

FIG. 25C

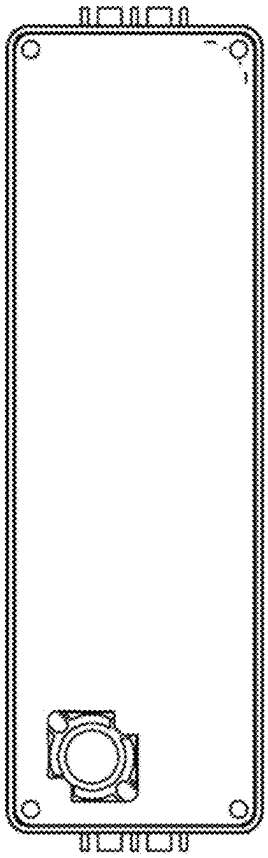

FIG. 26B

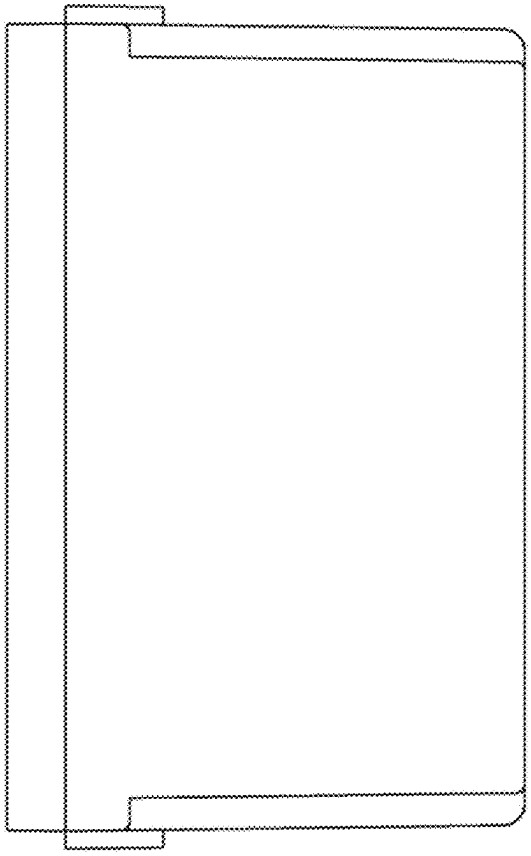

FIG. 26D

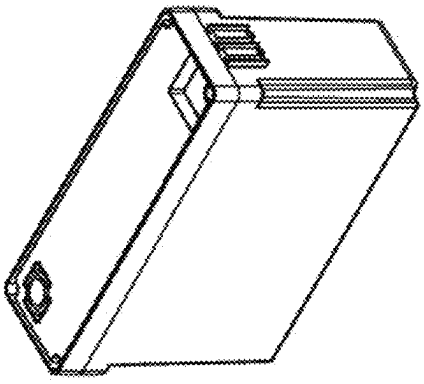

FIG. 26A

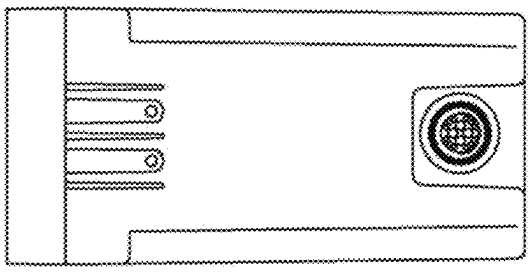

FIG. 26C

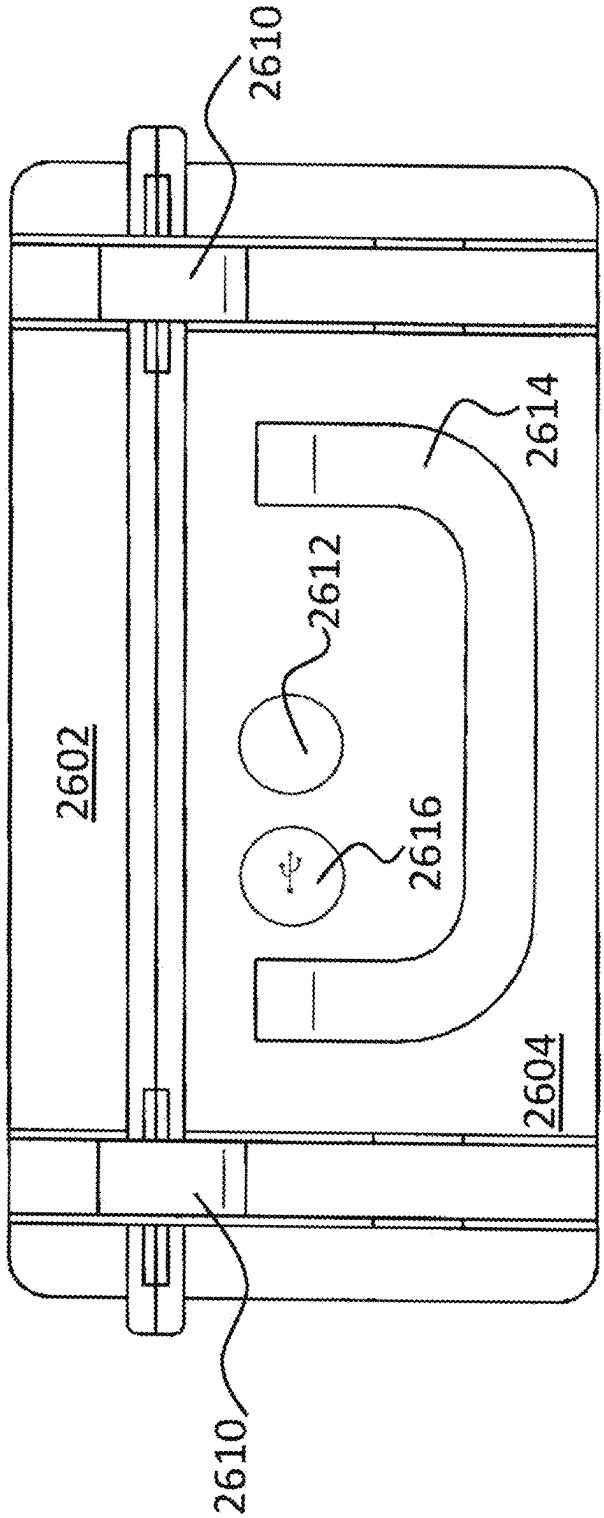

FIG. 27A

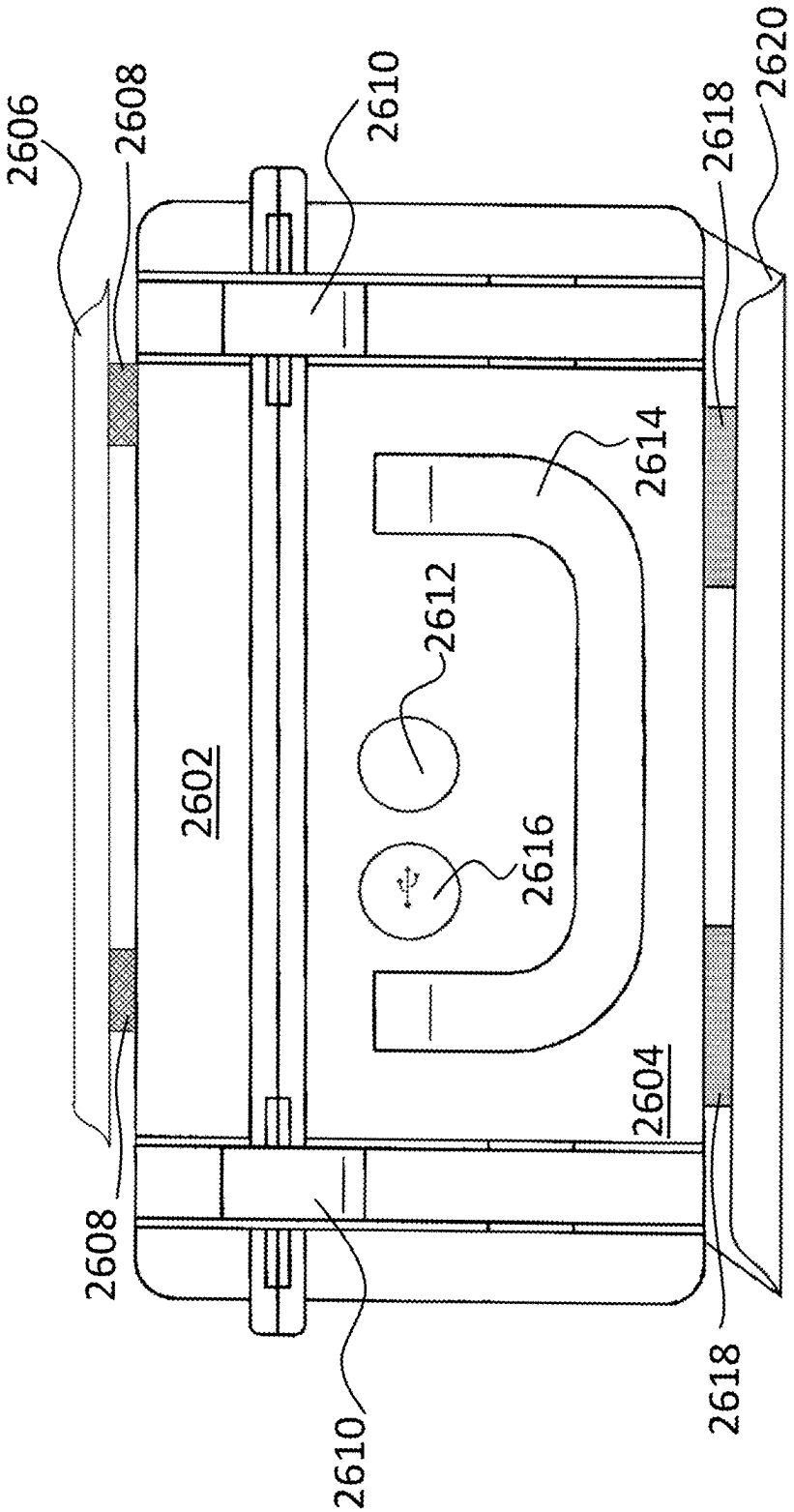
2606
2608
2610
2618
2620
2614
2612
2602
2616
2604
2608
2610
2618

FIG. 27B

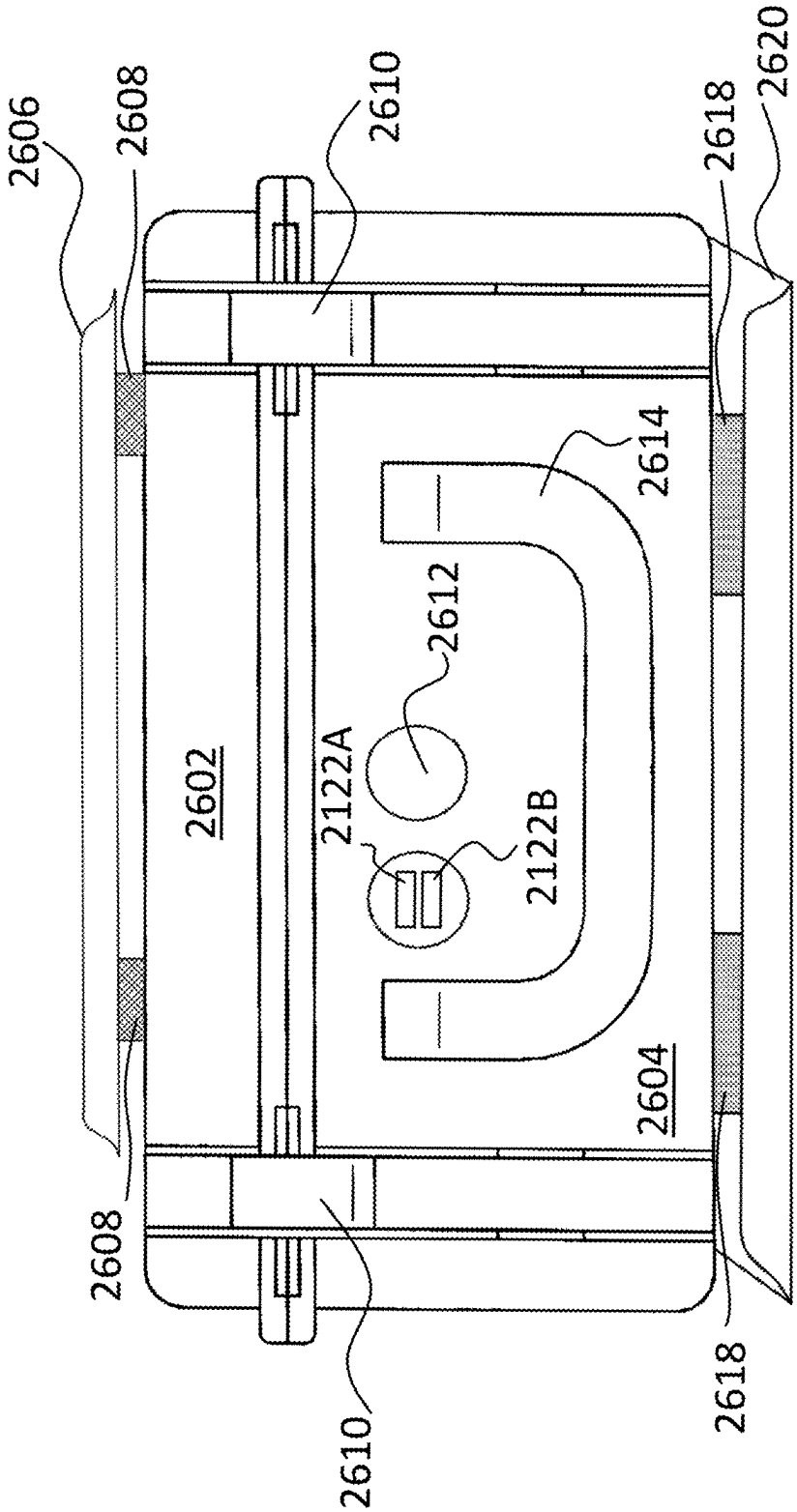
2606
2608
2610
2618
2620
2614
2612
2122A
2122B
2602
2604
2608
2610
2618

FIG. 28

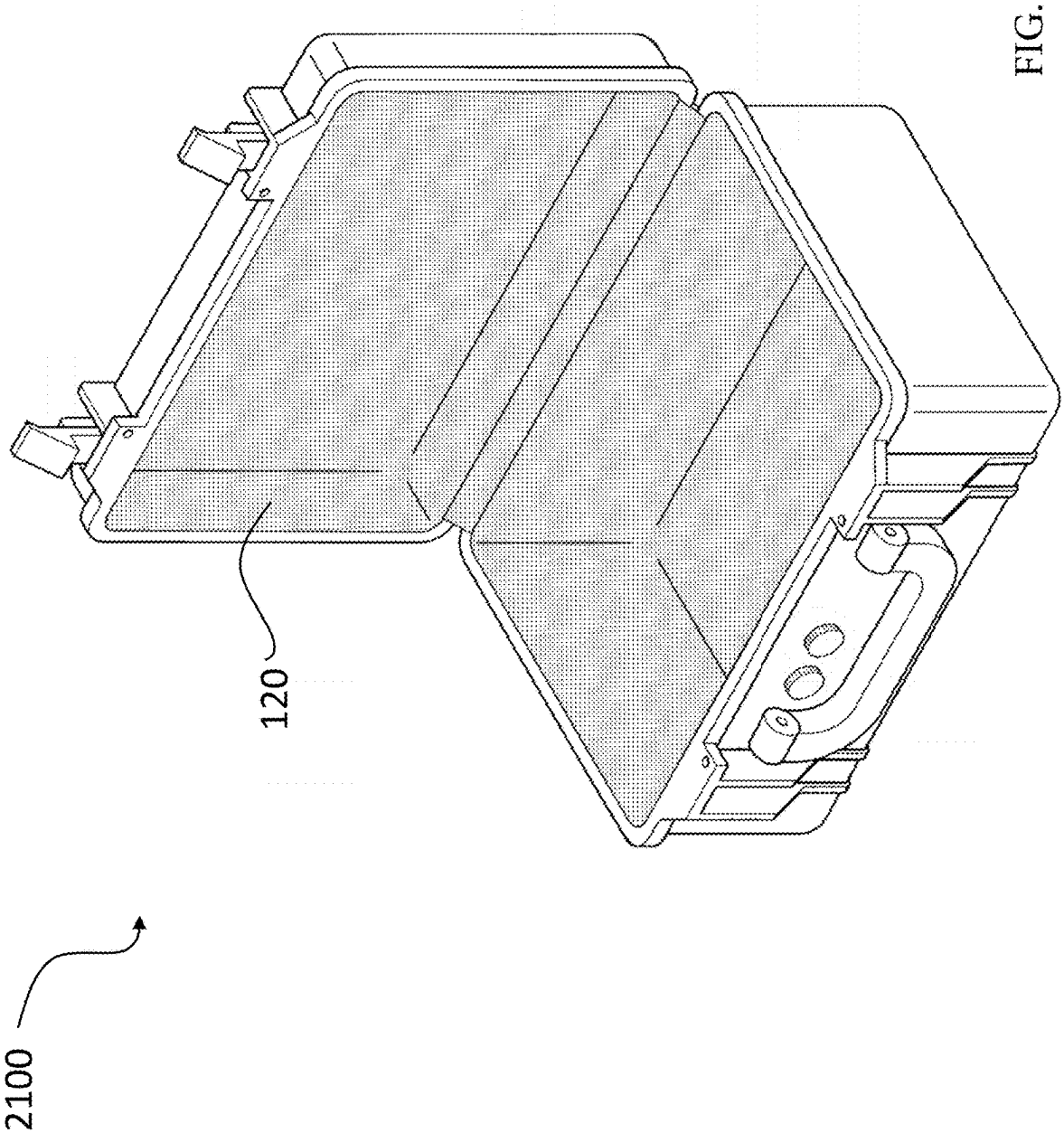

FIG. 29

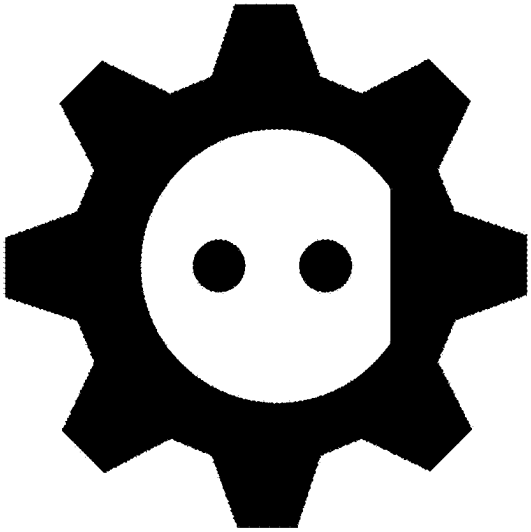

FIG. 30B

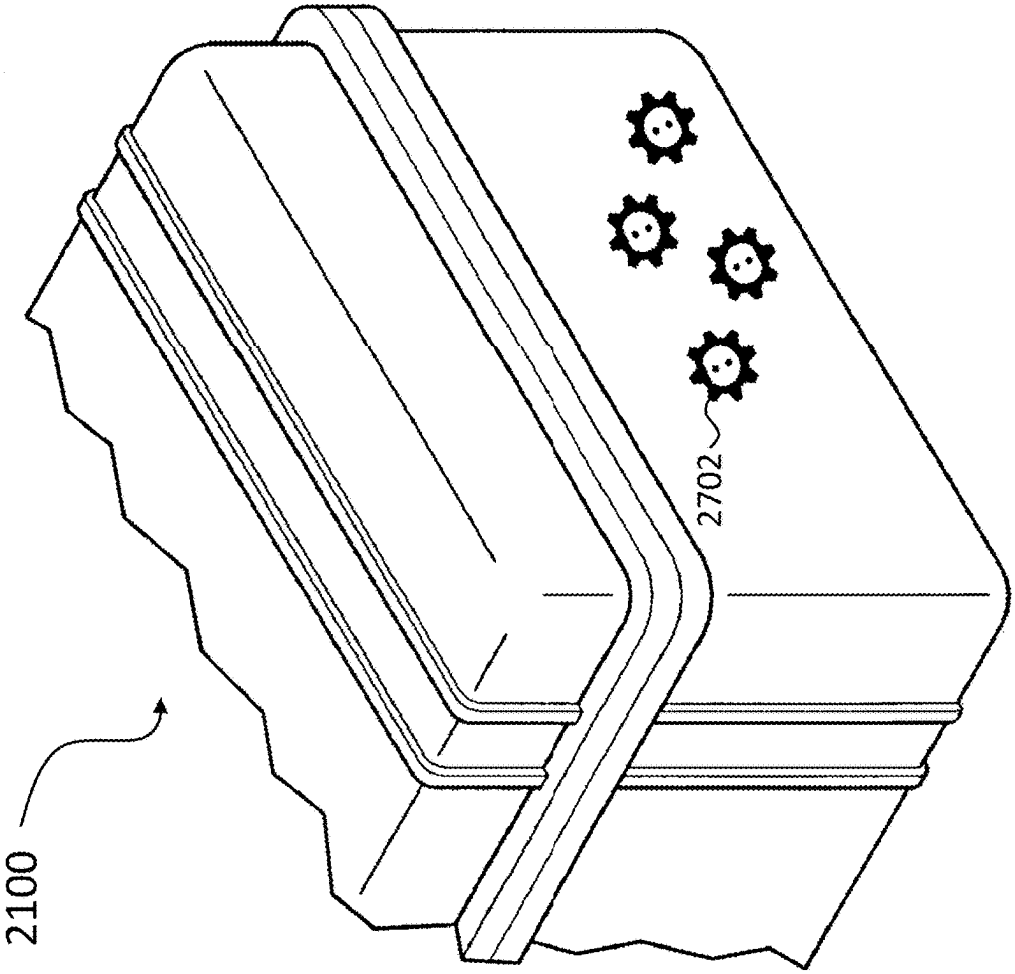

FIG. 30A

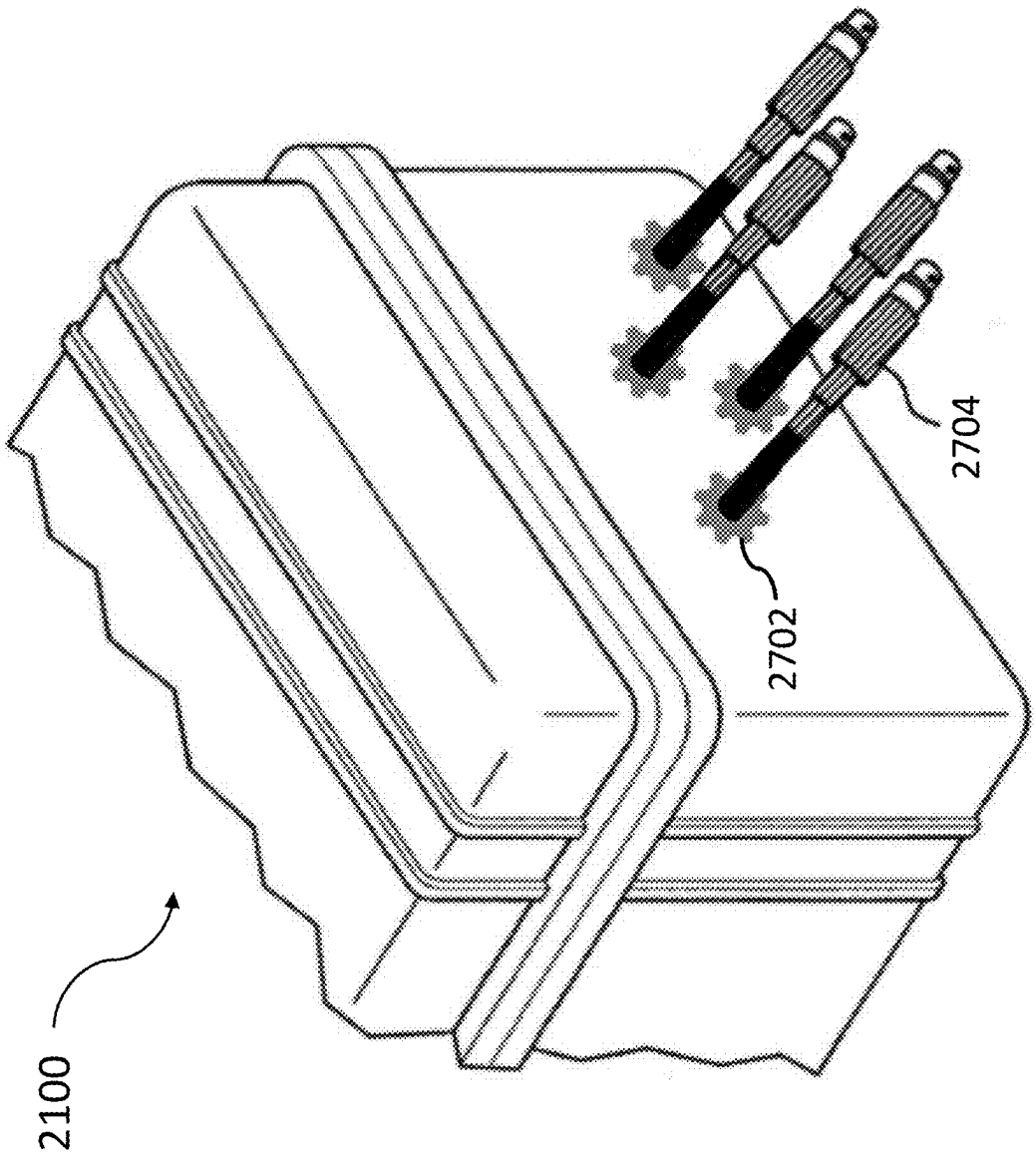

FIG. 30C

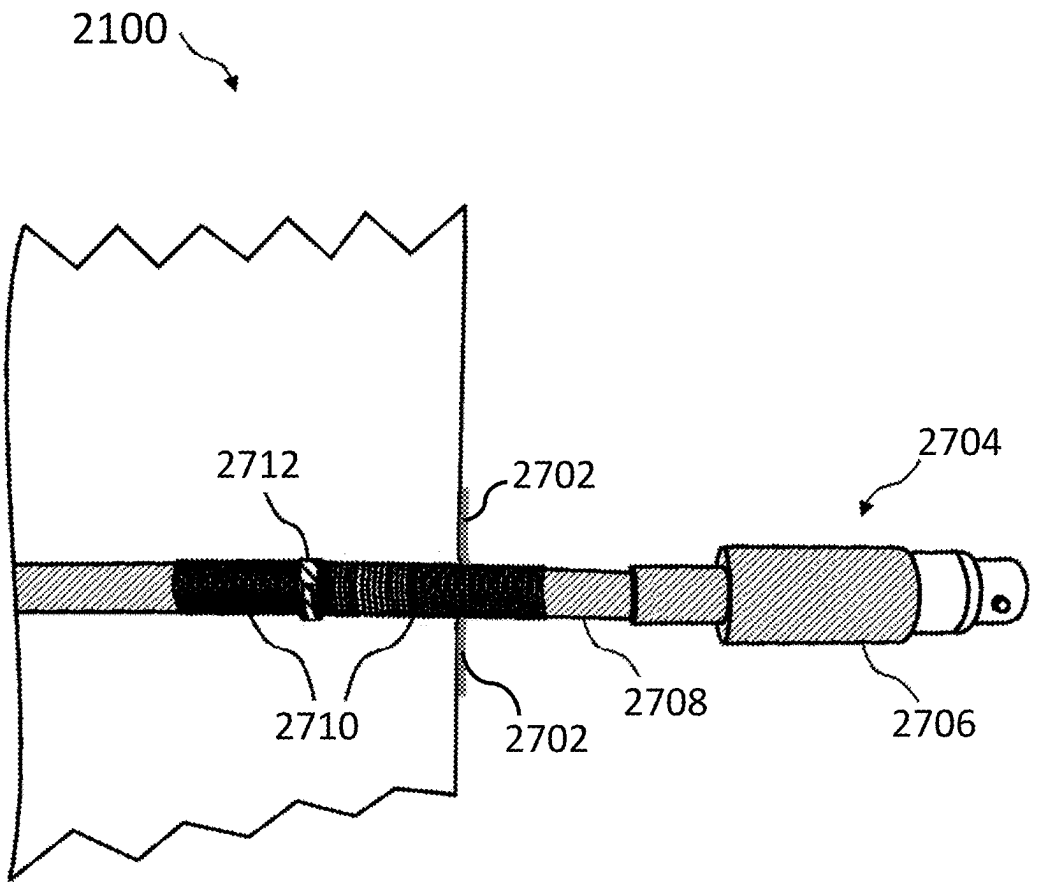

FIG. 30D

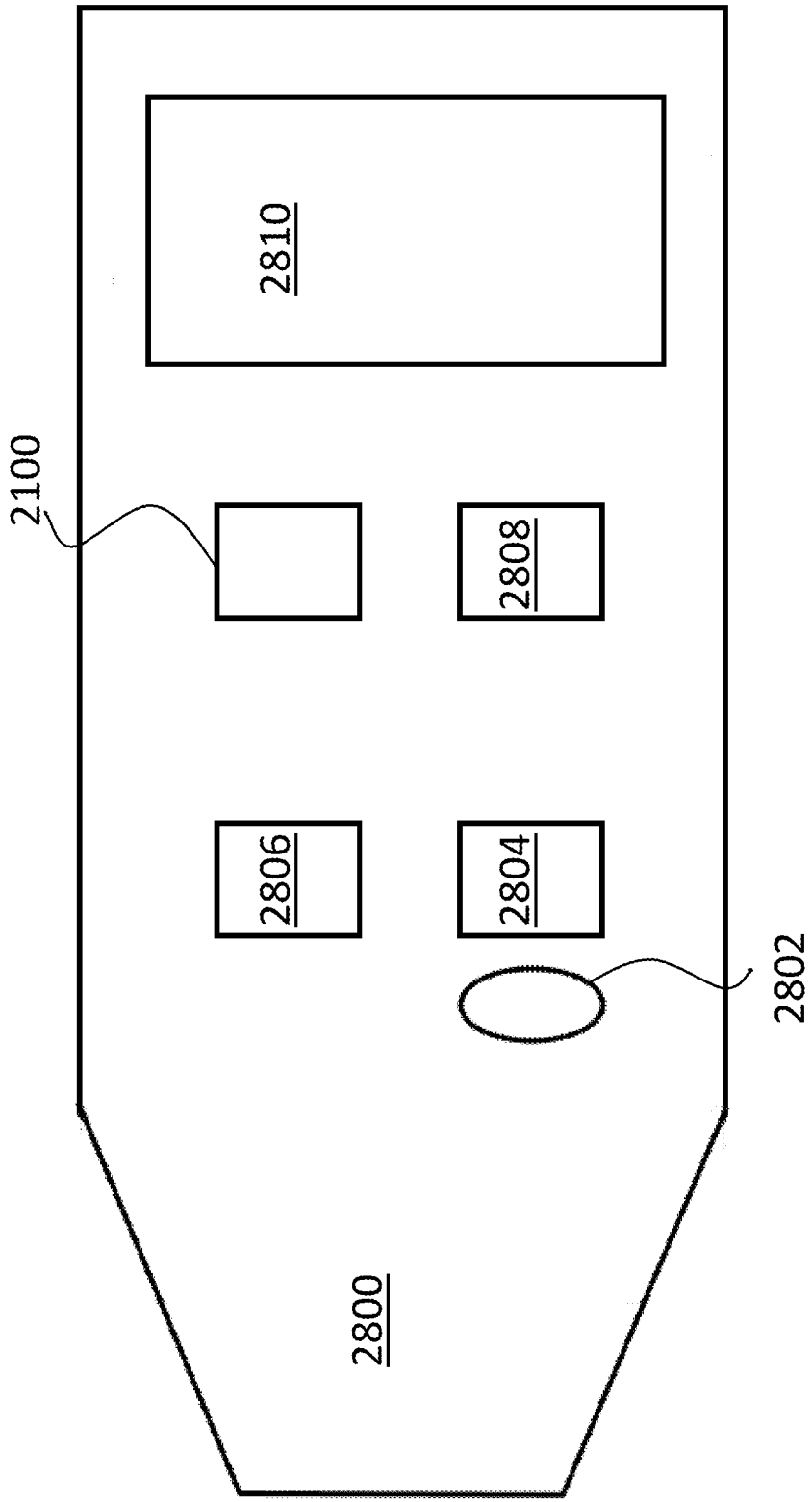

FIG. 31

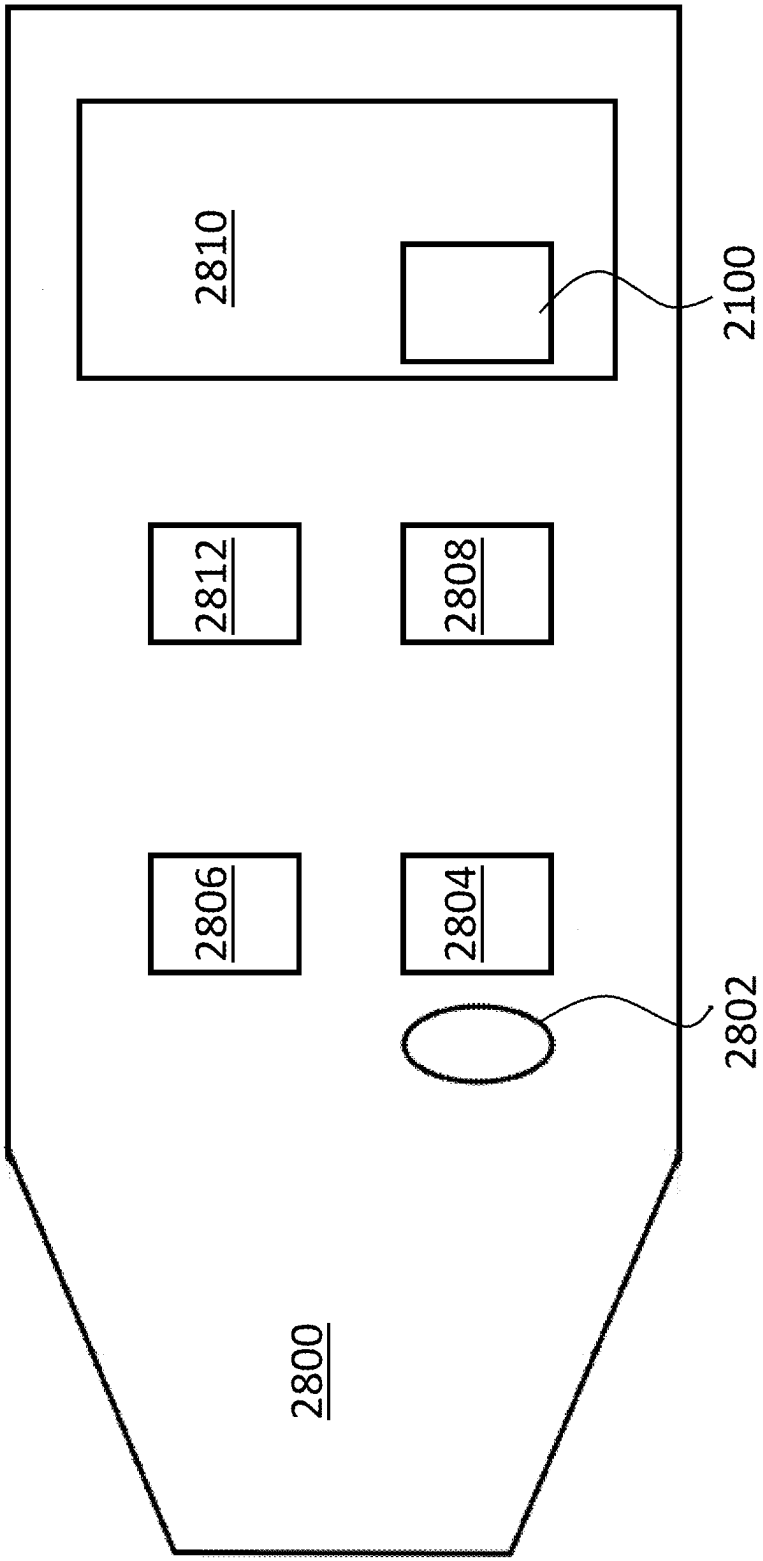

FIG. 32

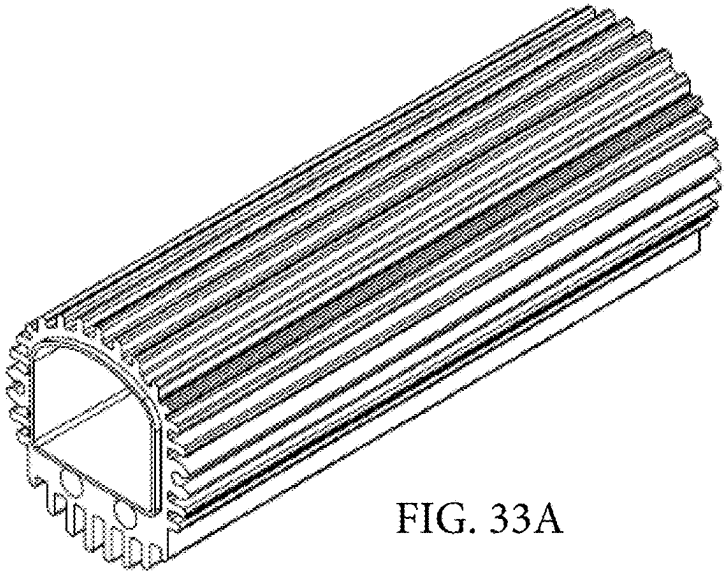

FIG. 33A

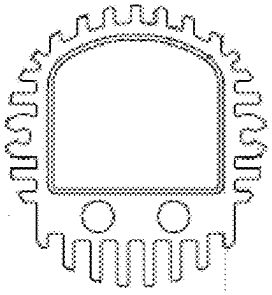

FIG. 33B

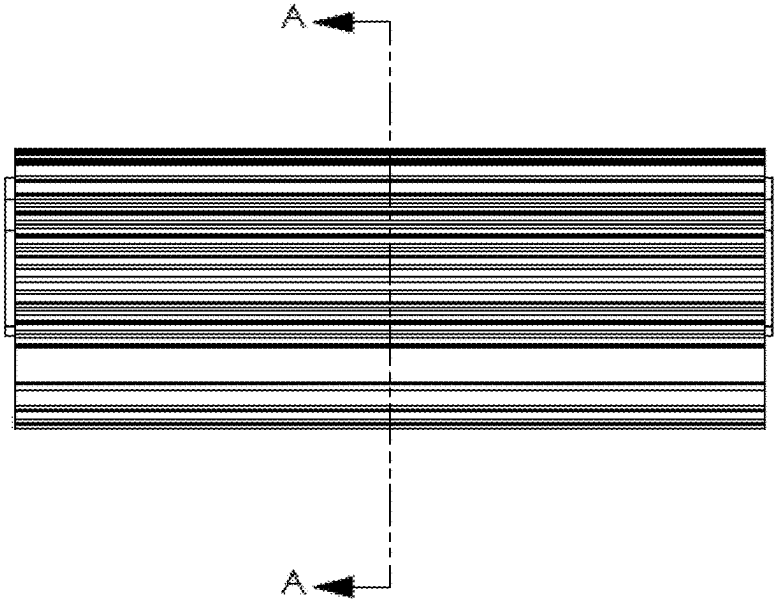

FIG. 33C

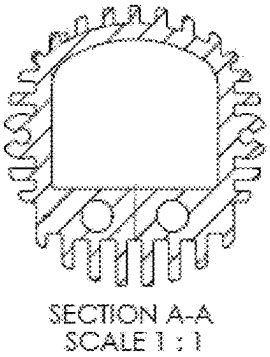

FIG. 33D

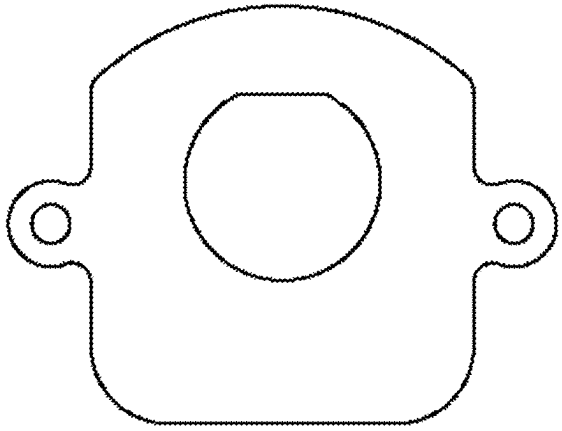

FIG. 33E

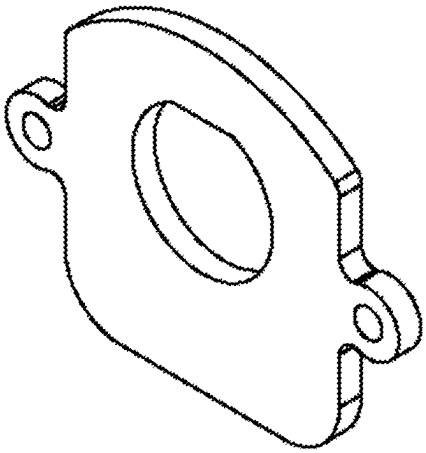

FIG. 33F

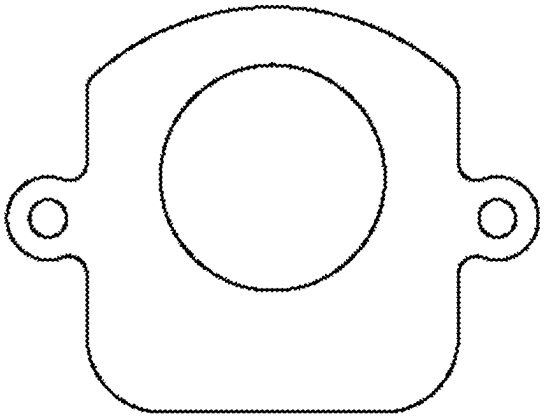

FIG. 33G

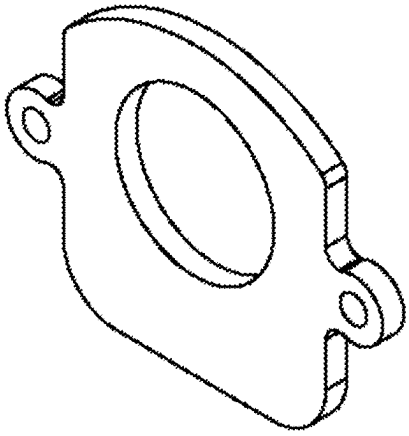

FIG. 33H

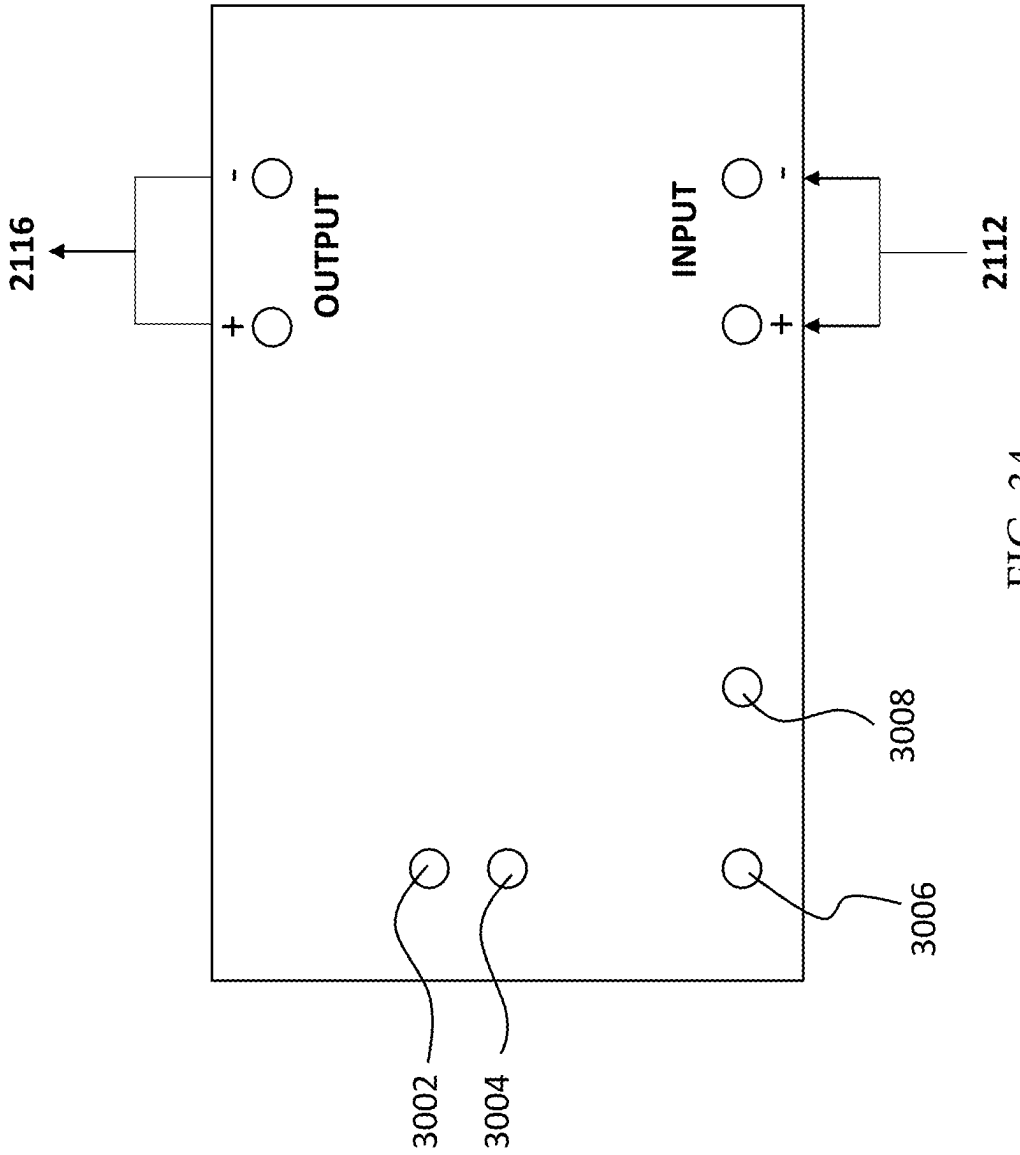

FIG. 34

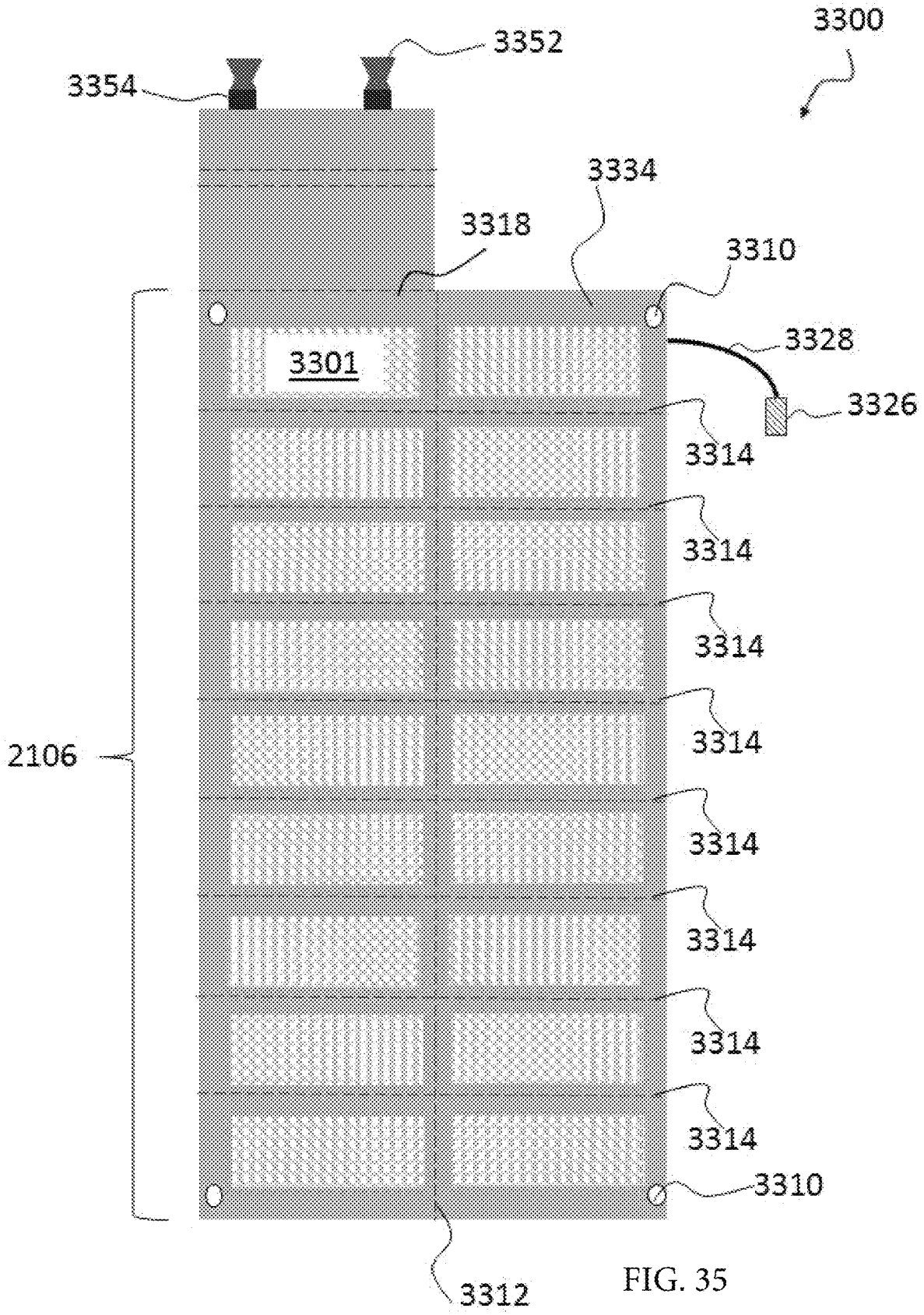
3300
3352
3354
3334
3318
3310
3301
3328
3326
3314
3314
3314
3314
3314
3314
3314
3314
2106
3310
3312

FIG. 35

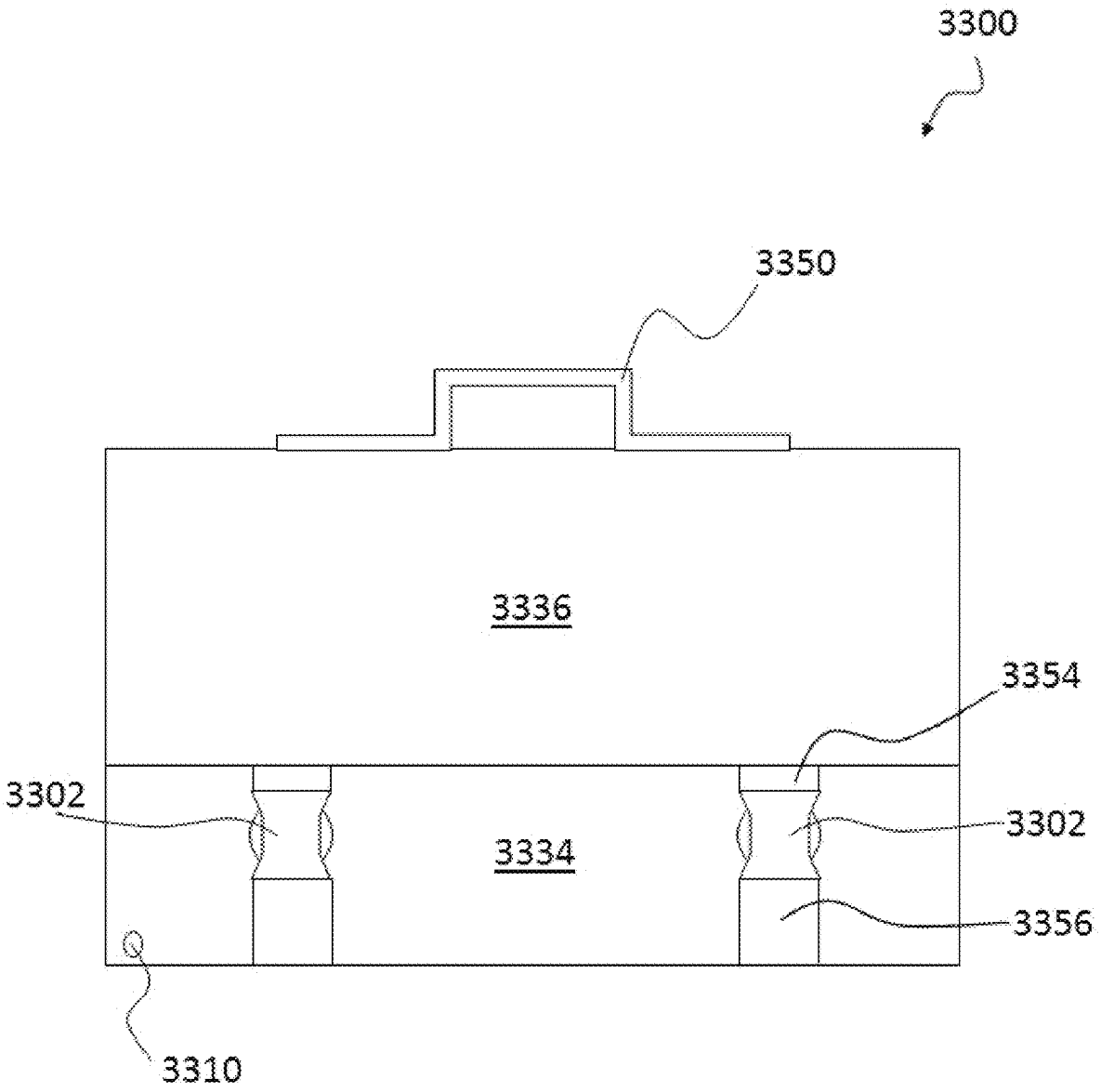

FIG. 36

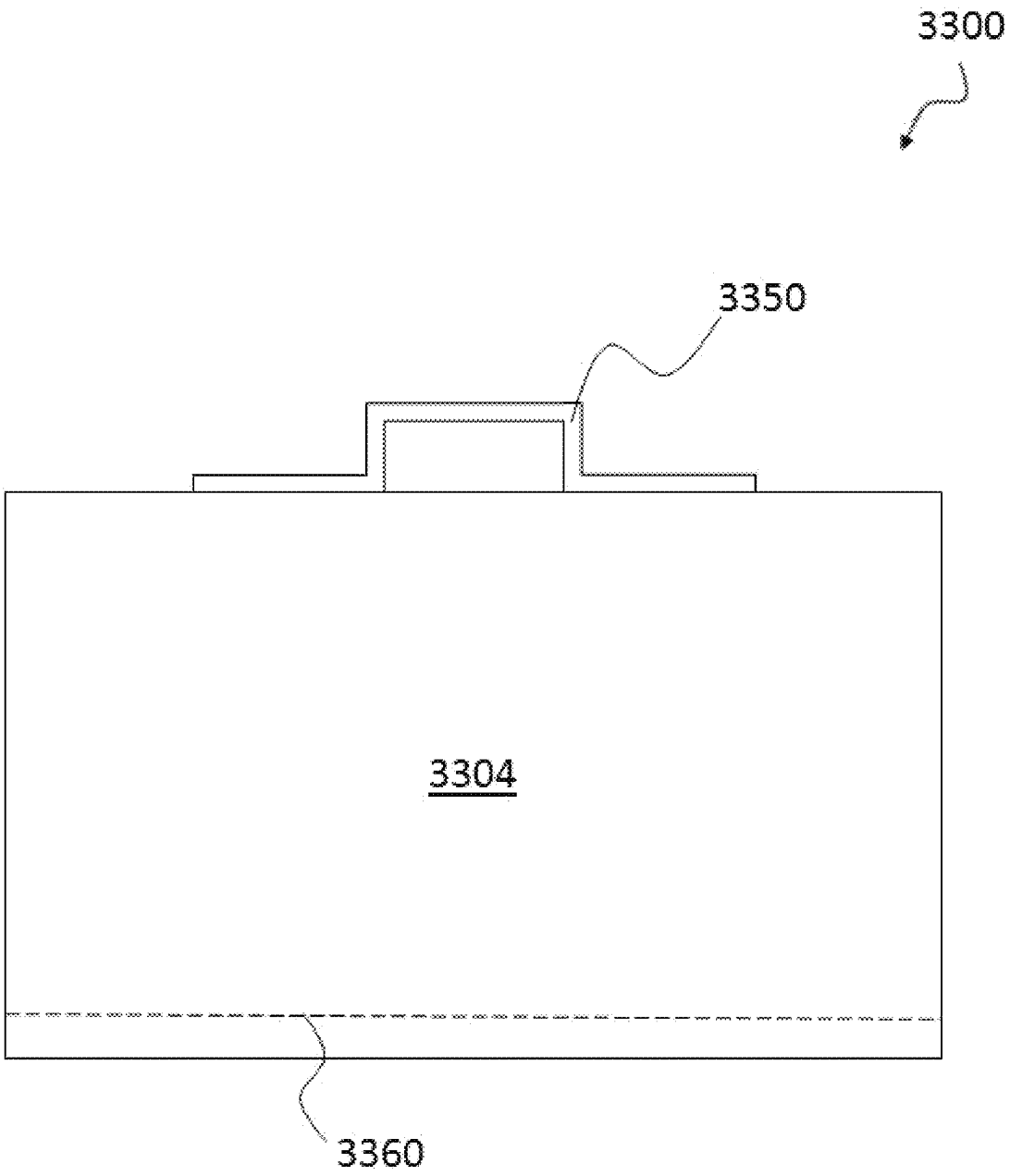

FIG. 37

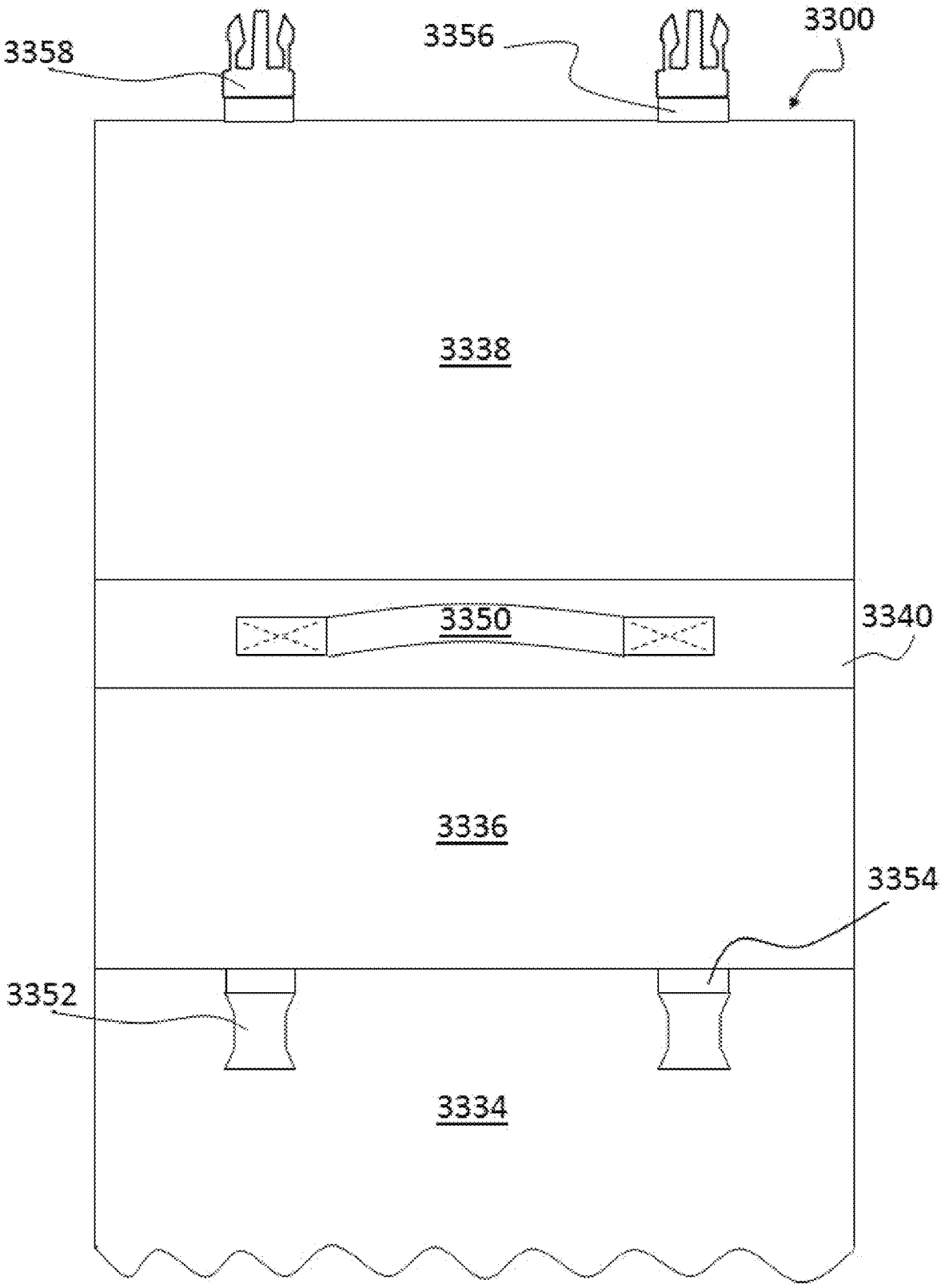

FIG. 38

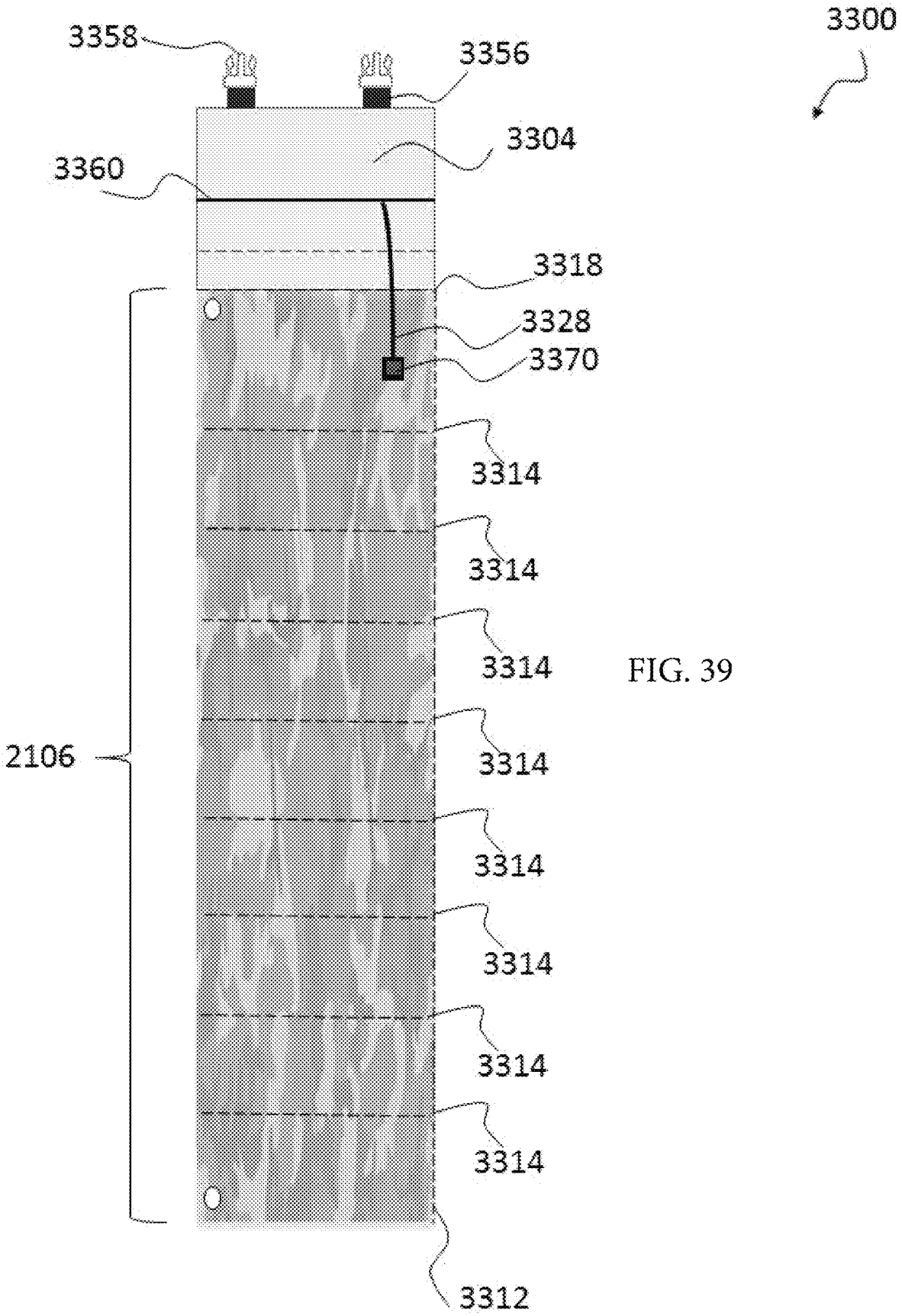
3300
3358
3356
3304
3360
3318
3328
3370
3314
3314
3314
3314
3314
3314
3314
3314
2106
3312

FIG. 39

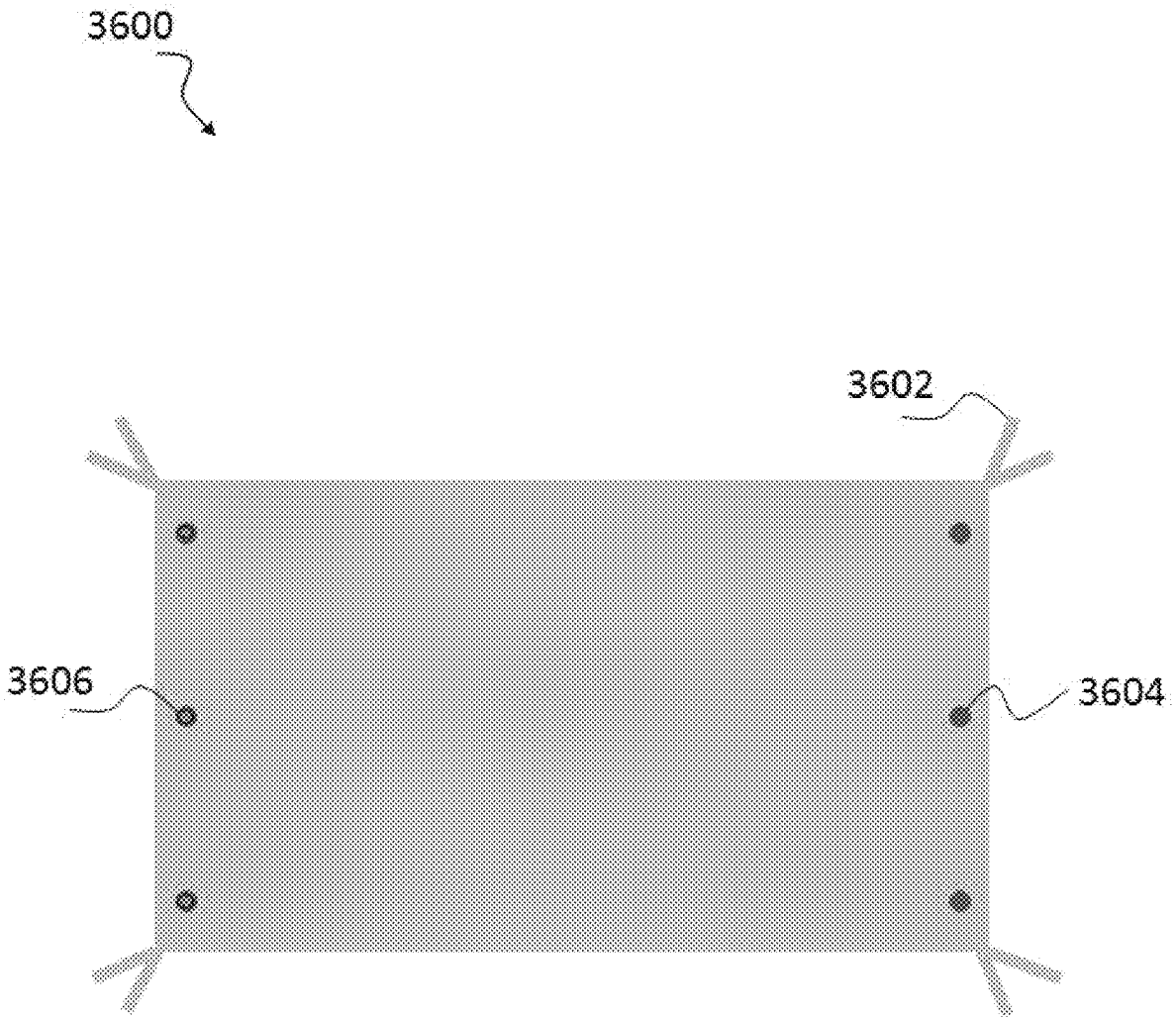

FIG. 40

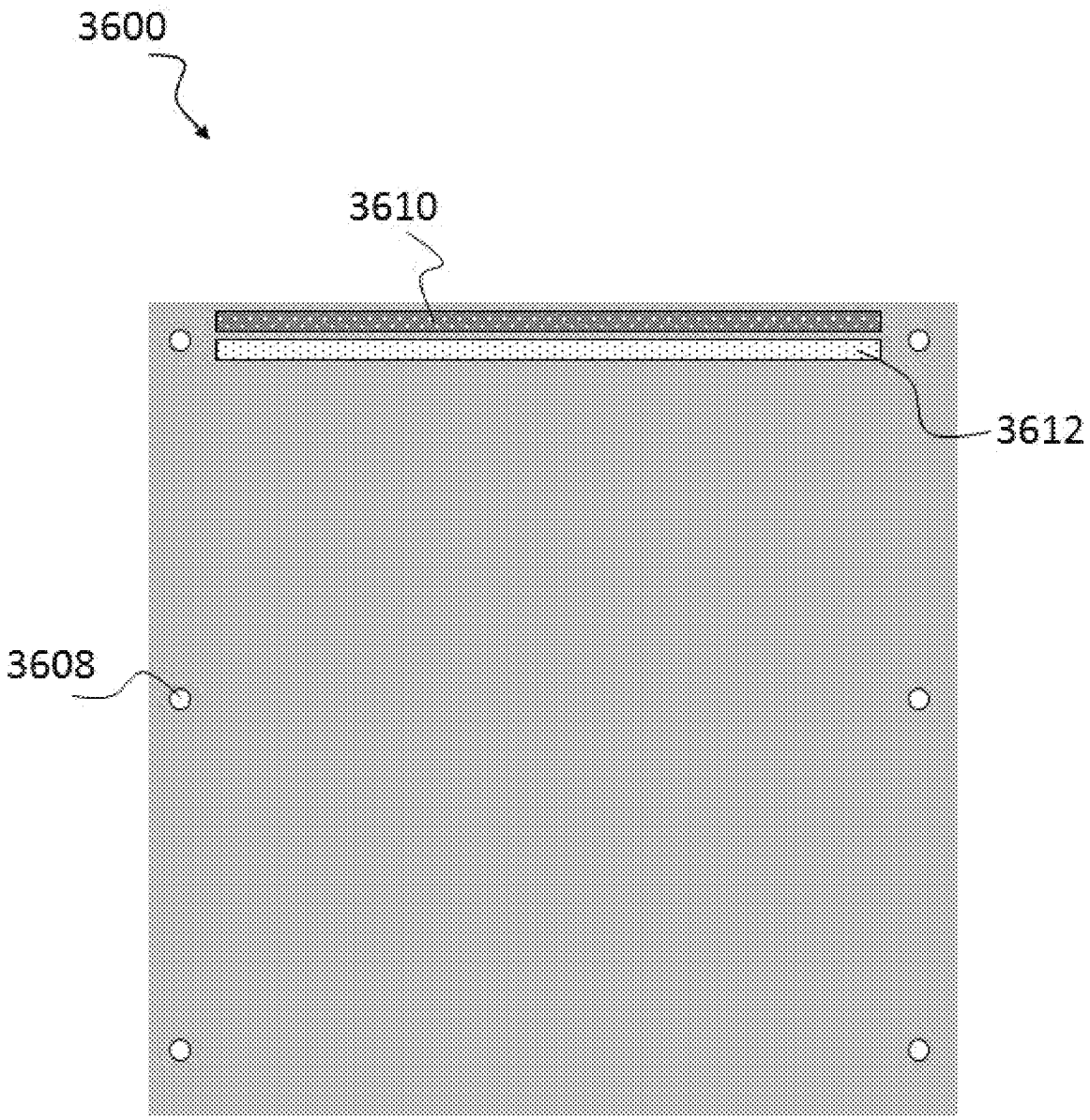

FIG. 41

PORTABLE POWER CASE WITH HEAT-RESISTANT MATERIAL

CROSS REFERENCE TO RELATED APPLICATIONS

This application is related to and claims priority from the following US patent applications: this application is a continuation of U.S. application Ser. No. 18/975,739, filed Dec. 10, 2024, which is a continuation of U.S. application Ser. No. 18/625,744, filed Apr. 3, 2024, which is continuation of U.S. application Ser. No. 17/331,155, filed May 26, 2021, which is a continuation of U.S. application Ser. No. 15/836,299, filed Dec. 8, 2017, which is a continuation-in-part of U.S. application Ser. No. 15/664,776, filed Jul. 31, 2017, and a continuation-in-part of U.S. application Ser. No. 15/720,270, filed Sep. 29, 2017. U.S. application Ser. No. 15/664,776 is a continuation-in-part of U.S. application Ser. No. 15/470,382, filed Mar. 27, 2017, which is a continuation-in-part of U.S. application Ser. No. 14/516,127, filed Oct. 16, 2014. U.S. application Ser. No. 15/720,270 is a continuation-in-part of U.S. application Ser. No. 14/520,821, filed Oct. 22, 2014, and a continuation-in-part of U.S. application Ser. No. 15/664,776, filed Jul. 31, 2017, which is a continuation-in-part of U.S. application Ser. No. 15/470,382, filed Mar. 27, 2017, which is a continuation-in-part of U.S. application Ser. No. 14/516,127, filed Oct. 16, 2014. Each of the U.S. Applications mentioned above is incorporated herein by reference in its entirety.

BACKGROUND OF THE INVENTION

1. Field of the Invention

The present invention relates generally to a portable power case comprised of at least one battery that allows the user to disassemble and selectively remove the batteries installed within the portable power case housing.

2. Description of the Prior Art

The military uses various types of portable electronic devices, such as portable battery-operated radios, which generate heat during operation, i.e., during normal operation, the devices may be heat-generating devices. In particular, a malfunctioning device can cause excessive heating. A drawback of heat-generating devices is that the heat may be transferred to the person using or carrying the device, causing uncomfortableness or burns. Another drawback of heat-generating devices is that the heat may be transferred to other devices, causing damage to these devices. Further, in military applications, heat-generating devices may increase the heat profile of military personnel, making them more prone to detection by thermal imaging and therefore more prone to danger.

It is known in the prior art to provide heat dissipating material or insulating material with heat-generating devices. It is also known in the prior art to provide a portable power supply for electronic devices, including military radios.

Representative prior art patent documents include the following:

U.S. Pat. No. 5,522,943 for portable power supply by inventors Spencer et al., filed Dec. 5, 1994 and issued Jun. 4, 1996, is directed to a portable power supply that includes at least one solar panel assembly that is capable of producing an electrical output through the conversion of solar energy to electrical energy. The power supply further includes

power transmission means which is typically an electrical cable that will supply the power output of the solar panel to an electrical energy consuming device such as a portable computer or a battery for use therewith. The portable power supply further includes a case having at least two opposing side panels and includes solar panel assembly attachment means permitting the mounting of a solar panel assembly. The solar panel assembly typically comprises a photovoltaic panel attached to a backing panel. Backing panels utilized in the solar panel assembly may also be foldable, thus protecting the attached photovoltaic panel within the folded sections of the backing panel.

U.S. Pat. No. 5,621,299 for rechargeable power supply with load voltage sensing, selectable output voltage and a wrist rest by inventor Krall, filed Nov. 14, 1994 and issued Apr. 15, 1997, is directed to a plurality of rechargeable batteries are provided as part of an electronic system that includes an electronic circuit which controls periodic charging of the batteries and allows selection of the output voltage over a given range. The system is preferably packaged in a shape to be easily integrated with a carrying case, such as a briefcase, and/or to physically match a specific type of portable equipment, such as a notebook computer. In one embodiment, the batteries and circuitry are included in a wrist rest structure of a type used with portable computer keyboards. In other forms, the power supply is useable with a large number of other specific items of portable electronic equipment, such as portable video and telecommunications equipment.

U.S. Pat. No. 7,733,658 for integrated power supply and platform for military radio by inventors Perkins et al., filed May 15, 2007 and issued Jun. 8, 2010, is directed to a power platform assembly provided to convert available AC power into power suitable to power SINCGARS radio components. The platform includes a horizontal base for supporting up to two SINCGARS radios and a carriage assembly supported above the base to provide support for up to two radio frequency power amplifiers. Connectors, internal wiring, and electrical components inside the platform provide power and electrical connections between components within and connected to the platform. Ancillary electronics and connectors provide for remote audio monitoring of communications via an LS-671 external speaker, or equivalent external speaker arrangement. The platform allows various types of available AC power, as may vary across different regions of the world, to power the radios and radio frequency power amplifiers while allowing others in a secure vicinity of the platform to hear incoming and outgoing voice transmissions without draining the batteries powering the radios.

U.S. Pat. No. 8,059,412 for integrated power supply and platform for military radio by inventors Perkins et al., filed Jan. 26, 2009 and issued November 2011, is directed to an improved power supply and platform for a military radio. The apparatus includes a base that is adapted and arranged for supporting a HARRIS 117 radio and a power amplifier adapted to amplify radio frequency output of the radio. The connectors include an electrical connector for the radio and a connector for the amplifier. A power supply is housed within the assembly. A power supply for the connector to the amplifier is also housed within the assembly. Also included is a wiring harness for a SINCGARS LS/671 device and a LED indicator to identify which radio is in operation for multiple radio configurations.

U.S. Pat. No. 8,149,592 for sealed power supply and platform for military radio by inventors Perkins et al., filed Jun. 15, 2010 and issued Apr. 3, 2012, is directed to an AC/DC power supply and platform for a military radio. The

apparatus includes a base that supports at least one SINCGARS RT-1523 radio. The base is connected to an AC power supply and at least one DC power supply. The AC supply and DC power supply are configured to switch automatically to the DC power supply should the AC power supply fail. The housing of the platform is sealed from the exterior environment with gaskets.

U.S. Pat. No. 8,462,491 for platform for military radio with vehicle adapter amplifier by inventors Perkins et al., filed Mar. 31, 2011, and issued Jun. 11, 2013, is directed to a platform for a military radio with a vehicle adapter amplifier. The apparatus includes a base for supporting at least one SINCGARS RT-1523 radio. The platform has a first power supply that includes a DC power converter for converting 110/220 alternating current into +28 Volt direct current and a second power supply that converts +28 Volt direct current into +6.75 Volts direct current, +13 Volts direct current and +200 Volt direct current. The platform includes a vehicle adapter power amplifier that provides range extension to said SINCGARS RT-1523 radio.

U.S. Pat. No. 8,531,846 for integrated AC/DC power supply and platform for military radio by inventors Perkins et al., filed Jun. 7, 2010 and issued Sep. 10, 2013, is directed to an AC/DC power supply and platform for a military radio. The apparatus includes a base that supports at least one SINCGARS RT-1523 radio. The base is connected to an AC power supply and at least one DC power supply. The AC supply and DC power supply are configured to switch automatically to the DC power supply should the AC power supply fail.

U.S. Pat. No. 8,638,011 for portable power manager operating methods by inventors Robinson et al., filed Jun. 15, 2010 and issued Jan. 28, 2014, is directed to various aspects of invention providing portable power manager operating methods. One aspect of the invention provides a method for operating a power manager having a plurality of device ports for connecting with external power devices and a power bus for connecting with each device port. The method includes: disconnecting each device port from the power bus when no external power device is connected to the device port; accessing information from newly connected external power devices; determining if the newly connected external power devices can be connected to the power bus without power conversion; if not, determining if the newly connected external power devices can be connected to the power bus over an available power converter; and if so, configuring the available power converter for suitable power conversion.

U.S. Pat. No. 8,885,354 for mount platform for multiple military radios by inventors Perkins et al., filed Mar. 15, 2013 and issued Nov. 11, 2014, is directed to a platform for a military radio with a vehicle adapter amplifier. The apparatus includes a base for supporting dual AN/VRC-110 radio systems. The platform has a first power supply that includes a DC power converter for converting 110/220 alternating current into +28 Volt direct current and a second power supply that converts +28 Volt direct current into +6.75 Volts direct current, +13 Volts direct current and +200 Volt direct current. The platform includes a vehicle adapter power amplifier that provides range extension to said dual AN/VRC-110 radio systems.

SUMMARY OF THE INVENTION

The present invention relates generally to a portable power case including at least one battery that allows the user to disassemble and selectively remove the batteries installed within the portable power case housing.

In one embodiment, the present invention provides systems, methods, and articles for a portable power case including at least one rechargeable battery and a printed circuit board (PCB) disposed within an open interior space of a hard case or housing. The hard case includes a lid and a base. The portable power case includes at least one universal serial bus (USB) port and at least two access ports, at least two leads, or at least one access port and at least one lead connected to the PCB and accessibly positioned on an exterior surface of the hard case. The at least one rechargeable battery is selectively removable from the hard case. The at least one USB port and the at least two access ports, the at least two leads, or the at least one access port and the at least one lead are operable to supply power to at least one electronic device. The at least two access ports, the at least two leads, or the at least one access port and the at least one lead are operable to charge the portable power case using at least one charging device.

In another embodiment, the present invention provides systems, methods, and articles for a portable power case including at least one rechargeable battery and a printed circuit board (PCB) disposed within an open interior space of a hard case or housing. The hard case includes a lid and a base. The portable power case includes at least two access ports, at least two leads, or at least one access port and at least one lead connected to the PCB and accessibly positioned on an exterior surface of the hard case. The at least one rechargeable battery is selectively removable from the hard case. The at least two access ports, the at least two leads, or the at least one access port and the at least one lead are operable to supply power to at least one electronic device. The at least two access ports, the at least two leads, or the at least one access port and the at least one lead are operable to charge the portable power case using at least one charging device. One of the at least one charging device is a vehicle battery. The portable power case is connected to the vehicle battery through a cable with a battery protector. The battery protector prevents the portable power case from draining the vehicle battery.

In yet another embodiment, the present invention provides systems, methods, and articles for a portable power case including at least one rechargeable battery and a printed circuit board (PCB) disposed within an open interior space of a hard case or housing. The hard case includes a lid and a base. The portable power case includes at least two access ports, at least two leads, or at least one access port and at least one lead connected to the PCB and accessibly positioned on an exterior surface of the hard case. The at least one rechargeable battery is selectively removable from the hard case. The at least two access ports, the at least two leads, or the at least one access port and the at least one lead are operable to supply power to at least one electronic device. The at least two access ports, the at least two leads, or the at least one access port and the at least one lead are operable to charge the portable power case using at least one charging device. The PCB includes control electronics configured to determine a state of charge of the portable power case and/or the at least one electronic device.

These and other aspects of the present invention will become apparent to those skilled in the art after a reading of the following description of the preferred embodiment when considered with the drawings, as they support the claimed invention.

BRIEF DESCRIPTION OF THE DRAWINGS

FIG. **1**A illustrates a cross-sectional view of one embodiment of structures that include material for dissipating heat from electronic devices and/or clothing.

FIG. **1**B illustrates a cross-sectional view of another embodiment of structures that include material for dissipating heat from electronic devices and/or clothing.

FIG. **1**C illustrates a cross-sectional view of yet another embodiment of structures that include material for dissipating heat from electronic devices and/or clothing.

FIG. **1**D illustrates a cross-sectional view of yet another embodiment of structures that include material for dissipating heat from electronic devices and/or clothing.

FIG. **2**A is a view of a radio holder article held in a pouch.

FIG. **2**B is a view of the radio holder article of FIG. **2**A removed from the pouch.

FIG. **3** is a perspective view of an example of a flexible solar panel.

FIG. **4** is an exploded view of an example of a flexible solar panel.

FIG. **5** is a perspective view of an example of a portable battery pack.

FIG. **6** is another perspective view of an example of a portable battery pack.

FIG. **7** is yet another perspective view of an example of a portable battery pack.

FIG. **8** is a perspective view of an example of a wearable pouch of a portable battery pack.

FIG. **9** is another perspective view of an example of a wearable pouch of a portable battery pack.

FIG. **10** is yet another perspective view of an example of a wearable pouch of a portable battery pack.

FIG. **11**A illustrates a front perspective view of the wearable pouch or skin of the portable battery pack.

FIG. **11**B illustrates a side perspective view of the wearable pouch or skin of the portable battery pack.

FIG. **11**C illustrates a back perspective view of the wearable pouch or skin of the portable battery pack.

FIG. **11**D illustrates a perspective view of an end of the wearable pouch or skin of the portable battery pack.

FIG. **11**E illustrates a perspective view of another end of the wearable pouch or skin of the portable battery pack.

FIG. **12**A illustrates an exploded view of an example of a battery of a portable battery pack.

FIG. **12**B illustrates an exploded view of an example of a battery of a portable battery pack into which the heat dissipating material is installed.

FIG. **13** is a perspective view of a battery of a portable battery pack.

FIG. **14** is another perspective view of a battery of a portable battery pack.

FIG. **15** illustrates an exploded view of an example of a battery into which the heat dissipating material is installed.

FIG. **16** illustrates a view of an example of a battery base.

FIG. **17** illustrates another view of an example of a battery base.

FIG. **18**A illustrates a top perspective view of the battery lid.

FIG. **18**B illustrates a cross-section view of the battery lid.

FIG. **18**C illustrates a side perspective view of the battery lid.

FIG. **18**D illustrates another cross-section view of the battery lid.

FIG. **19**A illustrates a top perspective view of the battery base.

FIG. **19**B illustrates a cross-section view of the battery base.

FIG. **19**C illustrates a detail view of a part of the cross-section view of the battery base shown in FIG. **19**B.

FIG. **19**D illustrates a side perspective view of the battery base.

FIG. **19**E illustrates another cross-section view of the battery base.

FIG. **19**F illustrates another side perspective view of the battery base.

FIG. **20** illustrates a view of a BA-5590 female connector.

FIG. **21** illustrates a block diagram of a portable power case into which the heat dissipating material is installed.

FIG. **22** illustrates a block diagram showing the inside of one embodiment of the portable power case.

FIG. **23** illustrates a block diagram of the connections to the printed circuit board (PCB).

FIG. **24** illustrates a block diagram of one embodiment of the control electronics for a state of charge indicator incorporated into the portable power case.

FIG. **25**A illustrates a block diagram of an example of an SOC system that includes a mobile application for use with a portable power case.

FIG. **25**B illustrates a block diagram of an example of control electronics of the portable power case that is capable of communicating with the SOC mobile application.

FIG. **25**C illustrates a block diagram of another example of control electronics of the portable power case that is capable of communicating with the SOC mobile application.

FIG. **26**A illustrates an angled perspective view of a rechargeable battery in a housing for mating with a PRC-117F radio.

FIG. **26**B illustrates a top view of a rechargeable battery in a housing for mating with a PRC-117F radio.

FIG. **26**C illustrates a side view of a rechargeable battery in a housing for mating with a PRC-117F radio including a connector.

FIG. **26**D illustrates another side view of a rechargeable battery in a housing for mating with a PRC-117F radio.

FIG. **27**A illustrates a view of the exterior of one embodiment of the portable power case.

FIG. **27**B illustrates a view of the exterior of another embodiment of the portable power case.

FIG. **28** illustrates a view of the portable power case showing the USB ports.

FIG. **29** illustrates one example of the portable power case lined with material resistant to heat.

FIG. **30**A illustrates one embodiment of the access ports of the portable power case.

FIG. **30**B illustrates a keyway of the access ports of the portable power case.

FIG. **30**C shows a view of one embodiment of a portable power case with leads.

FIG. **30**D shows a cutaway view of one embodiment of a portion of the portable power case showing more details of the leads.

FIG. **31** illustrates a block diagram of a portable power case in an ATV with three passengers.

FIG. **32** illustrates a block diagram of a portable power case in an ATV with four passengers.

FIG. **33**A illustrates an angled view of the housing of one embodiment of a DC-DC converter cable.

FIG. **33**B illustrates an end view of the housing of one embodiment of a DC-DC converter cable.

FIG. **33**C illustrates a side view of the housing of one embodiment of a DC-DC converter cable.

FIG. **33**D illustrates a cross-section of the housing of one embodiment of a DC-DC converter cable.

FIG. **33**E illustrates an end view of a connector end cap for the housing of one embodiment of a DC-DC converter cable.

FIG. **33**F illustrates an angled view of a connector end cap for the housing of one embodiment of a DC-DC converter cable.

FIG. **33**G illustrates an end view of a grommet end cap for the housing of one embodiment of a DC-DC converter cable.

FIG. **33**H illustrates an angled view of a grommet end cap for the housing of one embodiment of a DC-DC converter cable.

FIG. **34** illustrates a block diagram of the battery protector.

FIG. **35** illustrates a portion of a combination signal marker panel and solar panel.

FIG. **36** illustrates a front perspective view of a combination signal marker panel and solar panel while folded.

FIG. **37** illustrates a back perspective view of one embodiment of a combination signal marker panel and solar panel while folded.

FIG. **38** illustrates a top perspective view of one embodiment of the combination signal marker panel and solar panel while unfolded.

FIG. **39** illustrates another portion of a combination signal marker and solar panel.

FIG. **40** illustrates one embodiment of a signal marker panel.

FIG. **41** illustrates another embodiment of a signal marker panel.

DETAILED DESCRIPTION

The present invention is generally directed to a portable power case comprised of at least one battery that allows the user to disassemble and selectively remove the batteries installed within the portable power case housing.

In one embodiment, the present invention provides systems, methods, and articles for a portable power case including at least one rechargeable battery and a printed circuit board (PCB) disposed within an open interior space of a hard case or housing. The hard case includes a lid and a base. The portable power case includes at least one universal serial bus (USB) port and at least two access ports, at least two leads, or at least one access port and at least one lead connected to the PCB and accessibly positioned on an exterior surface of the hard case. The at least one rechargeable battery is selectively removable from the hard case. The at least one USB port and the at least two access ports, the at least two leads, or the at least one access port and the at least one lead are operable to supply power to at least one electronic device. The at least two access ports, the at least two leads, or the at least one access port and the at least one lead are operable to charge the portable power case using at least one charging device.

In another embodiment, the present invention provides systems, methods, and articles for a portable power case including at least one rechargeable battery and a printed circuit board (PCB) disposed within an open interior space of a hard case. The hard case includes a lid and a base. The portable power case includes at least two access ports, at least two leads, or at least one access port and at least one lead connected to the PCB and accessibly positioned an exterior surface of the hard case. The at least one rechargeable battery is selectively removable from the hard case. The at least two access ports, the at least two leads, or the at least one access port and the at least one lead are operable to supply power to at least one electronic device. The at least two access ports, the at least two leads, or the at least one access port and the at least one lead are operable to charge the portable power case using at least one charging device. One of the at least one charging device is a vehicle battery. The portable power case is connected to the vehicle battery through a cable with a battery protector. The battery protector prevents the portable power case from draining the vehicle battery.

In yet another embodiment, the present invention provides systems, methods, and articles for a portable power case including at least one rechargeable battery and a printed circuit board (PCB) disposed within an open interior space of a hard case. The hard case includes a lid and a base. The portable power case includes at least two access ports, at least two leads, or at least one access port and at least one lead connected to the PCB and accessibly positioned on an exterior surface of the hard case. The at least one rechargeable battery is selectively removable from the hard case. The at least two access ports, the at least two leads, or the at least one access port and the at least one lead are operable to supply power to at least one electronic device. The at least two access ports, the at least two leads, or the at least one access port and the at least one lead are operable to charge the portable power case using at least one charging device. The PCB includes control electronics configured to determine a state of charge of the portable power case and/or the at least one electronic device.

In other embodiments, the present invention provides systems, methods, and articles for a portable power case having a heat-shielding or blocking and/or heat-dissipating material layer or coating. The heat-shielding or blocking and/or heat-dissipating material is used to prevent and/or minimize heat transfer and the thermal effects produced from batteries, as well as to prevent and/or minimize heat transfer from external heat-producing articles or objects.

Team operations in remote locations, such as military operations, require radios to allow team members to communicate about danger, injuries, opportunities, etc. Without radios in these environments, more people would be injured or die. These operations also require other equipment (e.g., amplifiers, wearable batteries, mobile phones, tablets) to allow team members to communicate, survey the environment, etc. The radios and other equipment typically require lithium ion batteries. However, the lithium ion batteries may not be able to the power the radios and other equipment for the time necessary to complete the operation on a single charge. As such, a portable power supply may be required to recharge the lithium ion batteries.

Additionally, the team operation may be attacked by enemy forces, requiring the team to quickly escape. Further, shipping large lithium ion batteries or devices with lithium ion batteries is banned or highly regulated in most parts of the world due to the risk of overheating and/or fire. What is needed is a portable power case that allows a user to disassemble and selectively remove the batteries installed within the portable power case housing. As lithium ion batteries were developed in the 1970s and have been in commercial use since the 1990s, there is a long-felt unmet need for a portable power case that is operable to supply power to at least one electronic device, is operable to be charged using at least one charging device, and allows the user to disassemble and selectively remove the batteries installed within the portable power case housing.

None of the prior art provides a portable power case that is operable to supply power to at least one electronic device,

is operable to be charged using at least one charging device, and allows the user to disassemble and selectively remove the batteries installed within the portable power case housing.

Certain aspects of the presently disclosed subject matter of the invention, having been stated hereinabove, are addressed in whole or in part by the presently disclosed subject matter, and other aspects will become evident as the description proceeds when taken in connection with the accompanying illustrative examples and figures as best described herein below.

Referring now to the drawings in general, the illustrations are for the purpose of describing a preferred embodiment of the invention and are not intended to limit the invention thereto.

The present invention provides a material for 1) reducing or eliminating heat exposure from external objects or other heat-producing devices and/or 2) dissipating heat from at least one battery or heat-producing electronic device. The heat blocking or shielding and/or heat-dissipating material is incorporated into the housing of a heat-producing device or battery pack housing, or any article of clothing or fabric. In one example, a heat shielding or blocking and/or heat-dissipating material layer is sandwiched between two substrates, wherein the substrates may be flexible, rigid, or a combination of both flexible and rigid.

When applied to clothing, the heat blocking or shielding and/or heat-dissipating material is operable to protect a person's skin from burns from a heat-generating article or source. Surprisingly, one embodiment of the heat blocking or shielding and/or heat-dissipating material layer was discovered when it was in a person's hand but they were not burned by a heat gun when holding the material in hand, between the heat gun and skin. It was later tested and proved completely heat-resistant, heat-shielding, and/or heat-dissipating up to temperatures of heat guns (up to about 1,000 degrees Fahrenheit), propane torches (up to about 3,623 degrees Fahrenheit), and oxygen-fed torches (up to about 5,110 degrees Fahrenheit). These surprising test results combined with other trials generated the embodiments of the present invention and the particular examples that are described herein, in particular for linings or coatings that are constructed and configured especially for heat blocking or shielding and/or heat-dissipating material layer or coating applied to objects for protecting an article from any external heat source, as well as dissipating heat produced by heat-producing devices and their batteries.

FIG. **1**A and FIG. **1**B are cross-sectional views of examples of structures that include the material for dissipating heat from electronic devices and/or clothing. The heat-dissipating material can be used in combination with, for example, one or two substrates. For example, FIG. **1**A shows a structure **100** that includes a heat-dissipating layer **120**. The heat-dissipating layer **120** can be sandwiched between a first substrate **125** and a second substrate **130**.

The heat-dissipating layer **120** can be any material that is suitable for dissipating heat from electronic devices and/or clothing. The heat-dissipating layer **120** can be from about 20 μm thick to about 350 μm thick in one example. In particular embodiments, the heat-dissipating layer **120** can have a thickness ranging from about 1 mil to about 6 mil, including, but not limited to, 1, 2, 3, 4, 5, and 6 mil, or about 25 μm to about 150 μm, including, but not limited to, 25, 50, 75, 100, 125, and 150 μm. Examples of the heat-dissipating layer **120** include anti-static, anti-radio frequency (RF), and/or anti-electromagnetic interference (EMI) materials, such as copper shielding plastic or copper particles bonded in a polymer matrix, as well as anti-tarnish and anti-corrosion materials. A specific example of the heat-dissipating layer **120** is the anti-corrosive material used in Corrosion Intercept Pouches, catalog number 034-2024-10, available from University Products Inc. (Holyoke, Mass.). The anti-corrosive material is described in U.S. Pat. No. 4,944,916 to Franey, which is incorporated by reference herein in its entirety. Such materials can comprise copper shielded or copper impregnated polymers including, but not limited to, polyethylene, low-density polyethylene, high-density polyethylene, polypropylene, and polystyrene. In another embodiment, the heat shielding or blocking and/or heat-dissipating layer is a polymer with aluminum and/or copper particles incorporated therein. In particular, the surface area of the polymer with aluminum and/or copper particles incorporated therein preferably includes a large percent by area of copper and/or aluminum. By way of example and not limitation, the surface area of the heat-dissipating layer includes about 25% by area copper and/or aluminum, 50% by area copper and/or aluminum, 75% by area copper and/or aluminum, or 90% by area copper and/or aluminum. In one embodiment, the heat shielding or blocking and/or heat-dissipating layer is substantially smooth and not bumpy. In another embodiment, the heat shielding or blocking and/or heat-dissipating layer is not flat but includes folds and/or bumps to increase the surface area of the layer. Alternatively, the heat-shielding or blocking and/or heat-dissipating layer **120** includes a fabric having at least one metal incorporated therein or thereon. The fabric further includes a synthetic component, such as by way of example and not limitation, a nylon, a polyester, or an acetate component. Preferably, the at least one metal is selected from the group consisting of copper, nickel, aluminum, gold, silver, tin, zinc, or tungsten.

The first substrate **125** and the second substrate **130** can be any flexible or rigid substrate material. An example of a flexible substrate is any type of fabric. Examples of rigid substrates include, but are not limited to, glass, plastic, and metal. A rigid substrate may be, for example, the housing of any device. In one example, both the first substrate **125** and the second substrate **130** are flexible substrates. In another example, both the first substrate **125** and the second substrate **130** are rigid substrates. In yet another example, the first substrate **125** is a flexible substrate and the second substrate **130** is a rigid substrate. In still another example, the first substrate **125** is a rigid substrate and the second substrate **130** is a flexible substrate. Further, the first substrate **125** and the second substrate **130** can be single-layer or multi-layer structures.

In structure **100** of FIG. **1**A, the heat-shielding or blocking and/or heat-dissipating layer **120**, the first substrate **125**, and the second substrate **130** are bonded or otherwise attached together, by way of example and not limitation, by adhesive, laminating, stitching, or hook-and-loop fastener system. In another example and referring now to FIG. **1**B, in a structure **105**, the first substrate **125** is bonded to one side of the heat shielding or blocking and/or heat-dissipating layer **120**, whereas the second substrate **130** is not bonded or otherwise attached to the other side of the heat shielding or blocking and/or heat-dissipating layer **120**. In yet another example and referring now to FIG. **1**C, in a structure **110**, the first substrate **125** is provided loosely against one side of the heat shielding or blocking and/or heat-dissipating layer **120** and the second substrate **130** is provided loosely against the other side of the heat-dissipating layer **120**. The first substrate **125** and the second substrate **130** are not bonded or otherwise attached to the heat shielding or blocking and/or heat-dissipating layer **120**. In still another example and

referring now to FIG. **1**D, in a structure **115**, the heat shielding or blocking and/or heat-dissipating layer **120** is provided in combination with the first substrate **125** only, either bonded or loosely arranged. In FIG. **1**D, if the two layers are loosely arranged, the heat-dissipating layer **120** is not bonded or otherwise attached to the first substrate **125**. The presently disclosed material is not limited to the structures **100**, **105**, **110**, **115**. These structures are exemplary only.

The heat-shielding or blocking and/or heat-dissipating layer **120** can be used as a protective shield against heated objects and also for reducing the heat profile of objects. For example, in military applications, the heat shielding or blocking and/or heat-dissipating layer **120** can be used to reduce the heat profile of devices or clothing for military personnel to reduce the risk of their being detected by thermal imaging.

Other examples of applications and/or uses of the heat-shielding or blocking and/or heat-dissipating layer **120** include, but are not limited to, insulating battery packs, for example in any battery housing or electronic device housing; protecting device and/or users from undesirable external heat; forming sandwich structures; form fitting to a particular device; enclosing electronic materials to prevent corrosion or feathering; medical applications to protect patients from heated devices used in surgical procedures, for example, in robotics (e.g., for use in disposable, sterile drapes); forming solar panels; lining tents (e.g., to prevent heat from going in or out); forming heat shields or guards for mufflers on, for example, motorcycles, lawn mowers, leaf blowers, or weed eaters; lining gloves to protect from flames, handling ice, and/or for preparing food (including pastry preparation).

Other examples of protective flexible heat shielding applications in which the heat-dissipating layer **120** can be used include gloves (e.g., fire pit gloves, gloves/forearm shields for operating two-stroke engine yard equipment), integrated in uniforms (e.g., nurses/scrub technicians in operating rooms vs. electro cautery), motorcyclist (clothing) protection from tail pipes, protective shielding in radio pouches (e.g., protecting person from radio heat, protecting radio from heating battery, protecting battery from heating radio, protecting battery from external heat sources), protection on the bottom of a laptop (inside the laptop housing), protection layer from heat of laptop for laps (e.g., lap tray) and expensive furniture (e.g., furniture pad), and portable protective heat shield (e.g., protect sensitive electronics and persons, varies in sizes).

FIG. **2**A is a perspective view of a radio holder article **200** into which the heat-shielding or blocking and/or heat-dissipating layer **120** is installed. The radio holder article **200** is an example of equipment that may be used by military personnel. The radio holder article **200** is but one example of using the heat-shielding or blocking and/or heat-dissipating layer **120** for dissipating heat from an article. Military radios often get hot and can cause burns to the user.

The radio holder article **200** can be removably held in a pouch **210** and worn on a user's belt **230**. FIG. **2**B is a view of the radio holder article **200** removed from the pouch **210**. In this example, a structure, such as the structure **115** of FIG. **1**D, is formed separately and then inserted into the pouch **210** of the radio holder article **200**. In another example, in the case of the structure **105** of FIG. **1**B, the radio holder article **200** itself serves as the second substrate **130**. This allows the radio holder article **200** to be easily removed from the pouch **210**. It also provides for retrofitting the pouch with heat protection from the heat-shielding or blocking and/or heat-dissipating material layer or coating.

Alternatively, the radio holder article **200** is permanently held in the pouch **210**. The pouch **210** is formed using a structure, such as the structure **100** of FIG. **1**A. The pouch **210** includes a pouch attachment ladder system (PALS) adapted to attach the pouch to a load-bearing platform (e.g., belt, rucksack, vest). In a preferred embodiment, the pouch **210** is MOLLE-compatible. "MOLLE" means Modular Lightweight Load-carrying Equipment, which is the current generation of load-bearing equipment and backpacks utilized by a number of North Atlantic Treaty Organization (NATO) armed forces.

In this example, the heat-shielding or blocking and/or heat-dissipating layer **120** protects the user from heat from the radio (not shown), the heat shielding or blocking and/or heat-dissipating layer **120** protects the radio (not shown) from any external heat source (e.g., a hot vehicle), and the heat shielding or blocking and/or heat-dissipating layer **120** reduces the heat profile of the radio (not shown).

In a preferred embodiment, the substrate **225** can be formed of any flexible, durable, and waterproof or at least water resistant material. For example, the substrate **225** can be comprised of polyester, polyvinyl chloride (PVC)-coated polyester, vinyl-coated polyester, nylon, canvas, PVC-coated canvas, or polycotton canvas. The exterior finish of the substrate **225** can be any color, such as white, brown, or green, or any pattern, such as camouflage, as provided herein, or any other camouflage in use by the military.

Representative camouflages include, but are not limited to, universal camouflage pattern (UCP), also known as ACUPAT or ARPAT or Army Combat Uniform; MultiCam, also known as Operation Enduring Freedom Camouflage Pattern (OCP); Universal Camouflage Patter-Delta (UCP-Delta); Airman Battle Uniform (ABU); Navy Working Uniform (NWU), including variants, such as, blue-grey, desert (Type II), and woodland (Type III); MARPAT, also known as Marine Corps Combat Utility Uniform, including woodland, desert, and winter/snow variants; Disruptive Overwhite Snow digital camouflage, and Tactical Assault Camouflage (TACAM).

FIG. **3** and FIG. **4** are a perspective view and an exploded view, respectively, of a flexible solar panel article **300** into which the heat-shielding or blocking and/or heat-dissipating layer **120** is installed. The flexible solar panel article **300** is another example of equipment that may be used by military personnel. The flexible solar panel article **300** is but another example of using the heat shielding or blocking and/or heat-dissipating layer **120** for shielding or blocking external heat to and/or dissipating heat from an article.

In this example, the flexible solar panel article **300** is a flexible solar panel that can be folded up and carried in a backpack and then unfolded and deployed as needed. The flexible solar panel article **300** is used, for example, to charge rechargeable batteries or to power electronic equipment directly.

The flexible solar panel article **300** is a multilayer structure that includes multiple solar modules **322** mounted on a flexible substrate, wherein the flexible substrate with the multiple solar modules **322** is sandwiched between two layers of fabric. Windows are formed in at least one of the two layers of fabric for exposing the solar modules **322**.

A hem **324** may be provided around the perimeter of the flexible solar panel article **300**. In one example, the flexible solar panel article **300** is about 36×36 inches. The output of any arrangement of solar modules **322** in the flexible solar panel article **300** is a direct current (DC) voltage. Accord-

ingly, the flexible solar panel article **300** includes an output connector **326** that is wired to the arrangement of solar modules **322**. The output connector **326** is used for connecting any type of DC load to the flexible solar panel article **300**. In one example, the flexible solar panel article **300** is used for supplying power a device, such as a DC-powered radio. In another example, the flexible solar panel article **300** is used for charging a battery.

The flexible solar panel article **300** includes a solar panel assembly **328** that is sandwiched between a first fabric layer **330** and a second fabric layer **332**. The first fabric layer **330** and the second fabric layer **332** can be formed of any flexible, durable, and substantially waterproof or at least water resistant material, such as but not limited to, polyester, PVC-coated polyester, vinyl-coated polyester, nylon, canvas, PVC-coated canvas, and polycotton canvas. The first fabric layer **330** and the second fabric layer **332** can be any color or pattern, such as the camouflage pattern shown in FIG. **3** and FIG. **4**.

The solar panel assembly **328** of the flexible solar panel article **300** includes the multiple solar modules **322** mounted on a flexible substrate **334**. A set of windows or openings **340** is provided in the first fabric layer **330** for exposing the faces of the solar modules **322**. The flexible substrate **334** is formed of a material that is lightweight, flexible (i.e., foldable or rollable), printable, and substantially waterproof or at least water resistant.

In the flexible solar panel article **300**, the heat-dissipating layer **120** is incorporated into the layers of fabric that form the flexible solar panel article **300**, in similar fashion to the structure **100** of FIG. **1**A. Namely, the heat-dissipating layer **120** is provided at the back of solar modules **322**, between the flexible substrate **334** and the second fabric layer **332**. In this example, the first fabric layer **330**, the flexible substrate **334**, the heat-dissipating layer **120**, and the second fabric layer **332** are held together by stitching and/or by a hook-and-loop fastener system.

In this example, the heat-shielding or blocking and/or heat-dissipating layer **120** protects the user from heat from the back of the flexible solar panel article **300**, the heat-shielding or blocking and/or heat-dissipating layer **120** protects the back of the flexible solar panel article **300** from any external heat source (not shown), and the heat-dissipating layer **120** reduces the heat profile of the flexible solar panel article **300**.

FIGS. **5**-**7** are perspective views of a portable battery pack **500** into which the heat dissipating material is installed. The portable battery pack **500** is an example of equipment that may be used by military personnel. The portable battery pack **500** is but one example of using the heat-shielding or blocking and/or heat-dissipating layer **120** for dissipating heat from an article. In a preferred embodiment, the portable battery pack comprises a portable battery pack such as that disclosed in US Publication No. 20160118634 or U.S. application Ser. No. 15/720,270, each of which is incorporated herein by reference in its entirety.

Portable battery pack **500** comprises a pouch **510** for holding a battery **550**. Pouch **510** is a wearable pouch or skin that can be sized in any manner that substantially corresponds to a size of battery **550**. In one example, pouch **510** is sized to hold a battery **550** that is about 9.75 inches long, about 8.6 inches wide, and about 1 inch thick.

Pouch **510** is formed of any flexible, durable, and substantially waterproof or at least water resistant material. For example, pouch **510** can be formed of polyester, polyvinyl chloride (PVC)-coated polyester, vinyl-coated polyester, nylon, canvas, PVC-coated canvas, or polycotton canvas. The exterior finish of pouch **510** can be any color, such as white, brown, or green, or any pattern, such as camouflage, as provided herein, or any other camouflage in use by the military. For example, in FIG. **5**, FIG. **6**, and FIG. **7**, pouch **510** is shown to have a camouflage pattern.

Representative camouflages include, but are not limited to, universal camouflage pattern (UCP), also known as ACUPAT or ARPAT or Army Combat Uniform; MultiCam, also known as Operation Enduring Freedom Camouflage Pattern (OCP); Universal Camouflage Patter-Delta (UCP-Delta); Airman Battle Uniform (ABU); Navy Working Uniform (NWU), including variants, such as, blue-grey, desert (Type II), and woodland (Type III); MARPAT, also known as Marine Corps Combat Utility Uniform, including woodland, desert, and winter/snow variants; Disruptive Overwhite Snow digital camouflage, and Tactical Assault Camouflage (TACAM).

Pouch **510** has a first side **512** and a second side **514**. Pouch **510** also comprises an opening **516**, which is the opening through which battery **550** is fitted into pouch **510**. In one example, opening **516** is opened and closed using a zipper, as such pouch **510** includes a zipper tab **518**. Other mechanisms, however, can be used for holding opening **516** of pouch **510** open or closed, such as, a hook and loop system (e.g., VELCRO®), buttons, snaps, hooks, and the like. Further, an opening **520** (see FIG. **6**, FIG. **7**, FIG. **9**) is provided on the end of pouch **510** that is opposite opening **516**. For example, opening **520** can be a 0.5-inch long slit or a 0.75-inch long slit in the edge of pouch **510**.

In one embodiment, the pouch is a multi-layer structure, such as the structure **100** of FIG. **1**A, including at least one layer of the heat-dissipating layer. In this embodiment, the heat-dissipating layer is permanently attached to the pouch. Alternatively, a structure, such as the structure **115** of FIG. **1**D, is formed separately and then inserted into the pouch **510** of the portable battery pack **500**. This allows the user to retrofit an existing pouch with heat protection. The retrofit structure comprises a structure, such as the structure **115** of FIG. **1**D, for protecting the first side **512** and/or the second side **514**. The retrofit structure comprises a large structure that is operable to wrap around the battery **550** in an alternative embodiment.

In one example, battery **550** is a rechargeable battery that comprises two leads **552** (e.g., leads **552***a*, **552***b*). Each lead **552** can be used for both the charging function and the power supply function. In other words, leads **552***a*, **552***b* are not dedicated to the charging function only or the power supply function only, both leads **552***a*, **552***b* can be used for either function at any time. In one example, one lead **552** can be used for charging battery **550** while the other lead **552** can be used simultaneously for supplying power to equipment, or both leads **552** can be used for supplying power to equipment, or both leads **552** can be used for charging battery **550**. In a preferred embodiment, the leads **552** are a female circular type of connector (TAJIMI™ part number R04-P5f).

With respect to using battery **550** with pouch **510**, first the user unzips opening **516**, then the user inserts one end of battery **550** that has, for example, lead **552***b* through opening **516** and into the compartment inside pouch **510**. At the same time, the user guides the end of lead **552***b* through opening **520**, which allows the housing of battery **550** to fit entirely inside pouch **510**, as shown in FIG. **5**. Lead **552***a* is left protruding out of the unzipped opening **516**. Then the user zips opening **516** closed, leaving zipper tab **518** snugged up against lead **552***a*, as shown in FIG. **6** and FIG. **7**. Namely, FIG. **6** shows portable battery pack **500** with side **512** of

pouch **510** up, whereas FIG. **7** shows portable battery pack **500** with side **514** of pouch **510** up.

Pouch **510** of portable battery pack **500** can be MOLLE-compatible. "MOLLE" means Modular Lightweight Load-carrying Equipment, which is the current generation of load-bearing equipment and backpacks utilized by a number of NATO armed forces. Namely, pouch **510** incorporates a pouch attachment ladder system (PALS), which is a grid of webbing used to attach smaller equipment onto load-bearing platforms, such as vests and backpacks. For example, the PALS grid consists of horizontal rows of 1-inch (2.5 cm) webbing, spaced about one inch apart, and reattached to the backing at 1.5-inch (3.8 cm) intervals. Accordingly, a set of straps **522** (e.g., four straps **522**) are provided on one edge of pouch **510** as shown. Further, four rows of webbing **524** are provided on side **512** of pouch **510**, as shown in FIG. **7**. Additionally, four rows of slots or slits **526** are provided on side **514** of pouch **510**, as shown in FIG. **7**.

FIGS. **8-10** are perspective views of an example of wearable pouch **510** of the portable battery pack **500**. Namely, FIG. **8** shows details of side **512** of pouch **510** and of the edge of pouch **510** that includes opening **516**. FIG. **8** shows opening **516** in the zipper closed state. Again, four rows of webbing **524** are provided on side **512** of pouch **510**. FIG. **9** also shows details of side **512** of pouch **510**, but showing the edge of pouch **510** that includes opening **520**. FIG. **10** shows details of side **514** of pouch **510** and shows the edge of pouch **510** that includes opening **516**. FIG. **10** shows opening **516** in the zipped closed state. Again, four rows of slots or slits **526** are provided on side **514** of pouch **510**.

FIGS. **11**A-**11**E illustrate various other views of wearable pouch **110** of the portable battery pack **100**. FIG. **11**A shows a view (i.e., "PLAN-A") of side **112** of pouch **110**. FIG. **11**B shows a side view of pouch **110**. FIG. **11**C shows a view (i.e., "PLAN-B") of side **114** of pouch **110**. FIG. **11**D shows an end view (i.e., "END-A") of the non-strap end of pouch **110**. FIG. **11**E shows an end view (i.e., "END-B") of the strap **112**-end of pouch **110**.

FIG. **12**A is an exploded view of an example of battery **550** of the portable battery pack **500**. Battery **550** includes a battery element **564** that is housed between a battery cover **554** and a back plate **562**. Battery element **564** supplies leads **552***a*, **552***b*. In one example, the output of battery element **564** can be from about 5 volts DC to about 90 volts DC at from about 0.25 amps to about 10 amps.

FIG. **12**B illustrates an exploded view of an example of a battery **550** of the portable battery pack **500** into which the heat dissipating material is installed. Battery **550** includes a battery element **564** that is housed between a battery cover **554** and a back plate **562**. A first heat-dissipating layer **570** is between the battery cover **554** and the battery element **564**. The first heat-dissipating layer **570** protects the battery from external heat sources (e.g., a hot vehicle). A second heat-dissipating layer **572** is between the battery element **564** and the back plate **562**. The second heat-dissipating layer **572** protects the user from heat given off by the battery element **564**.

Battery cover **554** comprises a substantially rectangular compartment **556** that is sized to receive battery element **564**. A top hat style rim **558** is provided around the perimeter of compartment **556**. Additionally, two channels **560** (e.g., channels **560***a*, **560***b*) are formed in battery cover **554** (one on each side) to accommodate the wires of leads **552***a*, **552***b* passing therethrough.

The leads **552** are preferably flexible and omnidirectional. Each lead **552** includes a connector portion and a wiring portion. The connector portion can be any type or style of connector needed to mate to the equipment to be used with battery **550** of portable battery pack **500**. The wiring portion is electrically connected to the battery element **564**.

The wiring portion is fitted into a channel **560** formed in battery cover **554** such that the connector portion extends away from battery cover **554**. A spring is provided around the wiring portion, such that a portion of the spring is inside battery cover **554** and a portion of the spring is outside battery cover **554**. In one example, the spring is a steel spring that is from about 0.25 inches to about 1.5 inches long. The wiring portion of lead **552** and the spring are held securely in the channel **560** of the battery cover **554** via a clamping mechanism.

The presence of the spring around the wiring portion of lead **552** allows lead **552** to be flexed in any direction for convenient connection to equipment from any angle. The presence of the spring around the wiring portion of lead **552** also allows lead **552** to be flexed repeatedly without breaking and failing. The design of leads **552** provides benefit over conventional leads and/or connectors of portable battery packs that are rigid, wherein conventional rigid leads allow connection from one angle only and are prone to breakage if bumped.

Battery cover **554** and back plate **562** can be formed of plastic using, for example, a thermoform process or an injection molding. Back plate **562** can be mechanically attached to rim **558** of battery cover **554** via, for example, an ultrasonic spot welding process or an adhesive. Additionally, a water barrier material, such as silicone, may be applied to the mating surfaces of rim **558** and back plate **562**. Battery cover **554**, back plate **562**, and battery element **564** can have a slight curvature or contour for conforming to, for example, the user's vest, backpack, or body armor. In one example, the outward curve of body armor was reverse engineered so that the portable battery pack matches the curvature of the load bearing equipment. Advantageously, this means that the portable battery pack does not jostle as the operator moves, which results in less energy expenditure when the operator moves.

FIG. **13** and FIG. **14** are perspective views of battery **550** of the portable battery pack **500** when fully assembled. Namely, FIG. **13** show a view of the battery cover **554**-side of battery **550**, while FIG. **14** shows a view of the back plate **562**-side of battery **550**.

FIG. **15** illustrates an exploded view of an example of a housing of a battery **1500** into which the heat-shielding or blocking and/or heat-dissipating material is provided as a coating or layer. The battery **1500** is an example of equipment that may be used by military personnel. The battery **1500** is but one example of using the heat-shielding or blocking, heat-dissipating layer **120** for dissipating heat from an article.

The battery **1500** includes a lid **1502** and a base **1504**. The base **1504** has a mounting plaque **1510** for mounting a latch on the base. The base **1504** has a recessed hole **1508** for a connector on both sides of the base **1504**. The lid **1502** includes holes **1512** to attach the lid to the base **1504**. The base **1504** includes holes **1514** to attach the lid to the base of the housing. Screws (not shown) are placed through holes **1512** and **1514** to attach the lid to the base. The lid **1502** includes a hole **1516** for mounting a connector.

In one embodiment, the battery housing or base **1504** with sides depending upwards therefrom is a unitary and integrally formed piece of plastic formed via injection molding. Advantageously, when the heat-shielding or blocking and/or heat-dissipating material is utilized in conjunction with the

base, the base can be manufactured from much thinner plastic than in prior art battery housings because the heat-shielding or blocking and/or heat-dissipating material effectively blocks, shields from, and dissipates heat. In contrast, prior art plastic battery housings require thicker plastic to provide heat blocking, shielding, and dissipation. When used in conjunction with the heat-shielding or blocking and/or heat-dissipating material, the thin plastic material requirement of the present invention provides for cost and/or weight savings over the prior art. In fact, some embodiments of the housing of the present invention use materials and types of materials which traditionally have been disfavored because of the heat generated from battery cells. Such materials include by way of example not limitation, aluminum, titanium, nickel, magnesium, microlattice metals, composite metal foams, and combinations thereof. Notably, many of these materials were previously disfavored for the base because of the heat transfer and dissipation from the battery cells. Materials which provide other advantages such as bullet resistance, such as composite metal foams, are also used for the base in one embodiment of the present invention.

The battery housing or base **1504** for removably holding at least one battery cell is coated with a paint **1506** for reducing electromagnetic interference. In a preferred embodiment, the paint **1506** includes copper. Although the base **1504** of the battery **1500** is coated with the paint **1506**, which functionally protects the bottom and sides of the battery from external heat, the top of the battery is exposed to external heat when attached to heat generating equipment (e.g., radio). Since external heat can damage the battery and/or cause it to overheat, the heat-shielding or blocking and/or heat-dissipating material layer or coating is functionally constructed and configured within the interior of the housing or base to protect the removable battery cells disposed therein. In this particular example, the radio in constant use generates a significant heat profile and the heat-shielding material is operable to block that external heat emanating from the radio. The material is further functional to dissipate heat generated by the at least one battery during operation of the radio, which draws power from the at least one battery, and reduces the heat profile of the at least one battery cell disposed within the housing or base. Reducing the exposure of the battery cells to heat results in longer and more reliable battery performance.

In another example of embodiments of the present invention, the heat-shielding or blocking and/or heat-dissipating material completely covers the interior of a housing having a plurality of battery cells removably disposed therein. Other examples include a heat-shielding or blocking and/or heat-dissipating material layer having anti-static, anti-radio frequency (RF), anti-electromagnetic interference (EMI), anti-tarnish, and/or anti-corrosion materials and properties that effectively protect battery-operated devices and/or the batteries that power them from damage or diminished operation.

The battery housing or base **1504** includes a plurality of sealed battery cells or individually contained battery cells, i.e. batteries with their own casings, removably disposed therein. In a preferred embodiment, the battery cells are electrochemical battery cells, and more preferably, include lithium ion rechargeable batteries. In one embodiment, the battery cells are lithium ferrous phosphate or all-solid-state cells (e.g., using glass electrolytes and alkaline metal anodes). In one embodiment, the battery cells are 18350, 14430, 14500, 18500, 16650, 18650, 21700, or 26650 cylindrical cells. The plurality of battery cells may be constructed and configured in parallel, series, or a combination. Preferably, the plurality of battery cells is removably disposed within the base or battery housing or container. For example, the plurality of battery cells can be replaced if they no longer hold a sufficient charge.

In an alternative embodiment, one or more of the plurality of battery cells is sealed within the base. In another embodiment, the lid **1502** is permanently secured to the base **1504**.

FIG. **16** illustrates a view of an example of a battery base **1504**. The base **1504** is shown with a latch **1520**. The latch **1520** is operable to attach the battery **1500** to a military radio (e.g., AN/PRC-117G) with a corresponding catch. A dust cap **1518** is attached to the battery base **1504** via a lanyard **1522** attached to the mounting plaque of the latch. The length of the lanyard **1522** is such that no part of the dust cap **1518** is capable of moving underneath the battery **1500**. Batteries often have the dust cap attached to the housing via a dress nut, which allows the dust cap to move underneath the battery. When the dust cap is underneath the battery, the battery (and any equipment attached to the battery) may become unstable and tip over. If the dust cap is underneath the battery, it may lead to the dust cap being torn from the housing. The battery connector would no longer be protected from dust and other environmental contaminants, causing battery failure in the field.

FIG. **17** illustrates another view of an example of a battery base **1504**. In a preferred embodiment, the recessed hole **1508** includes a flat side **1530** for installing a connector with a keyway. A right-angle cable is used to connect the battery to external power consuming devices and/or external power sources. The keyway ensures that the right-angle cable does not interfere with latches used to attach the battery to the radio. The keyway in FIG. **17** forces the cable to a 30.0° angle. In another embodiment, the keyway forces the cable at an angle between 5° and 15° away from the latch. Other angles are compatible with the present invention.

FIGS. **18**A-D illustrate various other views of the lid.

FIGS. **19**A-F illustrate various other views of the base.

FIG. **20** illustrates a view of a BA-5590 female connector. In a preferred embodiment, the BA-5590 female connector is installed in the hole **1516** of the lid. The base of the connector in FIG. **20** is 0.25 inches shorter than other similar female connectors, which results in less wasted space inside the battery housing. The shorter connector allows the base to be 0.25 inches shorter, which results in cost, weight, and volume savings over the prior art.

FIG. **21** illustrates a block diagram of one embodiment of a portable power case into which the heat dissipating material is installed. The portable power case **2100** is an example of equipment that may be used by military personnel. The portable power case **2100** is but one example of using the heat-shielding or blocking and/or heat-dissipating layer **120** for dissipating heat from and/or reducing the thermal effects of an article.

The portable power case has at least two access ports, at least two leads, or at least one access port and the at least one lead accessibly positioned on the exterior surface of the hard case. The portable power case **2100** in FIG. **21** has four access ports **2120**A-**2120**D and two USB ports **2122**A-**2122**B. The portable power case **2100** is operable to connect to an amplifier **2104** through an access port (e.g., **2120**A). The amplifier **2104** connects to a radio **2102**. The portable power case **2100** is operable to be charged using a solar panel **2106** when connected to an access port (e.g., **2120**B). The portable power case **2100** is operable to charge a wearable battery **2108**. The portable power case **2100** and the wearable battery **2108** are connected through a DC-DC

converter cable **2110** that is in contact with an access port (e.g., **2120**C). The portable power case **2100** is operable to be charged using a vehicle battery **2112**. The vehicle battery **2112** is operable to charge the portable power case **2100** for a brief period after the ignition of the vehicle is turned off. The system includes a battery protector **2114** connected to an access port (e.g., **2120**D) to prevent the vehicle battery from being drained. The battery protector **2114** is connected to the access port **2120**D through a DC-DC converter cable **2116**. The USB ports **2122**A-**2122**B are operable to charge electronic devices, including, but not limited to, a mobile phone **2130** and/or a tablet **2132**.

In a preferred embodiment, the amplifier is a 50 W wideband vehicular amplifier adapter (e.g., RF-7800UL-V150 by Harris Corporation) or a power amplifier for the Falcon III VHF handheld radio (e.g., RF-7800V-V50x by Harris Corporation). In a preferred embodiment, the radio is a PRC-117G. In an alternative embodiment, the radio is a Link 16 radio (e.g., BATS-D AN/PRC-161 Handheld Link 16 Radio). Alternative radios and/or amplifiers are compatible with the present invention.

The portable power case includes at least one battery that is selectively removable from the portable power case. In a preferred embodiment, the at least one battery is in a housing for mating with a military radio (e.g., PRC-117G, PRC-117F). Alternatively, one or more of the at least one battery is a wearable battery. The batteries in the portable power case housing can be split apart amongst members of a team for transport to a location. This is advantageous in that it allows a large quantity of lithium ion batteries to arrive by air that otherwise could not be transported due to regulations. Team members can also use a single battery for a single military radio should rapid egress become necessary. This allows for maintaining communication even though the larger case and amplifier are abandoned. Further, the cables that attach to the outside of the portable power case are compatible with the batteries inside the portable power case, such that a second set of cables is not needed to power equipment if the batteries are removed from the portable power case. Additionally, if the portable power case is damaged in a combat related incident (e.g., damaged by an improvised explosive device or gunfire), the individual batteries could still work and provide power on their own.

In an alternative embodiment, one or more of the at least one battery does not have a housing for the plurality of battery cells, which reduces the weight and dimensions of the portable power case **2100**. Soldiers often carry 60-100 lbs. of gear in their rucksack or attached to their vest. Additional weight slows soldiers down and also makes it more likely that they will suffer injuries to their body (e.g., injuries to the back, shoulders, hips, knees, ankles, and feet). Advantageously, removing the housing for one or more of the at least one battery allows the portable power case to be sized to fit in a rucksack. In one embodiment, the one or more of the at least one battery without a housing is sealed within the portable power case to prevent a user from tampering with the plurality of battery cells. In another embodiment, the battery cells are sealed in flashspun high-density polyethylene (e.g., DUPONT™ TYVEK®), heat shrink tubing, or polyimide film (e.g., DUPONT™ KAPTON®). In yet another embodiment, one or more of the at least one battery is made of at least one pouch cell. Pouch cells provide efficient use of space and lighter weight, but may result in a reduction of run time.

FIG. **22** illustrates a block diagram showing the inside of one embodiment of the portable power case **2100**. The portable power case **2100** includes two batteries **2202**A-**2202**B and three batteries **2204**A-**2204**C disposed within an open interior space of the hard case. In a preferred embodiment, the batteries **2202**A-**2202**B are 29.4V lithium ion rechargeable batteries in a housing for mating with a PRC-117G radio. In a preferred embodiment, the batteries **2204**A-**2204**C are 29.4V lithium ion rechargeable batteries in a housing for mating with a PRC-117F radio. Alternative voltages, housings, and/or number of batteries are compatible with the present invention. The batteries **2202**A-**2202**B and **2204**A-**2204**C are removably connected to a PCB **2206** by a harness. The harness consists of cables with connectors that allow the batteries **2202**A-**2202**B and **2204**A-**2204**C to easily connect to the PCB **2206** by simply pushing a connector into a corresponding battery. The harness reduces the complexity of electrically connecting the batteries and the PCB. The harness preferably uses slip away connectors that allow for the quick insert and quick release when multiple batteries are put in parallel. In one embodiment, the slip away connectors are based on a FISCHER® 105 A87 connector. In a preferred embodiment, the batteries **2202**A-**2202**B and **2204**A-**2204**C include a heat-dissipating layer between the lid and the plurality of electrochemical battery cells.

In an alternative embodiment, the portable power case **2100** has connectors for the at least one battery hard mounted to the base of the hard case. This allows the at least one battery to mate on top of the hard-mounted connectors and reduces the cables within the case.

The PCB **2206** is disposed within an open interior space of the hard case. The PCB **2206** is preferably mounted in the base of the portable power case **2100**. In a preferred embodiment, the PCB **2206** is secured to the base of the portable power case **2100** via posts that float the PCB **2206** above the bottom of the hard case. The PCB **2206** is preferably protected from the at least one battery by foam. In one embodiment, the foam is a polyethylene foam (e.g., ETHAFOAM®).

FIG. **23** illustrates a block diagram of the connections to the PCB in a preferred embodiment. The PCB **2206** has four inputs. Batteries **2202**A and **2202**B are in parallel with each other and connected to the PCB at INPUT 1. Battery **2204**A is connected to the PCB at INPUT 2. Battery **2204**B is connected to the PCB at INPUT 3. Battery **2204**C is connected to the PCB at INPUT 4. The four inputs are in parallel with each other. In a preferred embodiment, a capacitor is installed between each of the batteries in parallel to reduce the risk of shorting the connectors. The PCB **2206** has five outputs. OUTPUT 1 powers access port **2120**A, OUTPUT 2 powers access port **2120**B, OUTPUT 3 powers access port **2120**C, OUTPUT 4 powers access port **2120**D, and OUTPUT USB powers USB ports **2122**A and **2122**B. In a preferred embodiment, access ports **2120**A-**2120**D have the same output voltage.

In an alternative embodiment, access ports **2120**A-**2120**D include at least two different output voltages. The PCB includes at least one voltage converter for achieving the at least two different output voltages. In one example, an access port has an output voltage equivalent to the input voltage of the at least one battery (e.g., 29.4V) and a second access port has a lower output voltage (e.g., 16.8V). The PCB includes a voltage converter to convert the input voltage of the at least one battery to the lower output voltage of the second access port.

The PCB does not use ferrite beads to reduce noise in one embodiment. In a first trial, ferrite beads were installed and the connectors failed. In a second trial, two ferrite beads were installed in parallel and the connectors failed. The

connectors worked after the ferrite beads were removed. The ferrite beads did not have sufficient current capability. The PCB uses capacitors to protect the batteries in another embodiment.

In one embodiment, the PCB includes at least one processor. By way of example, and not limitation, the processor may be a general-purpose microprocessor (e.g., a central processing unit (CPU)), a graphics processing unit (GPU), a microcontroller, a Digital Signal Processor (DSP), an Application Specific Integrated Circuit (ASIC), a Field Programmable Gate Array (FPGA), a Programmable Logic Device (PLD), a controller, a state machine, gated or transistor logic, discrete hardware components, or any other suitable entity or combinations thereof that can perform calculations, process instructions for execution, and/or other manipulations of information.

One or more of the at least one processor is incorporated into control electronics used to determine the state of charge (SOC) of the portable power case in one embodiment. Examples of state of charge indicators are disclosed in US Publication Nos. 20170269162 and 20150198670, each of which is incorporated herein by reference in its entirety.

FIG. **24** illustrates a block diagram of one embodiment of the control electronics for a state of charge indicator incorporated into the portable power case. In this example, the control electronics **2430** includes a voltage sensing circuit **2432**, an analog-to-digital converter (ADC) **2434**, a processor **2436**, the indicator **2440**, and optionally a driver **2442**.

The voltage sensing circuit **2432** can be any standard voltage sensing circuit, such as those found in volt meters. An input voltage VIN is supplied via the power BUS. In one embodiment, the voltage sensing circuit **2432** is designed to sense any direct current (DC) voltage in the range of from about 0 volts DC to about 50 volts DC. In one embodiment, the voltage sensing circuit **2432** includes standard amplification or de-amplification functions for generating an analog voltage that correlates to the amplitude of the input voltage VIN that is present. The ADC **2434** receives the analog voltage from the voltage sensing circuit **2432** and performs a standard analog-to-digital conversion.

The processor **2436** manages the overall operations of the SOC indicator. The processor **2436** is any controller, microcontroller, or microprocessor that is capable of processing program instructions.

The indicator **2440** is any visual, audible, or tactile mechanism for indicating the state of charge of the portable power case. A preferred embodiment of a visual indicator is at least one 5-bar liquid crystal display (LCD), wherein five bars flashing or five bars indicates greatest charge and one bar or one bar flashing indicates least charge. Another example of a visual indicator is at least one seven-segment numeric LCD, wherein the number 5 flashing or the number 5 indicates greatest charge and the number 1 or the number 1 flashing indicates least charge. Alternatively, the at least one LCD displays the voltage of the portable power case as measured by the control electronics.

The at least one LCD is preferably covered with a transparent material. In a preferred embodiment, the cover is formed of a clear plastic (e.g., poly(methyl methacrylate)). This provides an extra layer of protection for the at least one LCD, much like a screen protector provides an extra layer of protection for a smartphone. This increases the durability of the at least one LCD. The portable power case includes a waterproof sealant (e.g., silicone) around the cover.

Alternatively, a visual indicator is at least one LED. One preferred embodiment of a visual indicator is a set of light-emitting diodes (LEDs) (e.g., 5 LEDs), wherein five lit LEDs flashing or five lit LEDs indicates greatest charge and one lit LED or one lit LED flashing indicates least charge. In one embodiment, the LEDs are red, yellow, and/or green. In one example, two of the LEDs are green to indicate a mostly full charge on the portable power case, two of the LEDs are yellow to indicate that charging will soon be required for the portable power case, and one LED is red to indicate that the portable power case is almost drained. In a preferred embodiment, at least three bars, lights, or numbers are used to indicate the state of charge.

In one embodiment, the at least one LED is preferably covered with a transparent material. In a preferred embodiment, the cover is formed of a clear plastic (e.g., poly(methyl methacrylate)). This provides an extra layer of protection for the at least one LED. This increases the durability of the at least one LED. The portable power case includes a waterproof sealant (e.g., silicone) around the cover.

One example of an audible indicator is any sounds via an audio speaker, such as beeping sounds, wherein five beeps indicates greatest charge and one beep indicates least charge. Another example of an audible indicator is vibration sounds via any vibration mechanism (e.g., vibration motor used in mobile phones), wherein five vibration sounds indicates greatest charge and one vibration sound indicates least charge.

One example of a tactile indicator is any vibration mechanism (e.g., vibration motor used in mobile phones), wherein five vibrations indicate greatest charge and one vibration indicate least charge. Another example of a tactile indicator is a set of pins that rise up and down to be felt in Braille-like fashion, wherein five raised pins indicates greatest charge and one raised pin indicates least charge.

In one example, the processor **2436** is able to drive indicator **2440** directly. In one embodiment, the processor **2436** is able to drive directly a 5-bar LCD or a seven-segment numeric LCD. In another example, however, the processor **2436** is not able to drive indicator **2440** directly. In this case, the driver **2442** is provided, wherein the driver **2442** is specific to the type of indicator **2440** used in the control electronics **2430**.

Additionally, the processor **2436** includes internal programmable functions for programming the expected range of the input voltage VIN and the correlation of the value the input voltage VIN to what is indicated at the indicator **2440**. In other words, the discharge curve of the portable power case can be correlated to what is indicated at indicator **2440**. In one embodiment, the processor **2436** is programmed based on a percent discharged or on an absolute value present at the input voltage VIN.

In one embodiment, the PCB includes at least one antenna, which allows the portable power case to send information (e.g., state of charge information) to at least one remote device (e.g., smartphone, tablet, laptop computer, satellite phone) and/or receive information (e.g., software updates, activation of kill switch) from at least one remote device. The at least one antenna provides wireless communication, standards-based or non-standards-based, by way of example and not limitation, radiofrequency, BLUETOOTH®, ZIGBEE®, Near Field Communication, or similar commercially used standards.

FIG. **25**A illustrates a block diagram of an example of an SOC system **2520** that includes a mobile application for use with a portable power case. The SOC system **2520** includes a portable power case **2100** having a communications interface **2510**.

The communications interface **2510** is any wired and/or wireless communication interface for connecting to a net-

work and by which information may be exchanged with other devices connected to the network. Examples of wired communication interfaces include, but are not limited to, USB ports, RS232 connectors, RJ45 connectors, Ethernet, and any combinations thereof. Examples of wireless communication interfaces include, but are not limited to, an Intranet connection, Internet, ISM, BLUETOOTH® technology, WI-FI®, WIMAX®, IEEE 802.11 technology, radio frequency (RF), Near Field Communication (NFC), ZIGBEE®, Infrared Data Association (IrDA) compatible protocols, Local Area Networks (LAN), Wide Area Networks (WAN), Shared Wireless Access Protocol (SWAP), any combinations thereof, and other types of wireless networking protocols.

The communications interface **2510** is used to communicate, preferably wirelessly, with at least one remote device, such as but not limited to, a mobile phone **2130** or a tablet **2132**. The mobile phone **2130** can be any mobile phone that (1) is capable of running mobile applications and (2) is capable of communicating with the portable power case. The mobile phone **2130** can be, for example, an ANDROID™ phone, an APPLE® IPHONE®, or a SAMSUNG® GALAXY® phone. Likewise, the tablet **2132** can be any tablet that (1) is capable of running mobile applications and (2) is capable of communicating with the portable power case. The tablet **2132** can be, for example, the 3G or 4G version of the APPLE® IPAD®.

Further, in SOC system **2500**, the mobile phone **2130** and/or the tablet **2132** is in communication with a cellular network **2516** and/or a network **2514**. The network **2514** can be any network for providing wired or wireless connection to the Internet, such as a local area network (LAN) or a wide area network (WAN).

An SOC mobile application **2512** is installed and running at the mobile phone **2130** and/or the tablet **2132**. The SOC mobile application **2512** is implemented according to the type (i.e., the operating system) of mobile phone **2130** and/or tablet **2132** on which it is running. The SOC mobile application **2512** is designed to receive SOC information from the portable power case. The SOC mobile application **2512** indicates graphically, audibly, and/or tactilely, the state of charge to the user (not shown).

FIG. **25**B illustrates a block diagram of an example of SOC system **2520** of the portable power case that is capable of communicating with the SOC mobile application **2512**. In this example, the SOC system **2520** includes an SOC portion **2522** and a communications portion **2524**. The SOC portion **2522** is substantially the same as the control electronics **2430** shown in FIG. **24**. The communications portion **2524** handles the communication of the SOC information to the SOC mobile application **2512** at, for example, the mobile phone **2130** and/or the tablet **2132**.

The communications portion **2524** includes a processor **2526** that is communicatively connected to the communications interface **2510**. The digital output of the ADC **2434** of the SOC portion **2522**, which is the SOC information, feeds an input to the processor **2526**. The processor **2526** can be any controller, microcontroller, or microprocessor that is capable of processing program instructions. One or more batteries **2528** provide power to the processor **2526** and the communications interface **2510**. The one or more batteries **2528** can be any standard cylindrical battery, such as quadruple-A, triple-A, or double-A, or a battery from the family of button cell and coin cell batteries. A specific example of a battery **2528** is the CR2032 coin cell 3-volt battery.

In SOC system **2520**, the SOC portion **2522** and the communications portion **2524** operate substantially independent of one another. Namely, the communications portion **2524** is powered separately from the SOC portion **2522** so that the communications portion **2524** is not dependent on the presence of the input voltage VIN at the SOC portion **2522** for power. Therefore, in this example, the communications portion **2524** is operable to transmit information to the SOC mobile application **2512** at any time. However, in order to conserve battery life, in one embodiment the processor **2526** is programmed to be in sleep mode when no voltage is detected at the input voltage VIN at the SOC portion **2522** and to wake up when an input voltage VIN is detected. Alternatively, the processor **2526** is programmed to periodically measure the SOC and send SOC information to the SOC mobile application **2512** on the at least one remote device periodically, such as every hour, regardless of the state of input voltage VIN.

FIG. **25**C illustrates a block diagram of another example of control electronics **2530** of the portable power case that is capable of communicating with the SOC mobile application **2512**. In this example, the operation of the communications interface **2510** is dependent on the presence of a voltage at input voltage VIN. This is because, in control electronics **2530**, the communications interface **2510** is powered from the output of voltage sensing circuit **2432**. Further, the processor **2436** provides the input (i.e., the SOC information) to the communications interface **2510**. A drawback of the control electronics **2530** of FIG. **25**C as compared with the SOC system **2520** of FIG. **25**B, is that it is operable to transmit SOC information to the SOC mobile application **2512** only when the portable power case has a charge.

In one embodiment, the portable power case includes a kill switch to deactivate the portable power case. For example, if a team of soldiers came under attack, the batteries within the portable power case housing could be removed and the kill switch activated to render the portable power case inoperable. A kill switch could also be used to render the portable power case inoperable at a designated expiration date for safety purposes.

In another embodiment, the PCB includes a global positioning system (GPS) chip. The GPS chip allows the portable power case to be located from a remote location. In one example, the GPS chip allows a search and rescue team to locate hikers or campers lost in the woods. The GPS chip also allows for the remote activation of a kill switch from anywhere in the world. For example, if the team of soldiers came under attack and removed the batteries within the portable power case housing, command could then remotely activate the kill switch to render the portable power case inoperable.

In a preferred embodiment, the batteries **2202**A-**2202**B are 29.4V lithium ion rechargeable batteries in a housing for mating with a PRC-117G radio. FIG. **18**A illustrates a top perspective view of a battery lid of a rechargeable battery for mating with a PRC-117G radio. FIG. **18**B illustrates a cross-section view of the battery lid. FIG. **18**C illustrates a side perspective view of the battery lid. FIG. **18**D illustrates another cross-section view of the battery lid.

FIG. **19**A illustrates a top perspective view of a battery base of a rechargeable battery for mating with a PRC-117G radio. FIG. **19**B illustrates a cross-section view of the battery base. FIG. **19**C illustrates a detail view of a part of the cross-section view of the battery base shown in FIG. **19**B. FIG. **19**D illustrates a side perspective view of the battery base. FIG. **19**E illustrates another cross-section view of the battery base. FIG. **19**F illustrates another side perspective view of the battery base. The batteries **2202**A-**2202**B pref-

erably contain a coating or layer of the heat-shielding or blocking and/or heat-dissipating material. In an alternative embodiment, at least one of the batteries **2202**A-**2202**B does not have a housing, which reduces the weight and dimensions of the portable power case **2100**.

In a preferred embodiment, the batteries **2204**A-**2204**C are 29.4V lithium ion rechargeable batteries in a housing for mating with a PRC-117F radio. FIG. **26**A illustrates an angled perspective view of a rechargeable battery in a housing for mating with a PRC-117F radio. FIG. **26**B illustrates a top view of a rechargeable battery in a housing for mating with a PRC-117F radio. FIG. **26**C illustrates a side view of a rechargeable battery in a housing for mating with a PRC-117F radio including a connector. FIG. **26**D illustrates another side view of a rechargeable battery in a housing for mating with a PRC-117F radio. The batteries **2204**A-**2204**C preferably contain a coating or layer of the heat-shielding or blocking and/or heat-dissipating material. In an alternative embodiment, at least one of the batteries **2204**A-**2204**C does not have a housing, which reduces the weight and dimensions of the portable power case **2100**.

The portable power case is enclosed in a hard case (e.g., PELICAN® 1500) in a preferred embodiment. The hard case is formed of polypropylene in one embodiment. The hard case is preferably waterproof or water resistant. In one embodiment, the portable power case is sized to fit in a jerrycan holder attached to a vehicle.

FIG. **27**A illustrates a view of the exterior of one embodiment of the portable power case. The case includes a top portion **2602** (e.g., a lid) and a bottom portion **2604** (e.g., a base). The top portion **2602** and the bottom portion **2604** form a housing having an interior surface, an exterior surface, and an open interior space. The case includes latches **2610** for securing the contents of the case, a pressure purge valve **2612**, and a handle **2614**. The latches include a self-fusing silicone tape (e.g., RESCUE TAPE™) in a preferred embodiment to prevent the latches from rattling, which could give away a soldier's position and/or distract the soldier. A cap **2616** is provided to protect the USB ports.

In a preferred embodiment, the at least one battery and the at least one PCB are disposed within the open interior space of the bottom portion **2604** of the portable power case. In an alternative embodiment, one or more of the at least one PCB are disposed within the open interior space of the top portion **2602** of the portable power case.

The portable power case has mounting attachments (e.g., single stud fittings or double stud fittings) compatible with L-track tie down systems in one embodiment. L-track tie down systems are often installed in military vehicles and aircraft. Additionally or alternatively, the portable power case has mounting attachments compatible with A-track, E-track, F-track, and/or kaptive beam tie down systems. In a preferred embodiment, the mounting attachments are attached to the bottom portion **2604** of the portable power case.

FIG. **27**B illustrates a view of the exterior of another embodiment of the portable power case. A base for mounting at least one amplifier and at least one radio **2606** is attached to the top portion **2602** through shock absorbing cylinders **2608**. A base for securing the portable power case to a vehicle **2620** is attached to the bottom portion **2604** through shock absorbing cylinders **2618**.

In a preferred embodiment, the base for mounting at least one amplifier and at least one radio **2606**, the shock absorbing cylinders **2618**, and the base for securing the portable power case to a vehicle **2620** are formed from a shock mount interface assembly (e.g., HARRIS® 12050-3050-01). Alternative mounts are compatible with the present invention.

In an alternative embodiment, the portable power case includes the base for mounting at least one amplifier and at least one radio **2606** attached to the top portion **2602** through shock absorbing cylinders **2608**. In one embodiment, the portable power case has mounting attachments compatible with L-track, A-track, E-track, F-track, and/or kaptive beam tie down systems. In a preferred embodiment, the mounting attachments are attached to the bottom portion **2604** of the portable power case.

FIG. **28** illustrates a view of the portable power case with the cap (not shown) removed to show the USB ports. USB ports **2122**A and **2122**B are accessible on the front of the hard case.

The hard case is lined with foam in one embodiment. Additionally or alternatively, the case is lined with a material that is resistant to heat and/or electromagnetic interference. FIG. **29** shows one example of the portable power case **2100** lined with material resistant to heat **120**. The amplifier and radio give off a significant amount of heat. The heat resistant material prevents heat transfer from the amplifier and radio to the batteries. If a lithium ion battery overheats, it reduces performance of the battery, reduces the life span of the battery, and may result in a fire. Further, the batteries within the portable power case generate heat. Lining the portable power case with a material resistant to heat decreases the heat profile of soldiers, making them less vulnerable to enemy thermal imaging technology.

Additionally, the heat resistant material may also be anti-electromagnetic interference material. The anti-electromagnetic interference material lining creates a Faraday cage and prevents disruption by electromagnetic radiation. In an alternative embodiment, the case may be coated with an electromagnetic interference and/or radio frequency interference shielding paint including copper, silver, nickel, and/or graphite.

The portable power case provides for modularity that allows the user to disassemble and selectively remove the batteries installed within the portable power case housing in a preferred embodiment. This modularity allows the user to comply with Survival, Evasion, Resistance, and Escape (SERE) training. In case of attack, each of the batteries can be used to power the at least one radio and/or the at least one amplifier, as well as other gear, because each battery has its own battery management circuit.

As previously mentioned, shipping lithium ion batteries or devices with lithium ion batteries is banned or highly regulated in most parts of the world due to the risk of overheating and/or fire. Advantageously, this modularity makes it easier to ship or transport the portable power case because the batteries can be transported individually. In one example, the portable power case includes two batteries. A first battery can be shipped in the portable power case, while a second battery can be shipped separately from the portable power case. Then the case is reassembled and separate batteries placed back in the harness within the portable power case at the destination.

The portable power case has at least two access ports, at least two leads, or at least one access port and the at least one lead accessibly positioned on the exterior surface of the hard case. The at least two access ports, at least two leads, or at least one access port and the at least one lead are operable to charge the portable power case and supply power to electronic devices. In a preferred embodiment, the portable power case has four access ports or four leads. Each access port or lead can be used for both the charging function and

the power supply function. The access ports or leads are not dedicated to the charging function only or the power supply function only. The access ports or leads can be used for either function at any time. For example, if the portable power case has four access ports, all four access ports can be used for the charging the portable power case, three access ports can be used for charging the portable power case and one access port can be used to supply power to an electronic device, two access ports can be used for charging the portable power case and two access ports can be used to supply power to electronic devices, one access port can be used for charging the portable power case and three access ports can be used to supply power to electronic devices, or all four access ports can be used to supply power to electronic devices.

In one embodiment, the at least two access ports, the at least two leads, or the at least one access port and the at least one lead prioritize the charging of electronic devices. In one example, the portable power case has two access ports. The second access port will stop charging an electronic device when the available power in the portable power case is lower than a designated threshold. In another example, the portable power case has four access ports. The fourth access port will stop charging an electronic device when the available power in the portable power case is lower than a first designated threshold, the third access port will stop charging an electronic device when the available power in the portable power case is lower than a second designated threshold, and the second access port will stop charging an electronic device when the available power in the portable power case is lower than a third designated threshold.

The portable power case can supply power to electronic devices that are different for each access port or lead. In one example, the portable power case is supplying power to a wearable battery and an amplifier. In another example, the portable power case is supplying power to four wearable batteries.

In one embodiment, the portable power case provides power in an order of priority of the device and automatically cuts out devices of lower mission priority in order to preserve remaining power for higher priority devices. In one example, a radio has a first (i.e., top) priority, a tablet has a second priority, a mobile phone has a third priority, and a laser designator (e.g., Special Operations Forces Laser Acquisition Marker (SOFLAM)) has a fourth priority.

In one embodiment, the portable power case prioritizes at least one device by using at least one smart cable. The at least one smart cable stores information including, but not limited to, a unique identifier (e.g., MAC address) for the at least one device, power requirements of the at least one device, a type of device for the at least one device, and/or a priority ranking for the at least one device.

Additionally, the method used to charge the portable power case can be different for each access port or lead. In one example, the portable power case is charging using a solar panel and an AC adapter. In another example, the portable power case is charging using four AC adapters.

In a preferred embodiment, the at least two access ports, at least two leads, or at least one access port and the at least one lead are the same type of connector (e.g., female FISCHER® 105 A87 connectors or TAJIMI™ Electronics part number R04-P5f) and provide the same output voltage. Alternatively, the at least two access ports, at least two leads, or at least one access port and the at least one lead are made of at least two different types of connectors and/or provide different output voltages. Preferably, the diameter and/or shape of the connector is different for different input voltages. In one example, an access port or lead has a higher output voltage (e.g., 29.4V) and larger diameter, while another access port or lead has a lower output voltage (e.g., 16.8V) and smaller diameter. This coordination of higher voltage with larger diameter and lower voltage with smaller diameter makes it intuitive for an operator to use the correct access port or lead for the correct device (e.g., amplifier, radio, wearable battery, vehicle battery, AC adapter, generator, solar panel, laser designator). Advantageously, this coordination allows an operator to associate the correct access port or lead with the correct device in the dark. Thus, the access port or lead is an inherent voltage selector. Further, the operator can quickly connect devices without knowing an operating voltage, thereby maintaining situational awareness and eyes on combat.

FIG. **30**A shows a view of one embodiment of the access ports. The access ports are preferably staggered vertically and horizontally to allow for easy access to the ports. As shown in FIG. **30**B, the preferred embodiment includes a keyway (shown as a flat portion of the connector) to ensure correct orientation of cables. In one embodiment, the cables connected to the access ports located on the top row orient downwards and the cables connected to the access ports located on the bottom row orient upwards. Alternatively, the cables connected to the access ports located on the top row orient downwards and the cables connected to the access ports located on the bottom row orient upwards. A gasket **2702** is provided around each of the access ports to seal the interior of the case from the external environment. In a preferred embodiment, the access ports are circular connectors (e.g., female FISCHER® 105 A087 connectors or TAJIMI™ Electronics part number R04-P5f). In one embodiment, a dust cap is provided for each of the access ports to protect the access port from environmental elements when not in use.

In another preferred embodiment, the access ports are all oriented upwards. Advantageously, this embodiment allows an operator to quickly connect devices because the access ports orient in the same direction, thereby allowing the operator to develop motor memory.

FIG. **30**C shows a view of one embodiment of a portable power case with leads. The leads are preferably staggered vertically and horizontally to allow for easy access to the leads. A gasket **2702** is provided around each of the leads to seal the interior of the case from the external environment. In one embodiment, a dust cap is provided for each of the leads to protect the leads from environmental elements when not in use.

FIG. **30**D shows a cutaway view of one embodiment of a portion of the portable power case **2100**, which shows more details of the leads **2704**. An exterior gasket **2702** and an interior gasket **2714** is provided around each of the leads to seal the interior of the case from the external environment. Each lead **2704** has a connector portion **2706** and a wiring portion **2708**. Wiring portion **2708** is electrically connected to at least one battery. Connector portion **2706** can be any type or style of connector needed to mate to the equipment to be used with the portable power case **2100**. In a preferred embodiment, the connector portion **2706** is a female circular type of connector (e.g., female FISCHER® 105 A087 connector, TAJIMI™ part number R04-P5f). In an alternative embodiment, at least one connector portion **2706** is a male universal serial bus (USB), micro USB, lightning, and/or Firewire connector. In another embodiment, the connector portion **2706** is a connector designed to prevent arc flash (e.g., MELTRIC connectors). In yet another embodiment, the connector portion **2706** has an Ingress Protection (IP)

rating of IP2X, IP3X, IP4X, IP5X, IP6X, IPX1, IPX2, IPX3, IPX4, IPX5, IPX6, IPX7, or IPX8. More preferably, the connector portion **2706** has an IP rating of IPX6, IPX7, or IPX8. IP ratings are described in IEC standard 60529, ed. 2.2 (May 2015), published by the International Electrotechnical Commission, which is incorporated herein by reference in its entirety. In one embodiment, the connector portion meets standards described in Department of Defense documents MIL-STD-202E, MIL-STD-202F published February 1998, MIL-STD-202G published 18 Jul. 2003, and/or MIL-STD-202H published 18 Apr. 2015, each of which is incorporated herein by reference in its entirety.

In a preferred embodiment, the leads **2704** are flexible omnidirectional leads. Wiring portion **2708** is fitted into a channel formed in the portable power case **2100** such that connector portion **2706** extends away from the portable power case **2100**. A spring **2710** is provided around wiring portion **2708**, such that a portion of spring **2710** is inside the portable power case **2100** and a portion of spring **2710** is outside the portable power case **2100**. In one example, spring **2710** is a steel spring that is from about 0.25 inches to about 1.5 inches long. Wiring portion **2708** of lead **2704** and spring **2710** are held securely in the channel of the portable power case **2100** via a clamping mechanism **2712**. Alternatively, the wiring portion **2708** of lead **2704** and spring **2710** are held securely in the channel of the portable power case **2100** using an adhesive, a retention pin, a hex nut, a hook anchor, and/or a zip tie.

The presence of spring **2710** around wiring portion **2708** of lead **2704** allows lead **2704** to be flexed in any direction for convenient connection to equipment from any angle. The presence of spring **2710** around wiring portion **2708** of lead **2704** also allows lead **2704** to be flexed repeatedly without breaking or failing. The design of leads **2704** provides benefit over conventional leads and/or connectors that are rigid, wherein conventional rigid leads allow connection from one angle only and are prone to breakage if bumped.

In one embodiment, the flexible omnidirectional leads are attached to the portable power case via a panel mount pass through. In a preferred embodiment, the panel mount pass through is formed of metal (e.g., aluminum). Alternatively, the flexible omnidirectional leads are attached to the portable power case with a panel mount gasket. In one embodiment, a gasket is on the inside and/or outside of the portable power case to seal the portable power case from environmental elements (e.g., dust, water). In one embodiment, the gasket is formed of silicone or rubber. In another embodiment, a layer of heat shrink tubing is placed around the wiring portion before the spring is placed around the wiring portion. The heat shrink tubing is preferably flexible. Advantageously, the heat shrink tubing provides additional waterproofing for the battery.

The at least two access ports, at least two leads, or at least one access port and the at least one lead are positioned on the left side of the case relative to the latches in a preferred embodiment. FIG. **31** illustrates a block diagram of a portable power case in an ATV with three passengers. The ATV **2800** has a steering wheel **2802** and a seat for a driver **2804**. A seat for a first passenger **2806** is to the right of the driver. The first passenger is responsible for maintaining the security of the right side of the ATV. A seat for a second passenger **2808** is behind the driver. The second passenger is responsible for maintaining the security of the left side of the ATV. The locations of the first passenger and the second passenger allow for 360-degree visual coverage of the landscape surrounding the ATV. The portable power case **2100** is located to the right of the second passenger. Placing the access ports and/or leads on the left side of the case relative to the latches prevents the second passenger and/or gear from knocking the cables connected to the case loose from the access ports and/or leads. The trunk **2810** is available for storing additional gear.

FIG. **32** illustrates a block diagram of a portable power case in an ATV with four passengers. The ATV **2800** has a steering wheel **2802** and a seat for a driver **2804**. A seat for a first passenger **2806** is to the right of the driver. A seat for a second passenger **2808** is behind the driver. The second passenger is responsible for maintaining the security of the left side of the ATV. A seat for a third passenger **2812** is to the right of the seat for the second passenger **2808**. The portable power case **2100** is placed in the trunk **2810**.

In one embodiment, the portable power case includes at least one visual indicator for indicating the state of charge of an electronic device attached to an access port or lead. In one embodiment, the visual indicator is at least one LED. One preferred embodiment of a visual indicator is a set of light-emitting diodes (LEDs) (e.g., 5 LEDs), wherein five lit LEDs flashing or five lit LEDs indicates greatest charge and one lit LED or one lit LED flashing indicates least charge. In one embodiment, the LEDs are red, yellow, and/or green. In one example, two of the LEDs are green to indicate a mostly full battery in the electronic device, two of the LEDs are yellow to indicate a moderate charge in the electronic device, and one LED is red to indicate that the battery is almost drained in the electronic device. Additionally or alternatively, the LEDs include a blue LED to indicate that the access port or lead is currently attached to a device that is charging the portable power case.

In one embodiment, the at least one LED is preferably covered with a transparent material. In a preferred embodiment, the cover is formed of a clear plastic (e.g., poly(methyl methacrylate)). This provides an extra layer of protection for the at least one LED. This increases the durability of the at least one LED. The portable power case includes a waterproof sealant (e.g., silicone) around the cover.

In an alternative embodiment, the visual indicator for indicating the state of charge of an electronic device attached to an access port or lead is at least one LCD. A preferred embodiment of a visual indicator is at least one 5-bar liquid crystal display (LCD), wherein five bars flashing or five bars indicates greatest charge and one bar or one bar flashing indicates least charge. Another example of a visual indicator is at least one seven-segment numeric LCD, wherein the number 5 flashing or the number 5 indicates greatest charge and the number 1 or the number 1 flashing indicates least charge. Alternatively, an LCD displays the voltage of the electronic device as measured by the control electronics.

The at least one LCD is preferably covered with a transparent material. In a preferred embodiment, the cover is formed of a clear plastic (e.g., poly(methyl methacrylate)). This provides an extra layer of protection for the at least one LCD, much like a screen protector provides an extra layer of protection for a smartphone. This increases the durability of the at least one LCD. The portable power case includes a waterproof sealant (e.g., silicone) around the cover.

In an alternative embodiment, the state of charge of an electronic device attached to an access port or lead is displayed on an indicator incorporated into to a cable attaching the electronic device to the access port or lead. The state of charge is preferably displayed on the indicator when a button is pressed or a switch is turned on. In one embodiment, the cable is operable to communicate information to at least one remote device using a mobile application.

In yet another embodiment, the state of charge of an electronic device attached to an access port or lead is displayed on a separate state of charge indicator, such as the state of charge indicators disclosed in U.S. application Ser. No. 15/612,617 and US Publication No. 20150198670, each of which is incorporated herein by reference in its entirety. In one embodiment, the state of charge indicator is operable to be charged using induction charging.

The portable power case preferably includes at least one USB port for charging electronic devices (e.g., mobile phone, tablet, smartphone, camera, global positioning system devices (GPS), thermal imaging devices, weapon optics, watches, satellite phones, defense advanced GPS receivers). The at least one USB port is preferably accessibly positioned on the front side of the case. Advantageously, this positions the at least one USB port away from a second passenger of an ATV such that the second passenger's gear does not knock a USB cable loose, while allowing the at least one USB port to remain accessible. Alternatively, the at least one USB port is accessibly positioned on the left, right, or back side of the case or in the top portion of the case (e.g., the lid).

In a preferred embodiment, the at least one USB port connects to any 9-32 volt DC power input. In one embodiment, the at least one USB port has an LED (e.g., a blue LED) that illuminates when the at least one USB port is powered on. In a preferred embodiment, at least one protective dust cap protects the at least one USB port from environmental elements. In one embodiment, the portable power case includes two USB ports protected by one protective dust cap. The output voltage of the at least one USB port is 5 volts DC in one embodiment. The at least one USB port has a charging output up to 2.1 amps per USB device (4.2 amps maximum output) in one embodiment. In a preferred embodiment, the at least one USB port is compatible with APPLE® and ANDROID™ products.

As previously mentioned, the portable power case and wearable battery **2108** are connected through a DC-DC converter cable. Additionally, the battery protector **2114** is connected to the portable power case through a DC-DC converter cable.

FIG. **33**A illustrates an angled view of the housing of one embodiment of a DC-DC converter cable. FIG. **33**B shows an end view of the housing of one embodiment of a DC-DC converter cable. FIG. **33**C shows a side view of the housing of one embodiment of a DC-DC converter cable. FIG. **33**D shows a cross-section of the housing of one embodiment of a DC-DC converter cable. FIG. **33**E shows an end view of a connector end cap for the housing of one embodiment of a DC-DC converter cable. FIG. **33**F shows an angled view of a connector end cap for the housing of one embodiment of a DC-DC converter cable. FIG. **33**G shows an end view of a grommet end cap for the housing of one embodiment of a DC-DC converter cable. FIG. **33**H shows an angled view of a grommet end cap for the housing of one embodiment of a DC-DC converter cable.

In a preferred embodiment, the exterior of the housing has fins to dissipate heat (i.e., a heat sink). The fins provide a larger surface area to dissipate the heat. Additionally or alternatively, the housing of the DC-DC converter cable is formed of copper vacuum tubes encased in an aluminum extrusion. Copper has a high thermal conductivity, which allows heat to quickly dissipate, and aluminum provides a weight savings.

The system allows the portable power case **2100** to charge using the vehicle battery **2112** after the ignition is turned off. The system includes a battery protector **2114** to prevent users from being stranded due to a drained vehicle battery **2112**.

FIG. **34** illustrates a block diagram of the battery protector. The battery protector includes INPUT from the vehicle battery **2112** and OUTPUT to the DC-DC converter cable **2116**. A green LED **3002** and a red LED **3004** provide visual information regarding the current charge status. The battery protector includes a rotary switch **3008** to select a desired time or voltage setting. In a preferred embodiment, the battery protector is connected to the vehicle battery using ring terminals. Alternatively, the battery protector is connected to the vehicle battery using alligator clips or a NATO slave adapter.

In one embodiment, the battery protector is a timer set to a time where the load will not drain the vehicle battery (e.g., 2 minutes, 15 minutes, 30 minutes, 1 hour, 2 hours, 3 hours, 4 hours, 5 hours, 8 hours, or 12 hours). Additionally or alternatively, the battery protector is a low voltage disconnect (LVD) that automatically disconnects the load when the vehicle battery voltage falls below a set DC voltage (e.g., 10.6V, 10.8V, 11.0V, 11.2V, 11.4V, 11.6V, 11.8V, 12.0V, 12.1V, or 12.2V for a 12V battery or 19V, 20V, 21V, 21.4V, 22V, 22.5V, 22.8V, 23V, 24V, 24.2V, 25V, or 25.5V for a 24V battery). In one embodiment, the battery protector automatically reconnects the load when the battery voltage returns to a normal value (e.g., above the set DC voltage) after charging. The battery protector automatically detects the vehicle battery voltage (e.g., 12V or 24V) and selects a corresponding set DC voltage (e.g., 11.6V for a 12V battery or 22.8V for a 24V battery) in another embodiment.

The battery protector has over voltage protection that automatically disconnects the load when the battery protector detects a voltage higher than a set DC voltage (e.g., above 16V) in a preferred embodiment. In one embodiment, the battery protector automatically reconnects the load when the detected voltage falls below the set DC voltage (e.g., below 16V).

The battery protector includes an emergency override switch **3006** in one embodiment. This allows the load to charge using the vehicle battery for an additional period of time (e.g., 15 minutes) in an emergency by overriding a timed-out timer.

In a preferred embodiment, the battery protector includes a visual indicator (e.g., LED lights) to indicate a current status. In one embodiment, the battery protector has a green LED light to indicate that the engine is running and the load is charging; a flashing green LED light to indicate that the vehicle engine is off, the timer has started, and the load is charging; a flashing red LED light to indicate that the timer has expired and the load is no longer charging; a slow flashing red LED light to indicate that the vehicle battery voltage is below the set DC voltage and the load is no longer charging; and a solid red light to indicate an overvoltage condition. The battery protector is preferably waterproof. Alternatively, the battery protector is water resistant.

The system also allows the portable power case to charge using at least one alternating current (AC) adapter. In a preferred embodiment, the at least one AC adapter has an AC plug on a first end and a circular connector (e.g., male FISCHER® 105 A087 connector) on a second end. All of the at least two access ports, the at least two leads, or the at least one access port and the at least one lead can be used to charge the portable power case using AC adapters. In one embodiment, the portable power case has four access ports

and can be charged in 16 hours using one AC adapter, 8 hours using two AC adapters, and 4 hours using four AC adapters.

In a preferred embodiment, the at least one AC adapter accepts a 100-240 VAC input and has a DC output of 17.4V. In one embodiment, the at least one AC adapter has an indicator for the charge state (e.g., red/orange indicates charging and green indicates charged).

The portable power case is operable to be charged using at least one solar panel. In a preferred embodiment, the at least one solar panel is a combination signal marker panel and solar panel, such as that disclosed in US Publication Nos. 20170109978 and 20150200318, each of which is incorporated herein by reference in its entirety.

In a preferred embodiment, the solar cells are formed of microsystem enabled photovoltaic (MEPV) material, such as that disclosed in U.S. Pat. Nos. 8,736,108, 9,029,681, 9,093,586, 9,143,053, 9,141,413, 9,496,448, 9,508,881, 9,531,322, 9,548,411, and 9,559,219 and US Publication Nos. 20150114444 and 20150114451, each of which is incorporated herein by reference in its entirety.

In another preferred embodiment, the solar panel **2106** is made of glass free, flexible thin film solar modules, such as those sold by Flexopower USA (Raleigh, NC). The solar modules are formed of amorphous silicon with triple junction cell architecture. These solar modules continue to deliver power when damaged or perforated. Additionally, these panels provide higher production and a higher output in overcast conditions than comparable glass panels. These panels also provide better performance at a non-ideal angle of incidence.

FIG. **35** illustrates a portion of a combination signal marker panel and solar panel **3300** made with glass free, thin film solar modules. The combination signal marker panel and solar panel **3300** includes a plurality, e.g., one or more, of solar modules **3301** mounted on a flexible substrate **3334**. While FIG. **35** shows eighteen solar modules **3301** in the solar panel **2106**, this is exemplary only. The solar panel **2106** can include any number of solar modules **3301** configured in series, configured in parallel, or configured in any combination of series and parallel arrangements. In particular, the configuration of solar modules **3301** in the solar panel **2106** can be tailored in any way to provide a certain output voltage and current. The output of any arrangement of solar modules **3301** in the solar panel **2106** is a direct current (DC) voltage. Accordingly, the solar panel **2106** includes at least one output connector **3326** that is electrically connected to the arrangement of solar modules **3301** via a cable **3328**. The at least one output connector **3326** is used for connecting any type of DC load to the solar panel **2106**. In one embodiment, the cable **3328** of the at least one output connector **3326** includes a blocking diode to prevent power from running back into the solar panel. In a preferred embodiment, the at least one output connector **3326** is a circular connector (e.g., male FISCHER® 105 A087 connector).

In one embodiment, the at least one connector includes one or more connectors that allow a first solar panel to connect to a second solar panel in series or in parallel. This allows a plurality of solar panels **2106** of multiple combination signal marker panel and solar panels **3300** to be connected together in series, in parallel, or any combination of series and parallel arrangements.

In a preferred embodiment, the solar panel **2106** includes eighteen solar modules **3301**. The maximum power is about 118 W in one embodiment. The voltage at maximum power is about 28.8V in one embodiment. The current at maximum power is about 4.1 A in one embodiment.

The dimensions of the combination signal marker panel and solar panel **3300** are about 8 feet by about 3 feet when deployed in one embodiment. The weight of the combination signal marker panel and solar panel **3300** is preferably less than about 10 pounds. The combination signal marker panel and solar panel **3300** weighs about 9 pounds in one embodiment.

The combination signal marker panel and solar panel **3300** is preferably foldable. Prior art solar panels that are rollable require a tube to roll the solar panel. The combination signal marker panel and solar panel **3300** of the present invention does not require a tube, which provides a weight and volume savings advantage over prior art. The weight and dimensions of the combination signal marker panel are important because it must be easily transported by a human. Soldiers often carry 60-100 lbs. of gear, including equipment (e.g., radios, solar panels, batteries) in their rucksack or attached to their vest. Additional weight slows soldiers down and also makes it more likely that they will suffer injuries to their body (e.g., injuries to the back, shoulders, hips, knees, ankles, and feet). Additional volume also impedes the movement of the soldiers.

The combination signal marker panel and solar panel **3300** includes clips (female clip **3352** shown) to secure the combination signal marker panel and solar panel **3300** when not in use in one embodiment. The solar panel **2106** includes eyelets **3310**, which allows the solar panel to be secured to the ground or another surface. While FIG. **35** shows a total of four eyelets **3310** (one in each corner), this is exemplary only. The solar panel **2106** can include any number of eyelets **3310**. The combination signal marker panel and solar panel **3300** has a vertical fold axis **3312**, a top horizontal fold axis **3318**, and a plurality of horizontal fold axes **3314**.

FIG. **36** shows a front perspective view of the combination signal marker panel and solar panel **3300** while folded. The combination signal marker panel and solar panel **3300** includes a handle **3350**. The combination signal marker panel and solar panel **3300** also includes clips **3302** to secure the combination signal marker panel and solar panel **3300** when not in use in one embodiment. The clips **3302** are attached to a front flap **3336** via webbing **3354**. The clips are attached at the other end to webbing **3356**. The front flap **3336** partially covers a back side of the flexible substrate **3334** in one embodiment. The bottom webbing **3356** is in two pieces that are secured by hook-and-loop tape in one embodiment.

FIG. **37** shows a back perspective view of one embodiment of the combination signal marker panel and solar panel **3300** while folded. The combination signal marker panel and solar panel **3300** includes an integrated pocket **3304** for holding the signal marker panel **3600** (not shown) when the solar panel **2106** is in use while the signal marker panel **3600** is not in use. The integrated pocket **3304** can also be used to store the at least one output connector **3326** (not shown) when not in use. The integrated pocket **3304** has an opening **3360**. The opening **3360** of the integrated pocket **3304** is preferably closed using a hook-and-loop fastener system. Alternatively, the opening **3360** of the integrated pocket **3304** is closed using ties, an arrangement of buttons or snaps, or a zipper.

FIG. **38** illustrates a top perspective view of one embodiment of the combination signal marker panel and solar panel **3300** while unfolded. The front flap **3336** is connected to the female clips **3352** via webbing **3354**. The front flap **3336** is connected to a top section **3340**. The handle **3350** is attached

to the top section **3340**. The top section **3340** is also connected to the back flap **3338**. The back flap **3338** contains the integrated pocket **3304** (not shown). In a preferred embodiment, the integrated pocket **3304** is on the reverse side of the back flap **3338** such that the integrated pocket is not exterior facing when the combination signal marker panel and solar panel **3300** is folded. This protects the contents of the integrated pocket **3304** from accidentally spilling out. This also protects the cable **3328** from getting caught on other gear, vehicle components, etc. The back flap **3338** is also connected to the male clips **3358** via webbing **3356**.

FIG. **39** illustrates another portion of a combination signal marker and solar panel **3300**. The cable **3328** is electrically connected to the plurality of solar modules **3301** (not shown) via a junction box **3370**. The at least one output connector **3326** (not shown) is secured in the integrated pocket **3304**.

In the embodiment shown in FIG. **39**, the flexible substrate **3334** is shown in a camouflage pattern. Alternatively, the flexible substrate is a solid color (e.g., black, blue, brown, tan, green, white). In a preferred embodiment, the front flap, the top section, and the back flap are made of a canvas or nylon material. The front flap, the top section, and the back flap are formed of a camouflage pattern or a solid color (e.g., black, blue, brown, tan, green, white).

Representative camouflages include, but are not limited to, universal camouflage pattern (UCP), also known as ACUPAT or ARPAT or Army Combat Uniform; MultiCam, also known as Operation Enduring Freedom Camouflage Pattern (OCP); Universal Camouflage Patter-Delta (UCP-Delta); Airman Battle Uniform (ABU); Navy Working Uniform (NWU), including variants, such as, blue-grey, desert (Type II), and woodland (Type III); MARPAT, also known as Marine Corps Combat Utility Uniform, including woodland, desert, and winter/snow variants; Disruptive Overwhite Snow digital camouflage, and Tactical Assault Camouflage (TACAM).

Additionally, the combination signal marker panel and solar panel **3300** includes features that allow the combination signal marker panel and solar panel **3300** to be wearable in one embodiment. The combination signal marker panel and solar panel **3300** is be MOLLE-compatible in another embodiment. "MOLLE" means Modular Lightweight Load-carrying Equipment, which is the current generation of load-bearing equipment and backpacks utilized by a number of NATO armed forces. In one embodiment, the combination signal marker panel and solar panel **3300** incorporates a pouch attachment ladder system (PALS), which is a grid of webbing used to attach smaller equipment onto load-bearing platforms, such as vests, backpacks, and body armor. The pouch attachment ladder system is formed of a plurality of straps, a plurality of horizontal rows of webbing, a plurality of slits, and combinations thereof. For example, the PALS grid consists of horizontal rows of 1-inch (2.5 cm) webbing, spaced about one inch apart, and reattached to the backing at 1.5-inch (3.8 cm) intervals.

FIG. **40** illustrates one embodiment of a signal marker panel **3600**. The signal marker panel is preferably rectangular or square in shape. In a preferred embodiment, the signal marker panel is fluorescent orange (or "international orange") on a first side and cerise on a second side. In a preferred embodiment, the signal marker panel is formed of ripstop nylon. The signal marker panel **3600** includes tie straps **3602**, which allows the signal marker panel **3600** to attach to different surfaces (e.g., the ground, trees, a backpack). In one embodiment, the tie straps **3602** are made out of the same material as the signal marker panel **3600**, nylon, elastic, hook-and-loop tape, or parachute cord. In one embodiment, the signal marker panel **3600** includes snaps, which allows multiple signal marker panels **3600** to be connected together. The snaps include sockets **3604** (cap shown) and studs **3606**.

FIG. **41** illustrates another embodiment of a signal marker panel **3600**. The signal marker panel **3600** includes grommets **3608** on two opposing ends. The signal marker panel **3600** also includes hook tape **3610** and loop tape **3612** on both sides of the signal marker panel (i.e., on both the cerise and international orange sides). In an alternative embodiment, the signal marker panel includes hook tape **3610** and loop tape **3612** on only one side. The signal marker panel includes hook tape **3610** and/or loop tape **3612** on two opposing ends of at least one side of the signal marker panel in another embodiment. In one embodiment, the signal marker panel is about 3 feet wide and about 3 feet long.

The portable power case is operable to be charged using at least one non-rechargeable battery (e.g., BA-5590). Non-rechargeable batteries are often used for military operations. The non-rechargeable batteries are often discarded when 20-40% full to ensure that power is not lost when on the battlefield. Advantageously, the portable power case can be charged using the remaining charge on non-rechargeable batteries, resulting in less wasted energy.

The portable power case is also operable to be charged using at least one generator (e.g., NATO generators) or a fuel cell. In one embodiment, the fuel cell includes a metal-organic framework compound.

As previously described, the portable power case is operable to supply power to a wearable battery. The wearable battery **2108** is preferably the battery shown in FIG. **12**B, wherein the battery is lined with a first layer of the heat-shielding or blocking and/or heat-dissipating material and a second layer of the heat-shielding or blocking and/or heat-dissipating material, e.g., in a layer or lining, or coating application.

In an alternate embodiment, the wearable battery **2108** is a portable battery pack such as that disclosed in US Publication No. 20160118634 or U.S. application Ser. No. 15/720,270, each of which is incorporated herein by reference in its entirety.

The portable power case is also operable to supply power to a laser designator and/or rangefinder. In a preferred embodiment, the laser designator and/or rangefinder is a Special Operations Forces Laser Rangefinder Designator (SOFLAM). Alternative laser designators and/or rangefinders are compatible with the present invention.

The portable power case is also operable to supply power to a communications system. In a preferred embodiment, the communications system is the VIASAT® Move Out/Jump Off Kit (MOJO). The MOJO provides simultaneous line-of-sight and/or satellite communications for at least two channels. The MOJO requires a one-step process for turning the MOJO on or off using DC power, such as when using the portable power case. The MOJO requires a four-step process for turning the MOJO on or off using AC power. Further, the four steps must be completed in a specific order. Advantageously, the portable power case allows for the one-step process, which allows an operator to easily turn the MOJO on and off. Alternative communications systems are compatible with the present invention.

In one embodiment, the portable power case is operable to resuscitate a vehicle battery if the vehicle battery dies using a contingency cable. One example of a vehicle used by the military is a POLARIS® MRZRR. There are two versions of the MRZR®: diesel and gasoline. The diesel version

has two 12V lead acid batteries for a 24V output and an on-board alternator. The gasoline version has a 12V lead acid battery, but does not have an on-board alternator. The lack of an on-board alternator makes it more likely that the battery on the gasoline version will no longer have sufficient charge to power the vehicle (i.e., the battery dies), leaving the passengers and the vehicle stranded. The contingency cable is a DC-DC converter cable with a dedicated hard-wired male cigarette lighter plug connector and a 12V output. Alternatively, the contingency cable is connected to the vehicle battery using ring terminals, alligator clips, or a NATO slave adapter. The contingency cable is a DC-DC converter cable with a 12V or 24V output with a desulfating setting.

The portable power case is operable to connect to a power inverter. The power inverter changes direct current (DC) to alternating current (AC). This allows the portable power case to supply power to AC devices. The portable power case supplies power to the power inverter through a DC input cable. In a preferred embodiment, the DC input cable has one end with a circular connector (e.g., male FISCHER® 105 A087 connector). In an alternative embodiment, the portable power case includes a built-in power inverter.

The portable power case is operable to supply power to a fish finder and/or a chartplotter, an aerator or a live bait well, a camera (e.g., an underwater camera), a temperature and/or a depth sensor, a stereo, a radio, a drone, and/or a lighting system. In one embodiment, the lighting system includes at least one LED.

The above-mentioned examples are provided to serve the purpose of clarifying the aspects of the invention, and it will be apparent to one skilled in the art that they do not serve to limit the scope of the invention. By way of example, the keyway may force the cable at an angle other than 30.0°. Voltages of batteries may be different.

The above-mentioned examples are just some of the many configurations that the mentioned components can take on. All modifications and improvements have been deleted herein for the sake of conciseness and readability but are properly within the scope of the present invention.

The invention claimed is:

1. A portable power device comprising:
- a case;
- at least two leads or at least one access port and at least one lead;
- at least one port; and
- at least one battery;
- wherein the at least one port, the at least two leads, or the at least one port and the at least one lead are operable to supply power to at least one device;
- wherein the at least two leads or the at least one port and the at least one lead are operable to charge the portable power device using at least one charging device;
- wherein a spring is provided around a cable portion of the at least two leads or the at least one lead; and
- wherein a portion of the spring is positioned outside the portable power device and another portion of the spring is positioned inside the portable power device.

2. The portable power device of claim **1**, wherein the case comprises a lid and a base that form a housing having an interior surface, an exterior surface, and an open interior space.

3. The portable power device of claim **2**, wherein the interior surface is lined with foam, a material that is resistant to electromagnetic interference, and/or a material that is resistant to radio frequency interference.

4. The portable power device of claim **1**, wherein the case is waterproof or water resistant.

5. The portable power device of claim **1**, wherein the at least two leads or the at least one lead are operable to be flexed in a multiplicity of directions.

6. The portable power device of claim **1**, wherein a connector portion of the at least two leads or the at least one lead has an ingress protection (IP) rating of IPX6, IPX7, or IPX8.

7. The portable power device of claim **1**, wherein a layer of heat shrink tubing is placed around the cable portion before the spring is provided around the cable portion.

8. The portable power device of claim **1**, wherein the at least one battery is rechargeable.

9. The portable power device of claim **1**, wherein the at least one port is a circular connector.

10. The portable power device of claim **1**, wherein the at least two leads include a first lead and a second lead, and wherein the first lead and second lead are staggered vertically and horizontally.

11. A portable power device comprising:
- a case;
- at least two leads or at least one port and at least one lead; and
- at least one battery;
- wherein the at least two leads or the at least one port and the at least one lead are operable to supply power to at least one device;
- wherein the at least two leads or the at least one port and the at least one lead are operable to charge the portable power device using at least one charging device;
- wherein the portable power device is connected to the at least one charging device through a cable with a battery protector;
- wherein a spring is provided around a cable portion of the at least two leads or the at least one lead; and
- wherein a portion of the spring is positioned outside the portable power device and another portion of the spring is positioned inside the portable power device.

12. The portable power device of claim **11**, wherein the case comprises a lid and a base.

13. The portable power device of claim **11**, wherein the at least two leads or the at least one lead are operable to be flexed in a multiplicity of directions.

14. The portable power device of claim **11**, wherein the battery protector prevents the portable power device from draining the at least one charging device.

15. The portable power device of claim **11**, wherein the battery protector is connected to the vehicle battery using ring terminals, alligator clips, or a North Atlantic Treaty Organization (NATO) slave adapter.

16. A portable power device comprising:
- a case;
- a printed circuit board (PCB) including control electronics;
- at least two leads or at least one port and at least one lead connected to the PCB; and
- at least one battery connected to the PCB;
- wherein the at least two leads or the at least one port and the at least one lead are operable to supply power to at least one device;
- wherein the at least two leads or the at least one access port and the at least one lead are operable to charge the portable power device using at least one charging device; and
- wherein a spring is provided around a cable portion of the at least two leads or the at least one lead, wherein a

portion of the spring is positioned outside the portable power device and another portion of the spring is positioned inside the portable power device.

17. The portable power case of device **16**, wherein the at least two leads or the at least one lead further includes a connector portion.

18. The portable power device of claim **16**, wherein the at least two leads or the at least one lead are operable to be flexed in a multiplicity of directions.

19. The portable power device of claim **16**, wherein an exterior surface of the case includes at least one indicator.

20. The portable power device of claim **16**, wherein the control electronics include at least one processor, and wherein one or more of the at least one processor is programmed to periodically measure the state of charge and send state of charge information to at least one remote device.

* * * * *