US012385623B2

(12) **United States Patent**
Harrison et al.

(10) **Patent No.: US 12,385,623 B2**
(45) **Date of Patent: Aug. 12, 2025**

(54) **BEAM-SHAPING LIGHTING SYSTEMS**

(71) Applicant: **Korrus, Inc.**, Los Angeles, CA (US)

(72) Inventors: **Benjamin Harrison**, Sierra Madre, CA (US); **Paul Pickard**, Acton, CA (US)

(73) Assignee: **KORRUS, INC.**, Los Angeles, CA (US)

(*) Notice: Subject to any disclaimer, the term of this patent is extended or adjusted under 35 U.S.C. 154(b) by 0 days.

(21) Appl. No.: **18/747,352**

(22) Filed: **Jun. 18, 2024**

(65) **Prior Publication Data**

US 2025/0020310 A1 Jan. 16, 2025

Related U.S. Application Data

(63) Continuation-in-part of application No. 18/191,719, filed on Mar. 28, 2023, now abandoned, which is a

(Continued)

(51) **Int. Cl.**
F21V 7/00 (2006.01)
F21V 8/00 (2006.01)

(Continued)

(52) **U.S. Cl.**
CPC ***F21V 7/0091*** (2013.01); ***F21V 13/02*** (2013.01); ***G02B 6/003*** (2013.01); ***G02B 6/0031*** (2013.01);

(Continued)

(58) **Field of Classification Search**
CPC F21V 7/0091; F21V 13/02; F21V 9/30; G02B 6/003; G02B 6/0031; G02B 6/0068;

(Continued)

(56) **References Cited**

U.S. PATENT DOCUMENTS

4,001,571 A 1/1977 Martin
4,698,734 A 10/1987 Ngai

(Continued)

FOREIGN PATENT DOCUMENTS

WO 2015089517 6/2015
WO 2016003551 1/2016

(Continued)

OTHER PUBLICATIONS

"Acuity Brands introduces Luminaire with Tunable White Technology," Acuity Brands, Apr. 24, 2013, 2pp.

(Continued)

Primary Examiner — Elmito Breval
(74) *Attorney, Agent, or Firm* — Jay M. Brown

(57) **ABSTRACT**

Lighting system having visible-light source including semiconductor light-emitting devices arranged for generating plurality of visible-light emissions having range of color points including cool to very cool white color point for daytime and warm to very warm white color point for nighttime. Optical system arranged for causing some visible-light emissions to have range of beam widths including relatively wide and narrow beam widths. Mounting system causing range of beam directions. Control system causing visible-light emissions to include daytime configuration having cool to very cool white color point and relatively wide beam width, and nighttime configuration having warm to very warm white color point and relatively narrow beam width. Daytime configuration includes control system for causing visible-light emissions to include lateral- or up-light emissions, promoting relatively high equivalent melanopic lux. Nighttime configuration includes control system for causing visible-light emissions to include down-light emissions promoting relatively low equivalent melanopic lux.

20 Claims, 43 Drawing Sheets

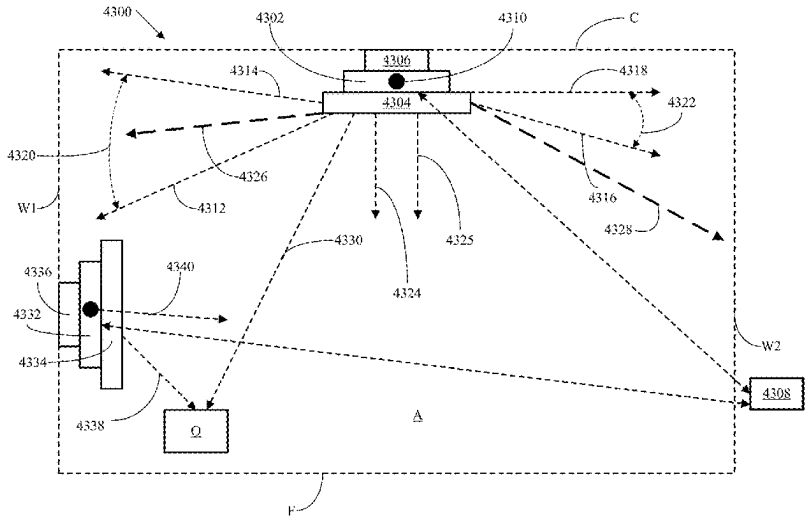

Related U.S. Application Data

continuation of application No. 17/100,666, filed on Nov. 20, 2020, now Pat. No. 11,635,188, which is a continuation-in-part of application No. 16/393,518, filed on Apr. 24, 2019, now Pat. No. 11,585,515, which is a continuation-in-part of application No. 16/279,396, filed on Feb. 19, 2019, now abandoned, which is a continuation-in-part of application No. 16/049,452, filed on Jul. 30, 2018, now Pat. No. 10,701,775, which is a continuation-in-part of application No. PCT/US2018/029380, filed on Apr. 25, 2018, said application No. 16/279,396 is a continuation of application No. 15/937,843, filed on Mar. 27, 2018, now Pat. No. 10,253,948, and a continuation-in-part of application No. PCT/US2016/015435, filed on Jan. 28, 2016.

(60) Provisional application No. 62/665,980, filed on May 2, 2018, provisional application No. 62/562,714, filed on Sep. 25, 2017, provisional application No. 62/491,137, filed on Apr. 27, 2017, provisional application No. 62/477,408, filed on Mar. 27, 2017.

(51) **Int. Cl.**

F21V 13/02	(2006.01)
H05B 47/16	(2020.01)
F21Y 103/10	(2016.01)
F21Y 113/20	(2016.01)
F21Y 115/10	(2016.01)

(52) **U.S. Cl.**

CPC ***H05B 47/16*** (2020.01); *F21Y 2103/10* (2016.08); *F21Y 2113/20* (2016.08); *F21Y 2115/10* (2016.08)

(58) **Field of Classification Search**

CPC G02B 6/0045; H05B 47/16; H05B 45/20; F21Y 2103/10; F21Y 2115/10; Y02B 20/40

See application file for complete search history.

(56) **References Cited**

U.S. PATENT DOCUMENTS

5,032,960	A	7/1991	Katoh
5,521,801	A	5/1996	Pesau
5,577,492	A	11/1996	Parkyn, Jr.
5,676,453	A	10/1997	Parkyn, Jr.
5,806,955	A	9/1998	Parkyn, Jr.
D483,510	S	12/2003	Fritze
7,422,347	B2	9/2008	Miyairi
7,431,481	B2	10/2008	Stefanov
7,494,259	B2	2/2009	Hayashi
7,679,281	B2	3/2010	Kim
7,690,810	B2	4/2010	Saitoh
7,717,598	B2	5/2010	Kakizaki
7,731,395	B2	6/2010	Parkyn
7,766,508	B2	8/2010	Villard
7,857,482	B2	12/2010	Reo
7,918,589	B2	4/2011	Mayfield, III
7,967,477	B2	6/2011	Bloemen
8,100,551	B2	1/2012	Mayfield, III
8,109,647	B2	2/2012	Soo
8,246,219	B2	8/2012	Teng
8,328,403	B1	12/2012	Morgan
8,388,180	B2	3/2013	Chang
8,403,522	B2	3/2013	Chang
8,408,739	B2	4/2013	Villard
8,408,775	B1	4/2013	Coleman
8,436,556	B2	5/2013	Eisele
8,506,612	B2	8/2013	Ashdown
8,540,394	B2	9/2013	Veerasamy
8,657,467	B2	2/2014	Hsieh
8,657,479	B2	2/2014	Morgan
8,690,382	B2	4/2014	Farmer
8,702,265	B2	4/2014	May
8,754,589	B2	6/2014	Chemel
8,757,834	B2	6/2014	Chang
8,757,835	B2	6/2014	Chang
8,764,220	B2	7/2014	Chan
8,764,226	B2	7/2014	Roberts
8,764,237	B2	7/2014	Wang
8,789,966	B2	7/2014	McCanless
8,805,550	B2	8/2014	Chemel
8,823,277	B2	9/2014	Chemel
8,827,487	B2	9/2014	Farmer
8,841,859	B2	9/2014	Chemel
8,866,408	B2	10/2014	Chemel
8,882,298	B2	11/2014	Gershaw
8,888,316	B2	11/2014	Handsaker
8,905,575	B2	12/2014	Durkee
8,954,170	B2	2/2015	Chemel
8,956,010	B2	2/2015	Huang
9,006,986	B2	4/2015	Van De Ven
9,072,133	B2	6/2015	Chemel
9,116,274	B2	8/2015	Parker
9,125,254	B2	9/2015	Chemel
9,295,144	B2	3/2016	Bora
9,410,664	B2	8/2016	Krames
9,459,396	B1	10/2016	Householder
9,474,119	B1	10/2016	Chen
9,519,095	B2	12/2016	Wilcox
9,645,303	B2	5/2017	Tarsa
9,746,173	B2	8/2017	Dau
9,803,810	B2	10/2017	Vamberi
10,022,556	B1	7/2018	Holbert
10,161,610	B2	12/2018	Quilici
10,405,406	B2	9/2019	Liszt
10,477,636	B1	11/2019	Petluri
10,823,347	B2	11/2020	Snell
10,827,580	B2	11/2020	Petluri
11,460,171	B1	10/2022	Wilkerson
2005/0135115	A1	6/2005	Lamb
2005/0281023	A1	12/2005	Gould
2005/0281024	A1	12/2005	Mayfield, III
2006/0203494	A1	9/2006	Ohkawa
2007/0041171	A1	2/2007	Ohkawa
2007/0047229	A1	3/2007	Lee
2007/0183148	A1	8/2007	Mayfield, III
2007/0211457	A1	9/2007	Mayfield, III
2007/0223219	A1	9/2007	Medendorp, Jr.
2007/0291481	A1	12/2007	Gould
2008/0043490	A1	2/2008	Coleman
2008/0285267	A1	11/2008	Santoro
2009/0073683	A1	3/2009	Chen
2009/0129084	A1	5/2009	Tsao
2009/0244893	A1	10/2009	Villard
2009/0296388	A1	12/2009	Wu
2010/0177084	A1	7/2010	Murata
2010/0220269	A1	9/2010	Takama
2010/0327768	A1	12/2010	Kong
2011/0013387	A1	1/2011	Kanade
2011/0043486	A1	2/2011	Hagiwara
2011/0044022	A1	2/2011	Ko
2011/0141721	A1	6/2011	Kato
2011/0285314	A1	11/2011	Carney
2011/0299277	A1	12/2011	Ehara
2012/0170258	A1	7/2012	Vanduinen
2013/0003370	A1	1/2013	Watanabe
2013/0063035	A1	3/2013	Baddela
2013/0208495	A1	8/2013	Dau
2013/0235580	A1	9/2013	Smith
2013/0293152	A1	11/2013	Barroso
2014/0078728	A1	3/2014	Rodgers
2014/0119015	A1	5/2014	Morgan
2014/0168961	A1	6/2014	Dubord
2014/0177209	A1	6/2014	Carney
2014/0184088	A1	7/2014	Lu
2014/0204023	A1	7/2014	Kumar
2014/0226322	A1	8/2014	Chan
2014/0228914	A1	8/2014	Van De Ven

(56) **References Cited**

U.S. PATENT DOCUMENTS

2014/0268728	A1	9/2014	Hussell
2014/0268752	A1	9/2014	Werr
2014/0268869	A1	9/2014	Blessitt
2015/0055371	A1	2/2015	Van De Ven
2015/0117022	A1	4/2015	Meir
2015/0211710	A1	7/2015	Speier
2015/0247633	A1	9/2015	Dau
2015/0348468	A1	12/2015	Chen
2015/0351187	A1	12/2015	McBryde
2016/0066383	A1	3/2016	Dias
2016/0195225	A1	7/2016	Carney
2016/0227618	A1	8/2016	Meerbeek
2016/0363769	A1	12/2016	Masuda
2017/0038040	A1	2/2017	May
2017/0069290	A1	3/2017	Lee
2017/0097126	A1	4/2017	Harbers
2017/0140145	A1	5/2017	Shah
2017/0142809	A1	5/2017	Paolini
2017/0227174	A1	8/2017	May
2017/0257925	A1	9/2017	Forbis
2017/0299146	A1	10/2017	Meerbeek
2018/0077783	A1	3/2018	Sooch
2018/0113244	A1	4/2018	Vasylyev
2018/0117193	A1	5/2018	Yadav
2018/0132320	A1	5/2018	Fredricks
2018/0216791	A1	8/2018	Leung
2018/0317296	A1	11/2018	Chen
2018/0338355	A1	11/2018	Petluri
2018/0368218	A1	12/2018	Petluri
2018/0368219	A1	12/2018	Petluri
2019/0013960	A1	1/2019	Sadwick
2019/0029092	A1	1/2019	Petluri
2019/0069355	A1	2/2019	Petluri
2019/0098720	A1	3/2019	Petluri
2019/0132928	A1	5/2019	Rodinger
2019/0174587	A1	6/2019	Petluri
2019/0253670	A1	8/2019	Chien
2019/0254142	A1	8/2019	Petluri
2020/0103591	A1	4/2020	Tarsa
2020/0370719	A1	11/2020	Keller
2021/0095835	A1	4/2021	Gladden
2021/0112647	A1	4/2021	Zane
2021/0127475	A1	4/2021	Bessems
2021/0195706	A1	6/2021	Vissenberg

FOREIGN PATENT DOCUMENTS

WO	2017106759	A1	6/2017
WO	2017131713	A1	8/2017
WO	2017131714	A1	8/2017
WO	2017131715	A1	8/2017
WO	2018200685	A2	11/2018
WO	2018200685	A3	12/2018
WO	2019139636	A1	7/2019
WO	2019139637	A1	7/2019
WO	2019140306	A1	7/2019
WO	2019140309	A1	7/2019
WO	2019140326	A1	7/2019
WO	2019140327	A2	7/2019

OTHER PUBLICATIONS

"Circadian lighting design," downloaded on Sep. 16, 2019 from https://standard.wellcertified.com/lightycircadian-lighting-design, 3pp.
"Diffuse sky radiation," downloaded on Jun. 18, 2019 from https://en.wikipedia.org/wiki/Diffuse_sky_radiation; 7pp.
"Choosing lenses for Power LED based luminaire," Intra-Lighting, downloaded on Mar. 19, 2018 from www.intra-lighting.com; 8pp.
"Customized Optics Product Information—Edgelit technology," Karl Jungbecker GmbH, downloaded on Feb. 3, 2017 from www.jungbecker.de, 2pp.
"Fusion Optix MicroTEK tm Platform," Fusion Optix, dated 2016, downloaded on Feb. 3, 2017 from www.fusionoptix.com, 4pp.
"GLT Technology," GLT, downloaded on Feb. 3, 2017 from www.glthome.com, 6pp.
"How to choose TIR lenses for high power LEDs," 612 Photonics, downloaded on Mar. 19, 2018 from www.612photonics.com; 7pp.
"Lucent Optics—Planar Optical Light Guides for Light Collection and Collimation," Lucent Optics, Inc., downloaded on Feb. 3, 2017 from www.lucentoptics.com, 3pp.
"Mellow Light-Recessed and surface-mounted luminaire," dated Jan. 2017; Zumtobel Lighting Inc.; downloaded on May 17, 2017 from www.zumtobel.us; 5pp.
"Sylvania—OSRAM OmniPoint Wins Two Innovation Awards at LIGHTFAIR International 2015," dated May 5, 2015, downloaded on Feb. 3, 2017 from www.sylvania.com, 3pp.
Alice Liao, "LEDs: Understanding Optical Performance," dated Oct. 13, 2014, downloaded on Mar. 19, 2018 from www.archlighting.com; 12pp.
Archetype X With Type Distribution, Hubbell Lighting, 17760 Rowland St., City of Industry, California; (Oct. 26, 2016); 12pp.; www.kimlighting.com.
Brennan et al, "Outcome-Based Design for Circadian Lighting: An Integrated Approach to Simulation & Metrics," IBPSA-USA, 2018 Building Performance Analysis Conference and SimBuild, Sep. 26-28, 2018, pp. 141-148, 8pp.
Brett Shriver, "Current and future projection of edge-lit LED panel adoption in lighting," Global Lighting Technologies Inc., dated 2014, downloaded on Mar. 19, 2018 from www.glthome.com, 4pp.
Brown et al, "The Melanopic Sensitivity Function Accounts for Melanopsin-Driven Responses in Mice under Diverse Lighting Conditions," published Jan. 3, 2013, at http://dx.doi.org/10.1371/journal.pone.0053583, 11pp.
Color Temperature (Kelvin), www.westinghouselighting.com, Jun. 13, 2024, 3pp.
Commonly-owned U.S. Appl. No. 62/712,191, filed Jul. 30, 2018, entitled "Switchable Systems for White Light with High Color Rendering and Biological Effects," 94pp.
Commonly-owned U.S. Appl. No. 62/757,664, filed Nov. 8, 2018, entitled "Two-Channel Tunable Lighting Systems With Controllable Equivalent Melanopic Lux and Correlated Color Temperature Outputs," 103pp.
Commonly-owned U.S. Appl. No. 62/757,672, filed Nov. 8, 2018, entitled "Switchable Systems for White Light With High Color Rendering and Biological Effects", 150pp.
Commonly-owned U.S. Appl. No. 62/758,411, filed Nov. 9, 2018, entitled "Display Lighting Systems with Crircadian Effects," 76pp.
Commonly-owned U.S. Appl. No. 62/758,447, filed Nov. 9, 2018, entitled "Display Systems with Circadian Lighting," 64pp.
Ewing et al, "Simulating Circadian Light: Multi-Dimensional Illuminance Analysts," Proceedings of the 15th IBPSA Conference, Aug. 7-9, 2017, pp. 2363-2371, 9pp.
Figueiro et al.; "Designing with Circadian Stimulus"; Illuminating Engineering Society; Oct. 2016; p. 31-34.
Freyssinier et al, "The Class A Color Designation for Light Sources," 2013 DOE Solid-State Lighting R&D Workshop, Jan. 29-31, 2013, 26pp.
Gall et al.; "Definition and Measurement of Circadian Radiometric Quantities"; CIE Symposium on Light and Health: Non-Visual Effects; 2004; 5 pages.
Hye Oh et al., "Healthy, natural, efficient and tunable lighting: four-package white LEDs for optimizing the circadian effect, color quality and vision performance," Light: Science & Applications 3.2 (2014); 23pp.
International Search Report and written opinion of the ISR dated Jan. 11, 2022 in PCT/US2021/072512 filed Nov. 19, 2021 entitled "Lighting Systems Generating Visible-Light Emissions for Dynamically Emulating Sky Colors," 8pp.
Lucas et al, "Measuring and using light in the melanopsin age," Trends in Neurosciences, Jan. 2014, vol. 37, No. 1, 9pp.
MP Ratios—Can we agree on how to calculate them, Illuminating Engineering Society, www.ies.org, Nov. 27, 2019, 13pp.
PCT International Patent Application No. PCT/US18/16662, filed on Feb. 2, 2018, titled "Lighting Systems Generating Partially-Collimated Light Emissions," 90pp.

(56) **References Cited**

OTHER PUBLICATIONS

Pickard, Paul, EcoSense Lighting Inc., Presentation at Illuminating Engineering Society (IES) Annual Conference Aug. 8-10, 2019, 37pp.
Rea et al, "White Lighting: A Provisional Model for Predicting Perceived Tint in 'White' Illumination," Color Research and Application, vol. 39, No. 5, Oct. 2014, pp. 466-479, 14pp.
Rea et al.; "Modelling the spectral sensitivity of the human circadian system"; Light Research & Technology; Dec. 2011; 12 pages.
Seitinger, "Polychromatic light for circadian support and visual comfort," Artificial Light at Night 2015, published by Philips Lighting, 25pp.
Smith, Glenn, "Human color vision and the unsaturated blue color of the daytime sky," Am. J. Phys. 73 (7) 590-597, Jul. 2005, 8pp.
Vertical and Horizontal Light Intensity Measurement, Access Fixtures LLC, www.accessfixtures.com, Oct. 4, 2024; 6pp.
Zagury, Frederic, "The Color of the Sky," Atmospheric and Climate Sciences, (2012),2, 510-517; 8pp.

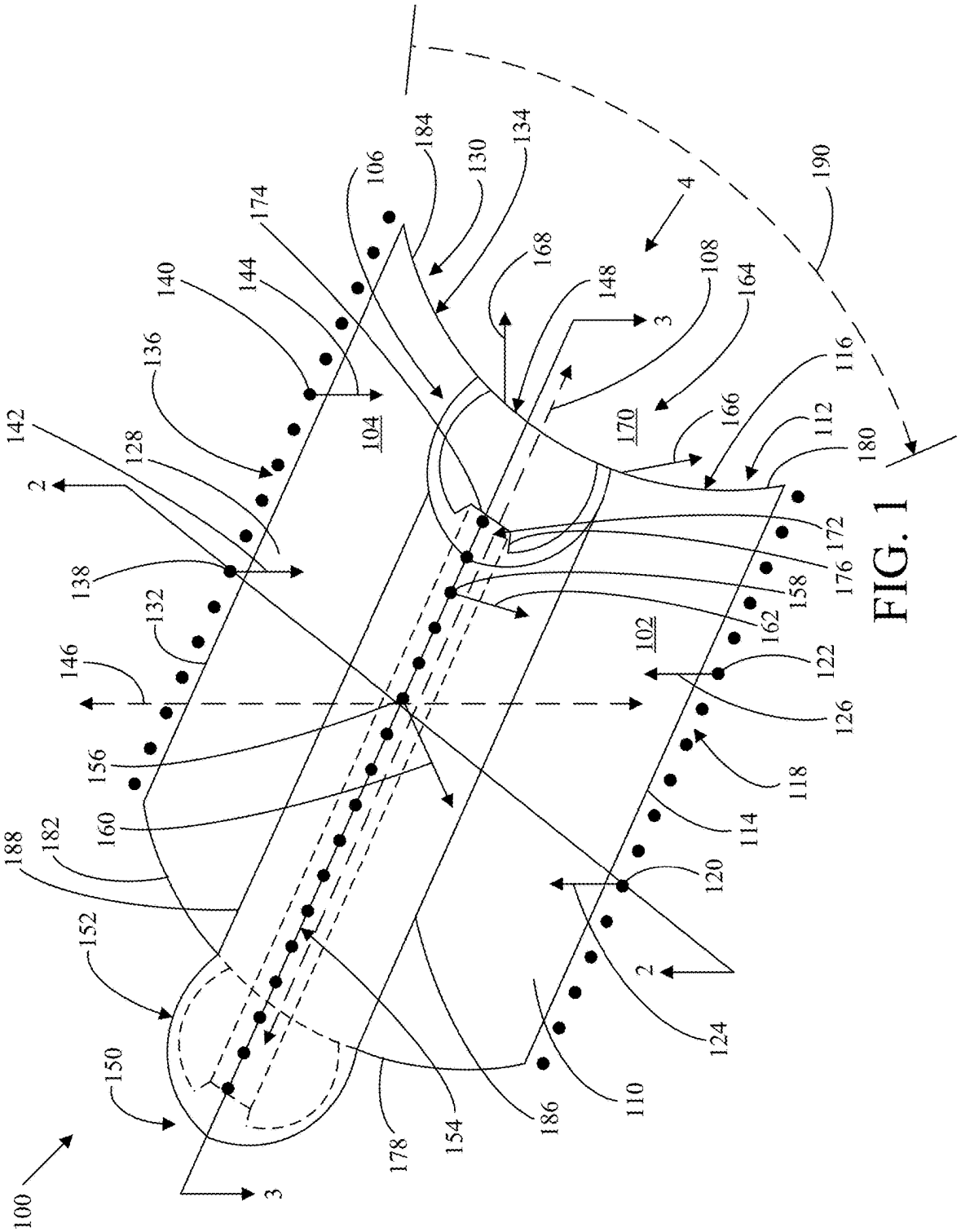
100
102
104
106
108
110
112
114
116
118
120
122
124
126
128
130
132
134
136
138
140
142
144
146
148
150
152
154
156
158
160
162
164
166
168
170
172
174
176
178
180
182
184
186
188
190
2
3
4

FIG. 1

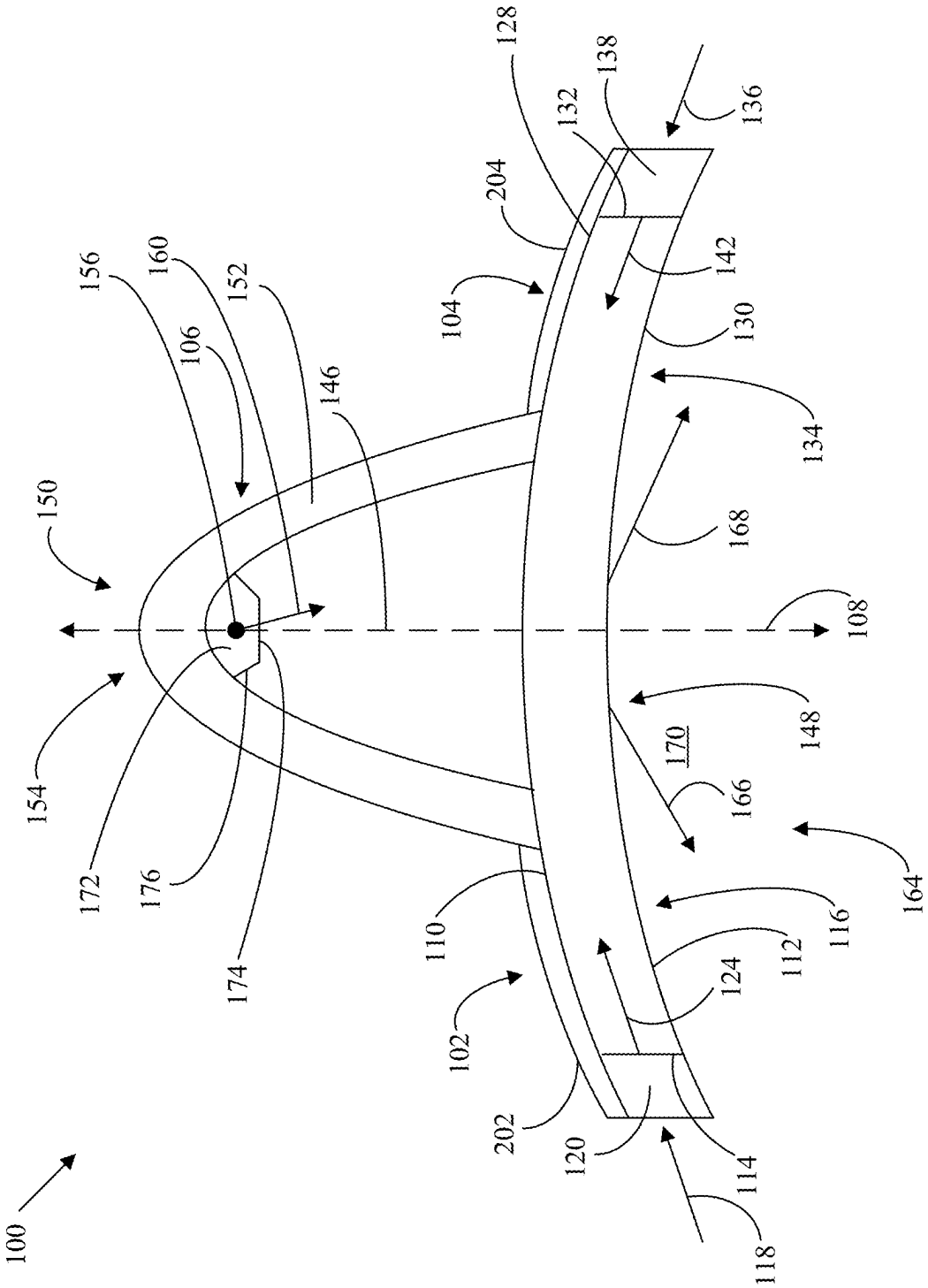
100
150
154
156
160
106
152
146
172
176
174
104
204
128
132
138
136
142
130
134
168
108
148
170
166
164
116
112
124
110
102
202
120
114
118

FIG. 2

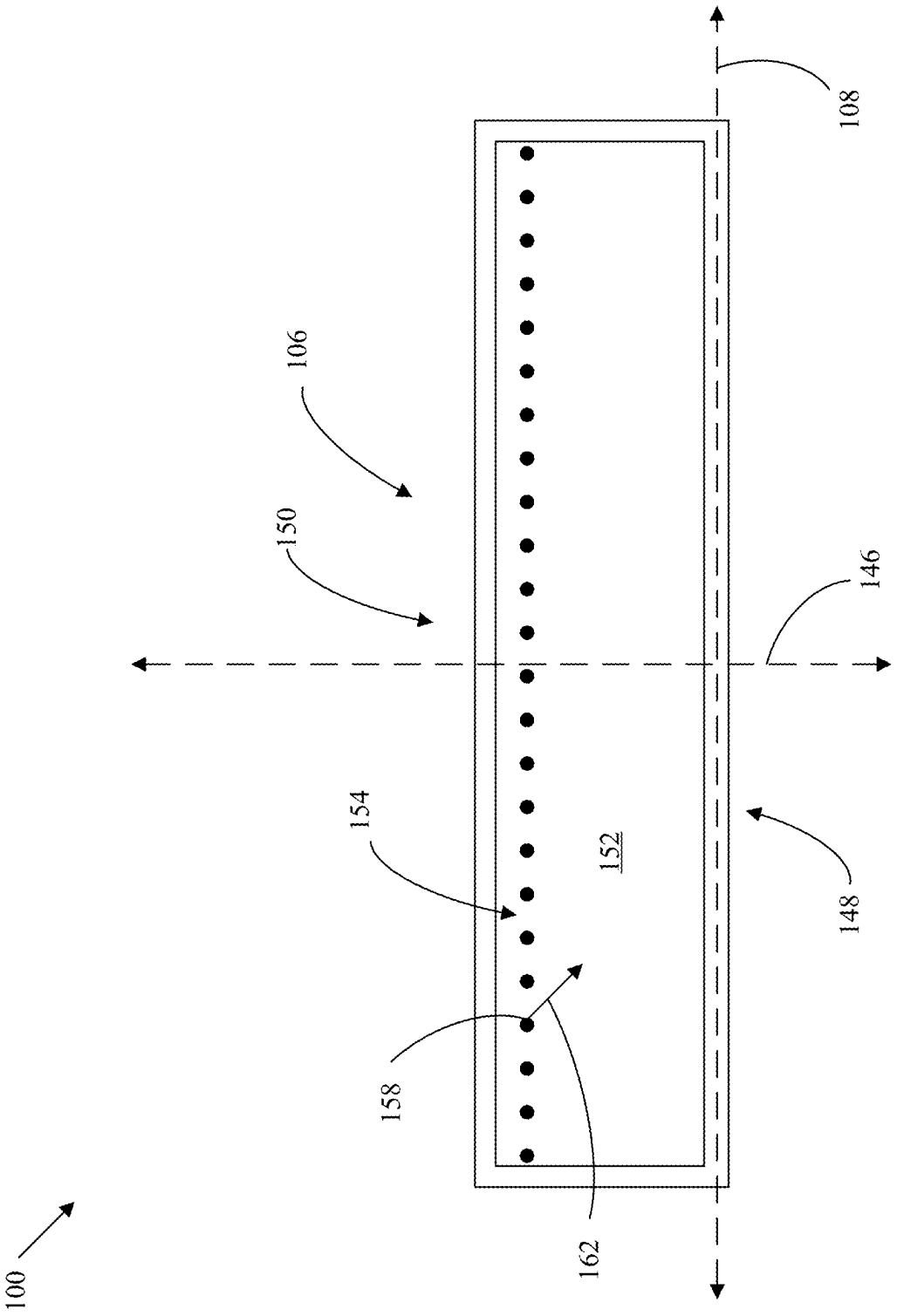

FIG. 3

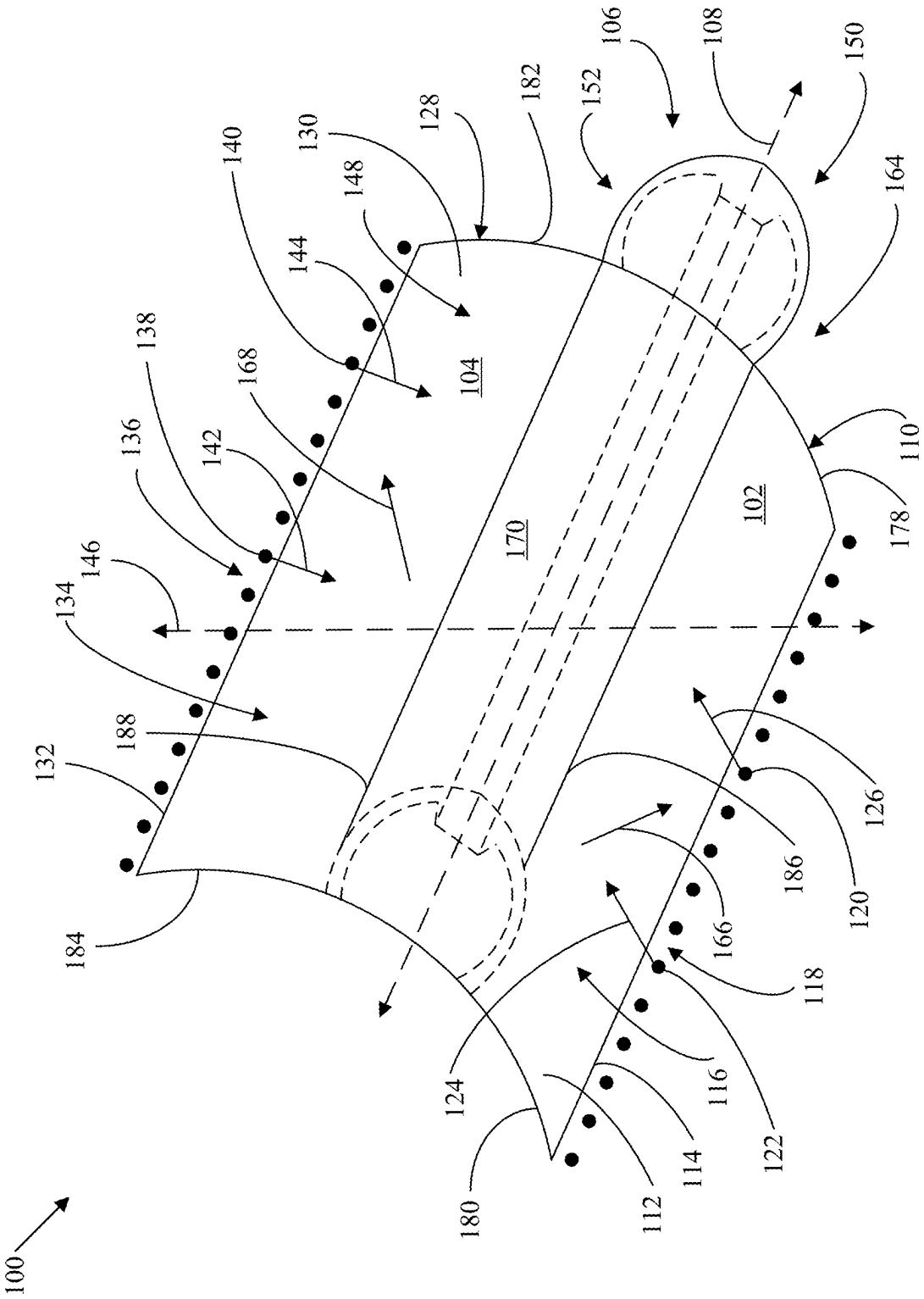
100
104
102
170
106
108
150
164
110
178
126
120
186
166
118
122
116
114
112
180
124
184
132
188
134
146
136
138
168
142
140
144
148
130
128
182
152

FIG. 4

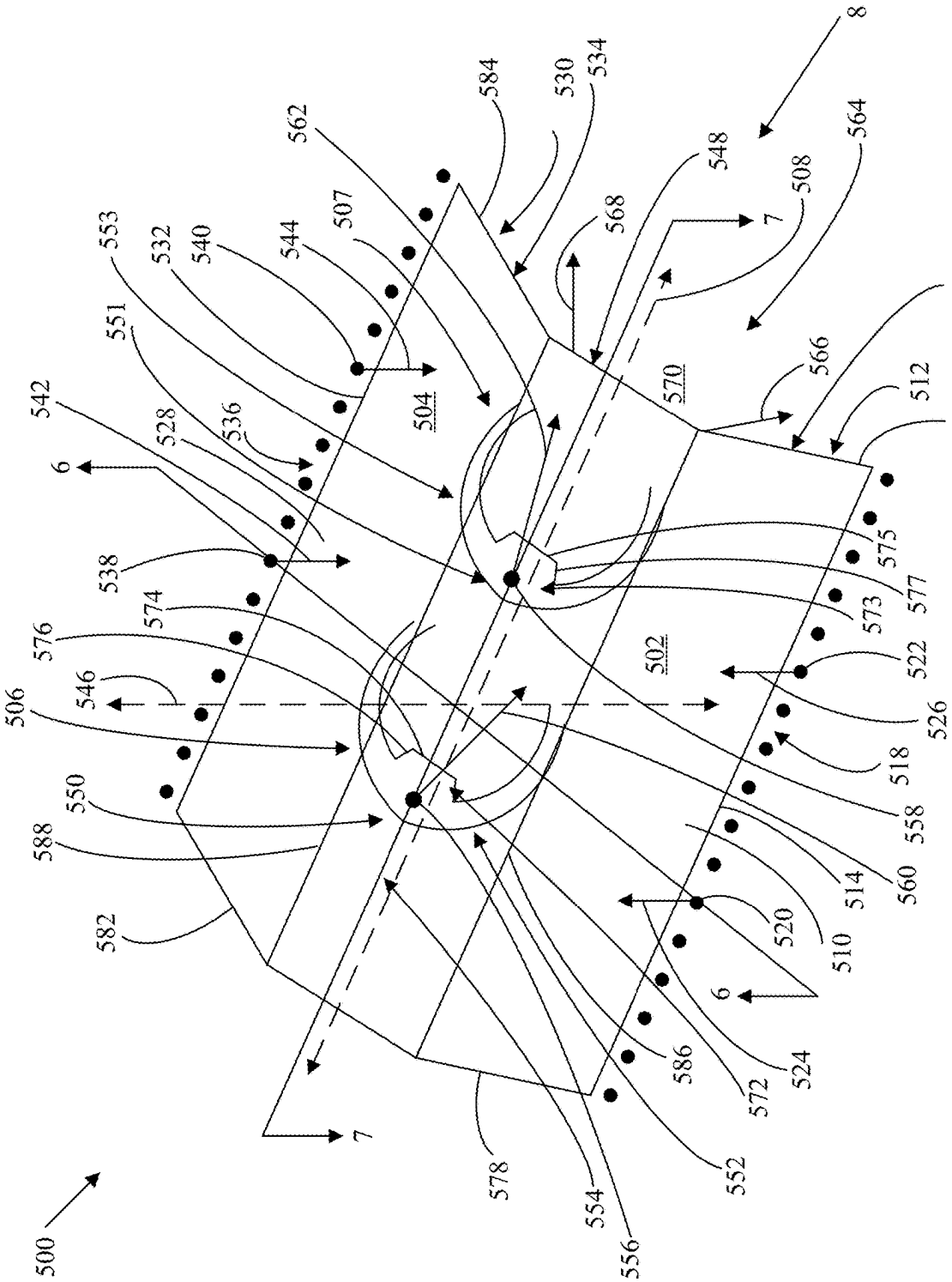
500
502
504
506
507
508
510
512
514
516
518
520
522
524
526
528
530
532
534
536
538
540
542
544
546
548
550
551
552
553
554
556
558
560
562
564
566
568
570
572
573
574
575
576
577
578
580
582
584
586
588
6
7
8

FIG. 5

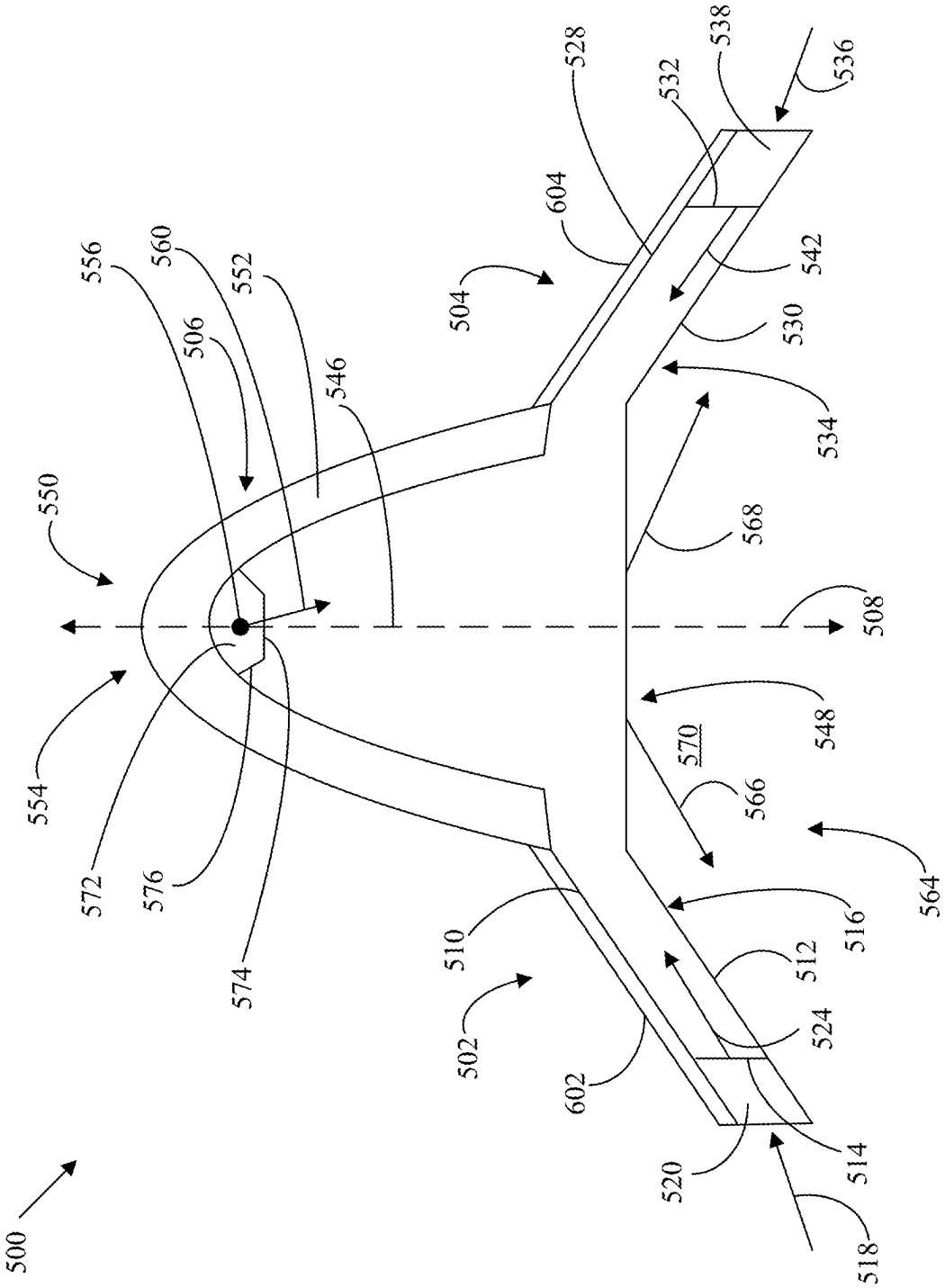
500
502
504
506
508
510
512
514
516
518
520
524
528
530
532
534
536
538
542
546
548
550
552
554
556
560
564
566
568
570
572
574
576
602
604

FIG. 6

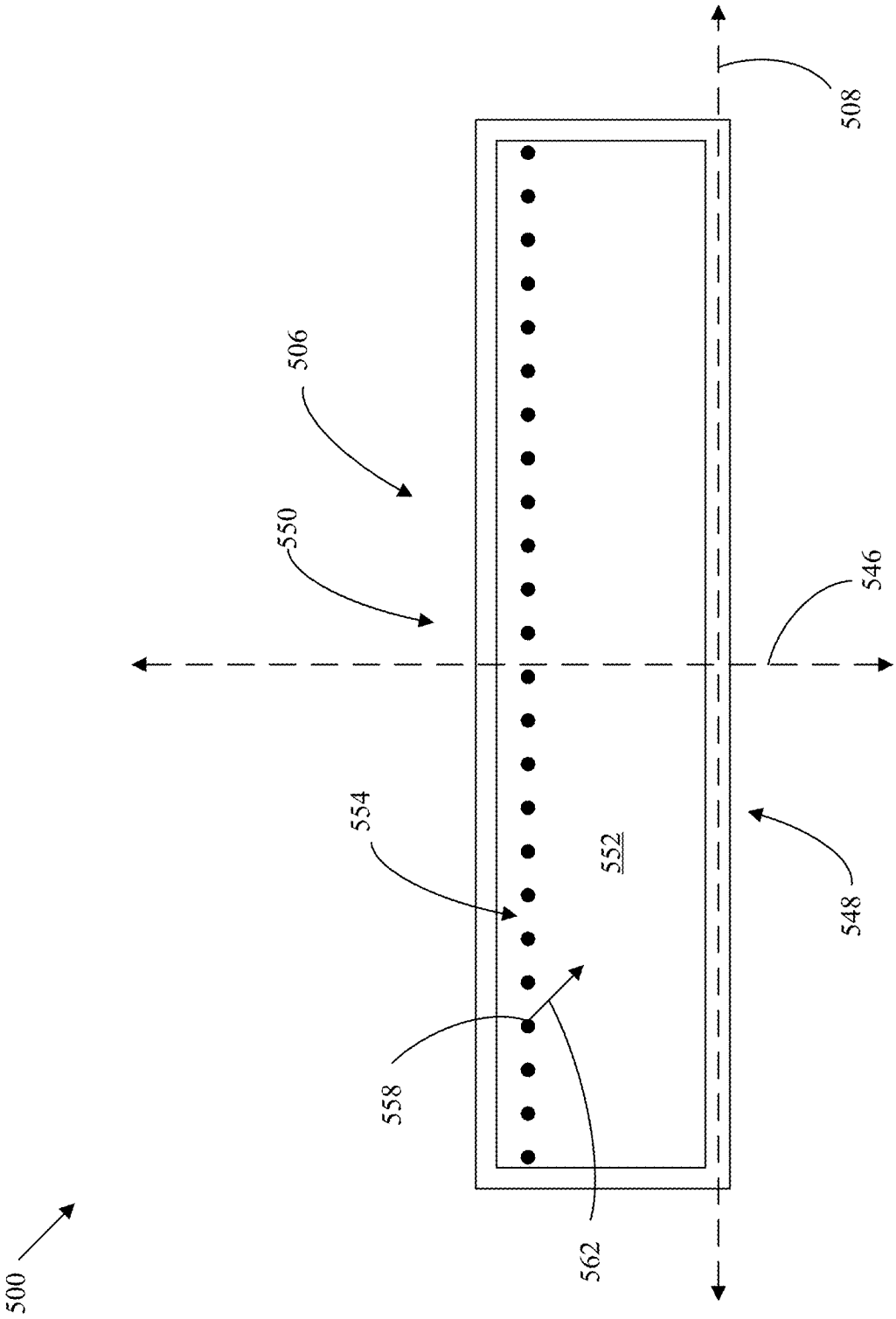

FIG. 7

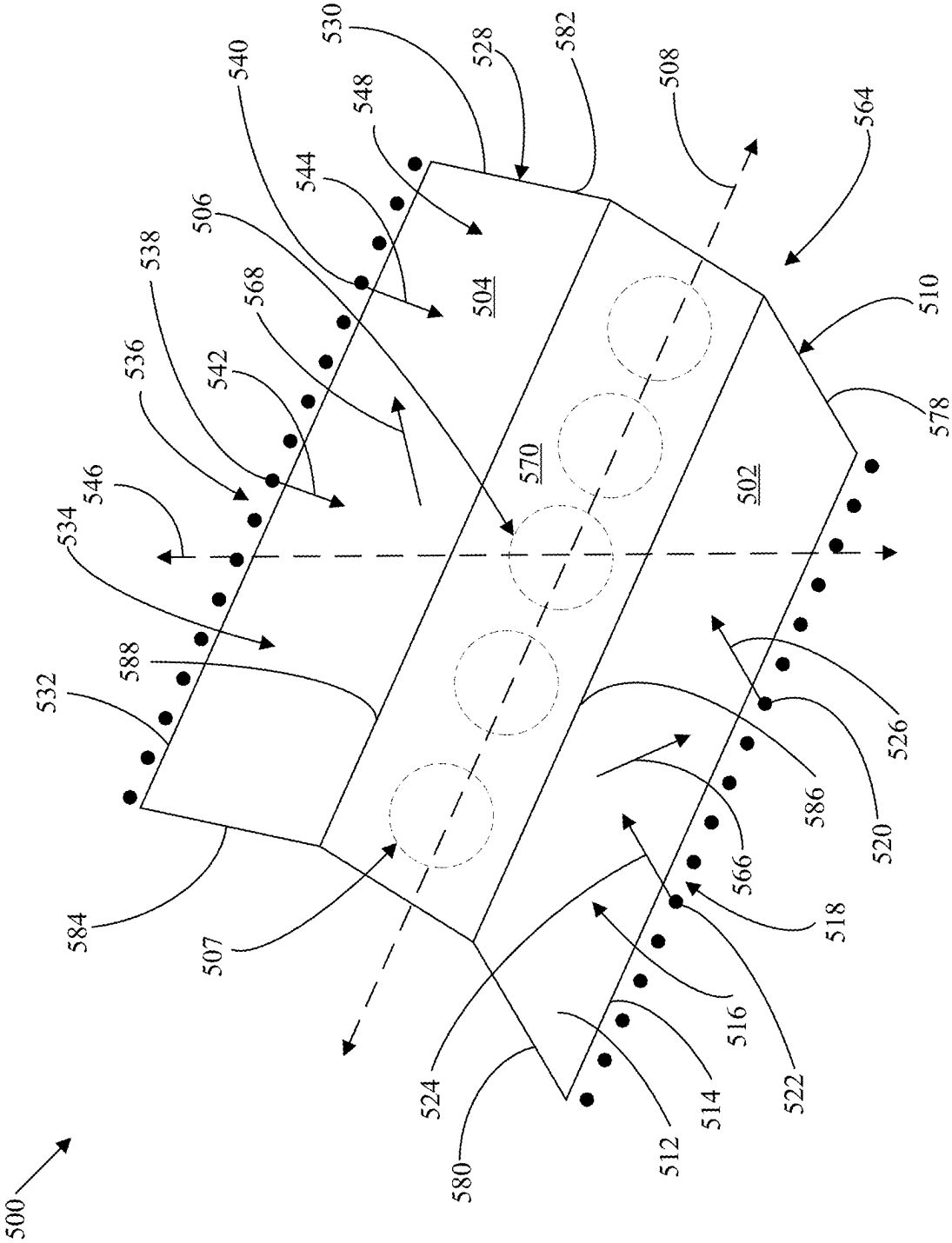
500
532
584
507
588
534
546
536
538
506
540
542
568
544
548
504
530
528
582
570
508
502
564
510
578
526
520
586
566
518
516
522
514
512
524
580

FIG. 8

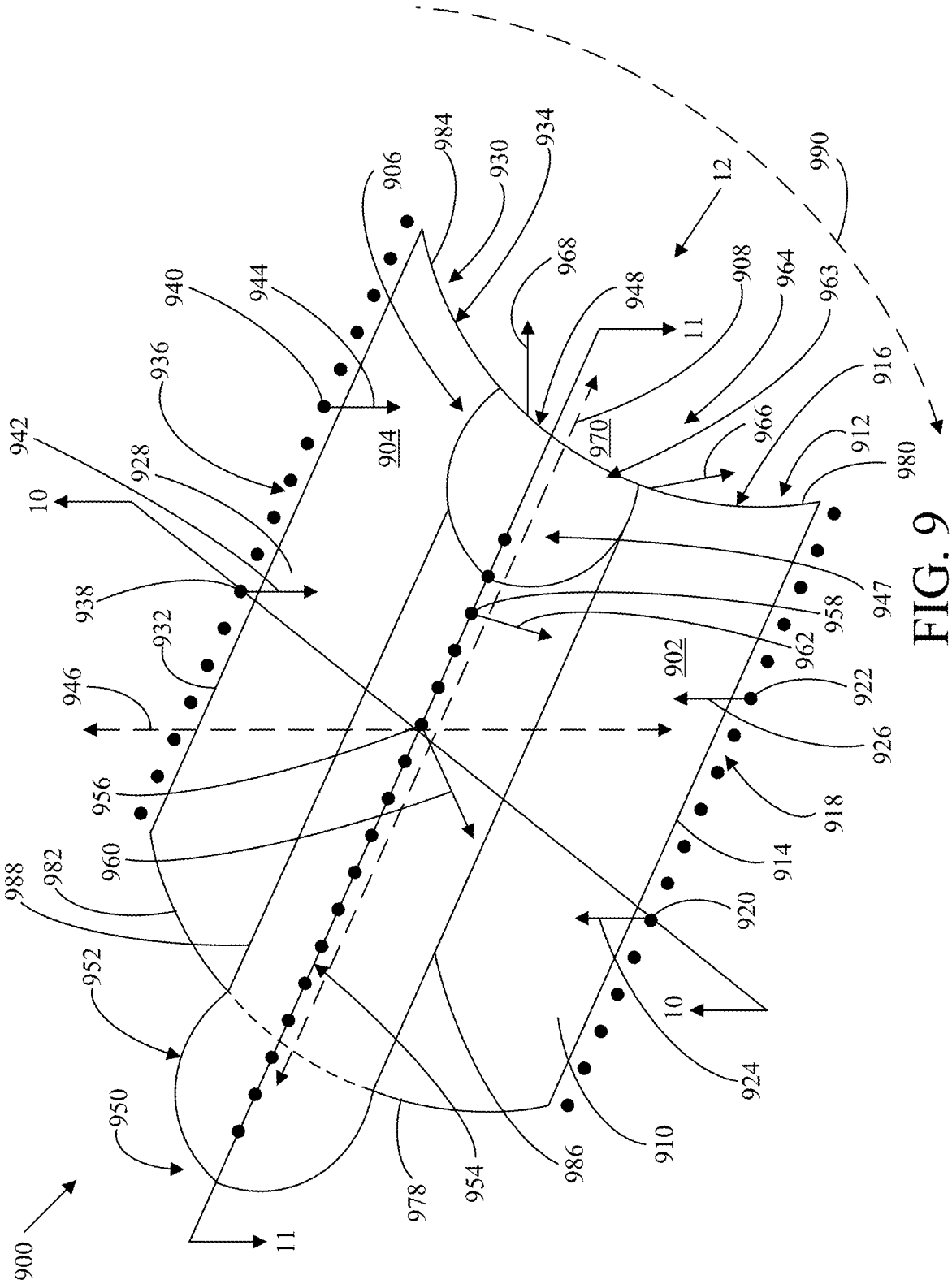
900
942
10
928
936
940
944
904
906
984
930
934
968
948
970
11
12
908
964
963
916
966
912
980
990
947
958
962
922
926
902
938
932
946
956
960
988
982
952
950
978
954
986
910
924
920
914
918
10
11

FIG. 9

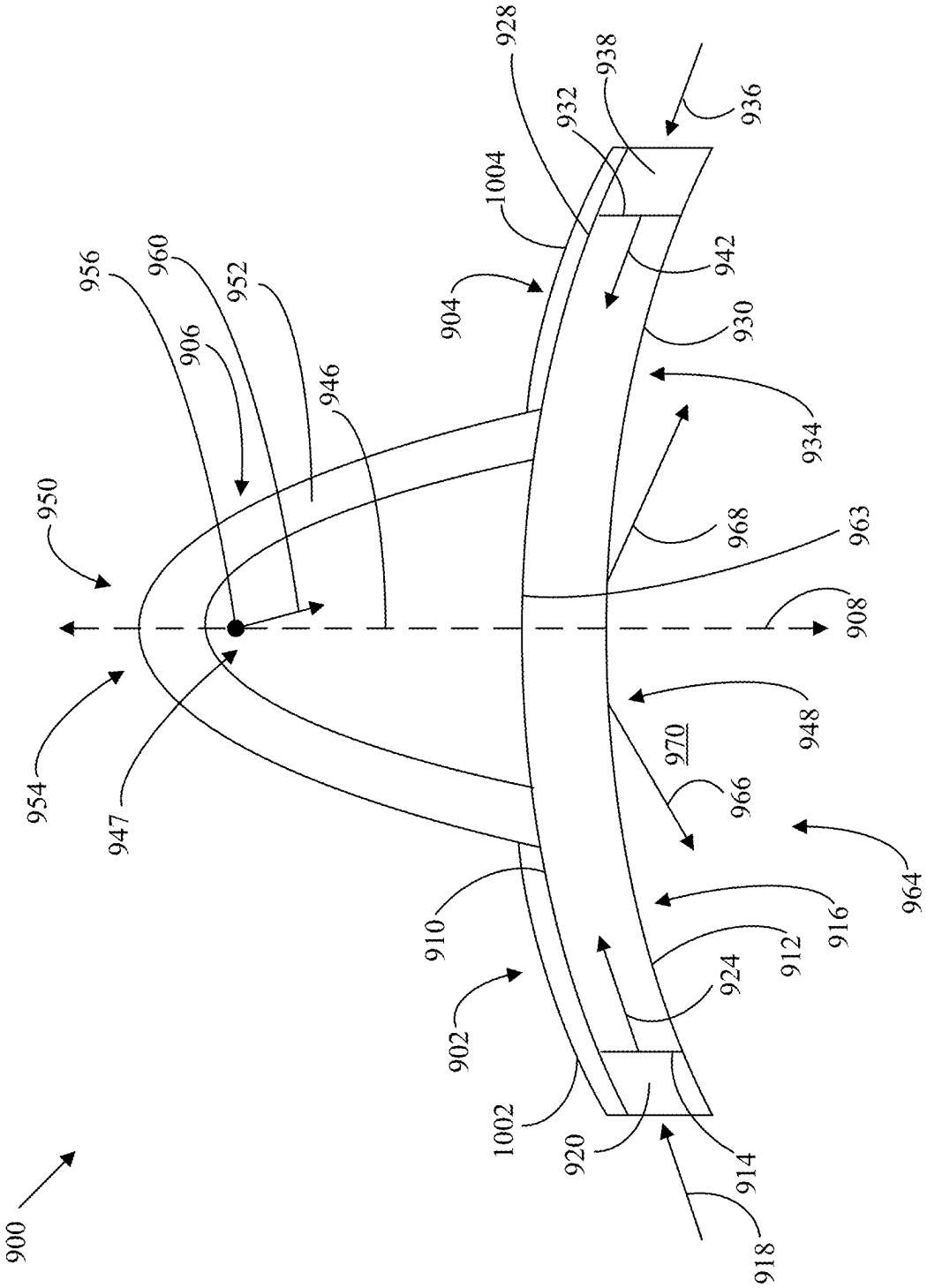
900
950
954
947
956
906
960
952
946
904
1004
928
932
938
936
942
930
934
968
963
908
948
970
966
964
916
912
924
910
902
1002
920
914
918

FIG. 10

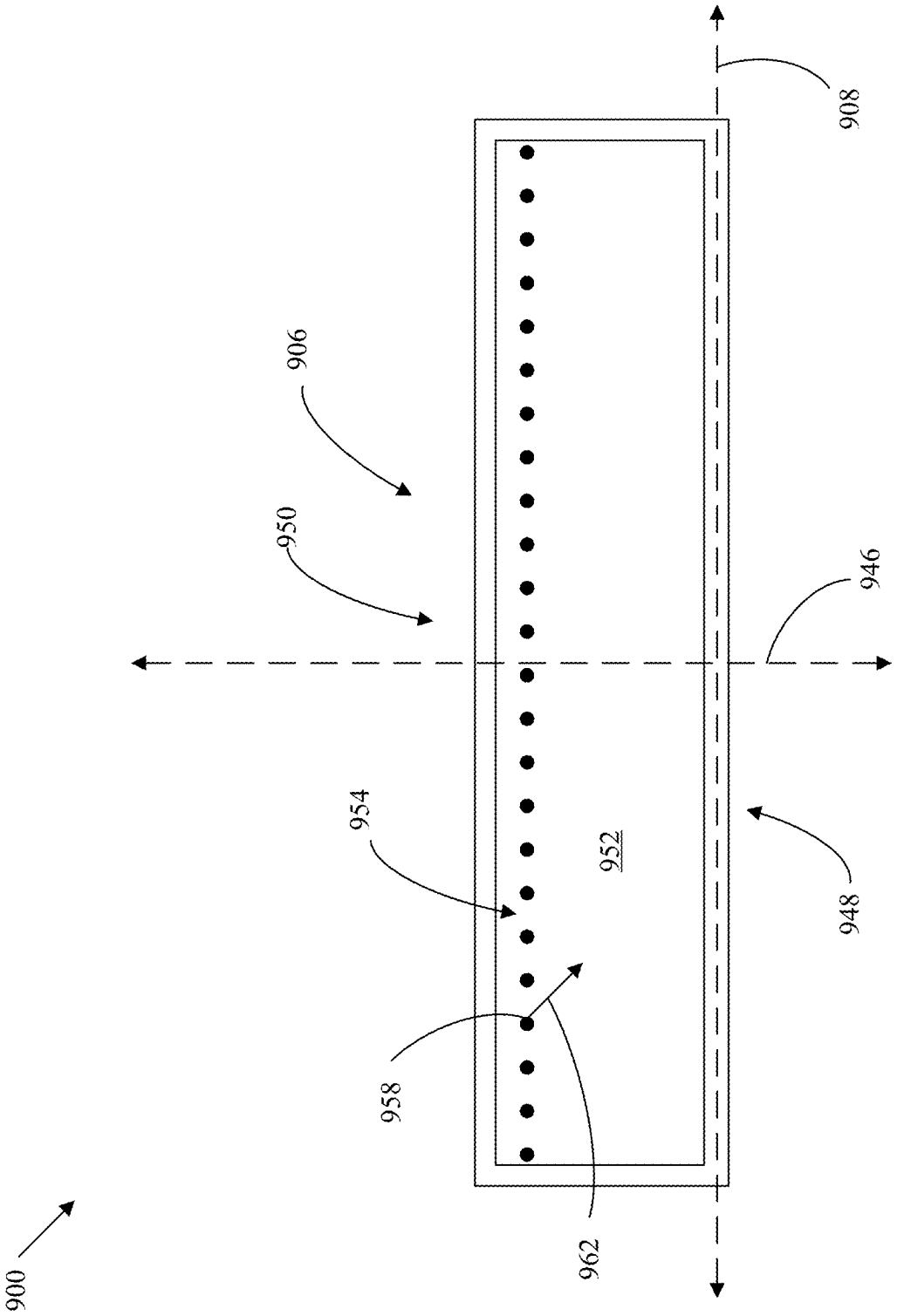

FIG. 11

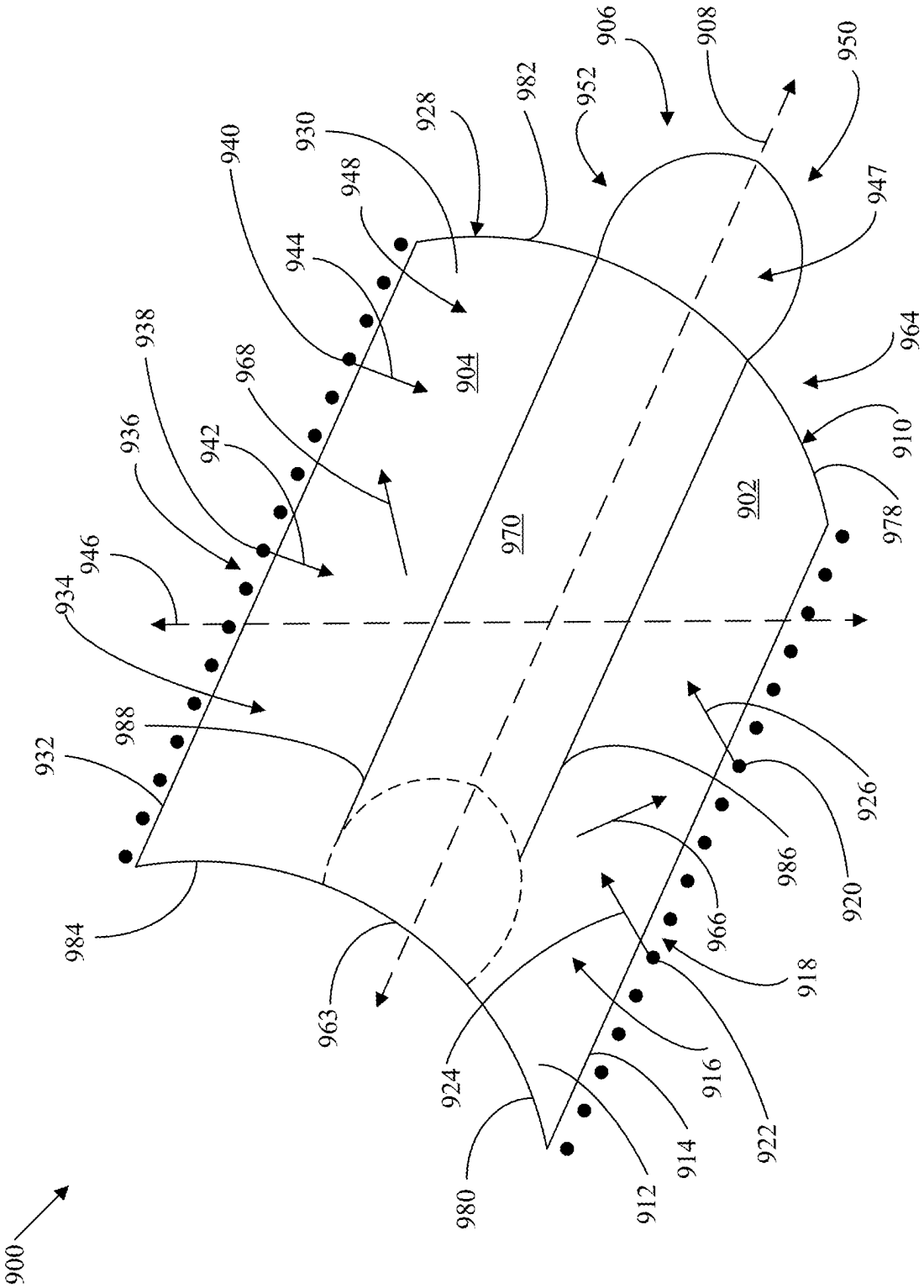
900
984
932
988
934
946
936
938
942
968
940
944
948
930
928
982
952
906
908
950
947
964
910
978
904
970
902
963
924
980
912
914
916
922
918
966
986
920
926

FIG. 12

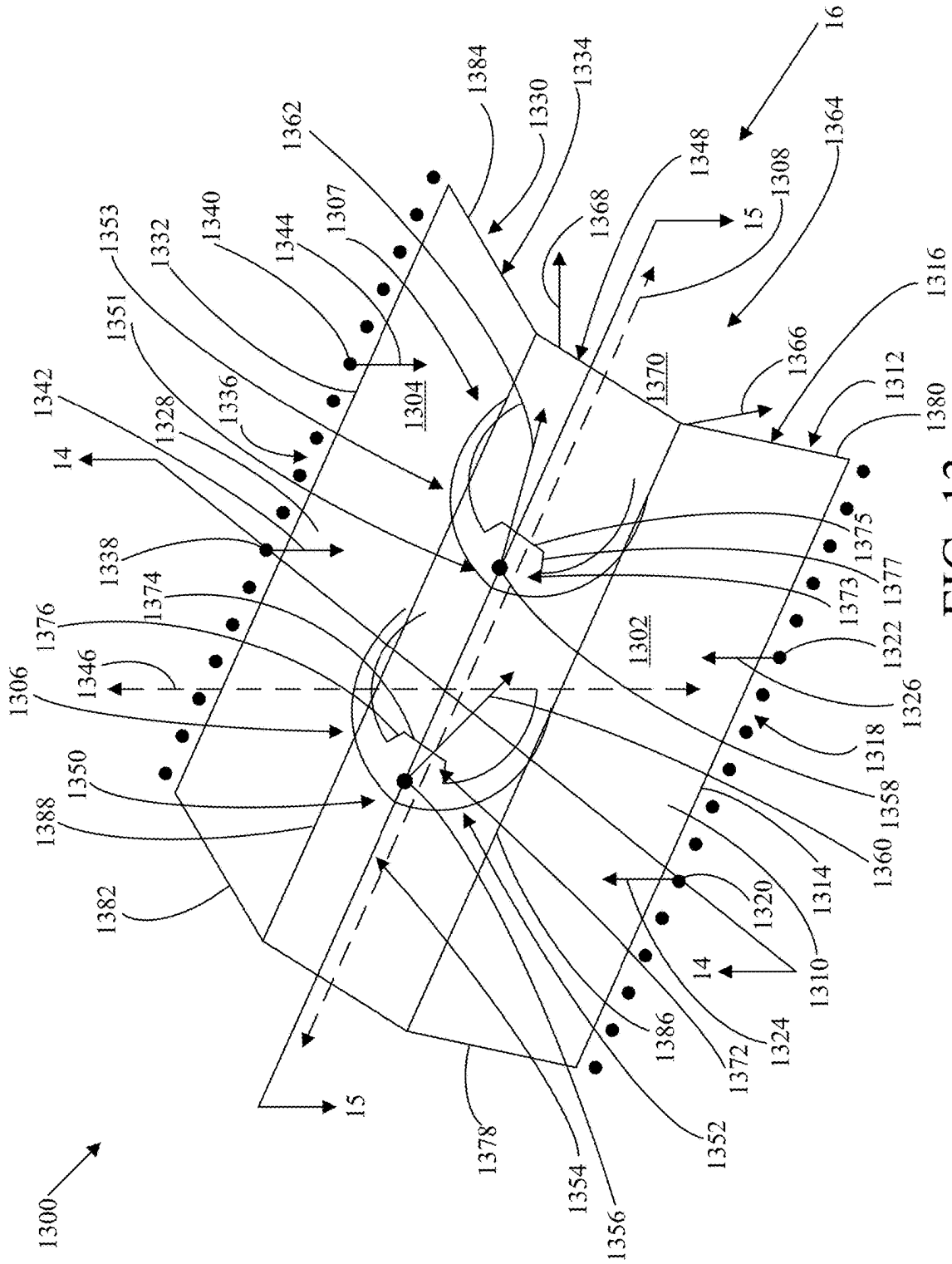
1300
1302
1304
1306
1307
1308
1310
1312
1314
1316
1318
1320
1322
1324
1326
1328
1330
1332
1334
1336
1338
1340
1342
1344
1346
1348
1350
1351
1352
1353
1354
1356
1358
1360
1362
1364
1366
1368
1370
1372
1373
1374
1375
1376
1377
1378
1380
1382
1384
1386
1388
14
15
16

FIG. 13

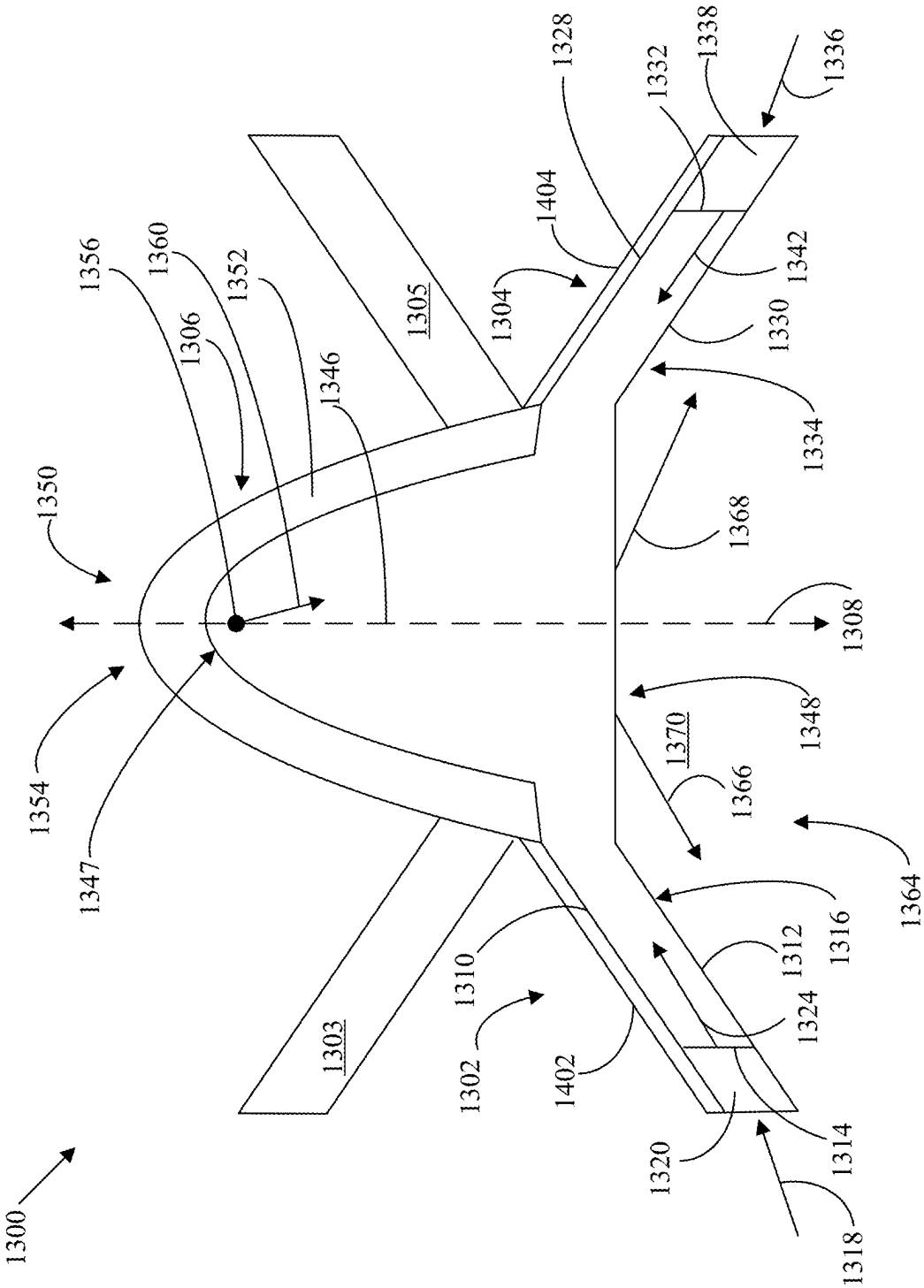
1300
1350
1354
1347
1356
1306
1360
1352
1346
1305
1303
1304
1404
1328
1332
1338
1336
1342
1330
1334
1368
1308
1348
1370
1366
1364
1316
1312
1324
1310
1302
1402
1320
1314
1318

FIG. 14

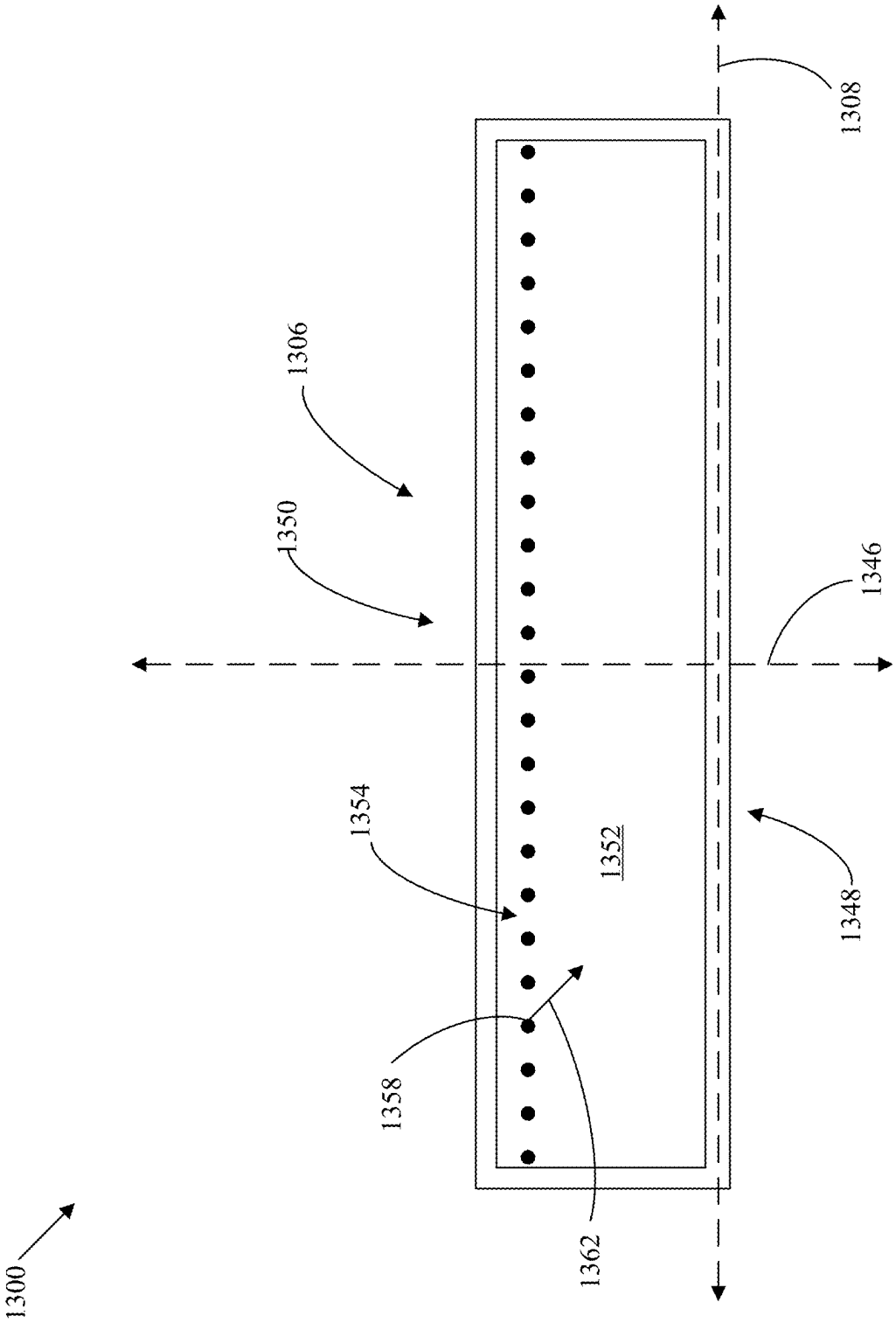

FIG. 15

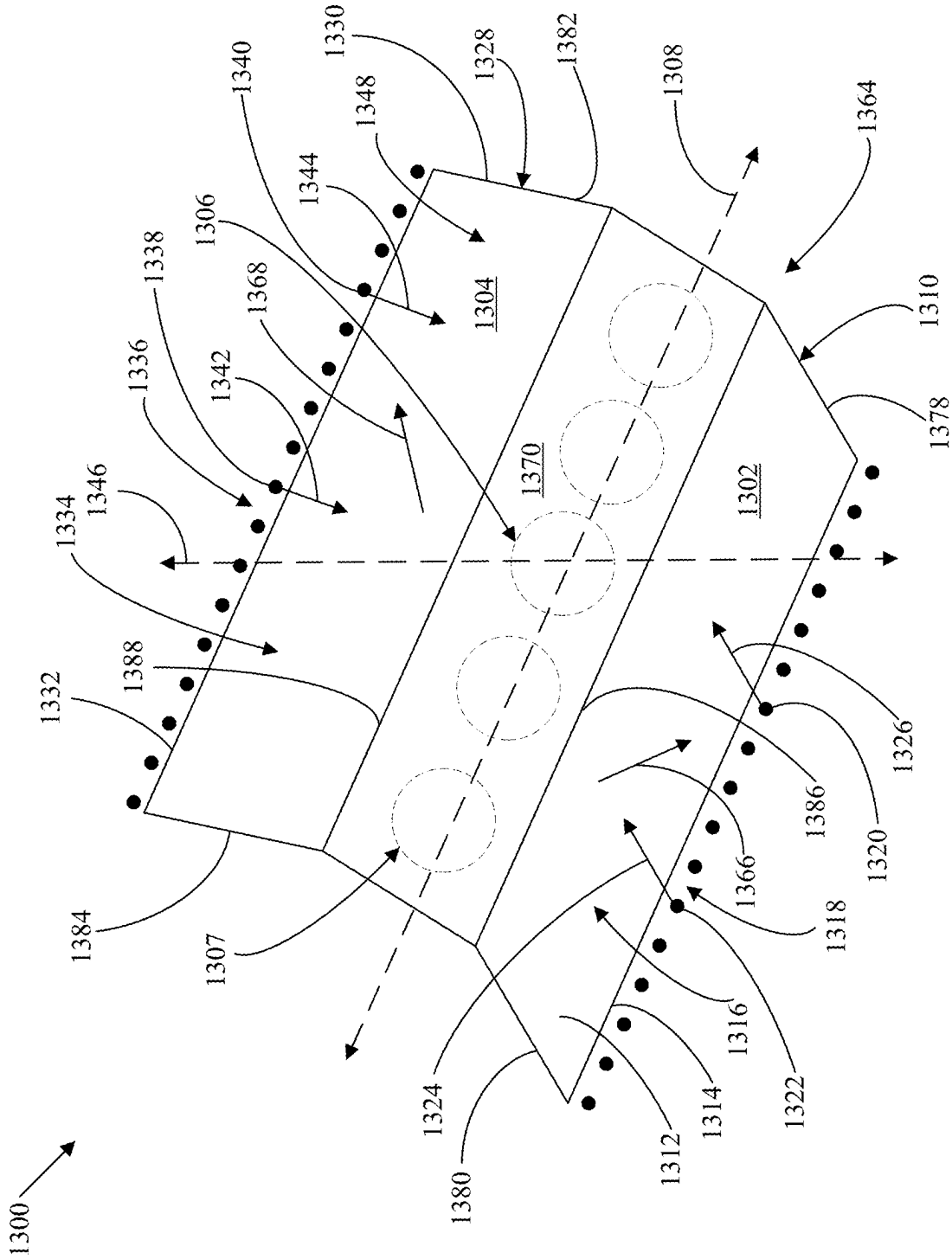
1300
1332
1384
1388
1334
1346
1336
1338
1342
1368
1306
1340
1344
1348
1330
1328
1382
1308
1364
1310
1378
1304
1370
1302
1307
1324
1380
1312
1314
1316
1322
1318
1366
1386
1320
1326

FIG. 16

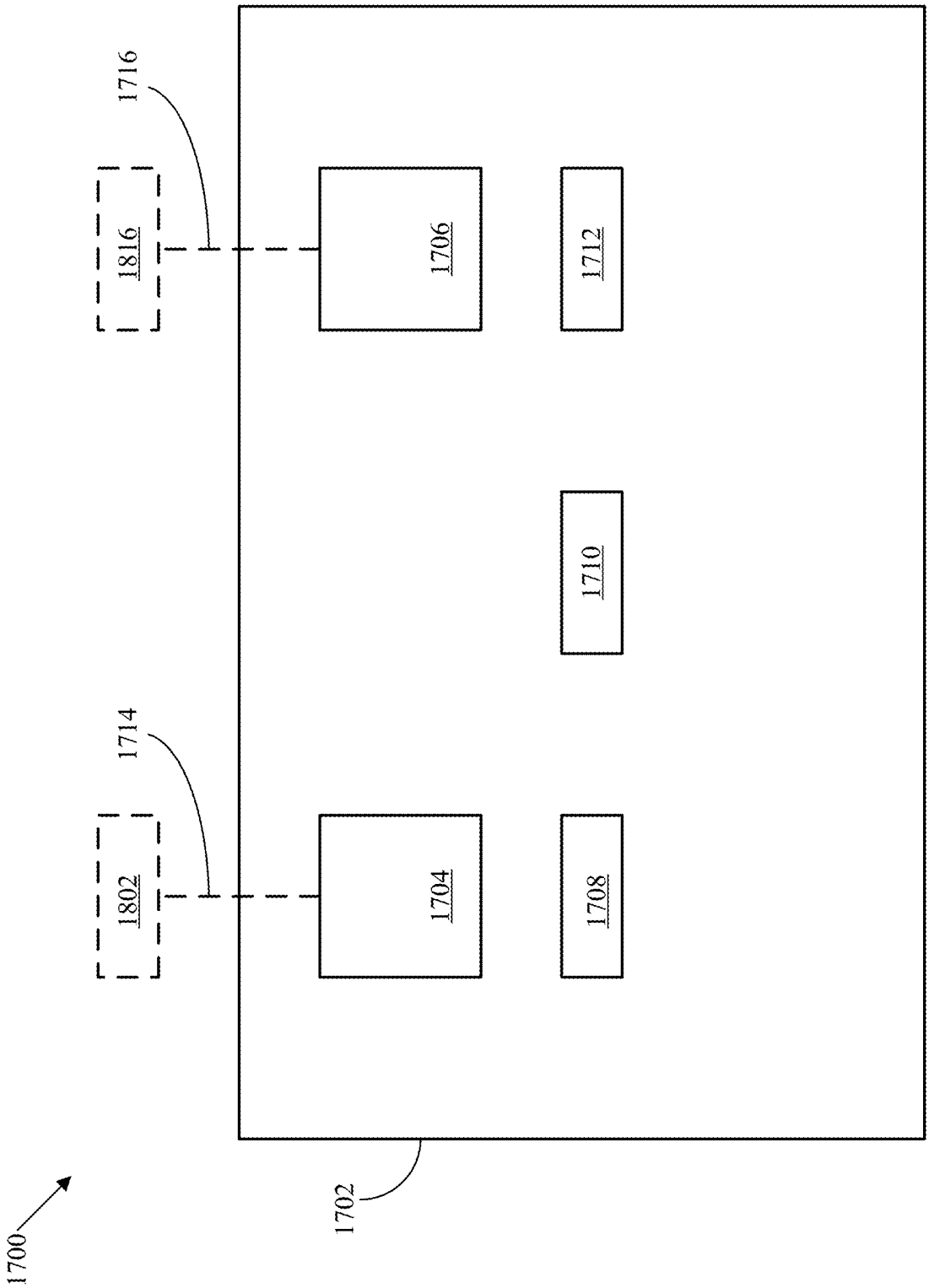

FIG. 17

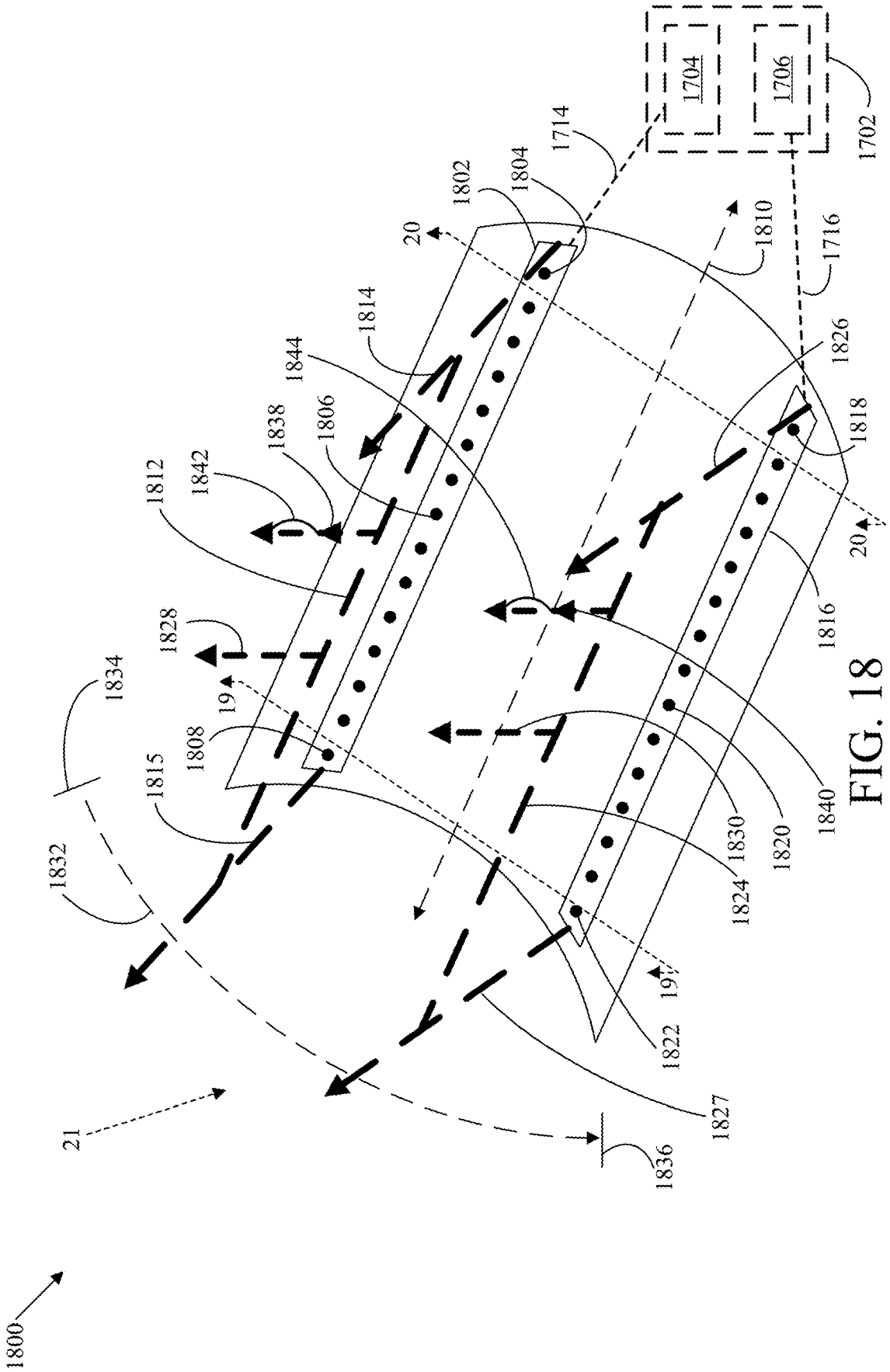
1800
1702
1704
1706
1714
1716
1802
1804
1806
1808
1810
1812
1814
1815
1816
1818
1820
1822
1824
1826
1827
1828
1830
1832
1834
1836
1838
1840
1842
1844
20
19
21

FIG. 18

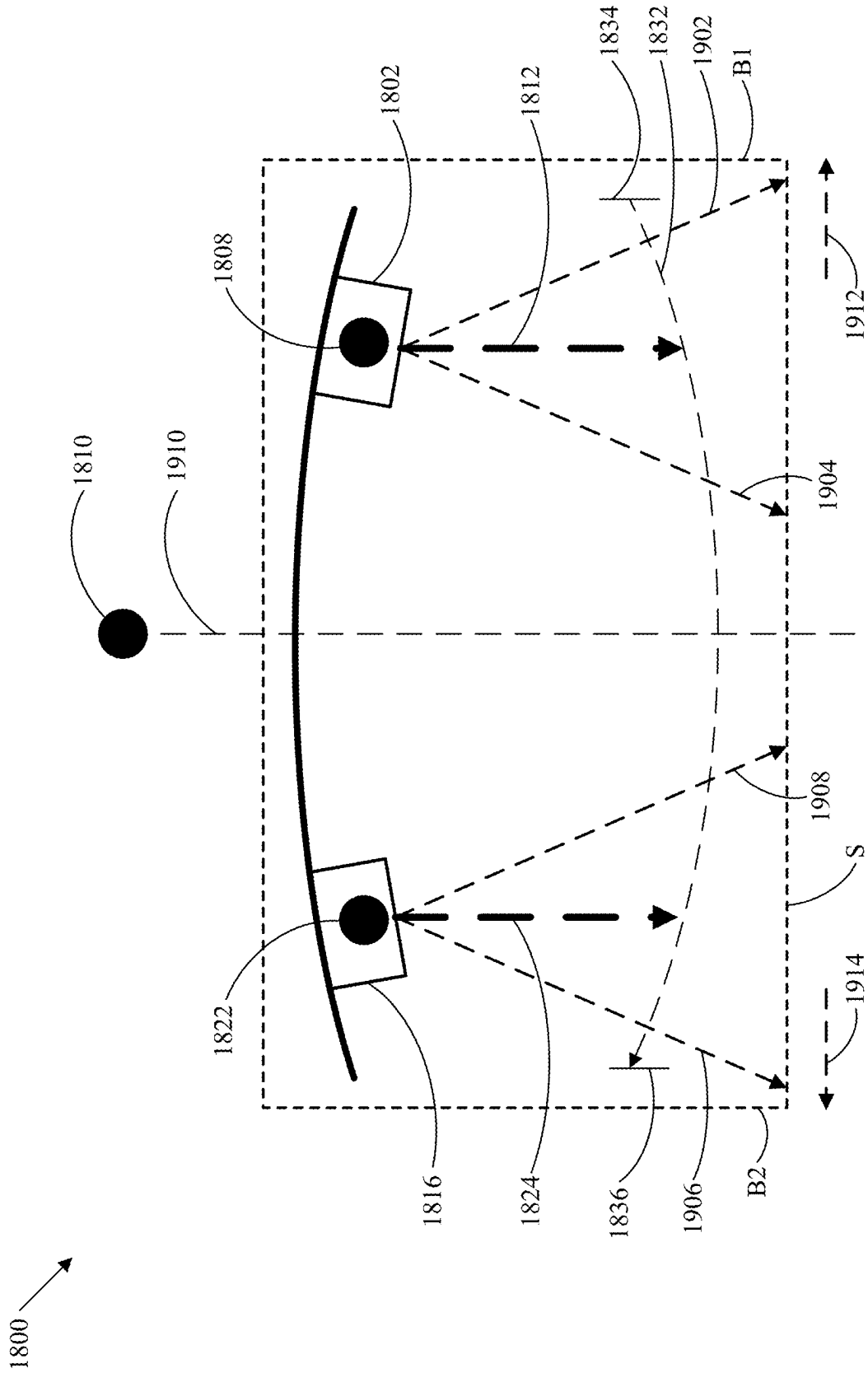
1800
1810
1910
1808
1802
1812
1834
1832
1902
B1
1912
1904
1908
S
1914
1822
1816
1824
1836
1906
B2

FIG. 19

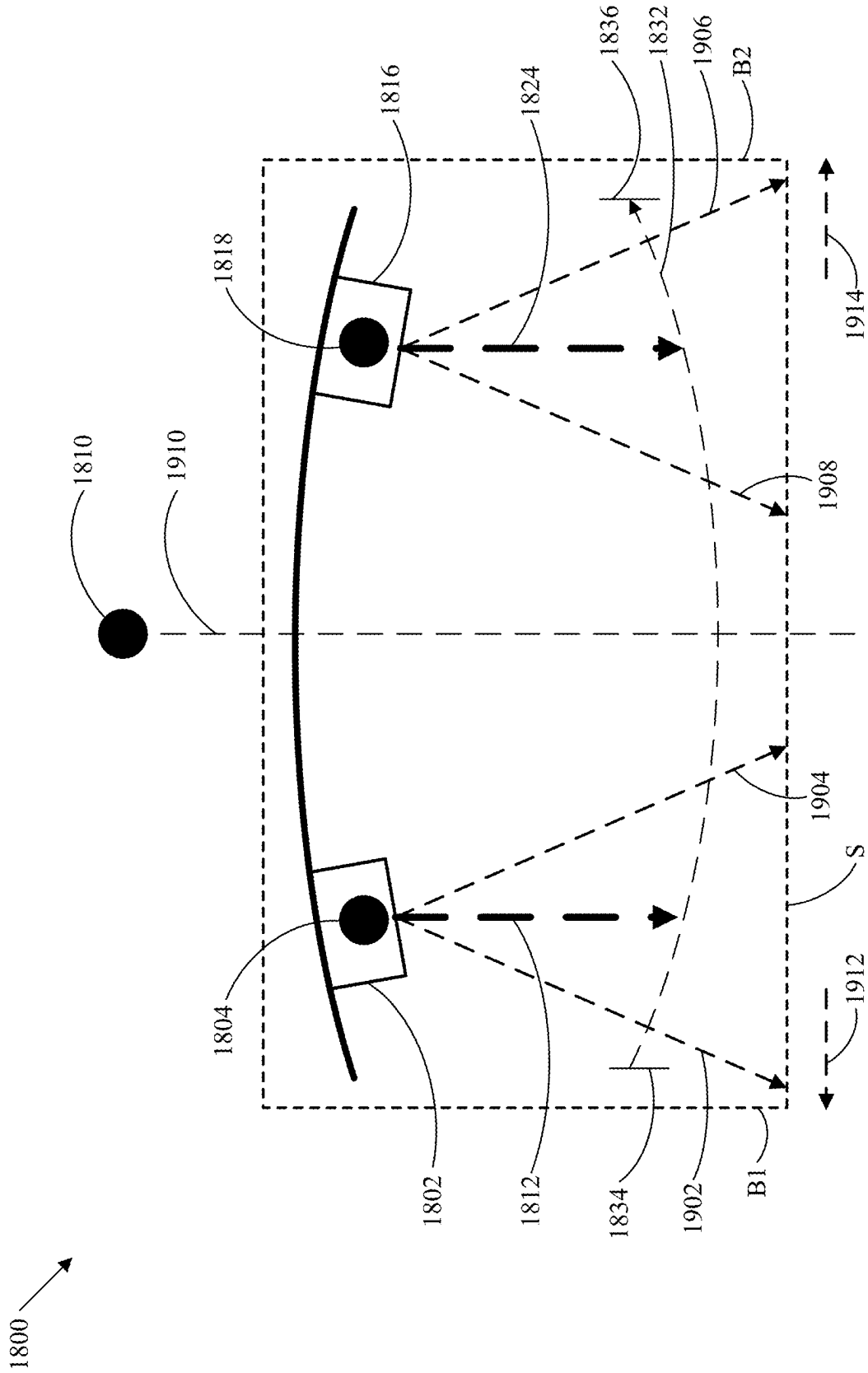
1800
1810
1910
1818
1816
1824
1836
1832
1906
B2
1914
1908
1904
S
1912
1804
1802
1812
1834
1902
B1

FIG. 20

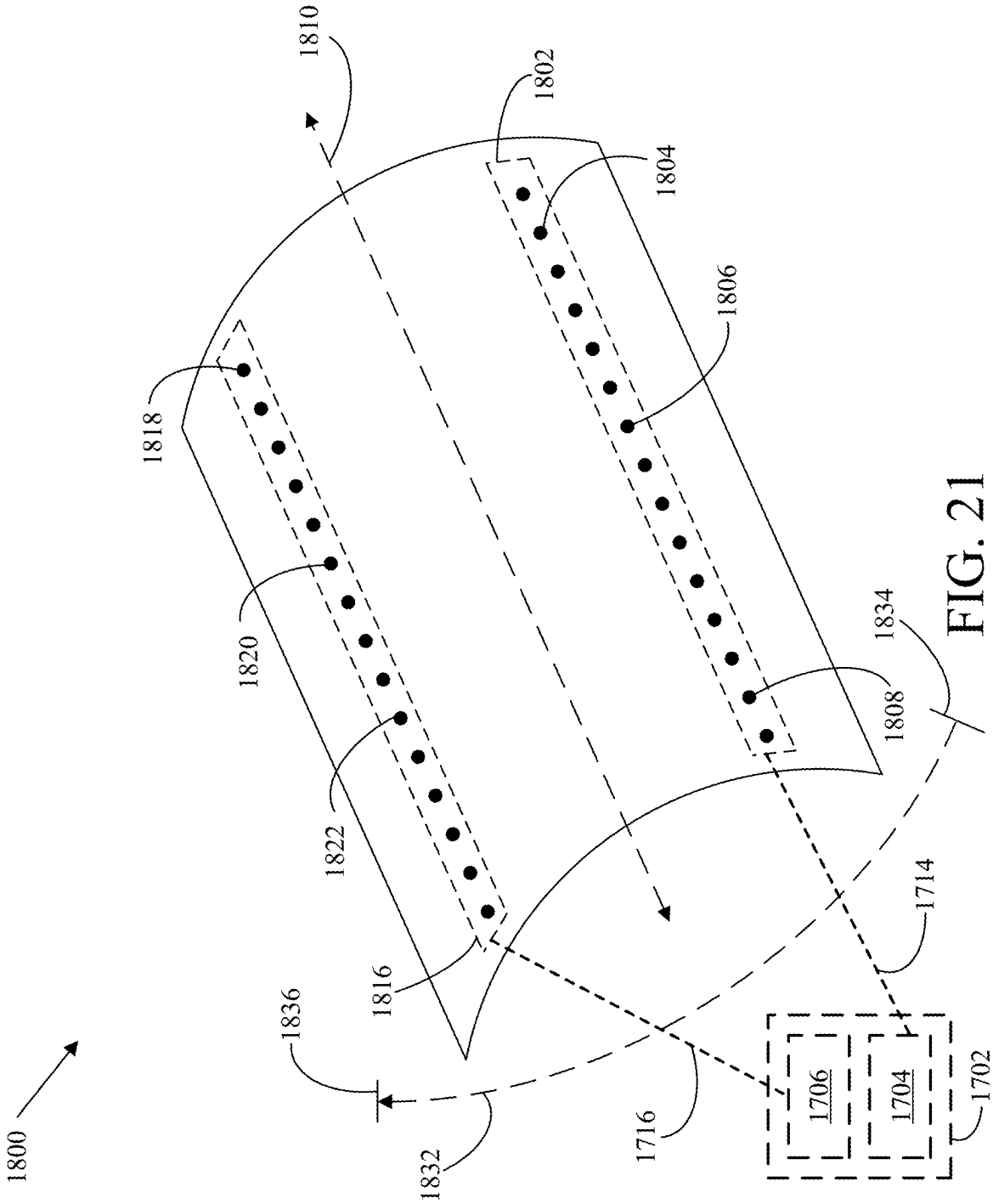
1800
1810
1802
1804
1806
1818
1820
1822
1816
1836
1832
1716
1706
1704
1702
1714
1808
1834

FIG. 21

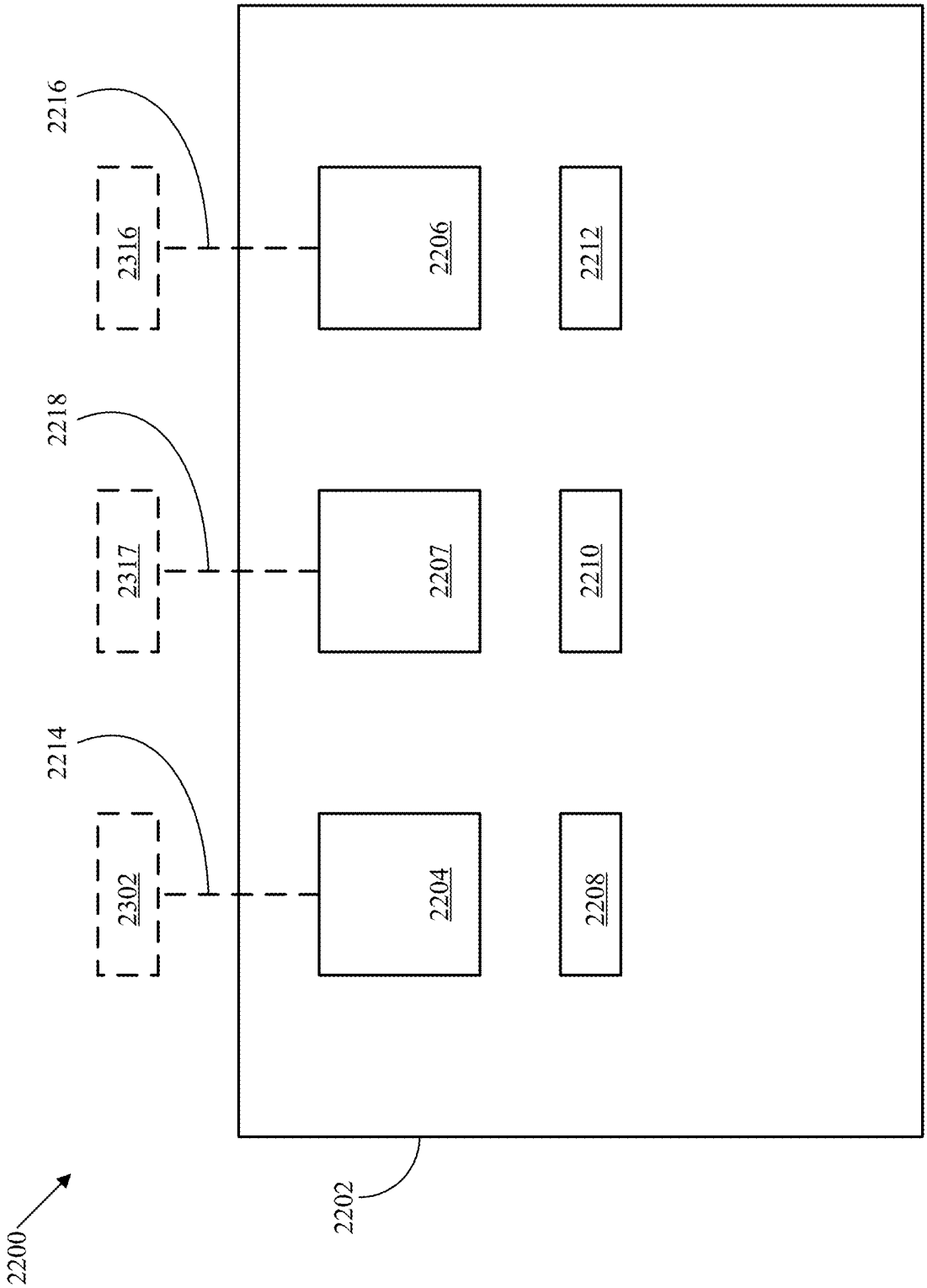
2200
2202
2214
2302
2204
2208
2218
2317
2207
2210
2216
2316
2206
2212

FIG. 22

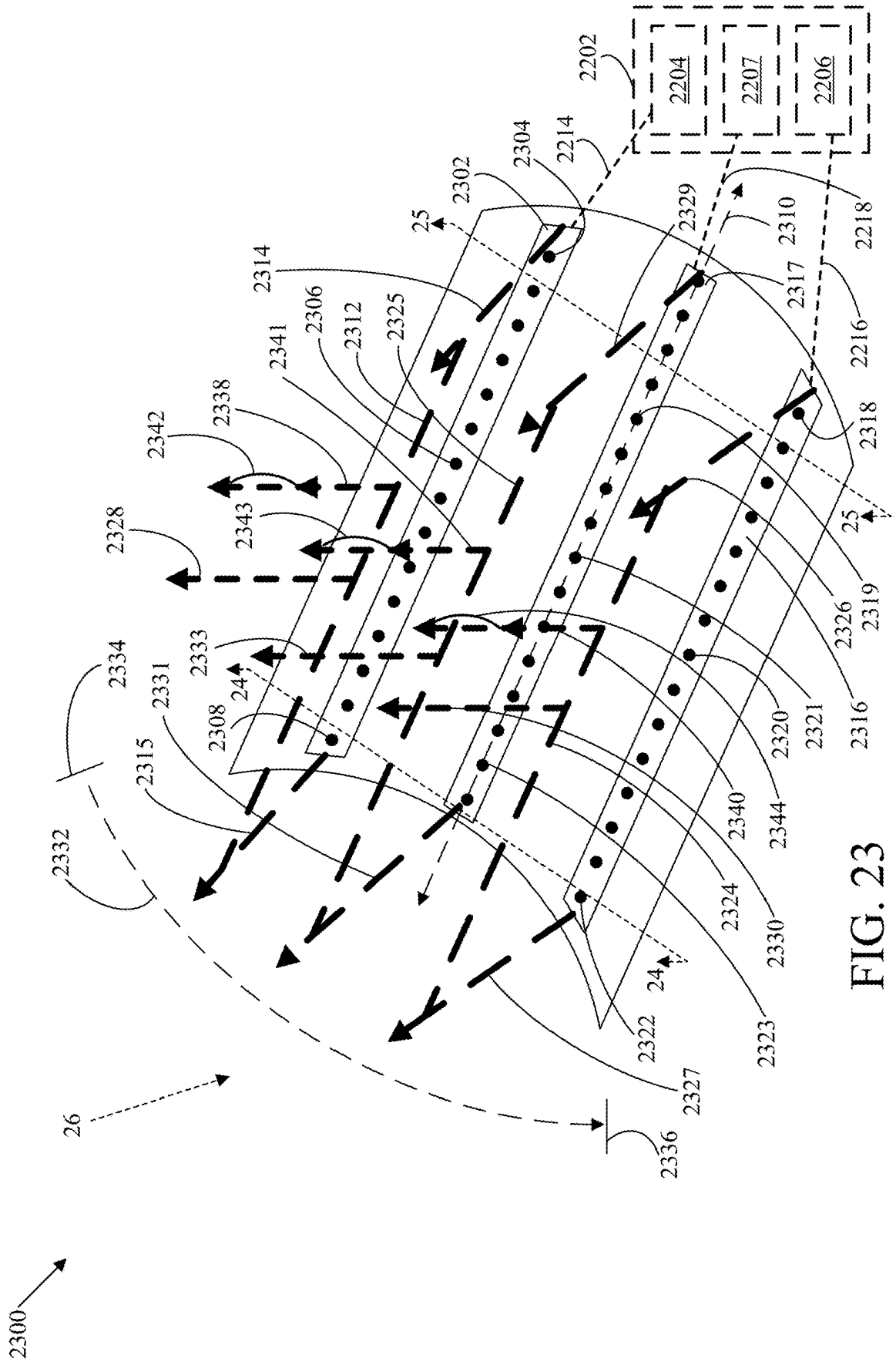
2300
2202
2204
2207
2206
2214
2304
2302
25
2329
2310
2218
2314
2317
2216
2306
2312
2325
2341
2338
2342
2318
2328
2343
25
2326
2319
2333
2334
2331
24
2308
2320
2321
2316
2315
2340
2344
2332
2324
2330
24
2322
2323
2327
26
2336

FIG. 23

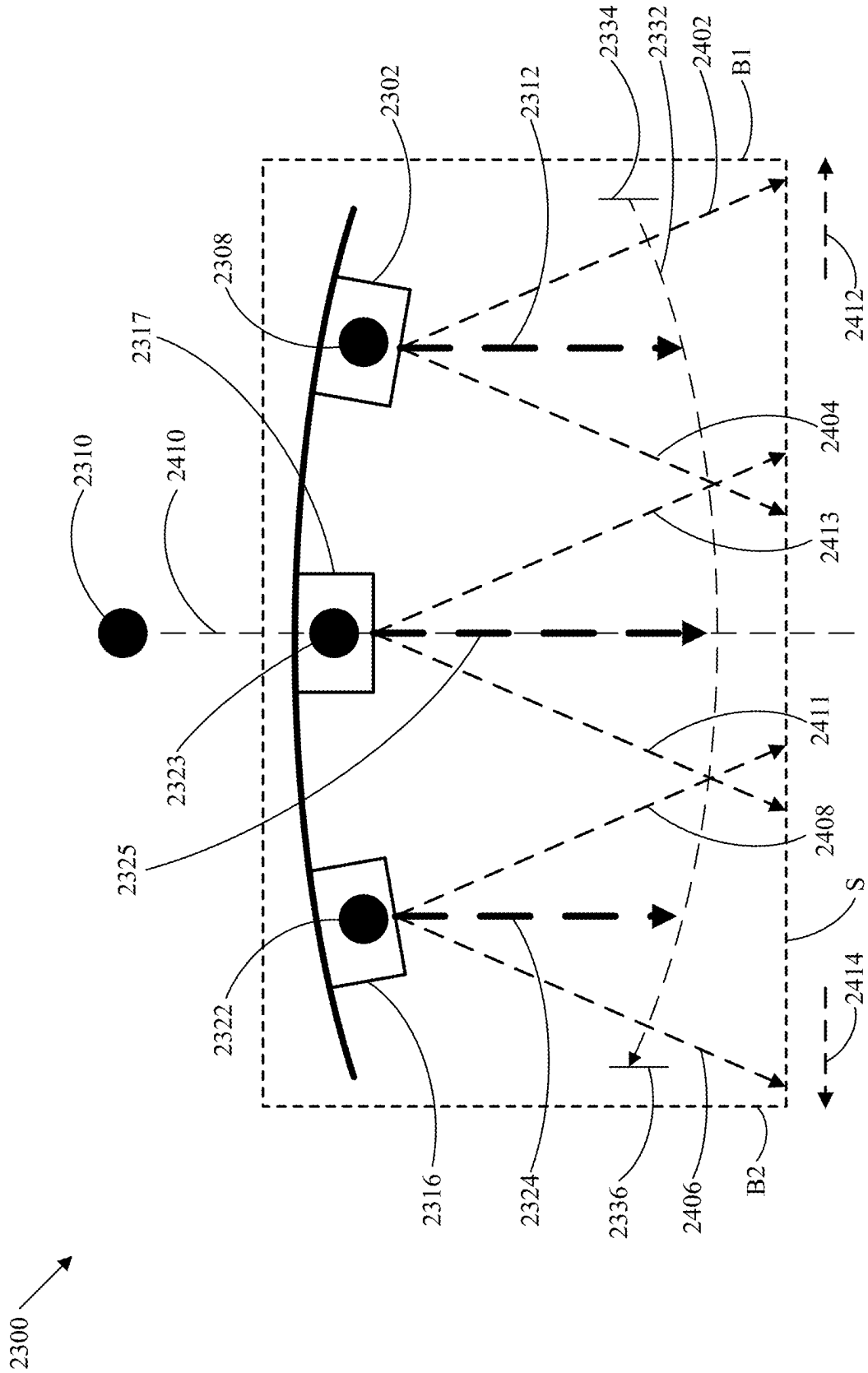
2300
2310
2410
2317
2308
2302
2312
2334
2332
2402
B1
2412
2404
2413
2411
2408
S
2414
B2
2406
2336
2324
2316
2322
2325
2323

FIG. 24

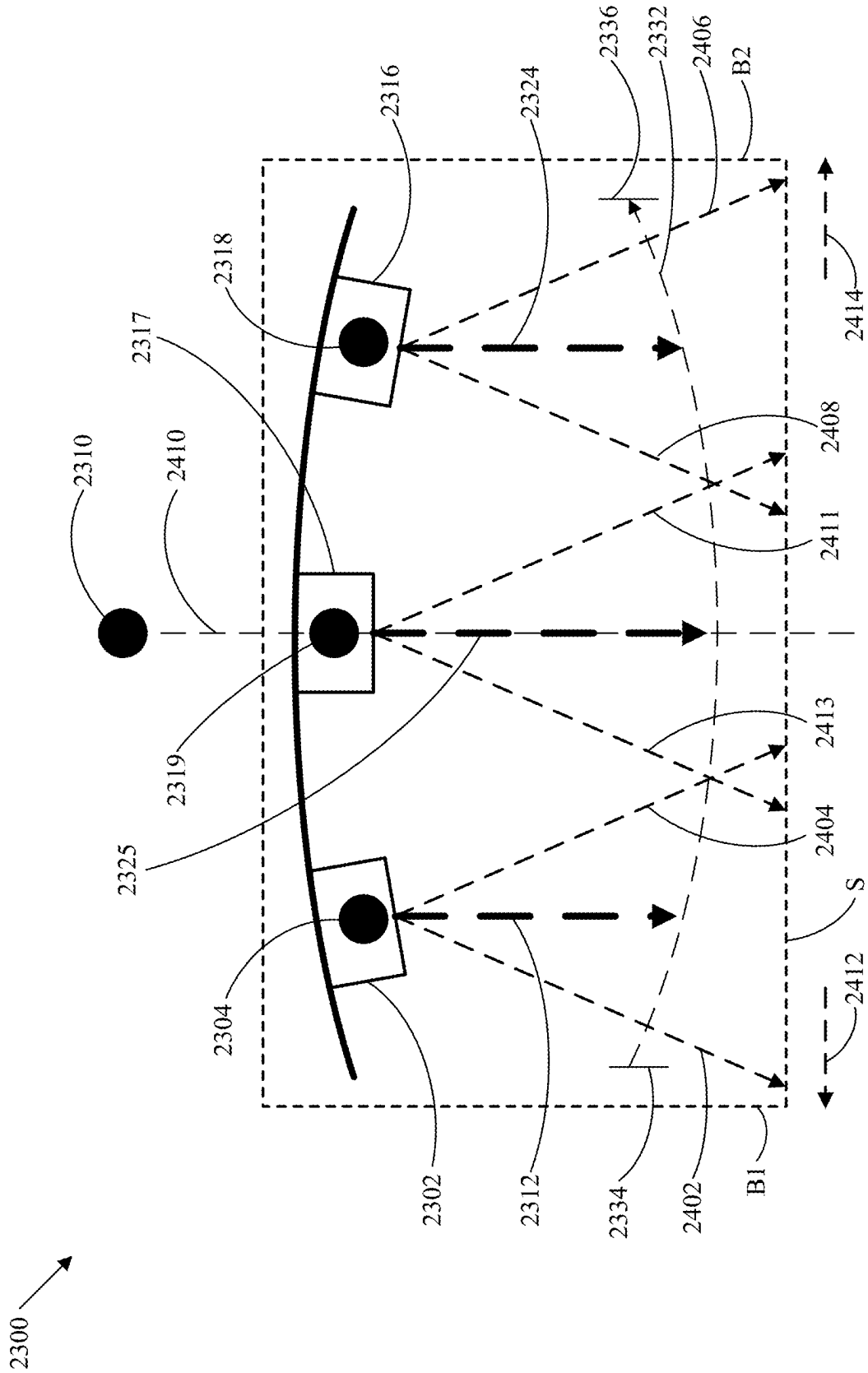
2300
2310
2410
2317
2318
2316
2324
2336
2332
2406
B2
2414
2408
2411
2319
2325
2413
2404
S
2412
2304
2302
2312
2334
2402
B1

FIG. 25

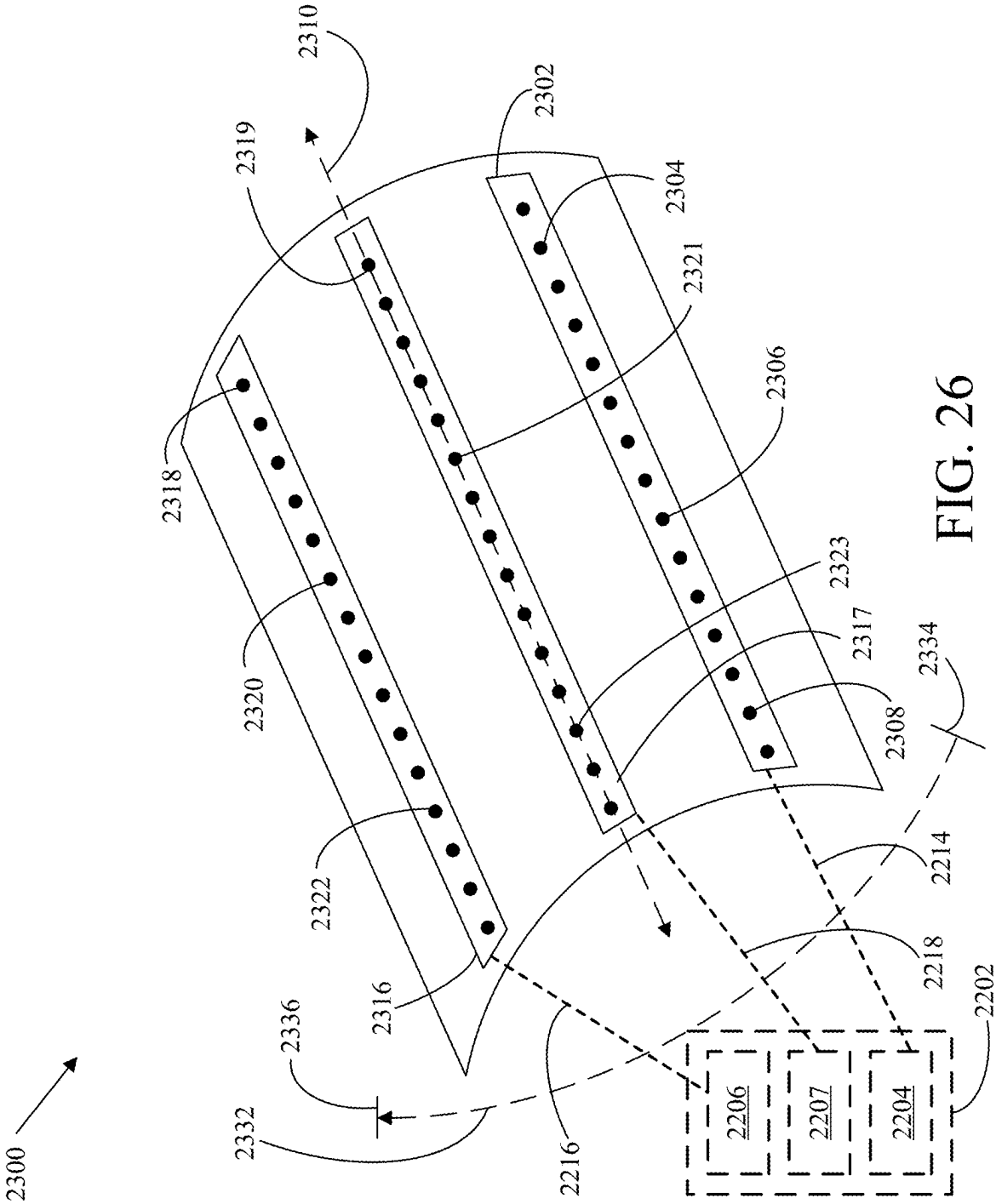
2300
2310
2319
2318
2320
2322
2332
2336
2316
2216
2302
2304
2321
2306
2323
2317
2308
2334
2214
2218
2202
2206
2207
2204

FIG. 26

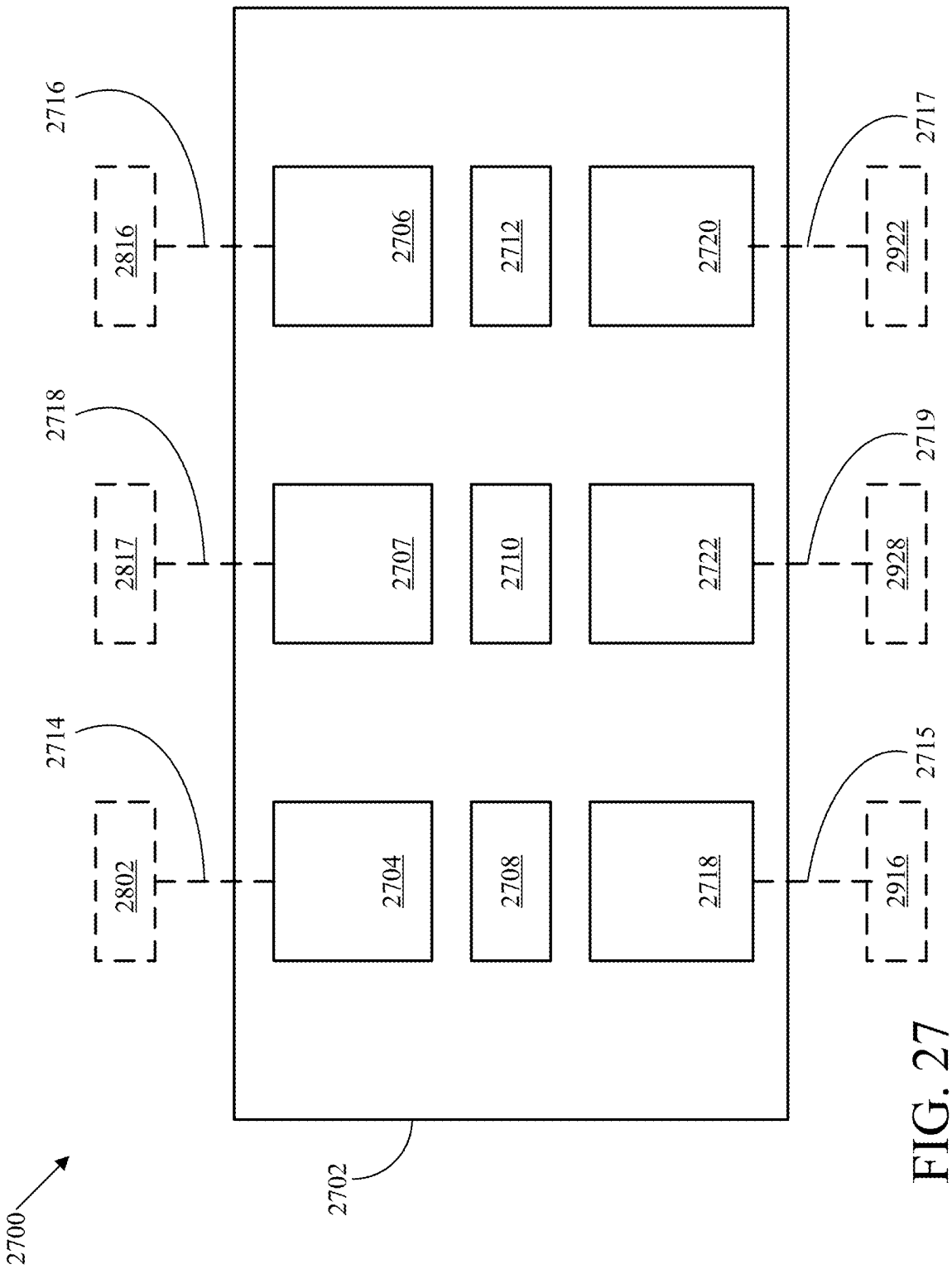
2700
2702
2714
2802
2704
2708
2718
2916
2715
2718
2817
2707
2710
2722
2928
2719
2716
2816
2706
2712
2720
2922
2717

FIG. 27

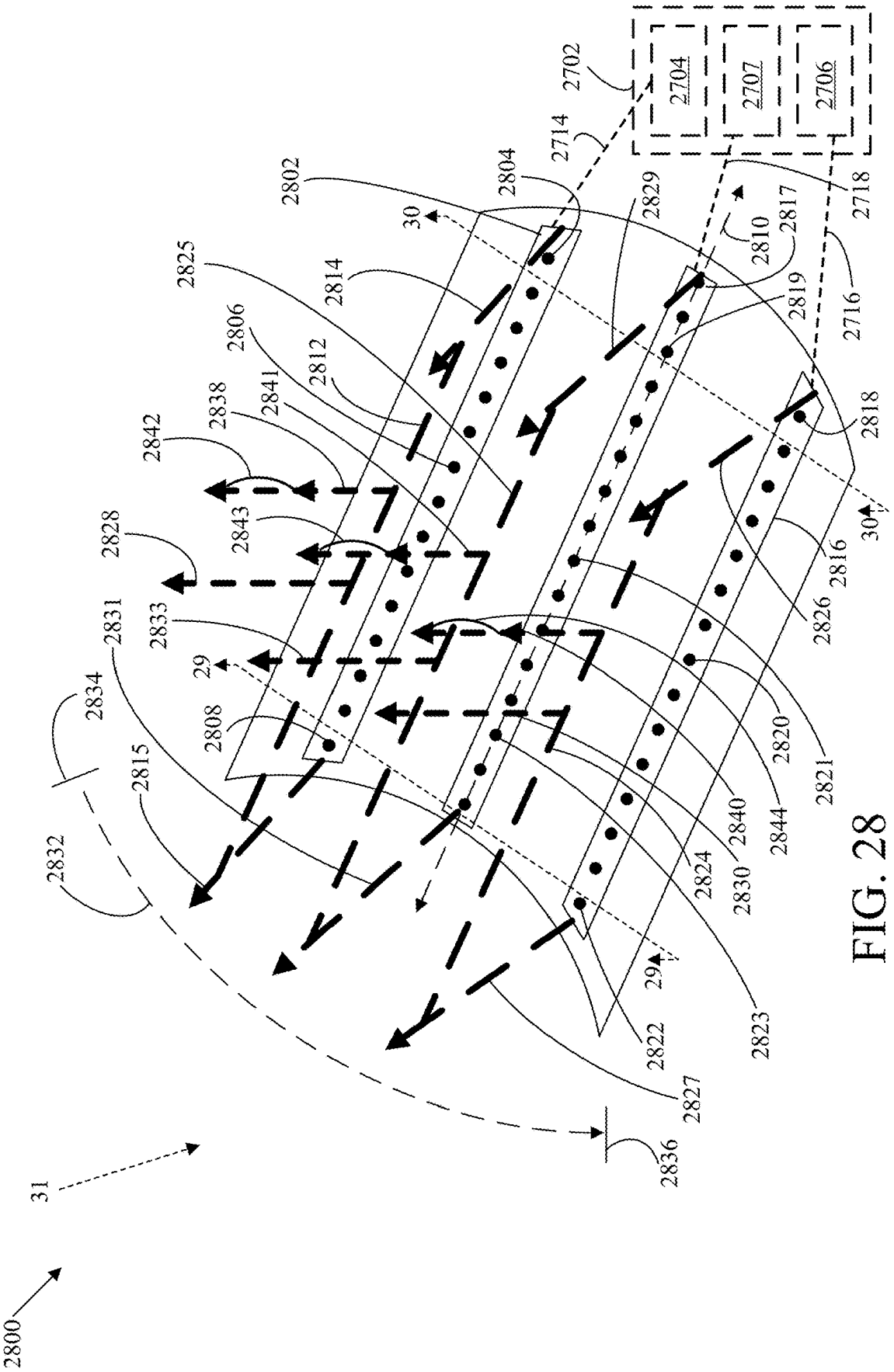
2800
31
2832
2834
2815
2831
2833
29
2808
2828
2842
2843
2838
2841
2812
2806
2825
2814
2802
30
2804
2714
2702
2704
2707
2706
2829
2810
2817
2718
2716
2819
2818
30
2816
2826
2820
2821
2844
2840
2824
2830
29
2822
2823
2827
2836

FIG. 28

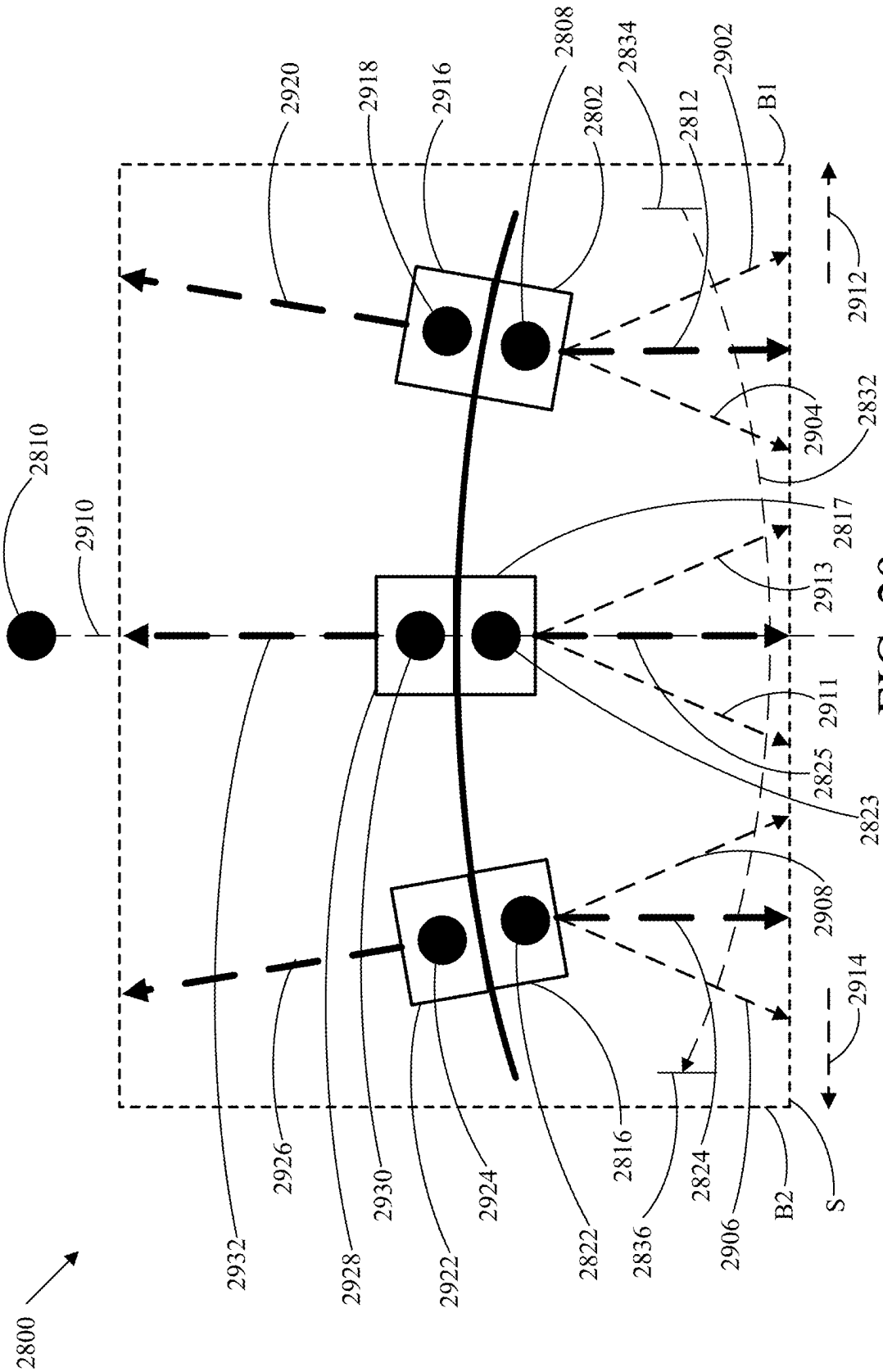
2800
2810
2910
2920
2918
2916
2808
2802
2834
2812
2902
B1
2912
2904
2832
2817
2913
2911
2825
2823
2908
2914
2932
2926
2928
2930
2922
2924
2822
2816
2836
2824
2906
B2
S

FIG. 29

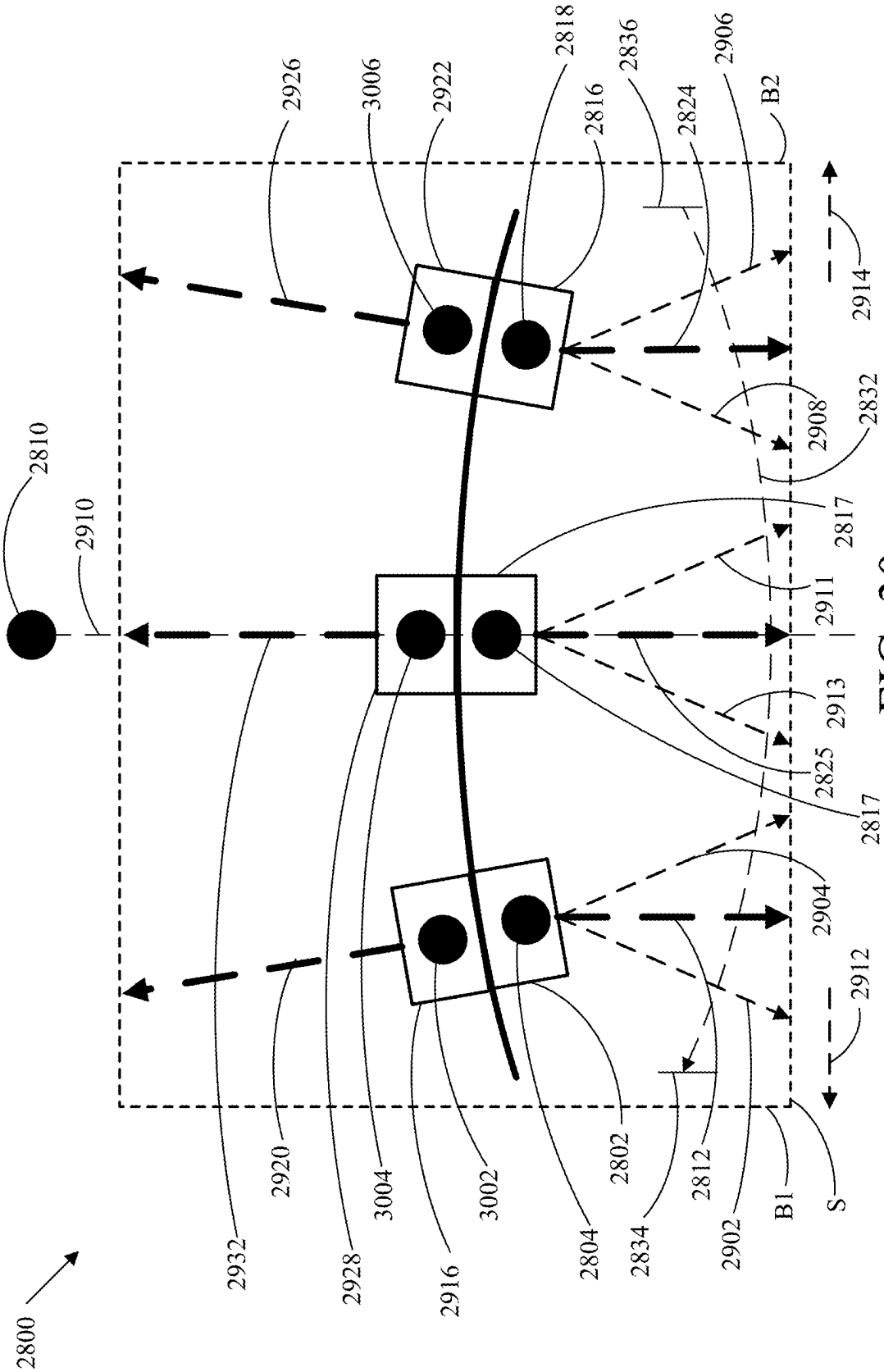
2800
2810
2910
2932
2920
2928
3004
2916
3002
2804
2802
2834
2812
2902
B1
S
2912
2904
2817
2825
2913
2911
2817
2832
2908
2914
B2
2906
2824
2836
2816
2818
2922
3006
2926

FIG. 30

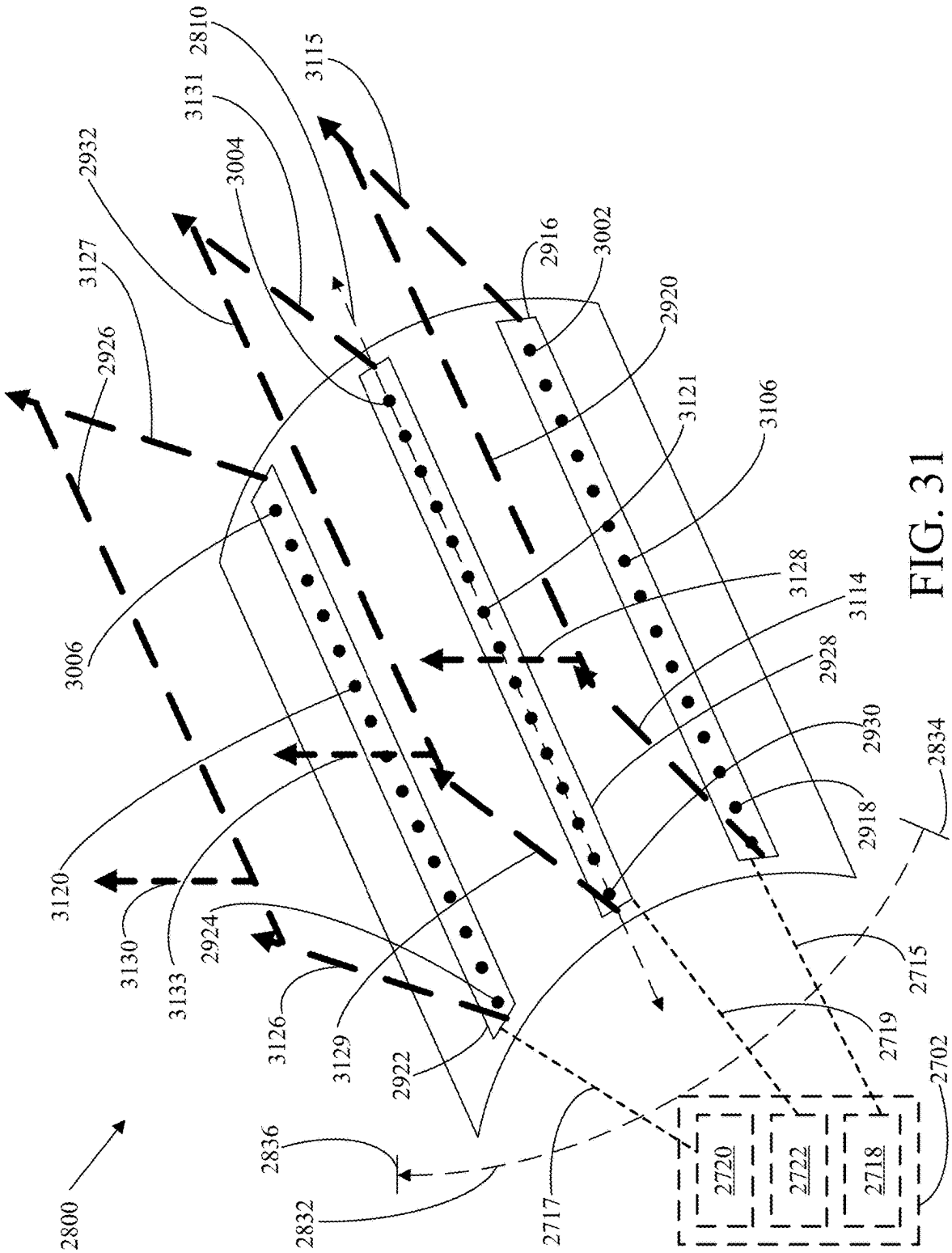
2800
2832
2836
3120
3130
3133
3126
2924
3129
2922
3006
2926
3127
2932
3131
2810
3004
3115
2717
2720
2722
2718
2702
2719
2715
2834
2918
2930
2928
3114
3128
3106
3121
2920
2916
3002

FIG. 31

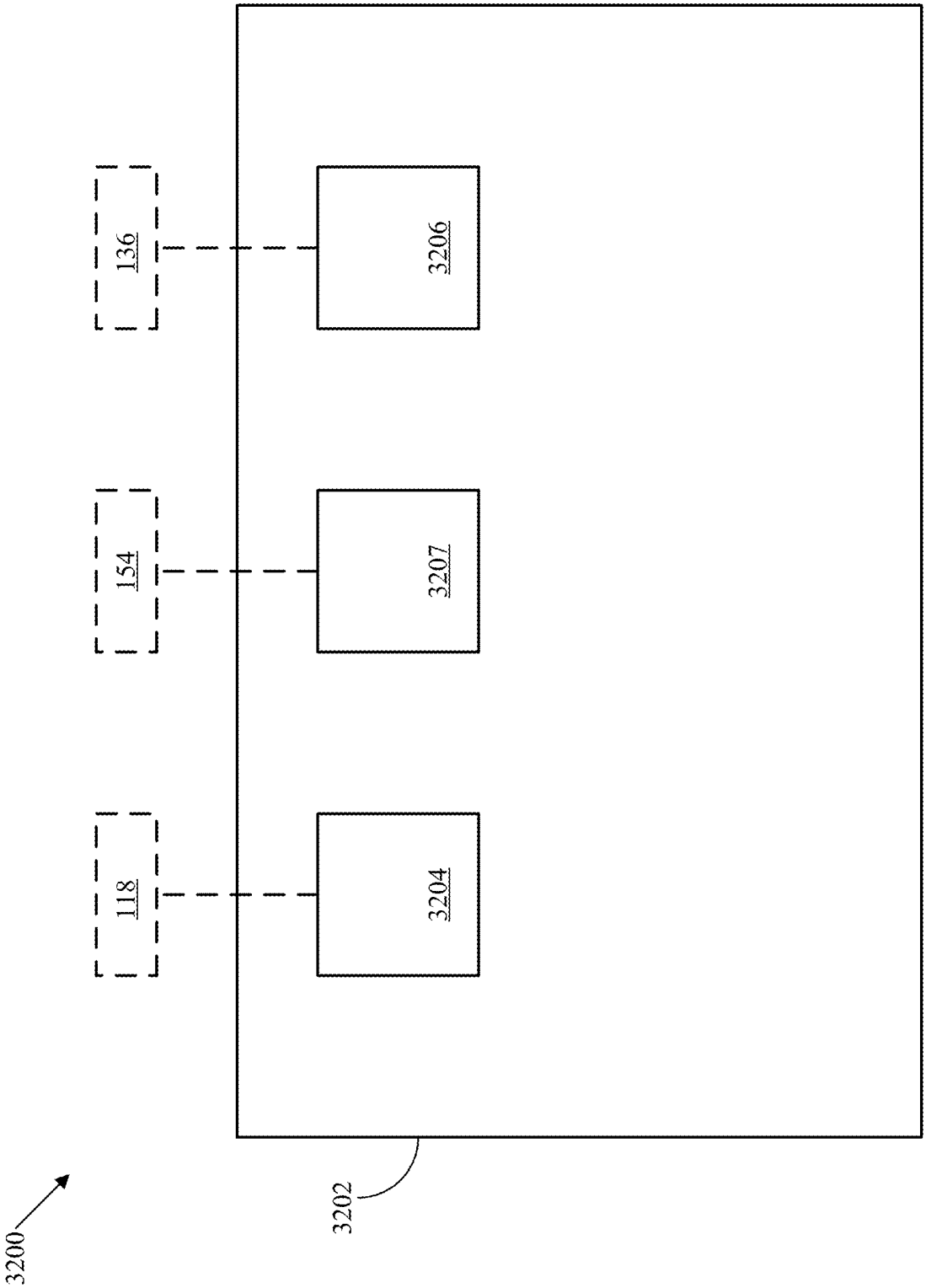

FIG. 32

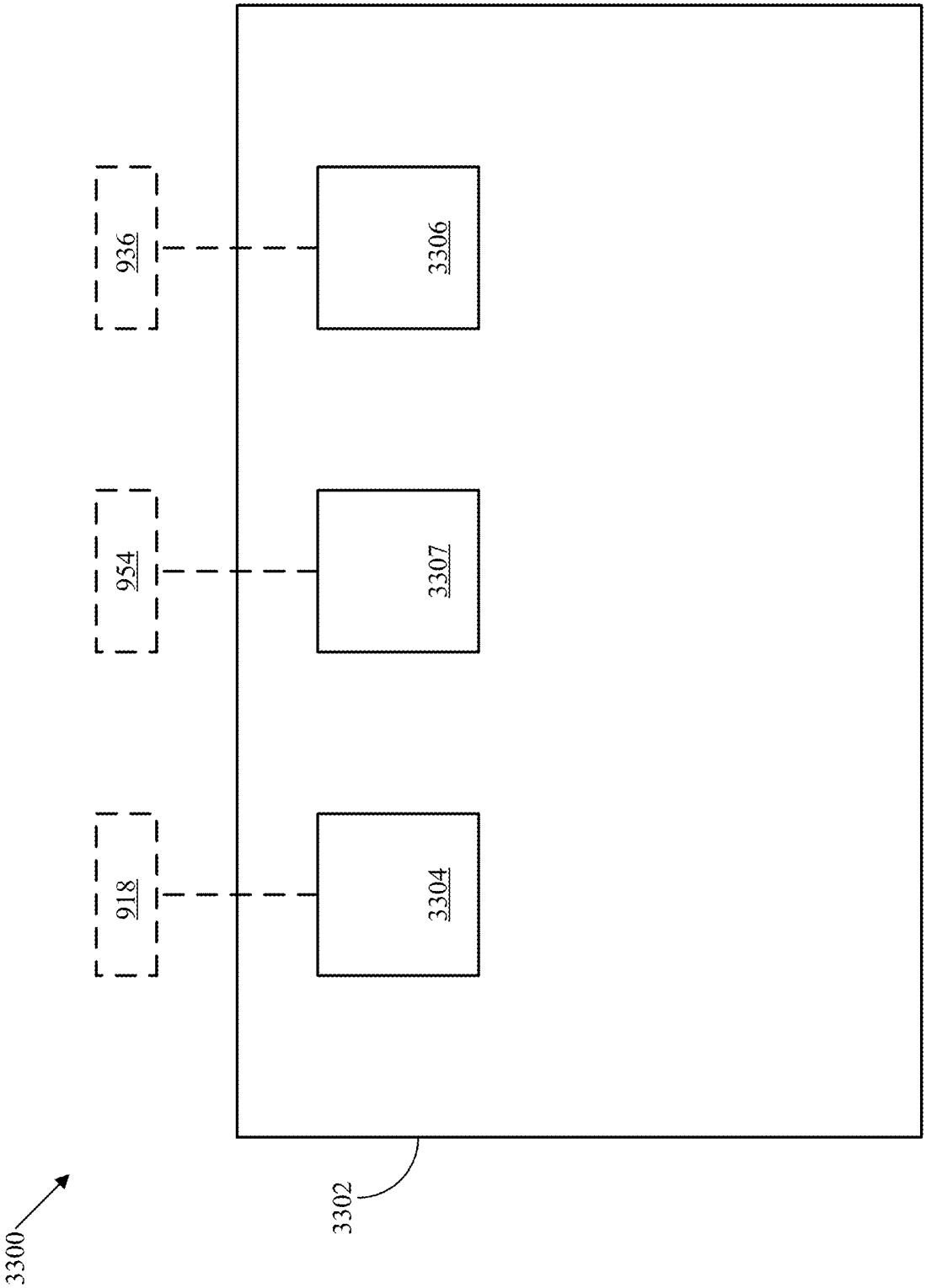

FIG. 33

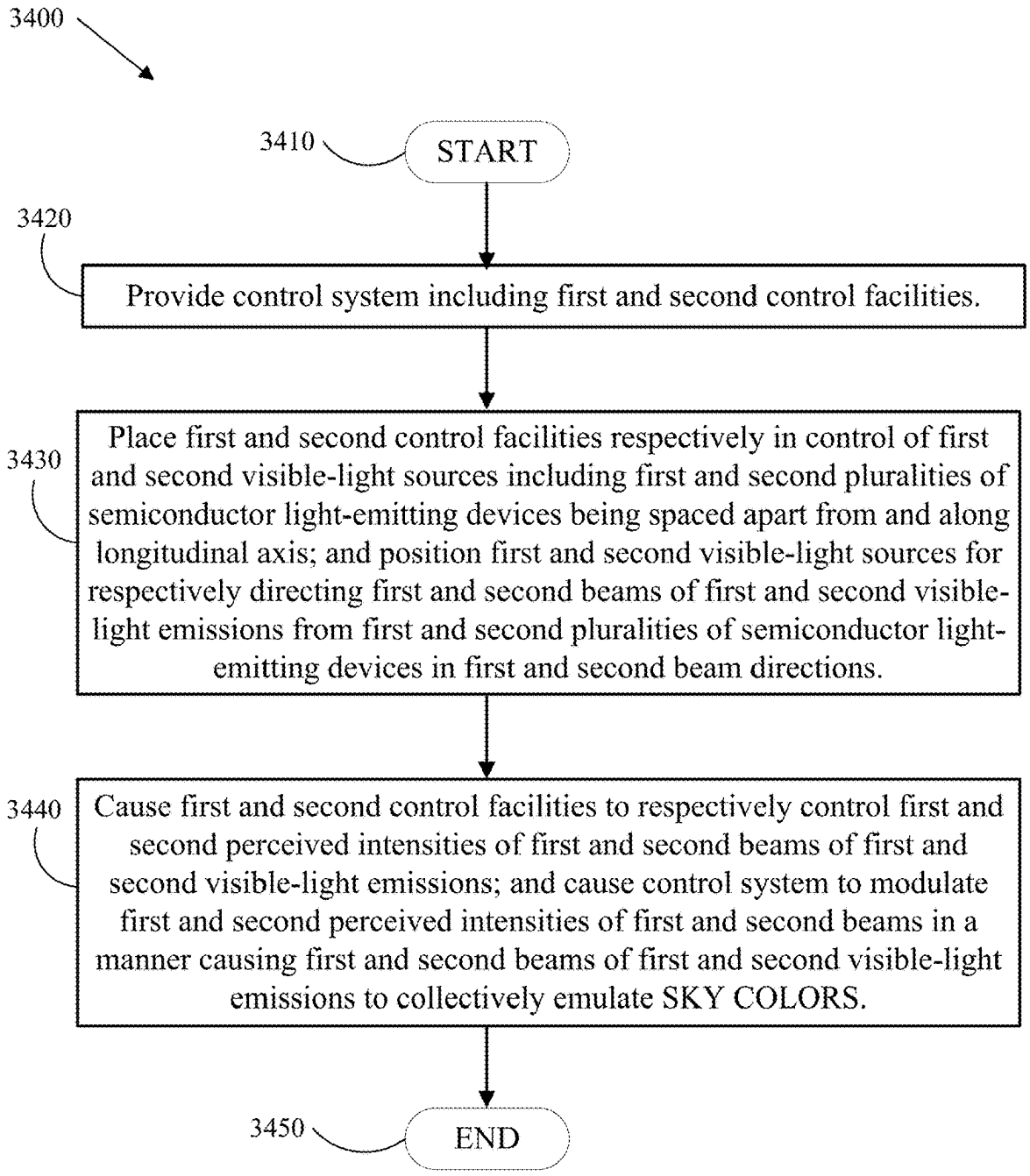
3400
3410
START
3420
Provide control system including first and second control facilities.
3430
Place first and second control facilities respectively in control of first and second visible-light sources including first and second pluralities of semiconductor light-emitting devices being spaced apart from and along longitudinal axis; and position first and second visible-light sources for respectively directing first and second beams of first and second visible-light emissions from first and second pluralities of semiconductor light-emitting devices in first and second beam directions.
3440
Cause first and second control facilities to respectively control first and second perceived intensities of first and second beams of first and second visible-light emissions; and cause control system to modulate first and second perceived intensities of first and second beams in a manner causing first and second beams of first and second visible-light emissions to collectively emulate SKY COLORS.
3450
END

FIG. 34

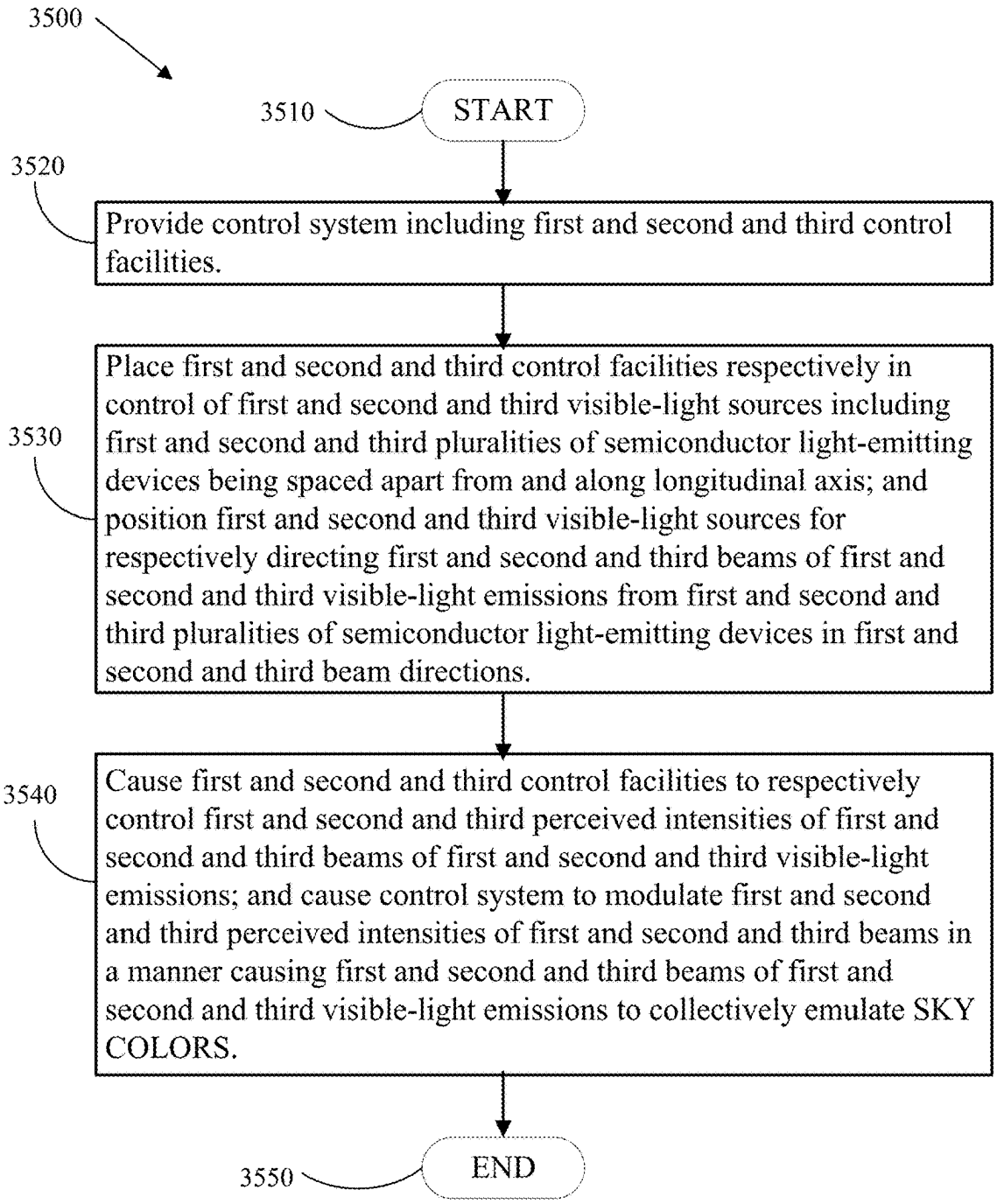
3500
3510
START
3520
Provide control system including first and second and third control facilities.
3530
Place first and second and third control facilities respectively in control of first and second and third visible-light sources including first and second and third pluralities of semiconductor light-emitting devices being spaced apart from and along longitudinal axis; and position first and second and third visible-light sources for respectively directing first and second and third beams of first and second and third visible-light emissions from first and second and third pluralities of semiconductor light-emitting devices in first and second and third beam directions.
3540
Cause first and second and third control facilities to respectively control first and second and third perceived intensities of first and second and third beams of first and second and third visible-light emissions; and cause control system to modulate first and second and third perceived intensities of first and second and third beams in a manner causing first and second and third beams of first and second and third visible-light emissions to collectively emulate SKY COLORS.
3550
END

FIG. 35

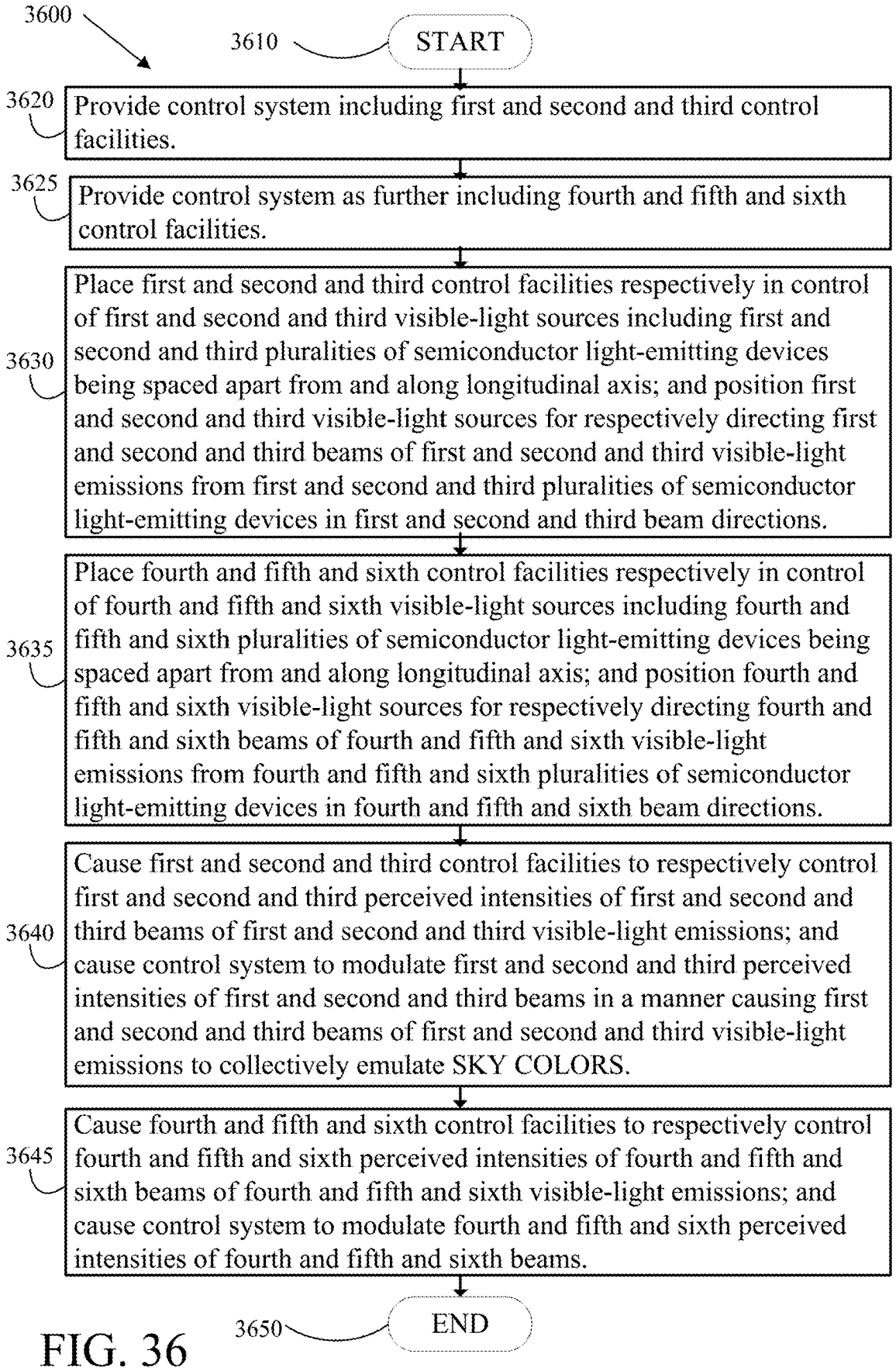
3600
3610
START
3620
Provide control system including first and second and third control facilities.
3625
Provide control system as further including fourth and fifth and sixth control facilities.
3630
Place first and second and third control facilities respectively in control of first and second and third visible-light sources including first and second and third pluralities of semiconductor light-emitting devices being spaced apart from and along longitudinal axis; and position first and second and third visible-light sources for respectively directing first and second and third beams of first and second and third visible-light emissions from first and second and third pluralities of semiconductor light-emitting devices in first and second and third beam directions.
3635
Place fourth and fifth and sixth control facilities respectively in control of fourth and fifth and sixth visible-light sources including fourth and fifth and sixth pluralities of semiconductor light-emitting devices being spaced apart from and along longitudinal axis; and position fourth and fifth and sixth visible-light sources for respectively directing fourth and fifth and sixth beams of fourth and fifth and sixth visible-light emissions from fourth and fifth and sixth pluralities of semiconductor light-emitting devices in fourth and fifth and sixth beam directions.
3640
Cause first and second and third control facilities to respectively control first and second and third perceived intensities of first and second and third beams of first and second and third visible-light emissions; and cause control system to modulate first and second and third perceived intensities of first and second and third beams in a manner causing first and second and third beams of first and second and third visible-light emissions to collectively emulate SKY COLORS.
3645
Cause fourth and fifth and sixth control facilities to respectively control fourth and fifth and sixth perceived intensities of fourth and fifth and sixth beams of fourth and fifth and sixth visible-light emissions; and cause control system to modulate fourth and fifth and sixth perceived intensities of fourth and fifth and sixth beams.
3650
END

FIG. 36

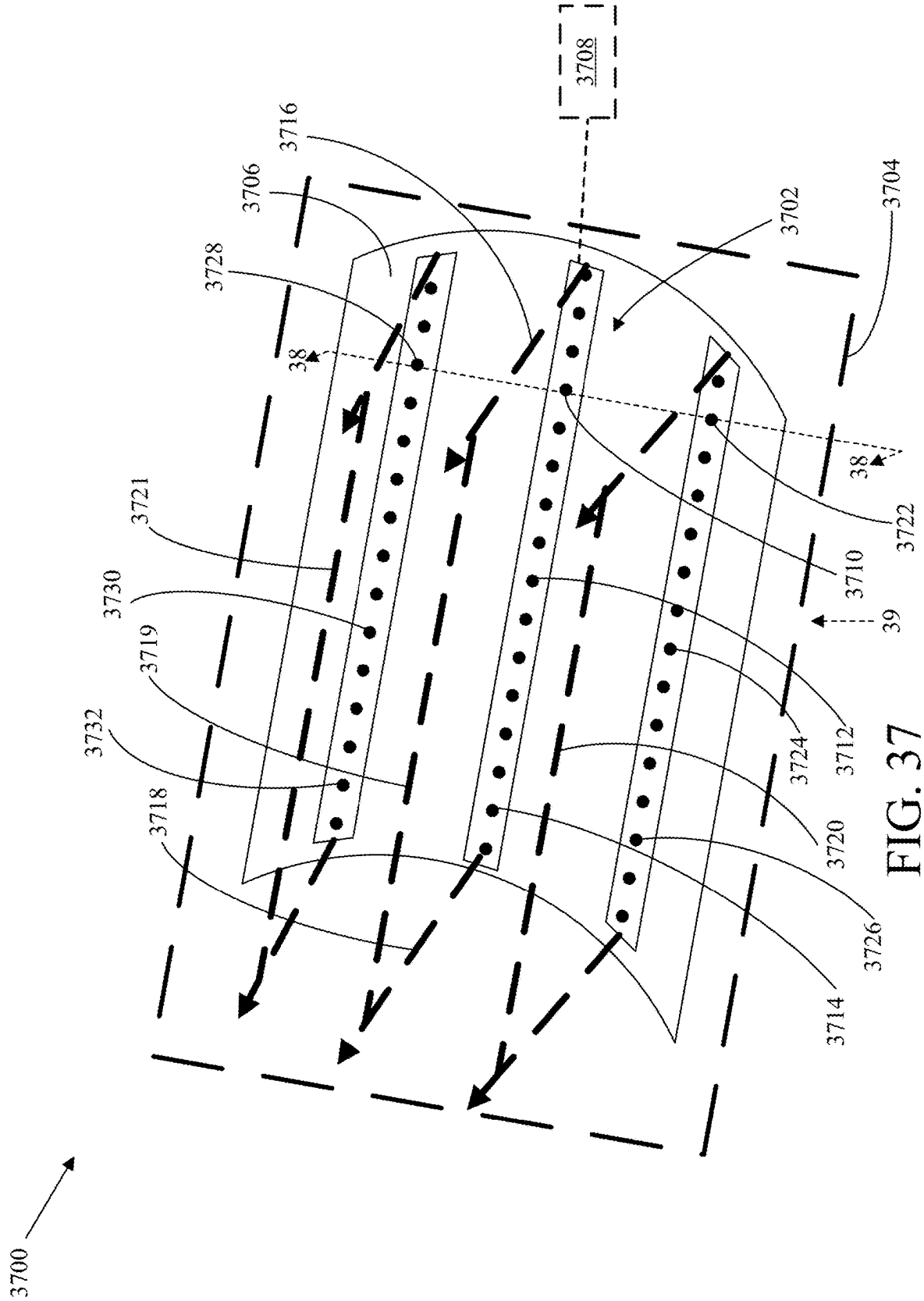
3700
3732
3718
3719
3721
3730
3728
3706
3716
3708
3714
3726
3720
3724
3712
3710
39
38
38
3722
3702
3704

FIG. 37

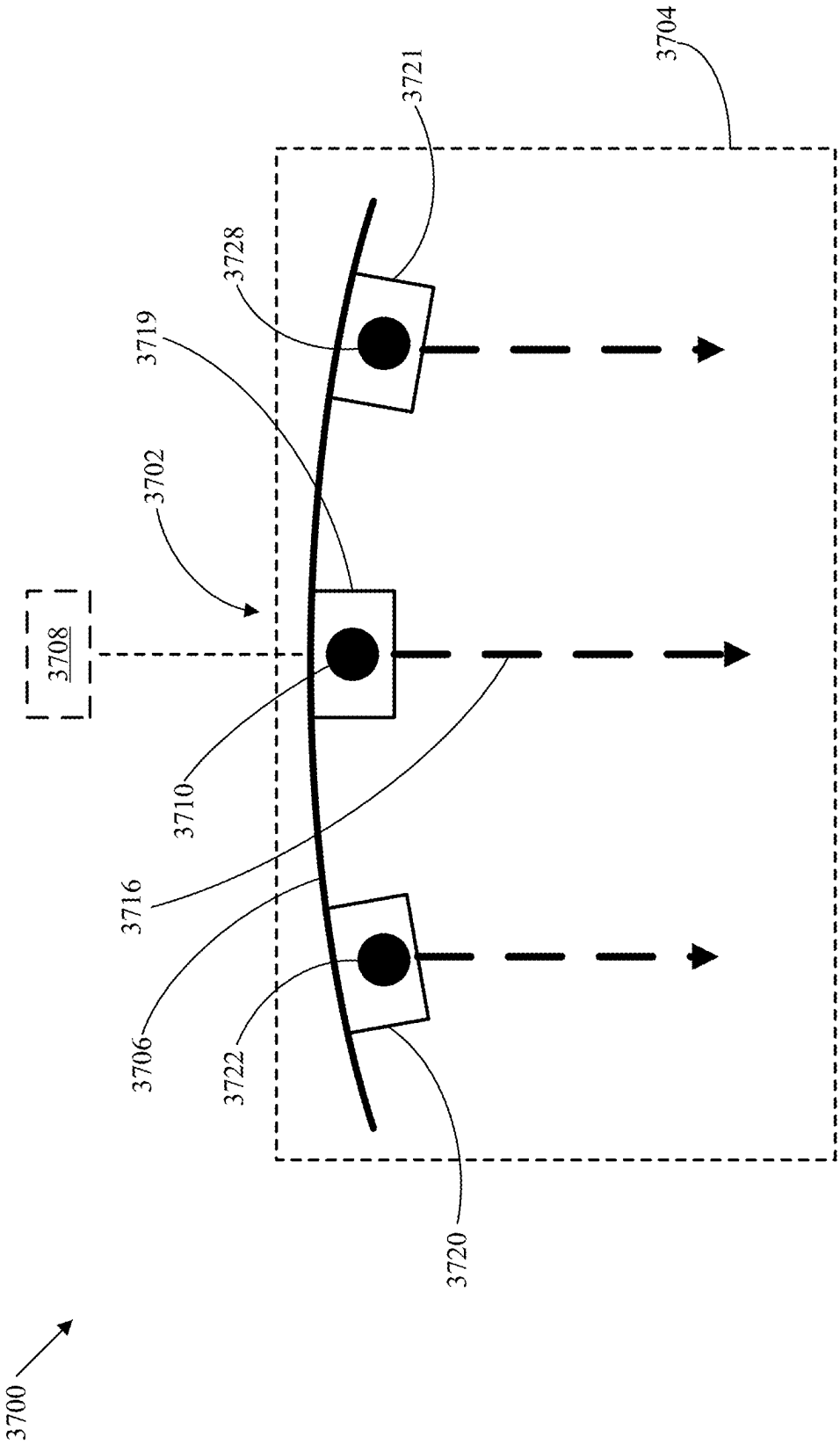

FIG. 38

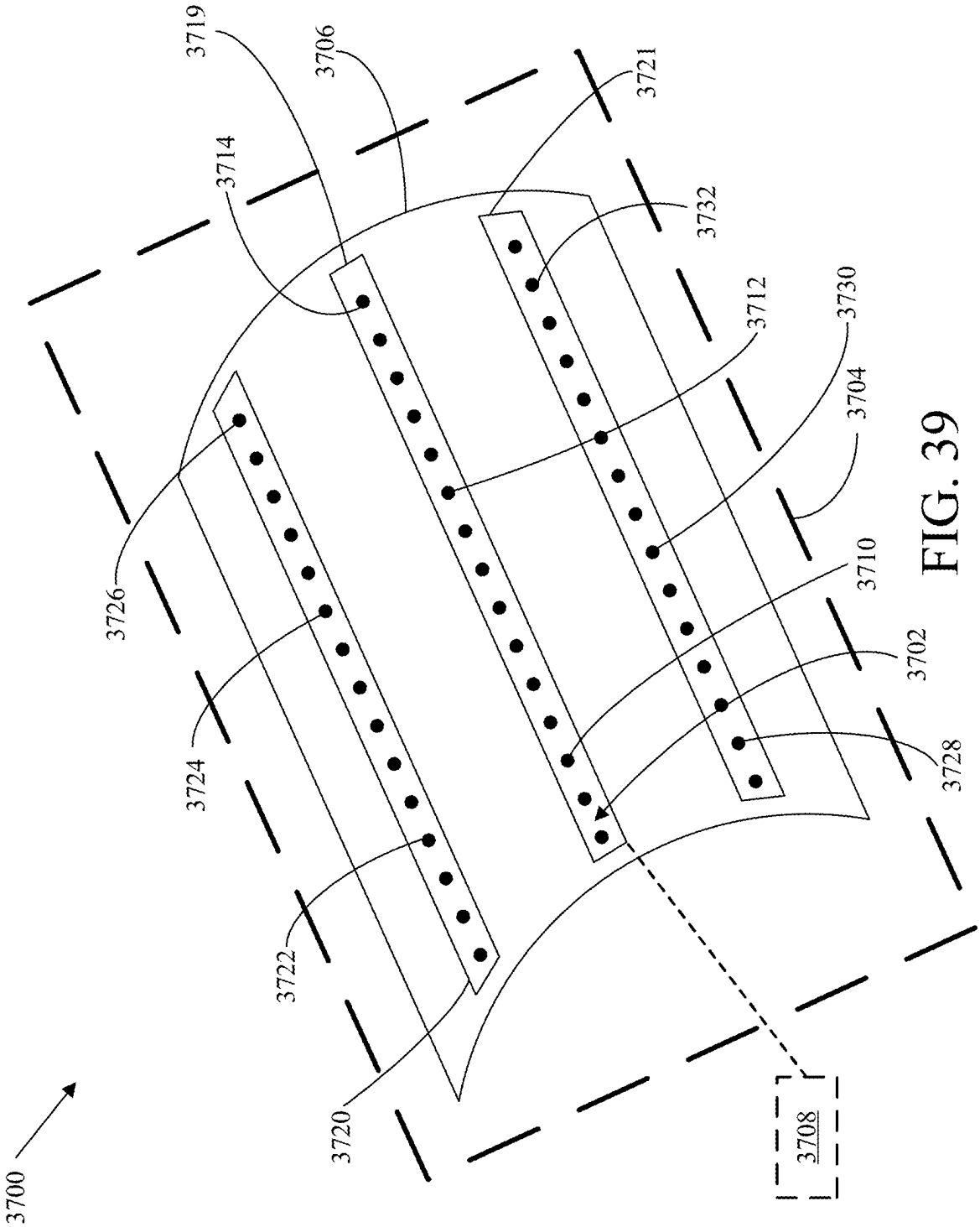
3700
3719
3706
3714
3721
3732
3712
3730
3704
3726
3710
3702
3724
3728
3722
3720
3708

FIG. 39

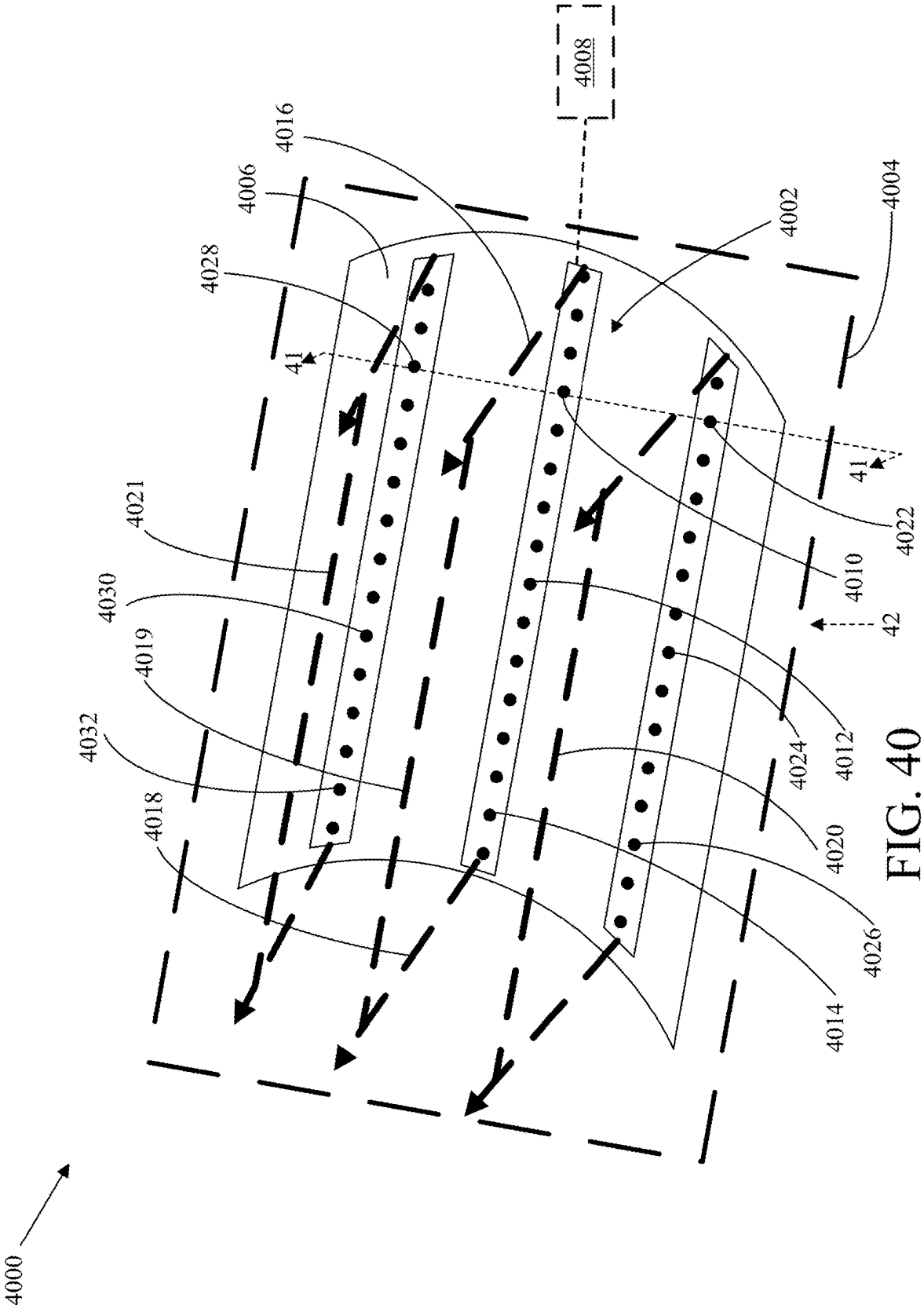
4000
4008
4016
4006
4028
4002
4004
41
41
4021
4022
4030
4010
42
4019
4012
4032
4024
4018
4020
4026
4014

FIG. 40

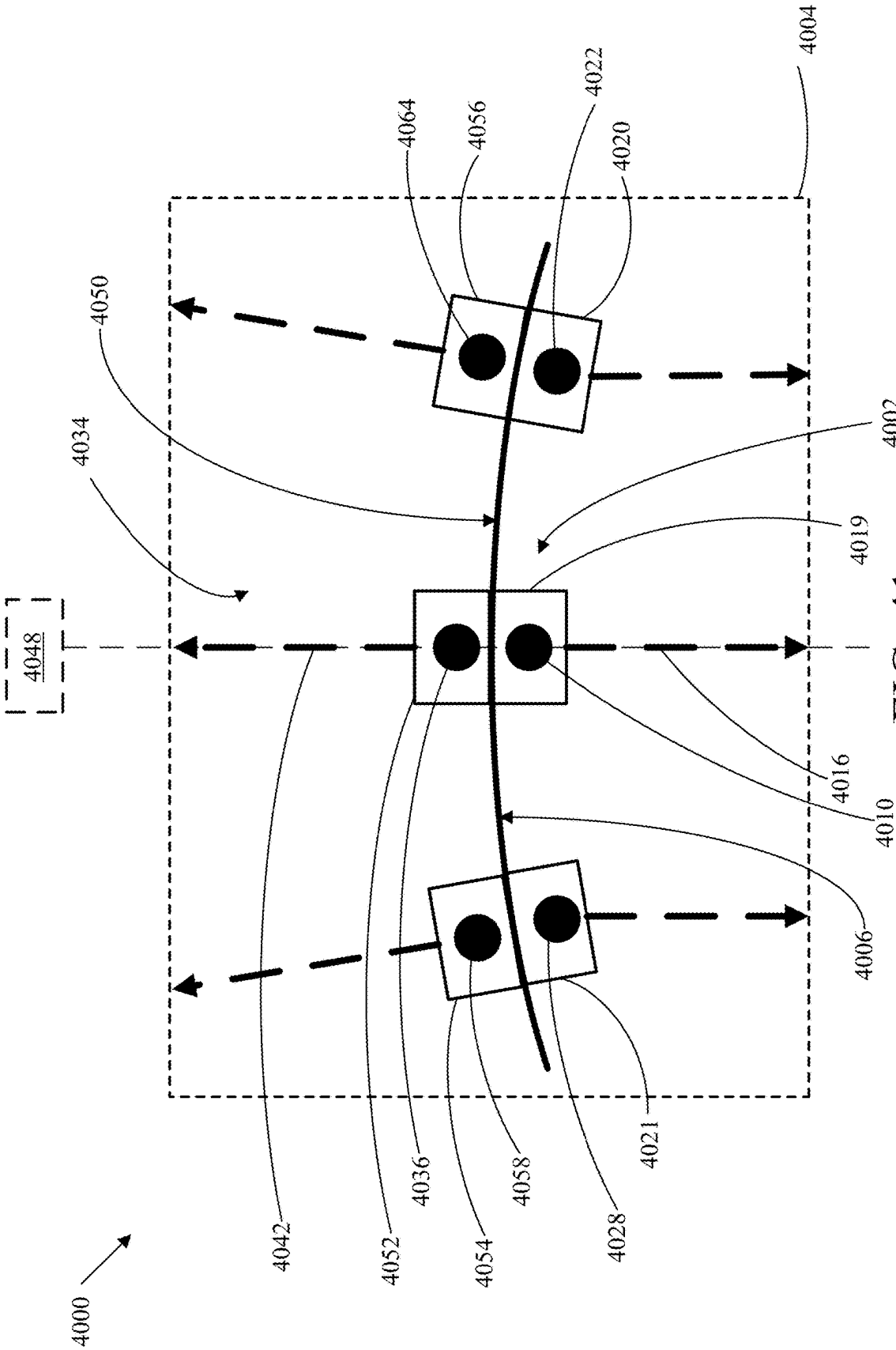
4000
4042
4052
4036
4054
4058
4028
4021
4048
4034
4050
4064
4056
4022
4020
4004
4002
4019
4016
4010
4006

FIG. 41

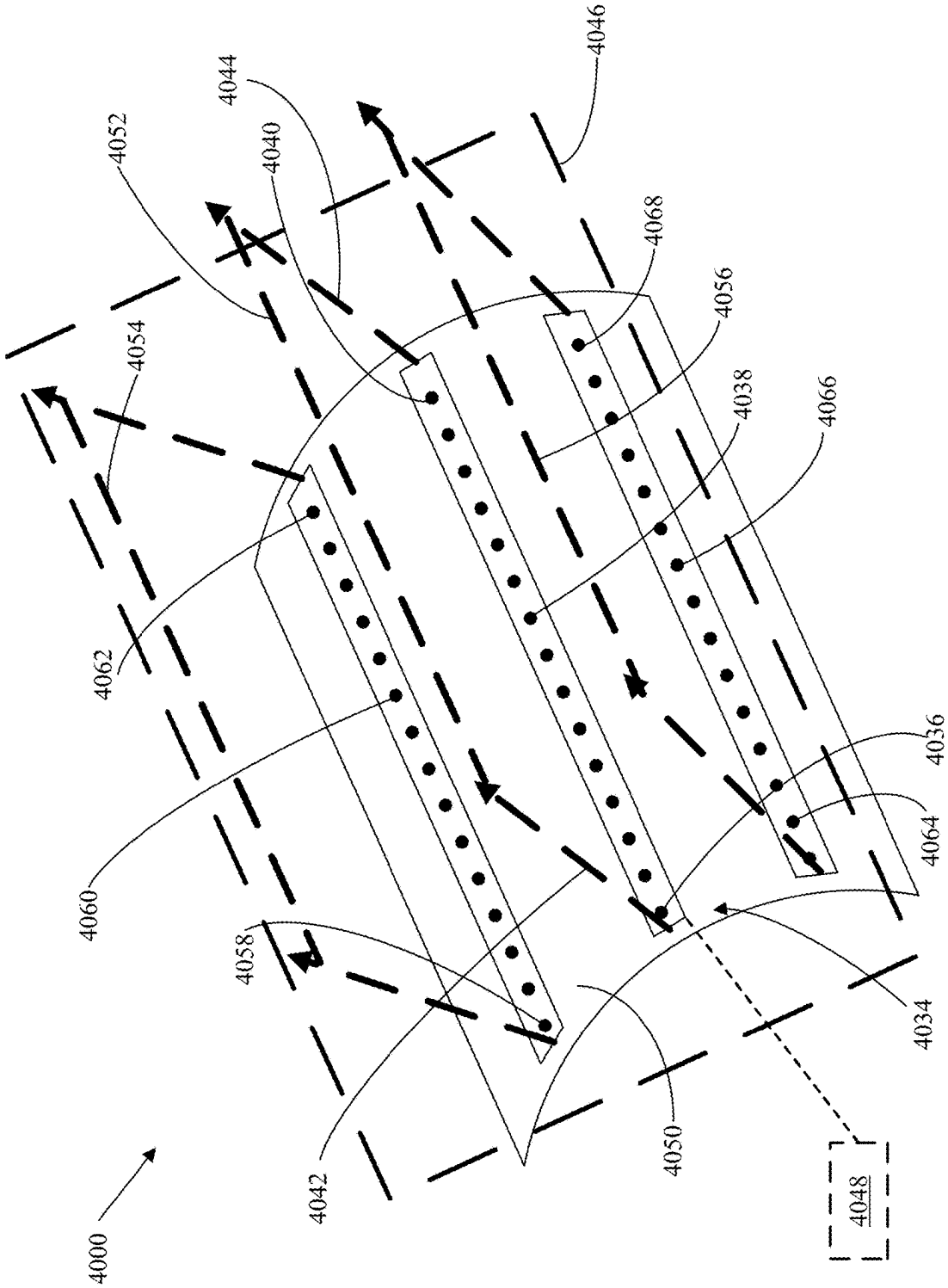
4000
4042
4058
4060
4062
4054
4052
4044
4040
4046
4068
4056
4038
4066
4036
4064
4034
4050
4048

FIG. 42

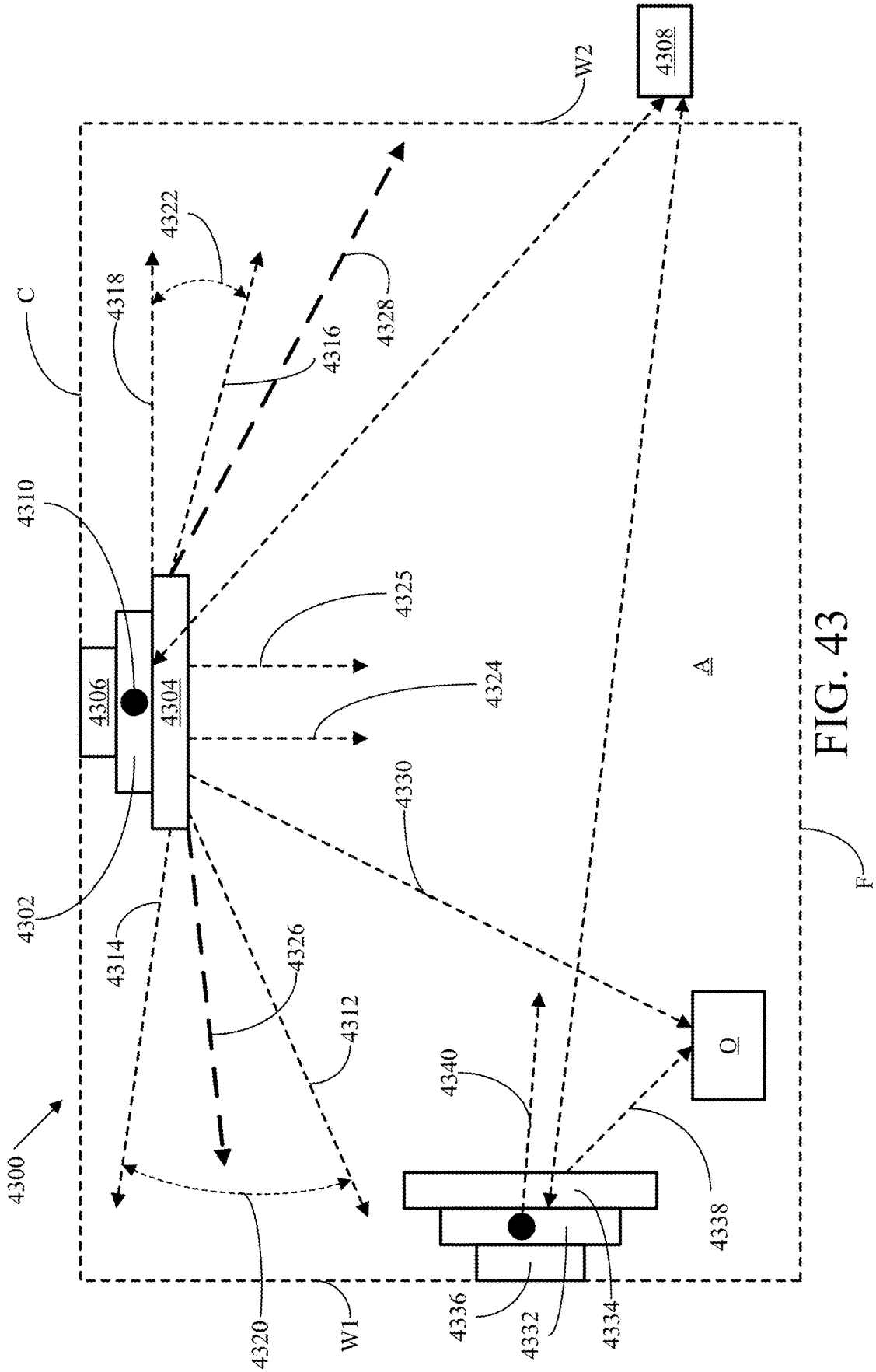
4300
4302
4304
4306
4308
4310
4312
4314
4316
4318
4320
4322
4324
4325
4326
4328
4330
4332
4334
4336
4338
4340
W1
W2
C
F
A
O

FIG. 43

BEAM-SHAPING LIGHTING SYSTEMS

CROSS-REFERENCE TO RELATED APPLICATIONS

This application is a continuation-in-part of commonly-owned U.S. utility patent application Ser. No. 18/191,719 filed on Mar. 28, 2023, which is a continuation of commonly-owned U.S. utility patent application Ser. No. 17/100,666 filed on Nov. 20, 2020 which issued as U.S. utility U.S. Pat. No. 11,635,188, which is a continuation-in-part of commonly-owned U.S. utility patent application Ser. No. 16/393,518 filed on Apr. 24, 2019 which issued as U.S. utility U.S. Pat. No. 11,588,515, which is a continuation-in-part of commonly-owned U.S. utility patent application Ser. No. 16/279,396 filed on Feb. 19, 2019, which is a continuation of commonly-owned U.S. utility patent application Ser. No. 15/937,843 filed on Mar. 27, 2018 which issued as U.S. utility U.S. Pat. No. 10,253,948, the entireties of the four foregoing patent applications being hereby incorporated herein by reference. This application claims the benefit of commonly-owned U.S. provisional patent application Ser. No. 62/477,408 filed on Mar. 27, 2017, the entirety of which hereby is incorporated herein by reference. This application further claims the benefit of commonly-owned U.S. provisional patent application Ser. No. 62/757,664 filed on Nov. 8, 2018, the entirety of which hereby is incorporated herein by reference. This application also is a continuation-in-part of commonly-owned U.S. patent application Ser. No. 16/049,452 filed on Jul. 30, 2018 which issued as U.S. utility U.S. Pat. No. 10,701,775, the entirety of which hereby is incorporated herein by reference. This application additionally is a continuation-in-part of commonly-owned Patent Cooperation Treaty (PCT) international patent application serial number PCT/US2016/015435 filed on Jan. 28, 2016, the entirety of which hereby is incorporated herein by reference. This application further is a continuation-in-part of commonly-owned PCT international patent application serial number PCT/US2018/029380 filed on Apr. 25, 2018, the entirety of which hereby is incorporated herein by reference. This application claims the benefit of commonly-owned U.S. provisional patent application Ser. No. 62/491,137 filed on Apr. 27, 2017, the entirety of which hereby is incorporated herein by reference. This application also claims the benefit of commonly-owned U.S. provisional patent application Ser. No. 62/562,714 filed on Sep. 25, 2017, the entirety of which hereby is incorporated herein by reference. This application further claims the benefit of commonly-owned U.S. provisional patent application Ser. No. 62/665,980 filed on May 2, 2018, the entirety of which hereby is incorporated herein by reference. The entirety of each one of the foregoing commonly-owned patent applications hereby is incorporated herein by reference.

BACKGROUND OF THE INVENTION

1. Field of the Invention

The present invention relates to the field of lighting systems for generating visible-light emissions.

2. Background of the Invention

Numerous lighting systems for generating visible-light emissions have been developed. As examples, some of these lighting systems may control the visible-light emissions for purposes of improving circadian rhythms. Despite the existence of such lighting systems, further improvements are still needed in lighting systems for generating such controlled visible-light emissions.

SUMMARY

In an example of an implementation, a lighting system is provided that includes a visible-light source, an optical system, a mounting system, and a control system. In the example of the implementation, the visible-light source includes a plurality of semiconductor light-emitting devices. The visible-light source further is arranged for generating a plurality of visible-light emissions having a range of selectable color points including a cool to very cool white color point for daytime and a warm to very warm white color point for nighttime. In the example of the implementation, the optical system is integrated with the visible-light source. Further in the example of the implementation, the optical system is arranged for causing some of the visible-light emissions to have a range of selectable beam widths including a relatively wide beam width and a relatively narrow beam width. In the example of the implementation, the mounting system is integrated with the visible-light source and with the optical system. The mounting system in the example of the implementation is arranged for causing some of the visible-light emissions to have a range of selectable beam directions. In the example of the implementation, the control system is integrated with the visible-light source and with the optical system and with, the mounting system. Further in the example of the implementation, the control system is for selectably causing the visible-light emissions to include a daytime configuration having the cool to very cool white color point and the relatively wide beam width, and to include a nighttime configuration having the warm to very warm white color point and the relatively narrow beam width. Additionally in the example of the implementation, the daytime configuration includes the control system as being for causing the visible-light emissions to include lateral-light emissions or up-light emissions, the daytime configuration promoting a relatively high equivalent melanopic lux. Further in the example of the implementation, the nighttime configuration includes the control system as being for causing the visible-light emissions to include down-light emissions, the nighttime configuration promoting a relatively low equivalent melanopic lux.

In some examples of the lighting system, the control system may be arranged for causing the visible-light source to selectably generate some of the visible-light emissions having the cool to very cool white color point as having a relatively high level of light output intensity, and to selectably generate some of the visible-light emissions having the warm to very warm white color point as having a relatively low level of light output intensity.

In further examples of the lighting system, the control system may be for dimming some of the visible-light emissions from having the cool to very cool white color point and the relatively high level of light output intensity, to having the warm to very warm white color point and the relatively low level of light output intensity.

In additional examples of the lighting system, the daytime configuration may include the control system as causing the visible-light emissions to have sufficient circadian-effective light (Circadian Illuminance; CLA) and to have a spectral irradiance distribution of visible-light emissions incident at the cornea of a user being weighted to reflect the spectral sensitivity of the human circadian system as measured by acute melatonin suppression after a one-hour exposure, and

to have a CS value being the effectiveness of the spectrally weighted irradiance at the cornea, of at least about 0.3.

In further examples of the lighting system, the control system may be for dimming some of the visible-light emissions while causing the beam width to become relatively narrower and causing a beam angle direction of the visible-light emissions to change from a wall wash beam direction to a wall graze beam direction.

In additional examples of the lighting system, the control system may be for cycling some of the visible-light emissions between the daytime configuration having the cool to very cool white color point and the relatively wide beam width and a wall wash beam direction, and the nighttime configuration having the warm to very warm white color point and the relatively narrow beam width and a wall graze beam direction.

In other examples of the lighting system, the optical system, being for causing some of the visible-light emissions to have the relatively wide beam width, may include causing an increase of a vertical illuminance of some of the visible-light emissions in a wall wash beam direction.

In some examples of the lighting system, the mounting system may be for positioning the visible-light source as facing toward a down-light direction for causing some of the visible-light emissions to be directed in a wall wash beam direction or a wall graze beam direction.

In further examples of the lighting system, the visible-light source may be for positioning some of the plurality of the semiconductor light-emitting devices for generating directional visible-light emissions in a wall wash beam direction or a wall graze beam direction.

In additional examples of the lighting system, the relatively narrow beam angle may be within a range of between about five (5) degrees to about forty-five (45) degrees; and the relatively wide beam angle may be within a range of between about forty-six (46) degrees and about one hundred and twenty (120) degrees.

In other examples of the lighting system, the range of selectable beam directions may include a wall wash beam direction or a wall graze beam direction.

In some examples of the lighting system, the daytime configuration may include the control system as causing the visible-light emissions to include lateral-light emissions being laterally directed toward a wall or being directed toward an object located in an ambient space, or to include up-light emissions being upwardly directed toward a ceiling of the ambient space.

In further examples of the lighting system, the mounting system may be for causing some of the visible-light emissions to be laterally directed toward the wall or toward the object or to be upwardly directed toward the ceiling.

In other examples of the lighting system, the mounting system may be structured for mounting the lighting system on a ceiling for directing some of the visible-light emissions in a lateral direction.

In some examples of the lighting system, the mounting system may be structured for mounting the lighting system on a wall for directing some of the visible-light emissions in a lateral or upward direction.

In further examples of the lighting system, the nighttime configuration may include the control system as causing the visible-light emissions to include down-light emissions downwardly directed toward an object or a floor.

In additional examples of the lighting system, the mounting system may be for causing some of the visible-light emissions to be downwardly directed toward the object or the floor.

In other examples of the lighting system, the mounting system may be structured for mounting the lighting system on a ceiling for directing some of the visible-light emissions in a downward direction.

In some examples of the lighting system, the mounting system may be structured for mounting the lighting system on a wall for directing some of the visible-light emissions in a downward direction.

In further examples of the lighting system, the control system may be for causing some of the visible-light emissions to have the warm white color point with a correlated color temperature (CCT) as being within a range of between about 1800K and about 3100K.

In additional examples of the lighting system, the control system may be for causing some of the visible-light emissions to have the cool white color point with a correlated color temperature (CCT) as being within a range of between about 3101K and about 10000K.

In other examples of the lighting system, the control system may be arranged for selectably causing the visible-light source to generate some of the visible-light emissions with the warm to very warm white color point as not having a cyan-ish dominant wavelength being within a range of between about 480 nanometers and about 540 nanometers.

In some examples of the lighting system, the control system may be arranged for causing the visible-light source to generate some of the visible-light emissions with the cool to very cool white color point as having a cyan-ish dominant wavelength being within a range of between about 480 nanometers and about 540 nanometers.

In further examples of the lighting system, the control system may be arranged for causing the visible-light emissions in the nighttime configuration to have less than about 80 microWatts per lumen of power in a wavelength range of between about 440 nanometers and about 495 nanometers.

In additional examples of the lighting system, the control system may be arranged for causing the visible-light emissions in the daytime configuration to have more than about 800 microWatts per lumen of power in a wavelength range of between about 440 nanometers and about 495 nanometers.

In other examples of the lighting system, the daytime configuration may include the control system as causing the visible-light emissions to include lateral-light emissions or up-light emissions, the daytime configuration promoting the relatively high equivalent melanopic lux as being within a range of between about 200/1000 and about 525/1000.

In some examples of the lighting system, the nighttime configuration may include the control system as causing the visible-light emissions to include down-light emissions, the nighttime configuration promoting the relatively low equivalent melanopic lux as being within a range of between about 199/1000 and about 45/1000.

In further examples of the lighting system, the plurality of the semiconductor light-emitting devices may include three semiconductor light-emitting devices being mutually spaced apart by the visible-light source in a linear array.

In other examples of the lighting system, the plurality of the semiconductor light-emitting devices may include three elongated strings each including a plurality of the semiconductor light-emitting devices, the three elongated strings being mutually spaced apart by the visible-light source as each respectively including one of three linear arrays, and the control system may be for separately providing input power for driving each one of the three elongated strings of the semiconductor light-emitting devices.

Other systems, processes, features and advantages of the invention will be or will become apparent to one with skill in the art upon examination of the following figures and detailed description. It is intended that all such additional systems, processes, features and advantages be included within this description, be within the scope of the invention, and be protected by the accompanying claims.

BRIEF DESCRIPTION OF THE FIGURES

The invention can be better understood with reference to the following figures. The components in the figures are not necessarily to scale, emphasis instead being placed upon illustrating the principles of the invention. Moreover, in the figures, like reference numerals designate corresponding parts throughout the different views.

FIG. **1** is a schematic top perspective view showing an example [**100**] of an implementation of a lighting system.

FIG. **2** is a schematic cross-sectional view taken along the line **2-2** showing the example [**100**] of the lighting system.

FIG. **3** is a schematic cross-sectional view taken along the line **3-3** showing the example [**100**] of the lighting system.

FIG. **4** is a schematic bottom perspective view taken along the line **4** showing the example [**100**] of an implementation of a lighting system.

FIG. **5** is a schematic top perspective view showing an example [**500**] of an implementation of a lighting system.

FIG. **6** is a schematic cross-sectional view taken along the line **6-6** showing the example [**500**] of the lighting system.

FIG. **7** is a schematic cross-sectional view taken along the line **7-7** showing the example [**500**] of the lighting system.

FIG. **8** is a schematic bottom perspective view taken along the line **8** showing the example [**500**] of an implementation of a lighting system.

FIG. **9** is a schematic top perspective view showing an example [**900**] of an implementation of a lighting system.

FIG. **10** is a schematic cross-sectional view taken along the line **10-10** showing the example [**900**] of the lighting system.

FIG. **11** is a schematic cross-sectional view taken along the line **11-11** showing the example [**900**] of the lighting system.

FIG. **12** is a schematic bottom perspective view taken along the line **12** showing the example [**900**] of an implementation of a lighting system.

FIG. **13** is a schematic top perspective view showing an example [**1300**] of an implementation of a lighting system.

FIG. **14** is a schematic cross-sectional view taken along the line **14-14** showing the example [**1300**] of the lighting system.

FIG. **15** is a schematic cross-sectional view taken along the line **15-15** showing the example [**1300**] of the lighting system.

FIG. **16** is a schematic bottom perspective view taken along the line **16** showing the example [**1300**] of an implementation of a lighting system.

FIG. **17** is a schematic diagram of an example [**1700**] of a lighting controller.

FIG. **18** is a schematic bottom perspective view showing an example [**1800**] of a lighting system together with which the example [**1700**] of the lighting controller may be utilized.

FIG. **19** is a schematic cross-sectional view taken along the line **19-19** showing the example [**1800**] of the lighting system together with which the example [**1700**] of the lighting controller may be utilized.

FIG. **20** is a schematic cross-sectional view taken along the line **20-20** showing the example [**1800**] of the lighting system together with which the example [**1700**] of the lighting controller may be utilized.

FIG. **21** is a schematic top perspective view taken along the line **21** showing the example [**1800**] of an implementation of a lighting system together with which the example [**1700**] of the lighting controller may be utilized.

FIG. **22** is a schematic diagram of an example [**2200**] of a lighting controller.

FIG. **23** is a schematic bottom perspective view showing an example [**2300**] of an implementation of a lighting system together with which the example [**2200**] of the lighting controller may be utilized.

FIG. **24** is a schematic cross-sectional view taken along the line **24-24** showing the example [**2300**] of the lighting system together with which the example [**2200**] of the lighting controller may be utilized.

FIG. **25** is a schematic cross-sectional view taken along the line **25-25** showing the example [**2300**] of the lighting system together with which the example [**2200**] of the lighting controller may be utilized.

FIG. **26** is a schematic top perspective view taken along the line **26** showing the example [**2300**] of an implementation of a lighting system together with which the example [**2200**] of the lighting controller may be utilized.

FIG. **27** is a schematic diagram of an example [**2700**] of a lighting controller.

FIG. **28** is a schematic bottom perspective view showing an example [**2800**] of an implementation of a lighting system together with which the example [**2700**] of the lighting controller may be utilized.

FIG. **29** is a schematic cross-sectional view taken along the line **29-29** showing the example [**2800**] of the lighting system together with which the example [**2700**] of the lighting controller may be utilized.

FIG. **30** is a schematic cross-sectional view taken along the line **30-30** showing the example [**2800**] of the lighting system together with which the example [**2700**] of the lighting controller may be utilized.

FIG. **31** is a schematic top perspective view taken along the line **31** showing the example [**2800**] of an implementation of a lighting system together with which the example [**2700**] of the lighting controller may be utilized.

FIG. **32** is a schematic diagram of an example [**3200**] of a lighting controller, being utilized together with the lighting system [**100**] discussed earlier in connection with FIGS. **1-4**.

FIG. **33** is a schematic diagram of an example [**3300**] of a lighting controller, being utilized together with the lighting system [**900**] discussed earlier in connection with FIGS. **9-12**.

FIG. **34** is a flow chart of an example [**3400**] of a lighting control method that may be carried out, as an example, utilizing the lighting controller [**1700**] discussed earlier in connection with FIGS. **17-21**.

FIG. **35** is a flow chart of an example [**3500**] of a lighting control method that may be carried out, as an example, utilizing the lighting controller [**2200**] discussed earlier in connection with FIGS. **22-26**.

FIG. **36** is a flow chart of an example [**3600**] of a lighting control method that may be carried out, as an example, utilizing the lighting controller [**2700**] discussed earlier in connection with FIGS. **27-31**.

FIG. **37** is a schematic bottom perspective view showing an example [**3700**] of an implementation of a lighting system.

FIG. **38** is a schematic cross-sectional view taken along the line **38-38** showing the example [**3700**] of the lighting system.

FIG. **39** is a schematic top perspective view taken along the line **39** showing the example [**3700**] of an implementation of a lighting system.

FIG. **40** is a schematic bottom perspective view showing an example [**4000**] of an implementation of a lighting system.

FIG. **41** is a schematic cross-sectional view taken along the line **41-41** showing the example [**4000**] of the lighting system.

FIG. **42** is a schematic top perspective view taken along the line **42** showing the example [**4000**] of an implementation of a lighting system.

FIG. **43** is a schematic side view showing an example [**4300**] of an implementation of a lighting system.

DETAILED DESCRIPTION

Various lighting systems for generating visible-light emissions from semiconductor light-emitting devices have been designed. Many such lighting systems exist that control visible-light emissions for purposes of improving circadian rhythms. However, existing lighting systems often have demonstrably failed to effectively control the visible-light with regards to combinations of several factors for potentially improving circadian rhythms that may include color points, melanopic lux, beam widths, beam directions, light intensities, circadian luminance, and CS (which is the effectiveness of spectrally weighted irradiance).

Lighting systems accordingly are provided herein that include a visible-light source, an optical system, a mounting system, and a control system. In examples of the lighting systems, the visible-light source includes a plurality of semiconductor light-emitting devices. The visible-light source in the examples of the lighting systems further is arranged for generating a plurality of visible-light emissions having a range of selectable color points including a cool to very cool white color point for daytime and a warm to very warm white color point for nighttime. In the examples of the lighting systems, the optical system is integrated with the visible-light source. Further in the examples of the lighting systems, the optical system is arranged for causing some of the visible-light emissions to have a range of selectable beam widths including a relatively wide beam width and a relatively narrow beam width. In the examples of the lighting systems, the mounting system is integrated with the visible-light source and with the optical system. The mounting system in the examples of the lighting systems is arranged for causing some of the visible-light emissions to have a range of selectable beam directions. In the examples of the lighting systems, the control system is integrated with the visible-light source and with the optical system and with, the mounting system. Further in the examples of the lighting systems, the control system is for selectably causing the visible-light emissions to include a daytime configuration having the cool to very cool white color point and the relatively wide beam width, and to include a nighttime configuration having the warm to very warm white color point and the relatively narrow beam width. Additionally in the examples of the lighting systems, the daytime configuration includes the control system as being for causing the visible-light emissions to include lateral-light emissions or up-light emissions, the daytime configuration promoting a relatively high equivalent melanopic lux. Further in the examples of the lighting systems, the nighttime configuration includes the control system as being for causing the visible-light emissions to include down-light emissions, the nighttime configuration promoting a relatively low equivalent melanopic lux.

The following definitions of terms, being stated as applying "throughout this specification", are hereby deemed to be incorporated throughout this specification, including but not limited to the Summary, Brief Description of the Figures, Detailed Description, and Claims.

Throughout this specification, the term "daytime" means the time period between a local sunrise where the lighting system is located, and the local sunset where the lighting system is located. Throughout this specification, the term "nighttime" means the time period between a local sunset where the lighting system is located, and the local sunrise where the lighting system is located.

Throughout this specification, the term "semiconductor" means: a substance, examples including a solid chemical element or compound, that can conduct electricity under some conditions but not others, making the substance a good medium for the control of electrical current.

Throughout this specification, the term "semiconductor light-emitting device" (also being abbreviated as "SLED") means: a light-emitting diode; an organic light-emitting diode; a laser diode; or any other light-emitting device having one or more layers containing inorganic and/or organic semiconductor(s). Throughout this specification, the term "light-emitting diode" (herein also referred to as an "LED") means: a two-lead semiconductor light source having an active pn-junction. As examples, an LED may include a series of semiconductor layers that may be epitaxially grown on a substrate such as, for example, a substrate that includes sapphire, silicon, silicon carbide, gallium nitride or gallium arsenide. Further, for example, one or more semiconductor p-n junctions may be formed in these epitaxial layers. When a sufficient voltage is applied across the p-n junction, for example, electrons in the n-type semiconductor layers and holes in the p-type semiconductor layers may flow toward the p-n junction. As the electrons and holes flow toward each other, some of the electrons may recombine with corresponding holes, and emit photons. The energy release is called electroluminescence, and the color of the light, which corresponds to the energy of the photons, is determined by the energy band gap of the semiconductor. As examples, a spectral power distribution of the light generated by an LED may generally depend on the particular semiconductor materials used and on the structure of the thin epitaxial layers that make up the "active region" of the device, being the area where the light is generated. As examples, an LED may have a light-emissive electroluminescent layer including an inorganic semiconductor, such as a Group III-V semiconductor, examples including: gallium nitride; silicon; silicon carbide; and zinc oxide.

Throughout this specification, the term "organic light-emitting diode" (herein also referred to as an "OLED") means: an LED having a light-emissive electroluminescent layer including an organic semiconductor, such as small organic molecules or an organic polymer. It is understood throughout this specification that a semiconductor light-emitting device may include: a non-semiconductor-substrate or a semiconductor-substrate; and may include one or more electrically-conductive contact layers. Further, it is understood throughout this specification that an LED may include a substrate formed of materials such as, for example: silicon carbide; sapphire; gallium nitride; or silicon. It is additionally understood throughout this specification that a semiconductor light-emitting device may have a cathode contact

on one side and an anode contact on an opposite side, or may alternatively have both contacts on the same side of the device.

Further background information regarding semiconductor light-emitting devices is provided in the following documents, the entireties of all of which hereby are incorporated by reference herein: U.S. Pat. Nos. 7,564,180; 7,456,499; 7,213,940; 7,095,056; 6,958,497; 6,853,010; 6,791,119; 6,600,175; 6,201,262; 6,187,606; 6,120,600; 5,912,477; 5,739,554; 5,631,190; 5,604,135; 5,523,589; 5,416,342; 5,393,993; 5,359,345; 5,338,944; 5,210,051; 5,027,168; 5,027,168; 4,966,862; and 4,918,497; and U.S. Patent Application Publication Nos. 2014/0225511; 2014/0078715; 2013/0241392; 2009/0184616; 2009/0080185; 2009/0050908; 2009/0050907; 2008/0308825; 2008/0198112; 2008/0179611; 2008/0173884; 2008/0121921; 2008/0012036; 2007/0253209; 2007/0223219; 2007/0170447; 2007/0158668; 2007/0139923; and 2006/0221272.

Throughout this specification, the term "spectral power distribution" means: the emission spectrum of the one or more wavelengths of light emitted by a semiconductor light-emitting device. Throughout this specification, the term "peak wavelength" means: the wavelength where the spectral power distribution of a semiconductor light-emitting device reaches its maximum value as detected by a photo-detector. As an example, an LED may be a source of nearly monochromatic light and may appear to emit light having a single color. Thus, the spectral power distribution of the light emitted by such an LED may be centered about its peak wavelength. As examples, the "width" of the spectral power distribution of an LED may be within a range of between about 10 nanometers and about 30 nanometers, where the width is measured at half the maximum illumination on each side of the emission spectrum.

Throughout this specification, both of the terms "beam width" and "full-width-half-maximum" ("FWHM") mean: the measured angle, being collectively defined by two mutually-opposed angular directions away from a center emission direction of a visible-light beam, at which an intensity of the visible-light emissions is half of a maximum intensity measured at the center emission direction. Throughout this specification, in the case of a visible-light beam having a non-circular shape, e.g. a visible-light beam having an elliptical shape, then the terms "beam width" and "full-width-half-maximum" ("FWHM") mean: the measured maximum and minimum angles, being respectively defined in two mutually-orthogonal pairs of mutually-opposed angular directions away from a center emission direction of a visible-light beam, at which a respective intensity of the visible-light emissions is half of a corresponding maximum intensity measured at the center emission direction. Throughout this specification, the term "field angle" means: the measured angle, being collectively defined by two opposing angular directions away from a center emission direction of a visible-light beam, at which an intensity of the visible-light emissions is one-tenth of a maximum intensity measured at the center emission direction. Throughout this specification, in the case of a visible-light beam having a non-circular shape, e.g. a visible-light beam having an elliptical shape, then the term "field angle" means: the measured maximum and minimum angles, being respectively defined in two mutually-orthogonal pairs of mutually-opposed angular directions away from a center emission direction of a visible-light beam, at which a respective intensity of the visible-light emissions is one-tenth of a corresponding maximum intensity measured at the center emission direction.

Throughout this specification, the term "dominant wavelength" means: the wavelength of monochromatic light that has the same apparent color as the light emitted by a semiconductor light-emitting device, as perceived by the human eye. As an example, since the human eye perceives yellow and green light better than red and blue light, and because the light emitted by a semiconductor light-emitting device may extend across a range of wavelengths, the color perceived (i.e., the dominant wavelength) may differ from the peak wavelength.

Throughout this specification, the term "luminous flux", also referred to as "luminous power", means: the measure in lumens of the perceived power of light, being adjusted to reflect the varying sensitivity of the human eye to different wavelengths of light. Throughout this specification, the term "radiant flux" means: the measure of the total power of electromagnetic radiation without being so adjusted. Throughout this specification, the term "intensity" denotes "luminous intensity", being a measure of the wavelength-weighted power (luminous flux) emitted by a visible-light source in a particular direction per unit solid angle based on the standardized luminosity function of the sensitivity of human eyesight to various wavelengths of light. Throughout this specification, the term "central light-emission axis" means a direction along which the light emissions of a semiconductor light-emitting device have a greatest radiant flux. It is understood throughout this specification that light emissions "along a central light-emission axis" means light emissions that: include light emissions in the direction of the central light-emission axis; and may further include light emissions in a plurality of other generally similar directions.

It is understood throughout this specification that light emissions "along the longitudinal axis" means light emissions that: include light emissions in the directions of the longitudinal axis; and may further include light emissions in a plurality of other generally similar directions. It is understood throughout this specification that light emissions "in directions transverse to the longitudinal axis" means light emissions that: include light emissions in the directions being orthogonal to the longitudinal axis; and may further include light emissions in a plurality of other generally similar directions. It is understood throughout this specification that light emissions "in directions spaced apart from directions along the longitudinal axis" means light emissions in directions being similar to and spaced apart from the directions along the longitudinal axis. It is understood throughout this specification that light emissions "in directions spaced apart from directions transverse to the longitudinal axis" means light emissions in directions being similar to and spaced apart from the directions being transverse to the longitudinal axis.

Throughout this specification, the term "color bin" means: the designated empirical spectral power distribution and related characteristics of a particular semiconductor light-emitting device. For example, individual light-emitting diodes (LEDs) are typically tested and assigned to a designated color bin (i.e., "binned") based on a variety of characteristics derived from their spectral power distribution. As an example, a particular LED may be binned based on the value of its peak wavelength, being a common metric to characterize the color aspect of the spectral power distribution of LEDs. Examples of other metrics that may be utilized to bin LEDs include: dominant wavelength; and color point.

Throughout this specification, the term "luminescent" means: characterized by absorption of electromagnetic

radiation (e.g., visible-light, UV light or infrared light) causing the emission of light by, as examples: fluorescence; and phosphorescence.

Throughout this specification, the term "object" means a material article or device. Throughout this specification, the term "surface" means an exterior boundary of an object. Throughout this specification, the term "incident visible-light" means visible-light that propagates in one or more directions towards a surface. Throughout this specification, the term "any incident angle" means any one or more directions from which visible-light may propagate towards a surface. Throughout this specification, the term "reflective surface" means a surface of an object that causes incident visible-light, upon reaching the surface, to then propagate in one or more different directions away from the surface without passing through the object. Throughout this specification, the term "planar reflective surface" means a generally flat reflective surface.

Throughout this specification, the term "reflection value" means a percentage of a radiant flux of incident visible-light having a specified wavelength that is caused by a reflective surface of an object to propagate in one or more different directions away from the surface without passing through the object. Throughout this specification, the term "reflected light" means the incident visible-light that is caused by a reflective surface to propagate in one or more different directions away from the surface without passing through the object. Throughout this specification, the term "Lambertian reflection" means diffuse reflection of visible-light from a surface, in which the reflected light has uniform radiant flux in all of the propagation directions. Throughout this specification, the term "specular reflection" means mirror-like reflection of visible-light from a surface, in which light from a single incident direction is reflected into a single propagation direction. Throughout this specification, the term "spectrum of reflection values" means a spectrum of values of percentages of radiant flux of incident visible-light, the values corresponding to a spectrum of wavelength values of visible-light, that are caused by a reflective surface to propagate in one or more different directions away from the surface without passing through the object. Throughout this specification, the term "transmission value" means a percentage of a radiant flux of incident visible-light having a specified wavelength that is permitted by a reflective surface to pass through the object having the reflective surface. Throughout this specification, the term "transmitted light" means the incident visible-light that is permitted by a reflective surface to pass through the object having the reflective surface. Throughout this specification, the term "spectrum of transmission values" means a spectrum of values of percentages of radiant flux of incident visible-light, the values corresponding to a spectrum of wavelength values of visible-light, that are permitted by a reflective surface to pass through the object having the reflective surface. Throughout this specification, the term "absorption value" means a percentage of a radiant flux of incident visible-light having a specified wavelength that is permitted by a reflective surface to pass through the reflective surface and is absorbed by the object having the reflective surface. Throughout this specification, the term "spectrum of absorption values" means a spectrum of values of percentages of radiant flux of incident visible-light, the values corresponding to a spectrum of wavelength values of visible-light, that are permitted by a reflective surface to pass through the reflective surface and are absorbed by the object having the reflective surface. Throughout this specification, it is understood that a reflective surface, or an object, may have a spectrum of reflection values, and a spectrum of transmission values, and a spectrum of absorption values. The spectra of reflection values, absorption values, and transmission values of a reflective surface or of an object may be measured, for example, utilizing an ultraviolet-visible-near infrared (UV-VIS-NIR) spectrophotometer. Throughout this specification, the term "visible-light reflector" means an object having a reflective surface. In examples, a visible-light reflector may be selected as having a reflective surface characterized by light reflections that are more Lambertian than specular.

Throughout this specification, the term "lightguide" means a visible-light-transmissive body having a boundary being subject to the condition that visible-light rays traveling within the body to reach the boundary at an angle of incidence a that is larger than the critical angle will be reflected by the boundary and remain within the body. In a lightguide, visible-light rays will be subject to total internal reflection ("TIR") and so remain within the body if their angle of incidence a at the boundary satisfies the following condition derived from Snell's Law: $\alpha > \sin^{-1}(n_2/n_1)$ where n_1 is the refractive index of the body of the lightguide and n_2 is the refractive index of a medium outside the lightguide. In an example, the medium outside a lightguide may be air, having a refractive index n_2 being about 1. As another example, the medium outside of a lightguide may be another material having a lower refractive index than that of the body of the lightguide.

Throughout this specification, the term "lumiphor" means: a medium that includes one or more luminescent materials being positioned to absorb light that is emitted at a first spectral power distribution by a semiconductor light-emitting device, and to re-emit light at a second spectral power distribution in the visible or ultra violet spectrum being different than the first spectral power distribution, regardless of the delay between absorption and re-emission. Lumiphors may be categorized as being down-converting, i.e., a material that converts photons to a lower energy level (longer wavelength); or up-converting, i.e., a material that converts photons to a higher energy level (shorter wavelength). As an example, a lumiphor may be configured for down-converting visible-light emissions of a semiconductor light-emitting device having a first dominant wavelength into further visible-light emissions having a second dominant wavelength being less than the first dominant wavelength. As another example, a lumiphor may be configured for up-converting visible-light emissions of a semiconductor light-emitting device having a first dominant wavelength into further visible-light emissions having a second dominant wavelength being greater than the first dominant wavelength. As examples, a luminescent material may include: a phosphor; a quantum dot; a quantum wire; a quantum well; a photonic nanocrystal; a semiconducting nanoparticle; a scintillator; a lumiphoric ink; a lumiphoric organic dye; a day glow tape; a phosphorescent material; or a fluorescent material. Throughout this specification, the term "quantum material" means any luminescent material that includes: a quantum dot; a quantum wire; or a quantum well. Some quantum materials may absorb and emit light at spectral power distributions having narrow wavelength ranges, for example, wavelength ranges having spectral widths being within ranges of between about 25 nanometers and about 50 nanometers. In examples, two or more different quantum materials may be included in a lumiphor, such that each of the quantum materials may have a spectral power distribution for light emissions that may not overlap with a spectral power distribution for light absorption of any of the one or

more other quantum materials. In these examples, cross-absorption of light emissions among the quantum materials of the lumiphor may be minimized. As examples, a lumiphor may include one or more layers or bodies that may contain one or more luminescent materials that each may be: (1) coated or sprayed directly onto an semiconductor light-emitting device; (2) coated or sprayed onto surfaces of a lens or other elements of packaging for an semiconductor light-emitting device; (3) dispersed in a matrix medium; or (4) included within a clear encapsulant (e.g., an epoxy-based or silicone-based curable resin or glass or ceramic) that may be positioned on or over an semiconductor light-emitting device. A lumiphor may include one or multiple types of luminescent materials. Other materials may also be included with a lumiphor such as, for example, fillers, diffusants, colorants, or other materials that may as examples improve the performance of or reduce the overall cost of the lumiphor. In examples where multiple types of luminescent materials may be included in a lumiphor, such materials may, as examples, be mixed together in a single layer or deposited sequentially in successive layers.

Throughout this specification, the term "volumetric lumiphor" means a lumiphor being distributed in an object having a shape including defined exterior surfaces. In some examples, a volumetric lumiphor may be formed by dispersing a lumiphor in a volume of a matrix medium having suitable spectra of visible-light transmission values and visible-light absorption values. As examples, such spectra may be affected by a thickness of the volume of the matrix medium, and by a concentration of the lumiphor being distributed in the volume of the matrix medium. In examples, the matrix medium may have a composition that includes polymers or oligomers of: a polycarbonate; a silicone; an acrylic; a glass; a polystyrene; or a polyester such as polyethylene terephthalate. Throughout this specification, the term "remotely-located lumiphor" means a lumiphor being spaced apart at a distance from and positioned to receive light that is emitted by a semiconductor light-emitting device. As an example of a remotely-located lumiphor: one or more semiconductor light-emitting devices and one or more lumiphors may be mutually spaced apart and included together in a package including electrical contacts for energizing the devices. In another example of a remotely-located lumiphor: a semiconductor light-emitting device may be included in a package; and a lumiphor may be positioned outside of the package.

Throughout this specification, the term "light-scattering particles" means small particles formed of a non-luminescent, non-wavelength-converting material. In some examples, a volumetric lumiphor may include light-scattering particles being dispersed in the volume of the matrix medium for causing some of the light emissions having the first spectral power distribution to be scattered within the volumetric lumiphor. As an example, causing some of the light emissions to be so scattered within the matrix medium may cause the luminescent materials in the volumetric lumiphor to absorb more of the light emissions having the first spectral power distribution. In examples, the light-scattering particles may include: rutile titanium dioxide; anatase titanium dioxide; barium sulfate; diamond; alumina; magnesium oxide; calcium titanate; barium titanate; strontium titanate; or barium strontium titanate. In examples, light-scattering particles may have particle sizes being within a range of about 0.01 micron (10 nanometers) and about 2.0 microns (2,000 nanometers).

In some examples, a visible-light reflector may be formed by dispersing light-scattering particles having a first index of refraction in a volume of a matrix medium having a second index of refraction being suitably different from the first index of refraction for causing the volume of the matrix medium with the dispersed light-scattering particles to have suitable spectra of reflection values, transmission values, and absorption values for functioning as a visible-light reflector. As examples, such spectra may be affected by a thickness of the volume of the matrix medium, and by a concentration of the light-scattering particles being distributed in the volume of the matrix medium, and by physical characteristics of the light-scattering particles such as the particle sizes and shapes, and smoothness or roughness of exterior surfaces of the particles. In an example, the smaller the difference between the first and second indices of refraction, the more light-scattering particles may need to be dispersed in the volume of the matrix medium to achieve a given amount of light-scattering. As examples, the matrix medium for forming a visible-light reflector may have a composition that includes polymers or oligomers of: a polycarbonate; a silicone; an acrylic; a glass; a polystyrene; or a polyester such as polyethylene terephthalate. In further examples, the light-scattering particles may include: rutile titanium dioxide; anatase titanium dioxide; barium sulfate; diamond; alumina; magnesium oxide; calcium titanate; barium titanate; strontium titanate; or barium strontium titanate. In other examples, a visible-light reflector may include a reflective polymeric or metallized surface formed on a visible-light-transmissive polymeric or metallic object such as, for example, a volume of a matrix medium. Additional examples of visible-light reflectors may include microcellular foamed polyethylene terephthalate sheets ("MCPET"). Suitable visible-light reflectors may be commercially available under the trade names White Optics® and MIRO® from WhiteOptics LLC, 243-G Quigley Blvd., New Castle, Delaware 19720 USA. Suitable MCPET visible-light reflectors may be commercially available from the Furukawa Electric Co., Ltd., Foamed Products Division, Tokyo, Japan. Additional suitable visible-light reflectors may be commercially available from CVI Laser Optics, 200 Dorado Place SE, Albuquerque, New Mexico 87123 USA.

In some examples, a converging or diverging lens may be formed as a volume of a matrix medium having a suitable shape for functioning as a lens. In further examples, forming a diverging lens may include dispersing light-scattering particles having a first index of refraction in a volume of a matrix medium having a second index of refraction being suitably different from the first index of refraction for causing the volume of the matrix medium with the dispersed light-scattering particles to have suitable light-scattering value for functioning as a diverging lens. As examples, the matrix medium for forming a lens may have a composition that includes polymers or oligomers of: a polycarbonate; a silicone; an acrylic; a glass; a polystyrene; or a polyester such as polyethylene terephthalate. In further examples, the light-scattering particles may include: rutile titanium dioxide; anatase titanium dioxide; barium sulfate; diamond; alumina; magnesium oxide; calcium titanate; barium titanate; strontium titanate; or barium strontium titanate.

In further examples, a volumetric lumiphor and a visible-light reflector may be integrally formed. As examples, a volumetric lumiphor and a visible-light reflector may be integrally formed in respective layers of a volume of a matrix medium, including a layer of the matrix medium having a dispersed lumiphor, and including another layer of the same or a different matrix medium having light-scattering particles being suitably dispersed for causing the another layer to have suitable spectra of reflection values, transmis-

sion values, and absorption values for functioning as the visible-light reflector. In other examples, an integrally-formed volumetric lumiphor and visible-light reflector may incorporate any of the further examples of variations discussed above as to separately-formed volumetric lumiphors and visible-light reflectors.

Throughout this specification, the term "phosphor" means: a material that exhibits luminescence when struck by photons. Examples of phosphors that may utilized include: $CaAlSiN_3$:Eu, $SrAlSiN_3$:Eu, $CaAlSiN_3$:Eu, $Ba_3Si_6O_{12}N_2$:Eu, Ba_2SiO_4:Eu, Sr_2SiO_4:Eu, Ca_2SiO_4:Eu, $Ca_3Sc_2Si_3O_{12}$:Ce, $Ca_3Mg_2Si_3O_{12}$:Ce, $CaSc_2O_4$:Ce, $CaSi_2O_2N_2$:Eu, $SrSi_2O_2N_2$:Eu, $BaSi_2O_2N_2$:Eu, $Ca_5(PO_4)_3Cl$:Eu, $Ba_5(PO_4)_3Cl$:Eu, $Cs_2CaP_2O_7$, $Cs_2SrP_2O_7$, $SrGa_2S_4$:Eu, $Lu_3Al_5O_{12}$:Ce, $Ca_8Mg(SiO_4)_4Cl_2$:Eu, $Sr_8Mg(SiO_4)_4Cl_2$:Eu, $La_3Si_6N_{11}$:Ce, $Y_3Al_5O_{12}$:Ce, $Y_3Ga_5O_{12}$:Ce, $Gd_3Al_5O_{12}$:Ce, $Gd_3Ga_5O_{12}$:Ce, $Tb_3Al_5O_{12}$:Ce, $Tb_3Ga_5O_{12}$:Ce, $Lu_3Ga_5O_{12}$:Ce, (SrCa)$AlSiN_3$:Eu, LuAG:Ce, $(Y,Gd)_2Al_5)_{12}$:Ce, CaS:Eu, SrS:Eu, $SrGa_2S_4$:E_4, $Ca_2(Sc,Mg)_2SiO_{12}$:Ce, $Ca_2Sc_2Si_2)_{12}$:C2, $Ca_2Sc_2O_4$:Ce, $Ba_2Si_6O_{12}N_2$:Eu, (Sr,Ca)$AlSiN_2$:Eu, and $CaAlSiN_2$:Eu.

Throughout this specification, the term "quantum dot" means: a nanocrystal made of semiconductor materials that are small enough to exhibit quantum mechanical properties, such that its excitons are confined in all three spatial dimensions.

Throughout this specification, the term "quantum wire" means: an electrically conducting wire in which quantum effects influence the transport properties.

Throughout this specification, the term "quantum well" means: a thin layer that can confine (quasi-)particles (typically electrons or holes) in the dimension perpendicular to the layer surface, whereas the movement in the other dimensions is not restricted.

Throughout this specification, the term "photonic nanocrystal" means: a periodic optical nanostructure that affects the motion of photons, for one, two, or three dimensions, in much the same way that ionic lattices affect electrons in solids.

Throughout this specification, the term "semiconducting nanoparticle" means: a particle having a dimension within a range of between about 1 nanometer and about 100 nanometers, being formed of a semiconductor.

Throughout this specification, the term "scintillator" means: a material that fluoresces when struck by photons.

Throughout this specification, the term "lumiphoric ink" means: a liquid composition containing a luminescent material. For example, a lumiphoric ink composition may contain semiconductor nanoparticles. Examples of lumiphoric ink compositions that may be utilized are disclosed in Cao et al., U.S. Patent Application Publication No. 20130221489 published on Aug. 29, 2013, the entirety of which hereby is incorporated herein by reference.

Throughout this specification, the term "lumiphoric organic dye" means an organic dye having luminescent up-converting or down-converting activity. As an example, some perylene-based dyes may be suitable.

Throughout this specification, the term "day glow tape" means: a tape material containing a luminescent material.

Throughout this specification, the term "CIE 1931 XY chromaticity diagram" means: the 1931 International Commission on Illumination two-dimensional chromaticity diagram, which defines the spectrum of perceived color points of visible-light by (x,y) pairs of chromaticity coordinates that fall within a generally U-shaped area that includes all of the hues perceived by the human eye. Each of the x and y axes of the CIE 1931 XY chromaticity diagram has a scale of between 0.0 and 0.8. The spectral colors are distributed around the perimeter boundary of the chromaticity diagram, the boundary encompassing all of the hues perceived by the human eye. The perimeter boundary itself represents maximum saturation for the spectral colors. The CIE 1931 XY chromaticity diagram is based on the three-dimensional CIE 1931 XYZ color space. The CIE 1931 XYZ color space utilizes three color matching functions to determine three corresponding tristimulus values which together express a given color point within the CIE 1931 XYZ three-dimensional color space. The CIE 1931 XY chromaticity diagram is a projection of the three-dimensional CIE 1931 XYZ color space onto a two-dimensional (x,y) space such that brightness is ignored. A technical description of the CIE 1931 XY chromaticity diagram is provided in, for example, the "Encyclopedia of Physical Science and Technology", vol. 7, pp. 230-231 (Robert A Meyers ed., 1987); the entirety of which hereby is incorporated herein by reference. Further background information regarding the CIE 1931 XY chromaticity diagram is provided in Harbers et al., U.S. Patent Application Publication No. 2012/0224177A1 published on Sep. 6, 2012, the entirety of which hereby is incorporated herein by reference.

Throughout this specification, the term "color point" means: an (x,y) pair of chromaticity coordinates falling within the CIE 1931 XY chromaticity diagram. Color points located at or near the perimeter boundary of the CIE 1931 XY chromaticity diagram are saturated colors composed of light having a single wavelength, or having a very small spectral power distribution. Color points away from the perimeter boundary within the interior of the CIE 1931 XY chromaticity diagram are unsaturated colors that are composed of a mixture of different wavelengths.

Throughout this specification, the term "combined light emissions" means: a plurality of different light emissions that are mixed together. Throughout this specification, the term "combined color point" means: the color point, as perceived by human eyesight, of combined light emissions. Throughout this specification, "substantially constant" combined color points are: color points of combined light emissions that are perceived by human eyesight as being uniform, i.e., as being of the same color. Throughout this specification, the phrase "substantially greater" as describing an intensity of a first visible-light source in comparison with that of a second visible-light source means that the intensity of the first visible-light source is noticeably greater to a casual observer than the intensity of the second visible-light source.

Throughout this specification, the phrase "relatively high" as describing an intensity of a first visible-light source in comparison with that of a second visible-light source means that the intensity of the first visible-light source is at least marginally greater to a casual observer than the intensity of the second visible-light source. Throughout this specification, the phrase "relatively low" as describing an intensity of a first visible-light source in comparison with that of a second visible-light source means that the intensity of the first visible-light source is at least marginally lower to a casual observer than the intensity of the second visible-light source.

Throughout this specification, it is understood that a plurality of semiconductor light-emitting devices may be collectively configured for generating visible-light emissions having a perceived color point, wherein a plurality of individual ones among the plurality of semiconductor light-emitting devices may each emit visible-light having a different color point. Devices and methods for suitably gener-

ating visible-light emissions having such a perceived color point from a plurality of semiconductor light-emitting devices that may have different color points are disclosed in commonly-owned U.S. Pat. No. 10,701,775 issued on Jun. 30, 2020 and entitled "Methods for Generating Melatonin-Response-Tuned White Light with High Color Rendering," the entirety of which hereby is incorporated herein by reference. Further devices and methods for suitably generating visible-light emissions having such a perceived color point from a plurality of semiconductor light-emitting devices that may have different color points are disclosed in commonly-owned U.S. Pat. No. 10,827,580 issued on Nov. 3, 2020 and entitled "Two-Channel Tunable Lighting Systems With Controllable Equivalent Melanopic Lux and Correlated Color Temperature Outputs," the entirety of which hereby is incorporated herein by reference. Equivalent Melanopic Lux (hereinafter "EML") provides a measure of photoreceptive input to circadian and neurophysiological light responses in humans, as described in Lucas et al., "Measuring and using light in the melanopsin age." Trends in Neurosciences, January 2014, Vol. 37, No. 1, pages 1-9, which is incorporated by reference herein in its entirety, including all appendices. Melanopic lux is weighted to a photopigment with λmax 480 nanometers (nm) with pre-receptoral filtering based on a 32 year old standard observer, as described more fully in the Appendix A, Supplementary Data to Lucas et al. (2014), User Guide: Irradiance Toolbox (Oxford 18 Oct. 2013), University of Manchester, Lucas Group, which is incorporated by reference herein in its entirety. EML values are expressed as the ratio of melanopic lux to a fixed luminous flux (lux) of 1000 lumens. Beneficial biological effects on users may be obtained by providing illumination having a relatively high EML during the local daytime and providing a relatively low EML during the local nighttime. As examples, a daytime local EML value of at least about 200/1000, or being as high as about 525/1000, may be utilized. In further examples, a nighttime local EML value of less than about 200/1000, or being as low as about 45/1000, may be utilized.

Circadian illuminance (CLA) is a measure of circadian effective light, and spectral irradiance distribution of the light incident at the cornea weighted to reflect the spectral sensitivity of the human circadian system as measured by acute melatonin suppression after a one-hour exposure, and CS, which is the effectiveness of the spectrally weighted irradiance at the cornea from threshold (CS=0.1) to saturation (CS=0.7). The values of CLA are scaled such that an incandescent source at 2856K (known as CIE Illuminant A) which produces 1000 lux (luminous flux) will produce 1000 units of circadian lux (CLA). CS values are transformed CLA values and correspond to relative melatonin suppression after one hour of light exposure for a 2.3 mm diameter pupil during the mid-point of melatonin production. CS is calculated from CS=0.7×(1−11+(CLA 355.7)^1.126). The calculation of CLA is more fully described in Rea et al., "Modelling the spectral sensitivity of the human circadian system," Lighting Research and Technology, 2011; 0: 1-12, and Figueiro et al., "Designing with Circadian Stimulus", October 2016, LD+A Magazine, Illuminating Engineering Society of North America, both of which are incorporated by reference herein in their entireties. Figueiro et al. teaches that exposure to a CS of 0.3 or greater at the eye, for at least one hour in the early part of the day, is effective for stimulating the circadian system and is associated with better sleep and improved behavior and mood.

Throughout this specification, the term "Planckian—black-body locus" means the curve within the CIE 1931 XY chromaticity diagram that plots the chromaticity coordinates (i.e., color points) that obey Planck's equation: $E(\lambda)=A\lambda^{-5}/(eB/T-1)$, where E is the emission intensity, X is the emission wavelength, T is the color temperature in degrees Kelvin of a black-body radiator, and A and B are constants. The Planckian—black-body locus corresponds to the locations of color points of light emitted by a black-body radiator that is heated to various temperatures. As a black-body radiator is gradually heated, it becomes an incandescent light emitter (being referred to throughout this specification as an "incandescent light emitter") and first emits reddish light, then yellowish light, and finally bluish light with increasing temperatures. This incandescent glowing occurs because the wavelength associated with the peak radiation of the black-body radiator becomes progressively shorter with gradually increasing temperatures, consistent with the Wien Displacement Law. The CIE 1931 XY chromaticity diagram further includes a series of lines each having a designated corresponding temperature listing in units of degrees Kelvin spaced apart along the Planckian—black-body locus and corresponding to the color points of the incandescent light emitted by a black-body radiator having the designated temperatures. Throughout this specification, such a temperature listing is referred to as a "correlated color temperature" (herein also referred to as the "CCT") of the corresponding color point. Correlated color temperatures are expressed herein in units of degrees Kelvin (K). Throughout this specification, each of the lines having a designated temperature listing is referred to as an "isotherm" of the corresponding correlated color temperature.

Throughout this specification, the term "chromaticity bin" means: a bounded region within the CIE 1931 XY chromaticity diagram. As an example, a chromaticity bin may be defined by a series of chromaticity (x,y) coordinates, being connected in series by lines that together form the bounded region. As another example, a chromaticity bin may be defined by several lines or other boundaries that together form the bounded region, such as: one or more isotherms of CCT's; and one or more portions of the perimeter boundary of the CIE 1931 chromaticity diagram.

Throughout this specification, the term "delta(uv)" means: the shortest distance of a given color point away from (i.e., above or below) the Planckian—black-body locus. In general, color points located at a delta(uv) of about equal to or less than 0.015 may be assigned a correlated color temperature (CCT).

Throughout this specification, the term "blue light" means: light having a dominant wavelength being within a range of between about 480 nanometers and about 490 nanometers.

Throughout this specification, the term "cyan light" means: light having a dominant wavelength being within a range of between about 491 nanometers and about 520 nanometers.

Throughout this specification, the term "green light" means: light having a dominant wavelength being within a range of between about 521 nanometers and about 540 nanometers.

Throughout this specification, the term "cyan-ish color point" means: a perceived color point having a dominant wavelength being within a range of between about 480 nanometers and about 540 nanometers. Likewise, the term "cyan-ish dominant wavelength" means a dominant wavelength being within a range of between about 480 nanometers and about 540 nanometers.

Throughout this specification, the term "cyan-ish sky color" means: a sky color having a perceived color point having a dominant wavelength being within a range of between about 480 nanometers and about 540 nanometers (herein referred to as a "cyan-ish sky color").

Throughout this specification, the term "yellow light" means: light having a dominant wavelength being within a range of between about 575 nanometers and about 579 nanometers.

Throughout this specification, the term "amber light" means: light having a dominant wavelength being within a range of between about 580 nanometers and about 581 nanometers.

Throughout this specification, the term "yellow-orange light" means: light having a dominant wavelength being within a range of between about 582 nanometers and about 586 nanometers.

Throughout this specification, the term "orange light" means: light having a dominant wavelength being within a range of between about 587 nanometers and about 599 nanometers.

Throughout this specification, the term "red-orange light" means: light having a dominant wavelength being within a range of between about 600 nanometers and about 620 nanometers.

Throughout this specification, the term "orange-ish color point" means: a perceived color point having a dominant wavelength being within a range of between about 575 nanometers and about 620 nanometers (herein referred to as an "orange-ish color point").

Throughout this specification, the term "orange-ish sky color" means: a sky color having a perceived color point having a dominant wavelength being within a range of between about 575 nanometers and about 620 nanometers (herein referred to as an "orange-ish sky color").

Throughout this specification, the term "visible-light" means light having one or more wavelengths being within a range of between about 380 nanometers and about 670 nanometers; and "visible-light spectrum" means the range of wavelengths of between about 380 nanometers and about 670 nanometers.

Throughout this specification, the term "white light" means: light having a color point located at a delta(uv) of about equal to or less than 0.006 and having a CCT being within a range of between about 10000K and about 1800K (herein referred to as a "white color point."). Many different hues of light may be perceived as being "white." For example, some "white" light, such as light generated by a tungsten filament incandescent lighting device, may appear yellowish in color, while other "white" light, such as light generated by some fluorescent lighting devices, may appear more bluish in color.

As examples, white light having a CCT within a range of between about 3100K and about 2400K may appear whitish-yellow in color and may be referred to as "warm white" light, while white light having a CCT within a range of between about 2399K and about 1800K may appear reddish or yellowish in color and may be referred to as "very warm white" light. As further examples, white light having a CCT within a range of between about 4500K and about 3101K may appear bluish-white in color and may be referred to as "cool white" light, while white light having a CCT within a range of between about 10,000K and about 4500K may appear bluish in color and may be referred to as "very cool white" light.

"White light" includes light having a spectral power distribution of wavelengths including red, green and blue color points. In an example, a CCT of a lumiphor may be tuned by selecting one or more particular luminescent materials to be included in the lumiphor. For example, light emissions from a semiconductor light-emitting device that includes three separate emitters respectively having red, green and blue color points with an appropriate spectral power distribution may have a white color point. As another example, light perceived as being "white" may be produced by mixing light emissions from a semiconductor light-emitting device having a blue, greenish-blue or purplish-blue color point together with light emissions having a yellow color point being produced by passing some of the light emissions having the blue, greenish-blue or purplish-blue color point through a lumiphor to down-convert them into light emissions having the yellow color point. General background information on systems and processes for generating light perceived as being "white" is provided in "Class A Color Designation for Light Sources Used in General Illumination", Freyssinier and Rea, *J. Light & Vis. Env.*, Vol. 37, No. 2 & 3 (Nov. 7, 2013, Illuminating Engineering Institute of Japan), pp. 10-14; the entirety of which hereby is incorporated herein by reference.

Throughout this specification, the term "color rendition index" (herein also referred to as "CRI-Ra") means: the quantitative measure on a scale of 1-100 of the capability of a given light source to accurately reveal the colors of one or more objects having designated reference colors, in comparison with the capability of a black-body radiator to accurately reveal such colors. The CRI-Ra of a given light source is a modified average of the relative measurements of color renditions by that light source, as compared with color renditions by a reference black-body radiator, when illuminating objects having the designated reference color(s). The CRI is a relative measure of the shift in perceived surface color of an object when illuminated by a particular light source versus a reference black-body radiator. The CRI-Ra will equal 100 if the color coordinates of a set of test colors being illuminated by the given light source are the same as the color coordinates of the same set of test colors being irradiated by the black-body radiator. The CRI system is administered by the International Commission on Illumination (CIE). The CIE selected fifteen test color samples (respectively designated as R_{1-15}) to grade the color properties of a white light source. The first eight test color samples (respectively designated as R_{1-8}) are relatively low saturated colors and are evenly distributed over the complete range of hues. These eight samples are employed to calculate the general color rendering index Ra. The general color rendering index Ra is simply calculated as the average of the first eight color rendering index values, R_{1-8}. An additional seven samples (respectively designated as R_{9-15}) provide supplementary information about the color rendering properties of a light source; the first four of them focus on high saturation, and the last three of them are representative of well-known objects. A set of color rendering index values, R_{1-15}, can be calculated for a particular correlated color temperature (CCT) by comparing the spectral response of a light source against that of each test color sample, respectively. As another example, the CRI-Ra may consist of one test color, such as the designated red color of R_9.

As examples, sunlight generally has a CRI-Ra of about 100; incandescent light bulbs generally have a CRI-Ra of about 95; fluorescent lights generally have a CRI-Ra of about 70 to 85; and monochromatic light sources generally have a CRI-Ra of about zero. As an example, a light source for general illumination applications where accurate rendition of object colors may not be considered important may

generally need to have a CRI-Ra value being within a range of between about 70 and about 80. Further, for example, a light source for general interior illumination applications may generally need to have a CRI-Ra value being at least about 80. As an additional example, a light source for general illumination applications where objects illuminated by the lighting device may be considered to need to appear to have natural coloring to the human eye may generally need to have a CRI-Ra value being at least about 85. Further, for example, a light source for general illumination applications where good rendition of perceived object colors may be considered important may generally need to have a CRI-Ra value being at least about 90.

Throughout this specification, the term "in contact with" means: that a first object, being "in contact with" a second object, is in either direct or indirect contact with the second object. Throughout this specification, the term "in indirect contact with" means: that the first object is not in direct contact with the second object, but instead that there are a plurality of objects (including the first and second objects), and each of the plurality of objects is in direct contact with at least one other of the plurality of objects (e.g., the first and second objects are in a stack and are separated by one or more intervening layers). Throughout this specification, the term "in direct contact with" means: that the first object, which is "in direct contact" with a second object, is touching the second object and there are no intervening objects between at least portions of both the first and second objects.

Throughout this specification, the term "spectrophotometer" means: an apparatus that can measure a light beam's intensity as a function of its wavelength and calculate its total luminous flux.

Throughout this specification, the term "integrating sphere—spectrophotometer" means: a spectrophotometer operationally connected with an integrating sphere. An integrating sphere (also known as an Ulbricht sphere) is an optical component having a hollow spherical cavity with its interior covered with a diffuse white reflective coating, with small holes for entrance and exit ports. Its relevant property is a uniform scattering or diffusing effect. Light rays incident on any point on the inner surface are, by multiple scattering reflections, distributed equally to all other points. The effects of the original direction of light are minimized. An integrating sphere may be thought of as a diffuser which preserves power but destroys spatial information. Another type of integrating sphere that can be utilized is referred to as a focusing or Coblentz sphere. A Coblentz sphere has a mirror-like (specular) inner surface rather than a diffuse inner surface. Light scattered by the interior of an integrating sphere is evenly distributed over all angles. The total power (radiant flux) of a light source can then be measured without inaccuracy caused by the directional characteristics of the source. Background information on integrating sphere—spectrophotometer apparatus is provided in Liu et al., U.S. Pat. No. 7,532,324 issued on May 12, 2009, the entirety of which hereby is incorporated herein by reference. It is understood throughout this specification that color points may be measured, for example, by utilizing a spectrophotometer, such as an integrating sphere—spectrophotometer. The spectra of reflection values, absorption values, and transmission values of a reflective surface or of an object may be measured, for example, utilizing an ultraviolet-visible-near infrared (UV-VIS-NIR) spectrophotometer.

Throughout this specification, the term "diffuse refraction" means refraction from an object's surface that scatters the visible-light emissions, casting multiple jittered light rays forming combined light emissions having a combined color point.

Throughout this specification, the term "control facility" means: a device being suited for controlling the transmission of a variable power input to one or more semiconductor light-emitting devices being included in a visible-light source. As an example, a control facility may include a microprocessor, and may provide the variable power input by, as examples: constant current reduction (CCR); constant voltage (CV); or pulse-width-modulation (PWM). Throughout this specification, it is understood that the term "microprocessor" means a multipurpose, programmable device that accepts digital data as input, and processes the digital data according to instructions stored in the programmable device's memory, and provides results as output. As further examples, a control facility may have conductors for transmitting the variable power input, being electrically connected with the semiconductor light-emitting devices. As further examples, a control facility may include: (1) one or more electrical components employed in converting electrical power (e.g., from AC to DC and/or from one voltage to another voltage); (2) one or more electronic components employed in driving one or more semiconductor light-emitting devices, e.g., running one or more semiconductor light-emitting devices intermittently and/or adjusting the power input as supplied to one or more of the semiconductor light-emitting devices in response to a user command such as a dimmer command, or a command received from the control facility; (3) one or more circuit boards (e.g., a metal core circuit board) for supporting and/or providing a variable power input to semiconductor light-emitting devices or any other electrical components, and/or (4) one or more wires connecting any auxiliary electrical components, such as bridge rectifiers, transformers, or power factor controllers. In examples, a control facility may include wired or wireless user command input devices, examples of which may include wired dual in-line packaged (DIP) switches, other wired switches, or wireless mobile communicator applications. Throughout this specification, the term "coupled" means positioned for transmission of a power input to one or more semiconductor light-emitting devices of a visible-light source.

Throughout this specification, the term "ambient space" means any interior or exterior location where a lighting controller or a lighting system may be utilized. As examples, an "ambient space" may be a room inside a building or may be an exterior location. Throughout this specification, the term "boundary" means a portion of a perimeter of an ambient space. As examples, a "boundary" may be a wall, floor or ceiling of a room; or may be a portion of a perimeter of an exterior location. Throughout this specification, the term "down-light" means visible-light emissions being directed in a generally downward direction within an ambient space. Throughout this specification, the term "up-light" means visible-light emissions being directed in a generally upward direction within an ambient space. Throughout this specification, the term "lateral-light" means visible-light emissions being directed in a generally lateral direction within an ambient space.

Throughout this specification, each of the words "include", "contain", and "have" is interpreted broadly as being open to the addition of further like elements as well as to the addition of unlike elements.

It is understood throughout this specification that numbering of the names of elements as being "first", "second"

etcetera, is solely for purposes of clarity in referring to such elements in connection with various examples of lighting systems.

FIG. **1** is a schematic top perspective view showing an example [**100**] of an implementation of a lighting system. FIG. **2** is a schematic cross-sectional view taken along the line **2-2** showing the example [**100**] of the lighting system. FIG. **3** is a schematic cross-sectional view taken along the line **3-3** showing the example [**100**] of the lighting system. FIG. **4** is a schematic bottom perspective view taken along the line **4** showing the example [**100**] of an implementation of a lighting system.

Examples [**100**], [**500**], [**900**], [**1300**], [**1800**], [**2300**], [**2800**], [**3700**], and [**4000**] of lighting systems are discussed herein, respectively, in connection with FIGS. **1-4**; **5-8**; **9-12**; **13-16**; **18-21**; **22-26**; **27-31**; **37-39**; and **40-42**. Examples [**1700**], [**2200**], [**2700**], [**3200**], and [**3300**] of lighting controllers are discussed herein, respectively, in connection with FIGS. **17-21**; **22-26**; **27-31**; **32**, **1-4**; and **33**, **9-12**. Examples [**3400**], [**3500**], [**3600**] of lighting control methods are discussed herein, respectively, in connection with FIGS. **34**, **17-21**; **35**, **22-26**; and **36**, **27-31**. It is understood throughout this specification that a lighting system [**100**], [**500**], [**900**], [**1300**], [**1800**], [**2300**], [**2800**], [**3700**], [**4000**] may include any of the features or combinations of features that are disclosed in connection with any one or more of such lighting systems. It is further understood throughout this specification that each one of the examples [**1700**], [**2200**], [**2700**], [**3200**], [**3300**] of lighting controllers may be utilized together with a lighting system [**100**], [**500**], [**900**], [**1300**], [**1800**], [**2300**], [**2800**], [**3700**], [**4000**] including any of the features or combinations of features that are disclosed in connection with any one or more of such lighting systems. It is additionally understood throughout this specification that each one of the examples [**3400**], [**3500**], [**3600**] of the lighting control methods may be utilized together with any of the examples [**1700**], [**2200**], [**2700**], [**3200**], and [**3300**] of the lighting controllers, for controlling a lighting system [**100**], [**500**], [**900**], [**1300**], [**1800**], [**2300**], [**2800**], [**3700**], [**4000**] including any of the features or combinations of features that are disclosed in connection with any one or more of such lighting systems. Accordingly, FIGS. **1-42** and the entireties of the discussions of the examples [**100**], [**500**], [**900**], [**1300**], [**1800**], [**2300**], [**2800**], [**3700**], [**4000**] of lighting systems and the entireties of the discussions of the examples [**1700**], [**2200**], [**2700**], [**3200**], and [**3300**] of the lighting controllers and the entireties of the discussions of the examples [**3400**], [**3500**], [**3600**] of lighting control methods are hereby incorporated into the following discussion of the example [**100**] of an implementation of the lighting system.

As shown in FIGS. **1-4**, the example [**100**] of the implementation of the lighting system includes: an edge-lit lightguide panel [**102**]; another edge-lit lightguide panel [**104**]; and a total internal reflection lens [**106**]. In the example [**100**], the edge-lit lightguide panel [**102**] is extended along a longitudinal axis [**108**] of the lighting system. The edge-lit lightguide panel [**102**] in the example [**100**] of the lighting system further has a pair of mutually-opposing panel surfaces [**110**], [**112**]. The edge-lit lightguide panel [**102**] in the example [**100**] of the lighting system also has a peripheral edge [**114**] being extended along and spaced transversely away from the longitudinal axis [**108**]. In the example [**100**] of the lighting system, a one [**112**] of the pair of panel surfaces includes a first light output interface [**116**].

The example [**100**] of the lighting system also includes a visible-light source [**118**] including a plurality of semiconductor light-emitting devices [**120**], [**122**]. In the example [**100**] of the lighting system, the visible-light source [**118**] is configured for generating visible-light emissions [**124**], [**126**] from the plurality of semiconductor light-emitting devices [**120**], [**122**]. Further in the example [**100**] of the lighting system, the visible-light source [**118**] is located along the peripheral edge [**114**] for directing the visible-light emissions [**124**], [**126**] into the edge-lit lightguide panel [**102**].

In the example [**100**] of the lighting system, the another edge-lit lightguide panel [**104**] is extended along the longitudinal axis [**108**]. Additionally in the example [**100**] of the lighting system, the another edge-lit lightguide panel [**104**] has another pair of mutually-opposing panel surfaces [**128**], [**130**]. In the example [**100**] of the lighting system, the another edge-lit lightguide panel [**104**] has another peripheral edge [**132**] being extended along and spaced transversely away from the longitudinal axis [**108**]. Further, a one [**130**] of the another pair of panel surfaces in the example [**100**] of the lighting system includes a second light output interface [**134**].

The example [**100**] of the lighting system additionally includes another visible-light source [**136**] including another plurality of semiconductor light-emitting devices [**138**], [**140**]. In the example [**100**] of the lighting system, the another visible-light source [**136**] is configured for generating additional visible-light emissions [**142**], [**144**] from the another plurality of semiconductor light-emitting devices [**138**], [**140**]. Further in the example [**100**] of the lighting system, the another visible-light source [**136**] is located along the another peripheral edge [**132**] for directing the additional visible-light emissions [**142**], [**144**] into the another edge-lit lightguide panel [**104**].

In the example [**100**] of the lighting system, the total internal reflection lens [**106**] has a central light-emission axis [**146**] being transverse to the longitudinal axis [**108**]. The total internal reflection lens [**106**] in the example [**100**] of the lighting system includes a third light output interface [**148**] being located between the first and second light output interfaces [**116**], [**134**]. In the example [**100**] of the lighting system, the third light output interface [**148**] is spaced apart from a central light input interface [**150**] by a total internal reflection side surface [**152**]. The total internal reflection side surface [**152**] in the example [**100**] of the lighting system is extended along the central light-emission axis [**146**]. In the example [**100**] of the lighting system, the total internal reflection lens [**106**] has a further visible-light source [**154**] including a further plurality of semiconductor light-emitting devices [**156**], [**158**]. The further visible-light source [**154**] in the example [**100**] of the lighting system is configured for generating further visible-light emissions [**160**], [**162**] from the further plurality of semiconductor light-emitting devices [**156**], [**158**]. In the example [**100**] of the lighting system, the further visible-light source [**154**] is located at the central light input interface [**150**] for directing the further visible-light emissions [**160**], [**162**] through the total internal reflection lens [**106**] to the third light output interface [**148**].

As examples, the edge-lit lightguide panel [**102**] may direct the visible-light emissions [**124**], [**126**] for emission from the first light output interface [**116**]; and the another edge-lit lightguide panel [**104**] may direct the additional visible-light emissions [**142**], [**144**] for emission from the second light output interface [**134**]; and the total internal reflection lens [**106**] may direct the further visible-light emissions [**160**], [**162**] for emission from the third light output interface [**148**].

In the example [100] of the lighting system, the first, second and third light output interfaces [116], [134], [148] cooperatively define an emission aperture [164] for forming combined visible-light emissions [166], [168] including the visible-light emissions [124], [126], the additional visible-light emissions [142], [144], and the further visible-light emissions [160], [162]. Further in the example [100] of the lighting system, the emission aperture [164] forms a shielding zone [170] for redirecting some of the combined visible-light emissions [166], [168].

In some examples [100] of the lighting system: the total internal reflection side surface [152] may be extended along the longitudinal axis [108] in addition to being extended along the central light-emission axis [146]; and the central light input interface [150] may be extended along the longitudinal axis [108]; and the further visible-light source [154] may be extended along the longitudinal axis [108]. Further in those examples [100] of the lighting system, the total internal reflection side surface [152] may have a frusto-conical cross-sectional profile in the direction of the line 2-2 being perpendicular to the longitudinal axis [108].

In some examples [100] of the lighting system, the central light input interface [150] of the total internal reflection lens [106] may include a lens cavity [172] formed by a lens face [174] being spaced apart along the central light-emission axis [146] from the further plurality of semiconductor light-emitting devices [156], [158] by a central side wall [176]. As examples [100] of the lighting system, portions of the further visible-light emissions [160], [162] entering into the total internal reflection lens [106] through the central side wall [176] may be refracted towards a normalized direction being orthogonal to a surface of the central side wall [176] and away from the central light-emission axis [146] because the refractive index of the total internal reflection lens [106] may be greater than the refractive index of an ambient atmosphere, e.g. air, filling the lens cavity [172]. Further in those examples [100] of the lighting system, the portions of the further visible-light emissions [160], [162] so entering into the total internal reflection lens [106] through the central side wall [176] may then undergo total internal reflection at the total internal reflection side surface [152], thereby being redirected toward the third light output interface [148].

In further examples [100] of the lighting system, the central light input interface [150] of the total internal reflection lens [106] may include a lens cavity [172] having a different shape (not shown). Further in those examples [100] of the lighting system, the total internal reflection lens [106] may include a lens cavity [172] having an otherwise angled or compound central side wall (not shown). In other examples [100] of the lighting system, the total internal reflection lens [106] may be a fresnel lens (not shown). Suitable fresnel lens structures that may be utilized as being the total internal reflection lens [106] are disclosed, for example, in Parkyn et al., U.S. Pat. No. 5,577,492 issued on Nov. 26, 1996, the entirety of which hereby is incorporated herein by reference.

In some examples [100] of the lighting system, the total internal reflection lens [106] may be a converging total internal reflection lens [106] being configured for causing convergence of the further visible-light emissions [160], [162] in their travel along the central light-emission axis [146] toward the third light output interface [148]. Further in those examples [100] of the lighting system, the total internal reflection lens [106] may be a converging total internal reflection lens [106] being configured for causing convergence of the further visible-light emissions [160], [162] along the central light-emission axis [146] as having a beam angle being within a range of between about thirty degrees (30°) and about ten degrees (10°).

In further examples [100] of the lighting system, the total internal reflection lens [106] may have a spectrum of transmission values of the further visible-light emissions [160], [162] having an average value being at least about ninety percent (90%). In additional examples [100] of the lighting system, the total internal reflection lens [106] may have a spectrum of transmission values of the further visible-light emissions [160], [162] having an average value being at least about ninety-five percent (95%). As some examples [100] of the lighting system, the total internal reflection lens [106] may have a spectrum of absorption values of the further visible-light emissions [160], [162] having an average value being no greater than about ten percent (10%). As further examples [100] of the lighting system, the total internal reflection lens [106] may have a spectrum of absorption values of the further visible-light emissions [160], [162] having an average value being no greater than about five percent (5%).

As additional examples [100] of the lighting system, the total internal reflection lens [106] may have a refractive index of at least about 1.41. In further examples [100] of the lighting system, the total internal reflection lens [106] may be formed of: a silicone composition having a refractive index of about 1.42; or a polymethyl-methacrylate composition having a refractive index of about 1.49; or a polycarbonate composition having a refractive index of about 1.58; or a silicate glass composition having a refractive index of about 1.67.

In some examples [100] of the lighting system, the edge-lit lightguide panel [102] may have a first pair of lateral edges [178], [180] being mutually spaced apart along the longitudinal axis [108]; and the another edge-lit lightguide panel [104] may have a second pair of lateral edges [182], [184] being mutually spaced apart along the longitudinal axis [108]. Further in those examples [100] of the lighting system, each one of the lateral edges [178], [180], [182], [184] may be curvilinear; and the one [112] of the pair of panel surfaces may be concave; and the one [130] of the another pair of panel surfaces may be concave.

In additional examples [100] of the lighting system, the edge-lit lightguide panel [102] may be configured for directing the visible-light emissions [124], [126] in first directions towards the longitudinal axis [108]; and the another edge-lit lightguide panel [104] may be configured for directing the additional visible-light emissions [142], [144] in second directions, being symmetrically opposed to the first directions, towards the longitudinal axis [108]. In those additional examples, the edge-lit lightguide panel [102] may further direct the visible-light emissions [124], [126] for emission from the first light output interface [116]; and the another edge-lit lightguide panel [104] may further direct the additional visible-light emissions [142], [144] for emission from the second light output interface [134]; and the total internal reflection lens [106] may direct the further visible-light emissions [160], [162] for emission from the third light output interface [148].

In some examples [100] of the lighting system, the edge-lit lightguide panel [102] and the another edge-lit lightguide panel [104] may be integrally formed together with the total internal reflection lens [106]. In other examples [100] of the lighting system, the edge-lit lightguide panel [102] may have a central edge represented by a dashed line [186] being extended along the longitudinal axis [108] and being spaced transversely away from the periph-

eral edge [114]; and the another edge-lit lightguide panel [104] may have another central edge represented by a dashed line [188] being extended along the longitudinal axis [108] and being spaced transversely away from the another peripheral edge [132]; and the total internal reflection lens [106] may be located between and attached to the central edge [186] and the another central edge [188].

In examples [100] of the lighting system, the edge-lit lightguide panel [102] may include internal light-dispersing features; and the another edge-lit lightguide panel [104] may include additional internal light-dispersing features. Further in those examples [100] of the lighting system, the internal light-dispersing features may include positive elements such as: particles having various shapes being e.g. spheroidal or polygonal; particles having various material compositions including, e.g., phosphors, quantum dots, and pigmented dots; micro-optical features such as spherical or elliptical lenses, and reflective micro-scale particles. Additionally in those examples [100] of the lighting system, the internal light-dispersing features may include negative elements such as hot-pressed micro-patterns e.g. micro-grooves, lenticular patterns, prisms, fresnels, conical arrays, pyramids, or domes. Also in those examples [100] of the lighting system, the internal light-dispersing features may have a gradually-increasing density in a direction from the peripheral edge [114] towards the longitudinal axis [108]; and the additional internal light-dispersing features may have a gradually-increasing density in another direction from the another peripheral edge [132] towards the longitudinal axis [108].

In examples [100] of the lighting system, the edge-lit lightguide panel [102] may include external light-dispersing features on the one [112] or the another one [110] of the pair of panel surfaces; and the another edge-lit lightguide panel [104] may include additional external light-dispersing features on the one [130] or the another one [128] of the another pair of panel surfaces. Further in those examples [100] of the lighting system, the external light-dispersing features may include positive elements such as: pigmented dots; or micro-optical features such as spherical or elliptical lenses. Also in those examples [100] of the lighting system, the external light-dispersing features may include negative elements such as hot-pressed textured surfaces such as micro-patterns e.g. micro-grooves, lenticular patterns, prisms, fresnels, conical arrays, pyramids, domes, or laser-ablated regions. In addition in those examples [100] of the lighting system, the external light-dispersing features may have a gradually-increasing density in a direction from the peripheral edge [114] towards the longitudinal axis [108]; and the additional external light-dispersing features may have a gradually-increasing density in another direction from the another peripheral edge [132] towards the longitudinal axis [108].

In examples [100] of the lighting system, the another one [110] of the pair of panel surfaces may have a light-reflective layer [202]; and the another one [128] of the another pair of panel surfaces may have another light-reflective layer [204]. Further in those examples [100] of the lighting system, the another one [110] of the pair of panel surfaces may have a specular light-reflective layer [202]; and the another one [128] of the another pair of panel surfaces may have another specular light-reflective layer [204]. Additionally in those examples [100] of the lighting system, the another one [110] of the pair of panel surfaces may have a metallic light-reflective layer [202]; and the another one [128] of the another pair of panel surfaces may have another metallic light-reflective layer [204]. In some of those examples [100] of the lighting system, the metallic light-reflective layers [202], [204] may have a composition that includes: silver, platinum, palladium, aluminum, zinc, gold, iron, copper, tin, antimony, titanium, chromium, nickel, or molybdenum. In additional examples [100] of the lighting system, the another one [110] of the pair of panel surfaces may have a light-reflective layer [202]; and the another one [128] of the another pair of panel surfaces may have another light-reflective layer [204]; and each of the light-reflective layers [202], [204] may have a minimum visible-light reflection value from any incident angle being at least about ninety percent (90%) or being at least about ninety-five percent (95%).

In examples [100] of the lighting system, the plurality of the semiconductor light-emitting devices [120], [122] may include an array of the semiconductor light-emitting devices [120], [122] being mutually spaced apart along the longitudinal axis [108]; and the another plurality of the semiconductor light-emitting devices [138], [140] may include another array of the semiconductor light-emitting devices [138], [140] being mutually spaced apart along the longitudinal axis [108]. Additionally in those examples [100] of the lighting system, the further plurality of the semiconductor light-emitting devices [156], [158] may include a further array of the semiconductor light-emitting devices [156], [158] being mutually spaced apart along the longitudinal axis [108].

In examples [100] of the lighting system, the plurality of the semiconductor light-emitting devices [120], [122] may be collectively configured for generating the visible-light emissions [124], [126] as having a selectable perceived color point; and the another plurality of the semiconductor light-emitting devices [138], [140] may be collectively configured for generating the additional visible-light emissions [142], [144] as having another selectable perceived color point. Additionally in those examples [100] of the lighting system, the further plurality of the semiconductor light-emitting devices [156], [158] may be collectively configured for generating the further visible-light emissions [160], [162] as having a further selectable perceived color point.

In some examples [100] of the lighting system, the plurality of the semiconductor light-emitting devices [120], [122] may include a plurality of clusters of the semiconductor light-emitting devices [120], [122] being co-located together, each one of the plurality of clusters being collectively configured for generating the visible-light emissions [124], [126] as having a selectable perceived color point; and the another plurality of the semiconductor light-emitting devices [138], [140] may include another plurality of clusters of the semiconductor light-emitting devices [138], [140] being co-located together, each one of the another plurality of clusters being collectively configured for generating the additional visible-light emissions [142], [144] as having another selectable perceived color point. Also in that example [100] of the lighting system, the further plurality of the semiconductor light-emitting devices [156], [158] may include a further plurality of clusters of the semiconductor light-emitting devices [156], [158] being co-located together, each one of the further plurality of clusters being collectively configured for generating the further visible-light emissions [160], [162] as having a further selectable perceived color point. As an example [100] of the lighting system, each of the pluralities of clusters of the semiconductor light-emitting devices [120], [122], [138], [140], [156], [158] may include two or three or more co-located semiconductor light-emitting devices being configured for collectively generating the visible-light emissions [124], [126] and the additional visible-light emissions [142], [144]

and the further visible-light emissions [**160**], [**162**] as having the respective selectable perceived color points.

In examples [**100**] of the lighting system, a plurality of semiconductor light-emitting devices [**120**], [**122**], or a plurality of semiconductor light-emitting devices [**138**], [**140**], or a plurality of semiconductor light-emitting devices [**156**], [**158**] may be arranged in a chip-on-board (not shown) array, or in a discrete (not shown) array on a printed circuit board (not shown). Semiconductor light-emitting device arrays including chip-on-board arrays and discrete arrays may be conventionally fabricated by persons of ordinary skill in the art. Further, the semiconductor light-emitting devices [**120**], [**122**], [**138**], [**140**], [**156**], [**158**] of the example [**100**] of the lighting system may be provided with drivers (not shown) and power supplies (not shown) being conventionally fabricated and configured by persons of ordinary skill in the art.

In examples [**100**], the lighting system may be configured for causing emission of a portion of the further visible-light emissions [**160**], [**162**] as being within a field angle of the total internal reflection lens [**106**] and for causing emission of another portion of the further visible-light emissions [**160**], [**162**] as being outside the field angle of the total internal reflection lens [**106**]; and the emission aperture [**164**] may be configured for redirecting some of the another portion of the further visible-light emissions [**160**], [**162**]. Further in those examples [**100**] of the lighting system, the total internal reflection lens [**106**] may, as examples, have a beam angle being within a range of between about thirty degrees (30°) and about ten degrees (10°). Additionally in those examples [**100**] of the lighting system, the total internal reflection lens [**106**] may, as examples have a field angle being within a range of between about sixty degrees (60°) and about twenty degrees (20°).

In examples [**100**] of the lighting system, the emission aperture [**164**] may be positioned for redirecting a part of the another portion of the further visible-light emissions [**160**], [**162**] being emitted at the third light output interface [**148**] in directions deviating from the central light-emission axis [**146**] by greater than about seventy degrees (70°). In further examples [**100**] of the lighting system, the emission aperture [**164**] may be positioned for redirecting a part of the another portion of the further visible-light emissions [**160**], [**162**] being emitted at the third light output interface [**148**] in directions deviating from the central light-emission axis [**146**] by greater than about sixty degrees (60°).

As an example [**100**] of the lighting system, the lateral edges [**178**], [**180**], [**182**], [**184**] of the edge-lit lightguide panels [**102**], [**104**] may be curvilinear; and the one [**112**] of the pair of panel surfaces may be concave; and the one [**130**] of the another pair of panel surfaces may be concave. Further in that example [**100**] of the lighting system, as can be seen in FIG. **2**, the concave panel surfaces [**112**], [**130**] of the emission aperture [**164**] may be positioned for mechanically shielding and thus redirecting some of the further visible-light emissions [**160**], [**162**] being emitted at the third light output interface [**148**] in directions deviating from the central light-emission axis [**146**] by greater than about sixty degrees (60°). Additionally in that example [**100**] of the lighting system, redirection of some of the further visible-light emissions [**160**], [**162**] being emitted at the third light output interface [**148**] in high-angle directions being greater than about sixty degrees (60°) or seventy degrees (70°) may substantially reduce objectionable glare.

In examples [**100**] of the lighting system, the total internal reflection lens [**106**] may have a beam angle being within a range of between about thirty degrees (30°) and about twenty degrees (20°). Further in those examples [**100**] of the lighting system, the total internal reflection lens [**106**] may have a field angle being within a range of between about sixty degrees (60°) and about forty degrees (40°). Additionally in those examples [**100**], the lighting system may be configured for causing emission of a portion of the further visible-light emissions [**160**], [**162**] as being within the field angle of the total internal reflection lens [**106**] and for causing emission of another portion of the further visible-light emissions [**160**], [**162**] as being outside the field angle of the total internal reflection lens [**106**]; and the emission aperture [**164**] may be configured for redirecting some of the another portion of the further visible-light emissions [**160**], [**162**]. Further in those examples [**100**], the emission aperture [**164**] may be positioned for redirecting a part of the another portion of the further visible-light emissions [**160**], [**162**] being emitted at the third light output interface [**148**] in directions deviating from the central light-emission axis [**146**] by greater than about sixty degrees (60°), or deviating from the central light-emission axis by greater than about seventy degrees (70°).

In other examples [**100**] of the lighting system, the total internal reflection lens [**106**] may have a beam angle being within a range of between about twenty degrees (20°) and about ten degrees (10°); or within a range of between about fifteen degrees (15°) and about ten degrees (10°). Further in those examples [**100**] of the lighting system, the total internal reflection lens [**106**] may have a field angle being respectively within a range of between about forty degrees (40°) and about twenty degrees (20°), or within a range of between about thirty degrees (30°) and about twenty degrees (20°). Further in those examples [**100**] of the lighting system, the third light output interface [**148**] may include internal or external light-dispersing features; and the third light output interface [**148**] may cause the total internal reflection lens [**106**] to have an effective field angle being within a range of between about sixty degrees (60°) and about forty degrees (40°). Additionally in those examples [**100**], the lighting system may be configured for causing emission of a portion of the further visible-light emissions [**160**], [**162**] as being within the effective field angle of the total internal reflection lens [**106**] and for causing emission of another portion of the further visible-light emissions [**160**], [**162**] as being outside the effective field angle of the total internal reflection lens [**106**]; and the emission aperture [**164**] may be configured for redirecting some of the another portion of the further visible-light emissions [**160**], [**162**]. Further in those examples [**100**], the emission aperture [**164**] may be positioned for redirecting a part of the another portion of the further visible-light emissions [**160**], [**162**] being emitted at the third light output interface [**148**] in directions deviating from the central light-emission axis [**146**] by greater than about sixty degrees (60°), or deviating from the central light-emission axis by greater than about seventy degrees (70°).

In examples [**100**], the lighting system may include a controller (not shown) for the visible-light source [**118**] and for the another visible-light source [**136**] and for the further visible-light source [**154**], the controller being configured for causing the visible-light emissions [**124**], [**126**] to have a selectable perceived color point and for causing the additional visible-light emissions [**142**], [**144**] to have another selectable perceived color point and for causing the further visible-light emissions [**160**], [**162**] to have a further selectable perceived color point. Further in those examples [**100**] of the lighting system, the controller may be configured for causing the visible-light emissions [**124**], [**126**] to

have a selectable and adjustable intensity and for causing the additional visible-light emissions [**142**], [**144**] to have another selectable and adjustable intensity and for causing the further visible-light emissions [**160**], [**162**] to have a further selectable and adjustable intensity. Additionally in those examples [**100**] of the lighting system, the controller may be configured for causing the combined visible-light emissions [**166**], [**168**] to generate a down-lighting pattern being: wall graze, table with wall fill, wall wash left, wall wash right, double wall wash, wall wash left plus floor, wall wash right plus floor, room, or batwing. Throughout this specification, the term "wall wash" means using vertical, indirect lighting placed at a certain distance and angle from a wall to create a smooth "wash" effect, which may simultaneously hide rough imperfections, eliminate shadows, and uniformly light up a wall.

Throughout this specification, the term "wall graze" means using directional lights placed close to the wall for lighting the wall at a narrow angle, which may draw an observer's eye to the wall's texture by creating shadows that may be either intensified or softened by moving the lights closer to or further from the wall thereby changing the angle.

Also in those examples [**100**] of the lighting system, the controller may be configured for selection among a plurality of different pre-programmed combinations of the intensities for the visible-light emissions [**124**], [**126**], the additional visible-light emissions [**142**], [**144**], and the further visible-light emissions [**160**], [**162**]. Further in those examples [**100**] of the lighting system, the controller may be configured for adjusting, over a selectable time period, the intensities for the visible-light emissions [**124**], [**126**], the additional visible-light emissions [**142**], [**144**], and the further visible-light emissions [**160**], [**162**] from a one of the plurality of pre-programmed combinations to another one of the plurality of pre-programmed combinations. Additionally in those examples [**100**], the lighting system may further include an ambient light sensor (not shown); and the controller may be configured, in response to the ambient light sensor, for adjusting the intensities for the visible-light emissions [**124**], [**126**], the additional visible-light emissions [**142**], [**144**], and the further visible-light emissions [**160**], [**162**].

In other examples [**100**], the lighting system may include a controller (not shown) for the visible-light source [**118**] being configured for causing the visible-light emissions [**124**], [**126**] to have a selectable perceived color point; and may include another controller (not shown) for the another visible-light source [**136**] being configured for causing the additional visible-light emissions [**142**], [**144**] to have another selectable perceived color point; and may include a further controller (not shown) for the further visible-light source [**154**] being configured for causing the further visible-light emissions [**160**], [**162**] to have a further selectable perceived color point. Further in those examples [**100**] of the lighting system, the controller may be configured for causing the visible-light emissions [**124**], [**126**] to have a selectable and adjustable intensity; and the another controller may be configured for causing the additional visible-light emissions [**142**], [**144**] to have another selectable and adjustable intensity; and the further controller may be configured for causing the further visible-light emissions [**160**], [**162**] to have a further selectable and adjustable intensity. In those examples [**100**] of the lighting system, the controller and the another controller and the further controller may be collectively configured for causing the combined visible-light emissions [**166**], [**168**] to generate a down-lighting pattern being: wall graze, table with wall fill, wall wash left, wall wash right, double wall wash, wall wash left plus floor, wall wash right plus floor, room, or batwing. Additionally in those examples [**100**] of the lighting system, the controller and the another controller and the further controller may be collectively configured for selection among a plurality of different pre-programmed combinations of the intensities for the visible-light emissions [**124**], [**126**], the additional visible-light emissions [**142**], [**144**], and the further visible-light emissions [**160**], [**162**]. Further in those examples [**100**] of the lighting system, the controller and the another controller and the further controller may be collectively configured for adjusting, over a selectable time period, the intensities for the visible-light emissions [**124**], [**126**], the additional visible-light emissions [**142**], [**144**], and the further visible-light emissions [**160**], [**162**] from a one of the plurality of pre-programmed combinations to another one of the plurality of pre-programmed combinations. In those examples [**100**], the lighting system may also include an ambient light sensor; and the controller and the another controller and the further controller may be collectively configured, in response to the ambient light sensor, for adjusting the intensities for the visible-light emissions [**124**], [**126**], the additional visible-light emissions [**142**], [**144**], and the further visible-light emissions [**160**], [**162**].

FIG. **5** is a schematic top perspective view showing an example [**500**] of an implementation of a lighting system. FIG. **6** is a schematic cross-sectional view taken along the line **6-6** showing the example [**500**] of the lighting system. FIG. **7** is a schematic cross-sectional view taken along the line **7-7** showing the example [**500**] of the lighting system. FIG. **8** is a schematic bottom perspective view taken along the line **8** showing the example [**500**] of an implementation of a lighting system.

Examples [**100**], [**500**], [**900**], [**1300**], [**1800**], [**2300**], [**2800**], [**3700**], and [**4000**] of lighting systems are discussed herein, respectively, in connection with FIGS. **1-4**; **5-8**; **9-12**; **13-16**; **18-21**; **22-26**; **27-31**; **37-39**; and **40-42**. Examples [**1700**], [**2200**], [**2700**], [**3200**], and [**3300**] of lighting controllers are discussed herein, respectively, in connection with FIGS. **17-21**; **22-26**; **27-31**; **32**, **1-4**; and **33**, **9-12**. Examples [**3400**], [**3500**], [**3600**] of lighting control methods are discussed herein, respectively, in connection with FIGS. **34**, **17-21**; **35**, **22-26**; and **36**, **27-31**. It is understood throughout this specification that a lighting system [**100**], [**500**], [**900**], [**1300**], [**1800**], [**2300**], [**2800**], [**3700**], [**4000**] may include any of the features or combinations of features that are disclosed in connection with any one or more of such lighting systems. It is further understood throughout this specification that each one of the examples [**1700**], [**2200**], [**2700**], [**3200**], [**3300**] of the lighting controllers may be utilized together with a lighting system [**100**], [**500**], [**900**], [**1300**], [**1800**], [**2300**], [**2800**], [**3700**], [**4000**] including any of the features or combinations of features that are disclosed in connection with any one or more of such lighting systems. It is additionally understood throughout this specification that each one of the examples [**3400**], [**3500**], [**3600**] of the lighting control methods may be utilized together with any of the examples [**1700**], [**2200**], [**2700**], [**3200**], [**3300**] of the lighting controllers, for controlling a lighting system [**100**], [**500**], [**900**], [**1300**], [**1800**], [**2300**], [**2800**], [**3700**], [**4000**] including any of the features or combinations of features that are disclosed in connection with any one or more of such lighting systems. Accordingly, FIGS. **1-42** and the entireties of the discussions of the examples [**100**], [**500**], [**900**], [**1300**], [**1800**], [**2300**], [**2800**], [**3700**], [**4000**] of lighting systems and the entireties of the discussions of the examples [**1700**], [**2200**], [**2700**], [**3200**], [**3300**] of the lighting controllers and the entireties

of the discussions of the examples [3400], [3500], [3600] of lighting control methods are hereby incorporated into the following discussion of the example [500] of an implementation of the lighting system.

As shown in FIGS. 5-8, the example [500] of the implementation of the lighting system includes: an edge-lit lightguide panel [502]; another edge-lit lightguide panel [504]; a total internal reflection lens [506]; and an additional total internal reflection lens [507]. In the example [500], the edge-lit lightguide panel [502] is extended along a longitudinal axis [508] of the lighting system. The edge-lit lightguide panel [502] in the example [500] of the lighting system further has a pair of mutually-opposing panel surfaces [510], [512]. The edge-lit lightguide panel [502] in the example [500] of the lighting system also has a peripheral edge [514] being extended along and spaced transversely away from the longitudinal axis [508]. In the example [500] of the lighting system, a one [512] of the pair of panel surfaces includes a first light output interface [516].

The example [500] of the lighting system also includes a visible-light source [518] including a plurality of semiconductor light-emitting devices [520], [522]. In the example [500] of the lighting system, the visible-light source [518] is configured for generating visible-light emissions [524], [526] from the plurality of semiconductor light-emitting devices [520], [522]. Further in the example [500] of the lighting system, the visible-light source [518] is located along the peripheral edge [514] for directing the visible-light emissions [524], [526] into the edge-lit lightguide panel [502].

In the example [500] of the lighting system, the another edge-lit lightguide panel [504] is extended along the longitudinal axis [508]. Additionally in the example [500] of the lighting system, the another edge-lit lightguide panel [504] has another pair of mutually-opposing panel surfaces [528], [530]. In the example [500] of the lighting system, the another edge-lit lightguide panel [504] has another peripheral edge [532] being extended along and spaced transversely away from the longitudinal axis [508]. Further, a one [530] of the another pair of panel surfaces in the example [500] of the lighting system includes a second light output interface [534].

The example [500] of the lighting system additionally includes another visible-light source [536] including another plurality of semiconductor light-emitting devices [538], [540]. In the example [500] of the lighting system, the another visible-light source [536] is configured for generating additional visible-light emissions [542], [544] from the another plurality of semiconductor light-emitting devices [538], [540]. Further in the example [500] of the lighting system, the another visible-light source [536] is located along the another peripheral edge [532] for directing the additional visible-light emissions [542], [544] into the another edge-lit lightguide panel [504].

In the example [500] of the lighting system, the total internal reflection lens [506] has a central light-emission axis [546] being transverse to the longitudinal axis [508]. The total internal reflection lens [506] in the example [500] of the lighting system includes a third light output interface [548] being located between the first and second light output interfaces [516], [534]. In the example [500] of the lighting system, the third light output interface [548] is spaced apart from a central light input interface [550] by a total internal reflection side surface [552]. The total internal reflection side surface [552] in the example [500] of the lighting system is extended along the central light-emission axis [546]. In the example [500] of the lighting system, the total internal reflection lens [506] has a further visible-light source [554] including a further plurality of semiconductor light-emitting devices [556], [558]. The further visible-light source [554] in the example [500] of the lighting system is configured for generating further visible-light emissions [560], [562] from the further plurality of semiconductor light-emitting devices [556], [558]. In the example [500] of the lighting system, the further visible-light source [554] is located at the central light input interface [550] for directing the further visible-light emissions [560], [562] through the total internal reflection lens [506] to the third light output interface [548].

In the example [500] of the lighting system, the additional total internal reflection lens [507] has an additional central light-emission axis [547] being transverse to the longitudinal axis [508]. The additional total internal reflection lens [507] in the example [500] of the lighting system includes a fourth light output interface [549] being spaced apart along the longitudinal axis [508] away from the third light output interface [548] and being located between the first and second light output interfaces [516], [534]. In the example [500] of the lighting system, the fourth light output interface [549] is spaced apart from an additional central light input interface [551] by an additional total internal reflection side surface [553]. The additional total internal reflection side surface [553] in the example [500] of the lighting system is extended along the additional central light-emission axis [547]. In the example [500] of the lighting system, the additional total internal reflection lens [507] has an additional visible-light source [555] including an additional plurality of semiconductor light-emitting devices [557], [559]. The additional visible-light source [555] in the example [500] of the lighting system is configured for generating other visible-light emissions [561], [563] from the additional plurality of semiconductor light-emitting devices [557], [559]. In the example [500] of the lighting system, the additional visible-light source [555] is located at the additional central light input interface [551] for directing the other visible-light emissions [561], [563] through the additional total internal reflection lens [507] to the fourth light output interface [549].

As examples, the edge-lit lightguide panel [502] may direct the visible-light emissions [524], [526] for emission from the first light output interface [516]; and the another edge-lit lightguide panel [504] may direct the additional visible-light emissions [542], [544] for emission from the second light output interface [534]; and the total internal reflection lens [506] may direct the further visible-light emissions [560], [562] for emission from the third light output interface [548]; and the another total internal reflection lens [507] may direct the other visible-light emissions [561], [563] for emission from the fourth light output interface [549].

In the example [500] of the lighting system, the first, second, third and fourth light output interfaces [516], [534], [548], [549] cooperatively define an emission aperture [564] for forming combined visible-light emissions [566], [568] including the visible-light emissions [524], [526], the additional visible-light emissions [542], [544], the further visible-light emissions [560], [562], and the other visible-light emissions [561], [563]. Further in the example [500] of the lighting system, the emission aperture [564] forms a shielding zone [570] for redirecting some of the combined visible-light emissions [566], [568].

In examples [500] of the lighting system, the total internal reflection side surface [552] and the additional total internal reflection side surface [553] each may have a frusto-conical

cross-sectional profile in both of the directions of the lines **6-6** and **7-7** being perpendicular to the longitudinal axis [**508**]. In further examples [**500**] of the lighting system, the additional total internal reflection lens [**507**] may have any combination of the further structural and performance features discussed herein with regard to the total internal reflection lens [**506**]. As additional examples [**500**], the lighting system may include (not shown) further total internal reflection lenses in addition to the total internal reflection lenses [**506**], [**507**]. In examples [**500**] of the lighting system, such further total internal reflection lenses may have any combination of the further structural and performance features discussed herein with regard to the total internal reflection lenses [**506**] and [**507**], and may be mutually spaced apart in the same manner by which the total internal reflection lenses [**506**], [**507**] are spaced apart along the longitudinal axis [**508**].

In some examples [**500**] of the lighting system, the central light input interface [**550**] of the total internal reflection lens [**506**] (and likewise the additional total internal lens [**507**]) may include a lens cavity [**572**] formed by a lens face [**574**] being spaced apart along the central light-emission axis [**546**] from the further plurality of semiconductor light-emitting devices [**556**], [**558**] by a central side wall [**576**]. As examples [**500**] of the lighting system, portions of the further visible-light emissions [**560**], [**562**] entering into the total internal reflection lens [**506**] through the central side wall [**576**] may be refracted towards a normalized direction being orthogonal to a surface of the central side wall [**576**] and away from the central light-emission axis [**546**] because the refractive index of the total internal reflection lens [**506**] may be greater than the refractive index of an ambient atmosphere, e.g. air, filling the lens cavity [**572**]. Further in those examples [**500**] of the lighting system, the portions of the further visible-light emissions [**560**], [**562**] so entering into the total internal reflection lens [**506**] through the central side wall [**576**] may then undergo total internal reflection at the total internal reflection side surface [**552**], thereby being redirected toward the third light output interface [**548**].

In further examples [**500**] of the lighting system, the central light input interface [**550**] of the total internal reflection lens [**506**] (and likewise the additional total internal lens [**507**]) may include a lens cavity [**572**] having a different shape (not shown). Further in those examples [**500**] of the lighting system, the total internal reflection lens [**506**] may include a lens cavity [**572**] having an otherwise angled or compound central side wall (not shown). In other examples [**500**] of the lighting system, the total internal reflection lens [**506**] may be a fresnel lens (not shown). Suitable fresnel lens structures that may be utilized as being the total internal reflection lens [**506**] are disclosed, for example, in Parkyn et al., U.S. Pat. No. 5,577,492 issued on Nov. 26, 1996, the entirety of which hereby is incorporated herein by reference.

In some examples [**500**] of the lighting system, the total internal reflection lens [**506**] (and likewise the additional total internal lens [**507**]) may be a converging total internal reflection lens [**506**] being configured for causing convergence of the further visible-light emissions [**560**], [**562**] in their travel along the central light-emission axis [**546**] toward the third light output interface [**548**]. Further in those examples [**500**] of the lighting system, the total internal reflection lens [**506**] may be a converging total internal reflection lens [**506**] being configured for causing convergence of the further visible-light emissions [**560**], [**562**] along the central light-emission axis [**546**] as having a beam angle being within a range of between about thirty degrees (30°) and about ten degrees (10°).

In further examples [**500**] of the lighting system, the total internal reflection lens [**506**] (and likewise the additional total internal lens [**507**]) may have a spectrum of transmission values of the further visible-light emissions [**560**], [**562**] having an average value being at least about ninety percent (90%). In additional examples [**500**] of the lighting system, the total internal reflection lens [**506**] may have a spectrum of transmission values of the further visible-light emissions [**560**], [**562**] having an average value being at least about ninety-five percent (95%). As some examples [**500**] of the lighting system, the total internal reflection lens [**506**] may have a spectrum of absorption values of the further visible-light emissions [**560**], [**562**] having an average value being no greater than about ten percent (10%). As further examples [**500**] of the lighting system, the total internal reflection lens [**506**] may have a spectrum of absorption values of the further visible-light emissions [**560**], [**562**] having an average value being no greater than about five percent (5%).

As additional examples [**500**] of the lighting system, the total internal reflection lens [**506**](and likewise the additional total internal lens [**507**]) may have a refractive index of at least about 1.41. In further examples [**500**] of the lighting system, the total internal reflection lens [**506**] may be formed of: a silicone composition having a refractive index of about 1.42; or a polymethyl-methacrylate composition having a refractive index of about 1.49; or a polycarbonate composition having a refractive index of about 1.58; or a silicate glass composition having a refractive index of about 1.67.

In some examples [**500**] of the lighting system, the edge-lit lightguide panel [**502**] may have a first pair of lateral edges [**578**], [**580**] being mutually spaced apart along the longitudinal axis [**508**]; and the another edge-lit lightguide panel [**504**] may have a second pair of lateral edges [**582**], [**584**] being mutually spaced apart along the longitudinal axis [**508**]. Further in those examples [**500**] of the lighting system, each one of the lateral edges [**578**], [**580**], [**582**], [**584**] may be linear; and the one [**512**] of the pair of panel surfaces may be generally flat; and the one [**530**] of the another pair of panel surfaces may be generally flat.

In additional examples [**500**] of the lighting system, the edge-lit lightguide panel [**502**] may be configured for directing the visible-light emissions [**524**], [**526**] in first directions towards the longitudinal axis [**508**]; and the another edge-lit lightguide panel [**504**] may be configured for directing the additional visible-light emissions [**542**], [**544**] in second directions, being symmetrically opposed to the first directions, towards the longitudinal axis [**508**]. In those additional examples, the edge-lit lightguide panel [**502**] may further direct the visible-light emissions [**524**], [**526**] for emission from the first light output interface [**516**]; and the another edge-lit lightguide panel [**504**] may further direct the additional visible-light emissions [**542**], [**544**] for emission from the second light output interface [**534**]; and the total internal reflection lens [**506**] may direct the further visible-light emissions [**560**], [**562**] for emission from the third light output interface [**548**]; and the additional total internal reflection lens [**507**] may direct the other visible-light emissions [**561**], [**563**] for emission from the fourth light output interface [**549**].

In some examples [**500**] of the lighting system, the edge-lit lightguide panel [**502**] and the another edge-lit lightguide panel [**504**] may be integrally formed together with the total internal reflection lenses [**506**], [**507**]. In other examples [**500**] of the lighting system, the edge-lit light-

guide panel [502] may have a central edge represented by a dashed line [586] being extended along the longitudinal axis [508] and being spaced transversely away from the peripheral edge [514]; and the another edge-lit lightguide panel [504] may have another central edge represented by a dashed line [588] being extended along the longitudinal axis [508] and being spaced transversely away from the another peripheral edge [532]; and the total internal reflection lenses [506], [507] may be located between and attached to the central edge [586] and the another central edge [588].

In examples [500] of the lighting system, the edge-lit lightguide panel [502] may include internal light-dispersing features; and the another edge-lit lightguide panel [504] may include additional internal light-dispersing features. Further in those examples [500] of the lighting system, the internal light-dispersing features may include positive elements such as: particles having various shapes being e.g. spheroidal or polygonal; particles having various material compositions including, e.g., phosphors, quantum dots, and pigmented dots; micro-optical features such as spherical or elliptical lenses, and reflective micro-scale particles. Additionally in those examples [500] of the lighting system, the internal light-dispersing features may include negative elements such as: hot-pressed micro-patterns e.g. micro-grooves, lenticular patterns, prisms, fresnels, conical arrays, pyramids, or domes. Also in those examples [500] of the lighting system, the internal light-dispersing features may have a gradually-increasing density in a direction from the peripheral edge [514] towards the longitudinal axis [508]; and the additional internal light-dispersing features may have a gradually-increasing density in another direction from the another peripheral edge [532] towards the longitudinal axis [508].

In examples [500] of the lighting system, the edge-lit lightguide panel [502] may include external light-dispersing features on the one [512] or the another one [510] of the pair of panel surfaces; and the another edge-lit lightguide panel [504] may include additional external light-dispersing features on the one [530] or the another one [528] of the another pair of panel surfaces. Further in those examples [500] of the lighting system, the external light-dispersing features may include positive elements such as: pigmented dots; or micro-optical features such as spherical or elliptical lenses. Also in those examples [500] of the lighting system, the external light-dispersing features may include negative elements such as hot-pressed textured surfaces such as micro-patterns e.g. micro-grooves, lenticular patterns, prisms, fresnels, conical arrays, pyramids, domes, or laser-ablated regions. In addition in those examples [500] of the lighting system, the external light-dispersing features may have a gradually-increasing density in a direction from the peripheral edge [514] towards the longitudinal axis [508]; and the additional external light-dispersing features may have a gradually-increasing density in another direction from the another peripheral edge [532] towards the longitudinal axis [508].

In examples [500] of the lighting system, the another one [510] of the pair of panel surfaces may have a light-reflective layer [602]; and the another one [528] of the another pair of panel surfaces may have another light-reflective layer [604]. Further in those examples [500] of the lighting system, the another one [510] of the pair of panel surfaces may have a specular light-reflective layer [602]; and the another one [528] of the another pair of panel surfaces may have another specular light-reflective layer [604]. Additionally in those examples [500] of the lighting system, the another one [510] of the pair of panel surfaces may have a metallic light-reflective layer [602]; and the another one [528] of the another pair of panel surfaces may have another metallic light-reflective layer [604]. In some of those examples [500] of the lighting system, the metallic light-reflective layers [602], [604]may have a composition that includes: silver, platinum, palladium, aluminum, zinc, gold, iron, copper, tin, antimony, titanium, chromium, nickel, or molybdenum. In additional examples [500] of the lighting system, the another one [510] of the pair of panel surfaces may have a light-reflective layer [602]; and the another one [528] of the another pair of panel surfaces may have another light-reflective layer [604]; and each of the light-reflective layers [602], [604] may have a minimum visible-light reflection value from any incident angle being at least about ninety percent (90%) or being at least about ninety-five percent (95%).

In examples [500] of the lighting system, the plurality of the semiconductor light-emitting devices [520], [522] may include an array of the semiconductor light-emitting devices [520], [522] being mutually spaced apart along the longitudinal axis [508]; and the another plurality of the semiconductor light-emitting devices [538], [540] may include another array of the semiconductor light-emitting devices [538], [540] being mutually spaced apart along the longitudinal axis [508]. Additionally in those examples [500] of the lighting system, the further plurality of the semiconductor light-emitting devices [556], [558] may include a further array of the semiconductor light-emitting devices [556], [558] being mutually spaced apart along the longitudinal axis [508].

In examples [500] of the lighting system, the plurality of the semiconductor light-emitting devices [520], [522] may be collectively configured for generating the visible-light emissions [524], [526] as having a selectable perceived color point; and the another plurality of the semiconductor light-emitting devices [538], [540] may be collectively configured for generating the additional visible-light emissions [542], [544] as having another selectable perceived color point. Additionally in those examples [500] of the lighting system, the further plurality of the semiconductor light-emitting devices [556], [558] may be collectively configured for generating the further visible-light emissions [560], [562] and the other visible-light emissions [561], [563] as respectively having a further selectable perceived color point and another selectable perceived color point.

In some examples [500] of the lighting system, the plurality of the semiconductor light-emitting devices [520], [522] may include a plurality of clusters of the semiconductor light-emitting devices [520], [522] being co-located together, each one of the plurality of clusters being collectively configured for generating the visible-light emissions [524], [526] as having a selectable perceived color point; and the another plurality of the semiconductor light-emitting devices [538], [540] may include another plurality of clusters of the semiconductor light-emitting devices [538], [540] being co-located together, each one of the another plurality of clusters being collectively configured for generating the additional visible-light emissions [542], [544] as having another selectable perceived color point. Also in that example [500] of the lighting system, the further plurality of the semiconductor light-emitting devices [556], [558] may include a further plurality of clusters of the semiconductor light-emitting devices [556], [558] being co-located together, each one of the further plurality of clusters being collectively configured for generating the further visible-light emissions [560], [562] as having a further selectable perceived color point. Further in that example [500] of the lighting system, the additional plurality of the semiconduc-

tor light-emitting devices [557], [559] may include an additional plurality of clusters of the semiconductor light-emitting devices [557], [559] being co-located together, each one of the additional plurality of clusters being collectively configured for generating the other visible-light emissions [561], [563] as having another selectable perceived color point.

As an example [500] of the lighting system, each of the pluralities of clusters of the semiconductor light-emitting devices [520], [522], [538], [540], [556], [558], [557], [559] may include two or three or more co-located semiconductor light-emitting devices being configured for collectively generating the visible-light emissions [524], [526] and the additional visible-light emissions [542], [544] and the further visible-light emissions [560], [562] and the other visible-light emissions [561], [563] as having the respective selectable perceived color points.

In examples [500] of the lighting system, a plurality of semiconductor light-emitting devices [520], [522], or a plurality of semiconductor light-emitting devices [538], [540], or a plurality of semiconductor light-emitting devices [556], [558], or a plurality of semiconductor light-emitting devices [557], [559] may be arranged in a chip-on-board (not shown) array, or in a discrete (not shown) array on a printed circuit board (not shown). Semiconductor light-emitting device arrays including chip-on-board arrays and discrete arrays may be conventionally fabricated by persons of ordinary skill in the art. Further, the semiconductor light-emitting devices [520], [522], [538], [540], [556], [558], [557], [559] of the example [500] of the lighting system may be provided with drivers (not shown) and power supplies (not shown) being conventionally fabricated and configured by persons of ordinary skill in the art.

In examples [500], the lighting system may be configured for causing emission of a portion of the further visible-light emissions [560], [562], (or in an analogous manner, a portion of the other visible-light emissions of the additional total internal reflection lens [507]), as being within a field angle of the total internal reflection lens [506] and for causing emission of another portion of the further visible-light emissions [560], [562] as being outside the field angle of the total internal reflection lens [506]; and the emission aperture [564] may be configured for redirecting some of the another portion of the further visible-light emissions [560], [562]. Further in those examples [500] of the lighting system, the total internal reflection lens [506] may, as examples, have a beam angle being within a range of between about thirty degrees (30°) and about ten degrees (10°). Additionally in those examples [500] of the lighting system, the total internal reflection lens [506] may, as examples have a field angle being within a range of between about sixty degrees (60°) and about twenty degrees (20°).

In examples [500] of the lighting system, the emission aperture [564] may be positioned for redirecting a part of the another portion of the further visible-light emissions [560], [562] (or likewise of the other visible-light emissions [561], [563]) being emitted at the third light output interface [548] in directions deviating from the central light-emission axis [546] by greater than about seventy degrees (70°). In further examples [500] of the lighting system, the emission aperture [564] may be positioned for redirecting a part of the another portion of the further visible-light emissions [560], [562] being emitted at the third light output interface [548] in directions deviating from the central light-emission axis [546] by greater than about sixty degrees (60°).

As an example [500] of the lighting system, the lateral edges [578], [580], [582], [584] of the edge-lit lightguide panels [502], [504] may be linear; and the one [512] of the pair of panel surfaces may be generally flat; and the one [530] of the another pair of panel surfaces may be generally flat. Further in that example [500] of the lighting system, as can be seen in FIG. 6, the flat panel surfaces [512], [530] of the emission aperture [564] may be cooperatively positioned for mechanically shielding and thus redirecting some of the further visible-light emissions [560], [562] and some of the other visible-light emissions [561], [563] being respectively emitted at the third light output interface [548] and at the fourth light output interface [549] in directions deviating from the central light-emission axis [546] by greater than about sixty degrees (60°). Additionally in that example [500] of the lighting system, redirection of the further visible-light emissions [560], [562] being emitted at the third light output interface [548] and of the other visible-light emissions [561], [563] being emitted at the fourth light output interface [549] in high-angle directions being greater than about sixty degrees (60°) or seventy degrees (70°) may substantially reduce objectionable glare.

In examples [500] of the lighting system, the total internal reflection lens [506] (and likewise the additional total internal lens [507]) may have a beam angle being within a range of between about thirty degrees (30°) and about twenty degrees (20°). Further in those examples [500] of the lighting system, the total internal reflection lens [506] may have a field angle being within a range of between about sixty degrees (60°) and about forty degrees (40°). Additionally in those examples [500], the lighting system may be configured for causing emission of a portion of the further visible-light emissions [560], [562] as being within the field angle of the total internal reflection lens [506] and for causing emission of another portion of the further visible-light emissions [560], [562] as being outside the field angle of the total internal reflection lens [506]; and the emission aperture [564] may be configured for redirecting some of the another portion of the further visible-light emissions [560], [562]. Further in those examples [500], the emission aperture [564] may be positioned for redirecting a part of the another portion of the further visible-light emissions [560], [562] being emitted at the third light output interface [548] in directions deviating from the central light-emission axis [546] by greater than about sixty degrees (60°), or deviating from the central light-emission axis by greater than about seventy degrees (70°).

In other examples [500] of the lighting system, the total internal reflection lens [506] (and likewise the additional total internal lens [507]) may have a beam angle being within a range of between about twenty degrees (20°) and about ten degrees (10°); or within a range of between about fifteen degrees (15°) and about ten degrees (10°). Further in those examples [500] of the lighting system, the total internal reflection lens [506] may have a field angle being respectively within a range of between about forty degrees (40°) and about twenty degrees (20°), or within a range of between about thirty degrees (30°) and about twenty degrees (20°). Further in those examples [500] of the lighting system, the third light output interface [548] may include internal or external light-dispersing features; and the third light output interface [548] may cause the total internal reflection lens [506] to have an effective field angle being within a range of between about sixty degrees (60°) and about forty degrees (40°). Additionally in those examples [500], the lighting system may be configured for causing emission of a portion of the further visible-light emissions [560], [562] as being within the effective field angle of the total internal reflection lens [506] and for causing emission

of another portion of the further visible-light emissions [560], [562] as being outside the effective field angle of the total internal reflection lens [506]; and the emission aperture [564] may be configured for redirecting some of the another portion of the further visible-light emissions [560], [562]. Further in those examples [500], the emission aperture [564] may be positioned for redirecting a part of the another portion of the further visible-light emissions [560], [562] (or likewise the other visible-light emissions [561], [563]) being emitted at the third light output interface [548] in directions deviating from the central light-emission axis [546] by greater than about sixty degrees (60°), or deviating from the central light-emission axis by greater than about seventy degrees (70°).

In examples [500], the lighting system may include a controller (not shown) for the visible-light source [518] and for the another visible-light source [536] and for the further visible-light source [554] and for the additional visible-light source [555], the controller being configured for causing the visible-light emissions [524], [526] to have a selectable perceived color point and for causing the additional visible-light emissions [542], [544] to have another selectable perceived color point and for causing the further visible-light emissions [560], [562] to have a further selectable perceived color point and for causing the other visible-light emissions [561], [563] to have an additional selectable perceived color point. Further in those examples [500] of the lighting system, the controller may be configured for causing the visible-light emissions [524], [526] to have a selectable and adjustable intensity and for causing the additional visible-light emissions [542], [544] to have another selectable and adjustable intensity and for causing the further visible-light emissions [560], [562] to have a further selectable and adjustable intensity and for causing the other visible-light emissions [561], [563] to have an additional selectable and adjustable intensity. Additionally in those examples [500] of the lighting system, the controller may be configured for causing the combined visible-light emissions [566], [568] to generate a down-lighting pattern being: wall graze, table with wall fill, wall wash left, wall wash right, double wall wash, wall wash left plus floor, wall wash right plus floor, room, or batwing. Also in those examples [500] of the lighting system, the controller may be configured for selection among a plurality of different pre-programmed combinations of the intensities for the visible-light emissions [524], [526], the additional visible-light emissions [542], [544], the further visible-light emissions [560], [562] and the other visible-light emissions [561], [563]. Further in those examples [500] of the lighting system, the controller may be configured for adjusting, over a selectable time period, the intensities for the visible-light emissions [524], [526], the additional visible-light emissions [542], [544], the further visible-light emissions [560], [562] and the other visible-light emissions [561], [563] from a one of the plurality of pre-programmed combinations to another one of the plurality of pre-programmed combinations. Additionally in those examples [500], the lighting system may further include an ambient light sensor (not shown); and the controller may be configured, in response to the ambient light sensor, for adjusting the intensities for the visible-light emissions [524], [526], the additional visible-light emissions [542], [544], the further visible-light emissions [560], [562], and the other visible-light emissions [561], [563].

In other examples [500], the lighting system may include a controller (not shown) for the visible-light source [518] being configured for causing the visible-light emissions [524], [526] to have a selectable perceived color point; and may include another controller (not shown) for the another visible-light source [536] being configured for causing the additional visible-light emissions [542], [544] to have another selectable perceived color point; and may include a further controller (not shown) for the further visible-light source [554] being configured for causing the further visible-light emissions [560], [562] to have a further selectable perceived color point; and may include an additional controller (not shown) for the additional visible-light source [555] being configured for causing the other visible-light emissions [561], [563] to have an additional selectable perceived color point. Further in those examples [500] of the lighting system, the controller may be configured for causing the visible-light emissions [524], [526] to have a selectable and adjustable intensity; and the another controller may be configured for causing the additional visible-light emissions [542], [544] to have another selectable and adjustable intensity; and the further controller may be configured for causing the further visible-light emissions [560], [562] to have a further selectable and adjustable intensity; and the additional controller may be configured for causing the other visible-light emissions [561], [563] to have an additional selectable and adjustable intensity. In those examples [500] of the lighting system, the controller and the another controller and the further controller and the additional controller may be collectively configured for causing the combined visible-light emissions [566], [568] to generate a down-lighting pattern being: wall graze, table with wall fill, wall wash left, wall wash right, double wall wash, wall wash left plus floor, wall wash right plus floor, room, or batwing. Additionally in those examples [500] of the lighting system, the controller and the another controller and the further controller and the additional controller may be collectively configured for selection among a plurality of different pre-programmed combinations of the intensities for the visible-light emissions [524], [526], the additional visible-light emissions [542], [544], the further visible-light emissions [560], [562]; and the other visible-light emissions [561], [563]. Further in those examples [500] of the lighting system, the controller and the another controller and the further controller and the additional controller may be collectively configured for adjusting, over a selectable time period, the intensities for the visible-light emissions [524], [526], the additional visible-light emissions [542], [544], the further visible-light emissions [560], [562], and the other visible-light emissions [561], [563], from a one of the plurality of pre-programmed combinations to another one of the plurality of pre-programmed combinations. In those examples [500], the lighting system may also include an ambient light sensor; and the controller and the another controller and the further controller and the additional controller may be collectively configured, in response to the ambient light sensor, for adjusting the intensities for the visible-light emissions [524], [526], the additional visible-light emissions [542], [544], and the further visible-light emissions [560], [562], and the other visible-light emissions [561], [563].

FIG. **9** is a schematic top perspective view showing an example [900] of an implementation of a lighting system. FIG. **10** is a schematic cross-sectional view taken along the line **10-10** showing the example [900] of the lighting system. FIG. **11** is a schematic cross-sectional view taken along the line **11-11** showing the example [900] of the lighting system. FIG. **12** is a schematic bottom perspective view taken along the line **12** showing the example [900] of an implementation of a lighting system.

Examples [100], [500], [900], [1300], [1800], [2300], [2800], [3700], and [4000] of lighting systems are discussed herein, respectively, in connection with FIGS. **1-4**; **5-8**; **9-12**; **13-16**; **18-21**; **22-26**; **27-31**; **37-39**; and **40-42**. Examples [1700], [2200], [2700], [3200], and [3300] of lighting controllers are discussed herein, respectively, in connection with FIGS. **17-21**; **22-26**; **27-31**; **32**, **1-4**; and **33**, **9-12**. Examples [3400], [3500], [3600] of lighting control methods are discussed herein, respectively, in connection with FIGS. **34**, **17-21**; **35**, **22-26**; and **36**, **27-31**. It is understood throughout this specification that a lighting system [100], [500], [900], [1300], [1800], [2300], [2800], [3700], [4000] may include any of the features or combinations of features that are disclosed in connection with any one or more of such lighting systems. It is further understood throughout this specification that each one of the examples [1700], [2200], [2700], [3200], [3300] of the lighting controllers may be utilized together with a lighting system [100], [500], [900], [1300], [1800], [2300], [2800], [3700], [4000] including any of the features or combinations of features that are disclosed in connection with any one or more of such lighting systems. It is additionally understood throughout this specification that each one of the examples [3400], [3500], [3600] of the lighting control methods may be utilized together with any of the examples [1700], [2200], [2700], [3200], [3300] of the lighting controllers, for controlling a lighting system [100], [500], [900], [1300], [1800], [2300], [2800], [3700], [4000] including any of the features or combinations of features that are disclosed in connection with any one or more of such lighting systems. Accordingly, FIGS. **1-42** and the entireties of the discussions of the examples [100], [500], [900], [1300], [1800], [2300], [2800], [3700], and [4000] of lighting systems and the entireties of the discussions of the examples [1700], [2200], [2700], [3200], [3300] of the lighting controllers and the entireties of the discussions of the examples [3400], [3500], [3600] of lighting control methods are hereby incorporated into the following discussion of the example [900] of an implementation of the lighting system.

As shown in FIGS. **9-12**, the example [900] of the implementation of the lighting system includes: an edge-lit lightguide panel [902]; another edge-lit lightguide panel [904]; and a bowl reflector [906]. In the example [900], the edge-lit lightguide panel [902] is extended along a longitudinal axis [908] of the lighting system. The edge-lit lightguide panel [902] in the example [900] of the lighting system further has a pair of mutually-opposing panel surfaces [910], [912]. The edge-lit lightguide panel [902] in the example [900] of the lighting system also has a peripheral edge [914] being extended along and spaced transversely away from the longitudinal axis [908]. In the example [900] of the lighting system, a one [912] of the pair of panel surfaces includes a first light output interface [916].

The example [900] of the lighting system also includes a visible-light source [918] including a plurality of semiconductor light-emitting devices [920], [922]. In the example [900] of the lighting system, the visible-light source [918] is configured for generating visible-light emissions [924], [926] from the plurality of semiconductor light-emitting devices [920], [922]. Further in the example [900] of the lighting system, the visible-light source [918] is located along the peripheral edge [914] for directing the visible-light emissions [924], [926] into the edge-lit lightguide panel [902].

In the example [900] of the lighting system, the another edge-lit lightguide panel [904] is extended along the longitudinal axis [908]. Additionally in the example [900] of the lighting system, the another edge-lit lightguide panel [904] has another pair of mutually-opposing panel surfaces [928], [930]. In the example [900] of the lighting system, the another edge-lit lightguide panel [904] has another peripheral edge [932] being extended along and spaced transversely away from the longitudinal axis [908]. Further, a one [930] of the another pair of panel surfaces in the example [900] of the lighting system includes a second light output interface [934].

The example [900] of the lighting system additionally includes another visible-light source [936] including another plurality of semiconductor light-emitting devices [938], [940]. In the example [900] of the lighting system, the another visible-light source [936] is configured for generating additional visible-light emissions [942], [944] from the another plurality of semiconductor light-emitting devices [938], [940]. Further in the example [900] of the lighting system, the another visible-light source [936] is located along the another peripheral edge [932] for directing the additional visible-light emissions [942], [944] into the another edge-lit lightguide panel [904].

In the example [900] of the lighting system, the bowl reflector [906] has a central light-emission axis [946] being transverse to the longitudinal axis [908]. The bowl reflector [906] in the example [900] of the lighting system includes a third light output interface [948] being located between the first and second light output interfaces [916], [934]. In the example [900] of the lighting system, the third light output interface [948] is spaced apart from a central light input interface [950] by a visible-light-reflective side surface [952]. The visible-light-reflective side surface [952] in the example [900] of the lighting system is extended along the central light-emission axis [946] and defines a portion of a cavity [947]. In the example [900] of the lighting system, the bowl reflector [906] has a further visible-light source [954] including a further plurality of semiconductor light-emitting devices [956], [958]. The further visible-light source [954] in the example [900] of the lighting system is configured for generating further visible-light emissions [960], [962] from the further plurality of semiconductor light-emitting devices [956], [958]. In the example [900] of the lighting system, the further visible-light source [954] is located at the central light input interface [950] for directing the further visible-light emissions [960], [962] through the cavity [947] of the bowl reflector [906] to the third light output interface [948].

As examples, the edge-lit lightguide panel [902] may direct the visible-light emissions [924], [926] for emission from the first light output interface [916]; and the another edge-lit lightguide panel [904] may direct the additional visible-light emissions [942], [944] for emission from the second light output interface [934]; and the bowl reflector [906] may direct the further visible-light emissions [960], [962] for emission from the third light output interface [948].

In the example [900] of the lighting system, the first, second and third light output interfaces [916], [934], [948] cooperatively define an emission aperture [964] for forming combined visible-light emissions [966], [968] including the visible-light emissions [924], [926], the additional visible-light emissions [942], [944], and the further visible-light emissions [960], [962]. Further in the example [900] of the lighting system, the emission aperture [964] forms a shielding zone [970] for redirecting some of the combined visible-light emissions [966], [968].

In some examples [900] of the lighting system: the visible-light-reflective side surface [952] may be extended along the longitudinal axis [908] in addition to being

extended along the central light-emission axis [**946**]; and the central light input interface [**950**] may be extended along the longitudinal axis [**908**]; and the further visible-light source [**954**] may be extended along the longitudinal axis [**908**]. Further in those examples [**900**] of the lighting system, the visible-light-reflective side surface [**952**] may have a frusto-conical cross-sectional profile in the direction of the line **10-10** being perpendicular to the longitudinal axis [**908**].

In some examples [**900**] of the lighting system, the bowl reflector [**906**] may be a converging bowl reflector [**906**] being configured for causing convergence of the further visible-light emissions [**960**], [**962**] in their travel along the central light-emission axis [**946**] toward the third light output interface [**948**]. Further in those examples [**900**] of the lighting system, the bowl reflector [**906**] may be a converging bowl reflector [**906**] being configured for causing convergence of the further visible-light emissions [**960**], [**962**] along the central light-emission axis [**946**] as having a beam angle being within a range of between about thirty degrees (30°) and about ten degrees (10°).

As additional examples [**900**] of the lighting system, the visible-light-reflective side surface [**952**] of the bowl reflector [**906**] may be a specular light-reflective surface. In further examples [**900**] of the lighting system, the visible-light-reflective side surface [**952**] of the bowl reflector [**906**] may be a metallic light-reflective surface. In some of those examples [**900**] of the lighting system, the metallic layer of the visible-light-reflective side surface [**952**] may have a composition that includes: silver, platinum, palladium, aluminum, zinc, gold, iron, copper, tin, antimony, titanium, chromium, nickel, or molybdenum.

In examples [**900**] of the lighting system, the visible-light-reflective side surface [**952**] of the bowl reflector [**906**] may have a minimum visible-light reflection value from any incident angle being: at least about ninety percent (90%); or at least about ninety-five percent (95%). As further examples [**900**] of the lighting system, the visible-light-reflective side surface [**952**] of the bowl reflector [**906**] may have a maximum visible-light transmission value from any incident angle being: no greater than about ten percent (10%); or no greater than about five percent (5%).

In examples [**900**] of the lighting system, the visible-light-reflective side surface [**952**] of the bowl reflector [**906**] may be configured for reflecting the further visible-light emissions [**960**], [**962**] toward a horizon [**963**] of the bowl reflector [**906**] as having a beam angle being within a range of between about ten degrees (10°) and about thirty degrees (30°).

As further examples [**900**] of the lighting system, the visible-light-reflective side surface [**952**] of the bowl reflector [**906**] may be configured for reflecting the further visible-light emissions [**960**], [**962**] toward the horizon [**963**] of the bowl reflector [**906**] as having a field angle being within a range of between about twenty degrees (20°) and about sixty degrees (60°).

In examples [**900**] of the lighting system, a portion of the visible-light-reflective side surface [**952**] of the bowl reflector [**906**] may be a parabolic surface. In further examples [**900**] of the lighting system, a portion of the visible-light-reflective side surface [**952**] of the bowl reflector [**906**] may be a part of an elliptic paraboloid or a part of a paraboloid of revolution. As further examples [**900**] of the lighting system, a portion of the visible-light-reflective side surface [**952**] of the bowl reflector [**906**] may be a multi-segmented parabolic surface.

In some examples [**900**] of the lighting system, the edge-lit lightguide panel [**902**] may have a first pair of lateral edges [**978**], [**980**] being mutually spaced apart along the longitudinal axis [**908**]; and the another edge-lit lightguide panel [**904**] may have a second pair of lateral edges [**982**], [**984**] being mutually spaced apart along the longitudinal axis [**908**]. Further in those examples [**900**] of the lighting system, each one of the lateral edges [**978**], [**980**], [**982**], [**984**] may be curvilinear; and the one [**912**] of the pair of panel surfaces may be concave; and the one [**930**] of the another pair of panel surfaces may be concave.

In additional examples [**900**] of the lighting system, the edge-lit lightguide panel [**902**] may be configured for directing the visible-light emissions [**924**], [**926**] in first directions towards the longitudinal axis [**908**]; and the another edge-lit lightguide panel [**904**] may be configured for directing the additional visible-light emissions [**942**], [**944**] in second directions, being symmetrically opposed to the first directions, towards the longitudinal axis [**908**]. In those additional examples, the edge-lit lightguide panel [**902**] may further direct the visible-light emissions [**924**], [**926**] for emission from the first light output interface [**916**]; and the another edge-lit lightguide panel [**904**] may further direct the additional visible-light emissions [**942**], [**944**] for emission from the second light output interface [**934**]; and the bowl reflector [**906**] may direct the further visible-light emissions [**960**], [**962**] for emission from the third light output interface [**948**].

In some examples [**900**] of the lighting system, the edge-lit lightguide panel [**902**] and the another edge-lit lightguide panel [**904**] may be integrally formed together with the bowl reflector [**906**]. In other examples [**900**] of the lighting system, the edge-lit lightguide panel [**902**] may have a central edge represented by a dashed line [**986**] being extended along the longitudinal axis [**908**] and being spaced transversely away from the peripheral edge [**914**]; and the another edge-lit lightguide panel [**904**] may have another central edge represented by a dashed line [**988**] being extended along the longitudinal axis [**908**] and being spaced transversely away from the another peripheral edge [**932**]; and the bowl reflector [**906**] may be located between and attached to the central edge [**986**] and the another central edge [**988**].

In examples [**900**] of the lighting system, the edge-lit lightguide panel [**902**] may include internal light-dispersing features; and the another edge-lit lightguide panel [**904**] may include additional internal light-dispersing features. Further in those examples [**900**] of the lighting system, the internal light-dispersing features may include positive elements such as: particles having various shapes being e.g. spheroidal or polygonal; particles having various material compositions including, e.g., phosphors, quantum dots, and pigmented dots; micro-optical features such as spherical or elliptical lenses, and reflective micro-scale particles. Additionally in those examples [**900**] of the lighting system, the internal light-dispersing features may include negative elements such as: hot-pressed micro-patterns e.g. micro-grooves, lenticular patterns, prisms, fresnels, conical arrays, pyramids, or domes. Also in those examples [**900**] of the lighting system, the internal light-dispersing features may have a gradually-increasing density in a direction from the peripheral edge [**914**] towards the longitudinal axis [**908**]; and the additional internal light-dispersing features may have a gradually-increasing density in another direction from the another peripheral edge [**932**] towards the longitudinal axis [**908**].

In examples [**900**] of the lighting system, the edge-lit lightguide panel [**902**] may include external light-dispersing features on the one [**912**] or the another one [**910**] of the pair

of panel surfaces; and the another edge-lit lightguide panel [904] may include additional external light-dispersing features on the one [930] or the another one [928] of the another pair of panel surfaces. Further in those examples [900] of the lighting system, the external light-dispersing features may include positive elements such as: pigmented dots; or micro-optical features such as spherical or elliptical lenses. Also in those examples [900] of the lighting system, the external light-dispersing features may include negative elements such as: hot-pressed textured surfaces such as micro-patterns e.g. micro-grooves, lenticular patterns, prisms, fresnels, conical arrays, pyramids, domes, or laser-ablated regions. In addition in those examples [900] of the lighting system, the external light-dispersing features may have a gradually-increasing density in a direction from the peripheral edge [914] towards the longitudinal axis [908]; and the additional external light-dispersing features may have a gradually-increasing density in another direction from the another peripheral edge [932] towards the longitudinal axis [908].

In examples [900] of the lighting system, the another one [910] of the pair of panel surfaces may have a light-reflective layer [1002]; and the another one [928] of the another pair of panel surfaces may have another light-reflective layer [1004]. Further in those examples [900] of the lighting system, the another one [910] of the pair of panel surfaces may have a specular light-reflective layer [1002]; and the another one [928] of the another pair of panel surfaces may have another specular light-reflective layer [1004]. Additionally in those examples [900] of the lighting system, the another one [910] of the pair of panel surfaces may have a metallic light-reflective layer [1002]; and the another one [928] of the another pair of panel surfaces may have another metallic light-reflective layer [1004]. In some of those examples [900] of the lighting system, the metallic light-reflective layers [1002], [1004] may have a composition that includes: silver, platinum, palladium, aluminum, zinc, gold, iron, copper, tin, antimony, titanium, chromium, nickel, or molybdenum. In additional examples [900] of the lighting system, the another one [910] of the pair of panel surfaces may have a light-reflective layer [1002]; and the another one [928] of the another pair of panel surfaces may have another light-reflective layer [1004]; and each of the light-reflective layers [1002], [1004] may have a minimum visible-light reflection value from any incident angle being at least about ninety percent (90%) or being at least about ninety-five percent (95%).

In examples [900] of the lighting system, the plurality of the semiconductor light-emitting devices [920], [922] may include an array of the semiconductor light-emitting devices [920], [922] being mutually spaced apart along the longitudinal axis [908]; and the another plurality of the semiconductor light-emitting devices [938], [940] may include another array of the semiconductor light-emitting devices [938], [940] being mutually spaced apart along the longitudinal axis [908]. Additionally in those examples [900] of the lighting system, the further plurality of the semiconductor light-emitting devices [956], [958] may include a further array of the semiconductor light-emitting devices [956], [958] being mutually spaced apart along the longitudinal axis [908].

In examples [900] of the lighting system, the plurality of the semiconductor light-emitting devices [920], [922] may be collectively configured for generating the visible-light emissions [924], [926] as having a selectable perceived color point; and the another plurality of the semiconductor light-emitting devices [938], [940] may be collectively configured for generating the additional visible-light emissions [942], [944] as having another selectable perceived color point. Additionally in those examples [900] of the lighting system, the further plurality of the semiconductor light-emitting devices [956], [958] may be collectively configured for generating the further visible-light emissions [960], [962] as having a further selectable perceived color point.

In some examples [900] of the lighting system, the plurality of the semiconductor light-emitting devices [920], [922] may include a plurality of clusters of the semiconductor light-emitting devices [920], [922] being co-located together, each one of the plurality of clusters being collectively configured for generating the visible-light emissions [924], [926] as having a selectable perceived color point; and the another plurality of the semiconductor light-emitting devices [938], [940] may include another plurality of clusters of the semiconductor light-emitting devices [938], [940] being co-located together, each one of the another plurality of clusters being collectively configured for generating the additional visible-light emissions [942], [944] as having another selectable perceived color point. Also in that example [900] of the lighting system, the further plurality of the semiconductor light-emitting devices [956], [958] may include a further plurality of clusters of the semiconductor light-emitting devices [956], [958] being co-located together, each one of the further plurality of clusters being collectively configured for generating the further visible-light emissions [960], [962] as having a further selectable perceived color point. As an example [900] of the lighting system, each of the pluralities of clusters of the semiconductor light-emitting devices [920], [922], [938], [940], [956], [958] may include two or three or more co-located semiconductor light-emitting devices being configured for collectively generating the visible-light emissions [924], [926] and the additional visible-light emissions [942], [944] and the further visible-light emissions [960], [962] as having the respective selectable perceived color points.

In examples [900] of the lighting system, a plurality of semiconductor light-emitting devices [920], [922], or a plurality of semiconductor light-emitting devices [938], [940], or a plurality of semiconductor light-emitting devices [956], [958] may be arranged in a chip-on-board (not shown) array, or in a discrete (not shown) array on a printed circuit board (not shown). Semiconductor light-emitting device arrays including chip-on-board arrays and discrete arrays may be conventionally fabricated by persons of ordinary skill in the art. Further, the semiconductor light-emitting devices [920], [922], [938], [940], [956], [958] of the example [900] of the lighting system may be provided with drivers (not shown) and power supplies (not shown) being conventionally fabricated and configured by persons of ordinary skill in the art.

In examples [900], the lighting system may be configured for causing emission of a portion of the further visible-light emissions [960], [962] as being within a field angle of the bowl reflector [906] and for causing emission of another portion of the further visible-light emissions [960], [962] as being outside the field angle of the bowl reflector [906]; and the emission aperture [964] may be configured for redirecting some of the another portion of the further visible-light emissions [960], [962]. Further in those examples [900] of the lighting system, the bowl reflector [906] may, as examples, have a beam angle being within a range of between about thirty degrees (30°) and about ten degrees (10°). Additionally in those examples [900] of the lighting system, the bowl reflector [906] may, as examples have a field angle being within a range of between about sixty degrees (60°) and about twenty degrees (20°).

In examples [900] of the lighting system, the emission aperture [964] may be positioned for redirecting a part of the another portion of the further visible-light emissions [960], [962] being emitted at the third light output interface [948] in directions deviating from the central light-emission axis [946] by greater than about seventy degrees (70°). In further examples [900] of the lighting system, the emission aperture [964] may be positioned for redirecting a part of the another portion of the further visible-light emissions [960], [962] being emitted at the third light output interface [948] in directions deviating from the central light-emission axis [946] by greater than about sixty degrees (60°).

As an example [900] of the lighting system, the lateral edges [978], [980], [982], [984] of the edge-lit lightguide panels [902], [904] may be curvilinear; and the one [912] of the pair of panel surfaces may be concave; and the one [930] of the another pair of panel surfaces may be concave. Further in that example [900] of the lighting system, as can be seen in FIG. 10, the concave panel surfaces [912], [930] of the emission aperture [964] may be cooperatively positioned for mechanically shielding and thus redirecting some of the further visible-light emissions [960], [962] being emitted at the third light output interface [948] in directions deviating from the central light-emission axis [946] by greater than about sixty degrees (60°). Additionally in that example [900] of the lighting system, redirection of the visible-light emissions [960], [962] being emitted at the third light output interface [948] in high-angle directions being greater than about sixty degrees (60°) or seventy degrees (70°) may substantially reduce objectionable glare.

In examples [900] of the lighting system, the bowl reflector [906] may have a beam angle being within a range of between about thirty degrees (30°) and about twenty degrees (20°). Further in those examples [900] of the lighting system, the bowl reflector [906] may have a field angle being within a range of between about sixty degrees (60°) and about forty degrees (40°). Additionally in those examples [900], the lighting system may be configured for causing emission of a portion of the further visible-light emissions [960], [962] as being within the field angle of the bowl reflector [906] and for causing emission of another portion of the further visible-light emissions [960], [962] as being outside the field angle of the bowl reflector [906]; and the emission aperture [964] may be configured for redirecting some of the another portion of the further visible-light emissions [960], [962]. Further in those examples [900], the emission aperture [964] may be positioned for redirecting a part of the another portion of the further visible-light emissions [960], [962] being emitted at the third light output interface [948] in directions deviating from the central light-emission axis [946] by greater than about sixty degrees (60°), or deviating from the central light-emission axis by greater than about seventy degrees (70°).

In other examples [900] of the lighting system, the bowl reflector [906] may have a beam angle being within a range of between about twenty degrees (20°) and about ten degrees (10°); or within a range of between about fifteen degrees (15°) and about ten degrees (10°). Further in those examples [900] of the lighting system, the bowl reflector [906] may have a field angle being respectively within a range of between about forty degrees (40°) and about twenty degrees (20°), or within a range of between about thirty degrees (30°) and about twenty degrees (20°). Further in those examples [900] of the lighting system, the third light output interface [948] may include internal or external light-dispersing features; and the third light output interface [948] may cause the bowl reflector [906] to have an effective field angle being within a range of between about sixty degrees (60°) and about forty degrees (40°). Additionally in those examples [900], the lighting system may be configured for causing emission of a portion of the further visible-light emissions [960], [962] as being within the effective field angle of the bowl reflector [906] and for causing emission of another portion of the further visible-light emissions [960], [962] as being outside the effective field angle of the bowl reflector [906]; and the emission aperture [964] may be configured for redirecting some of the another portion of the further visible-light emissions [960], [962]. Further in those examples [900], the emission aperture [964] may be positioned for redirecting a part of the another portion of the further visible-light emissions [960], [962] being emitted at the third light output interface [948] in directions deviating from the central light-emission axis [946] by greater than about sixty degrees (60°), or deviating from the central light-emission axis by greater than about seventy degrees (70°).

In examples [900], the lighting system may include a controller (not shown) for the visible-light source [918] and for the another visible-light source [936] and for the further visible-light source [954], the controller being configured for causing the visible-light emissions [924], [926] to have a selectable perceived color point and for causing the additional visible-light emissions [942], [944] to have another selectable perceived color point and for causing the further visible-light emissions [960], [962] to have a further selectable perceived color point. Further in those examples [900] of the lighting system, the controller may be configured for causing the visible-light emissions [924], [926] to have a selectable and adjustable intensity and for causing the additional visible-light emissions [942], [944] to have another selectable and adjustable intensity and for causing the further visible-light emissions [960], [962] to have a further selectable and adjustable intensity. Additionally in those examples [900] of the lighting system, the controller may be configured for causing the combined visible-light emissions [966], [968] to generate a down-lighting pattern being: wall graze, table with wall fill, wall wash left, wall wash right, double wall wash, wall wash left plus floor, wall wash right plus floor, room, or batwing. Also in those examples [900] of the lighting system, the controller may be configured for selection among a plurality of different pre-programmed combinations of the intensities for the visible-light emissions [924], [926], the additional visible-light emissions [942], [944], and the further visible-light emissions [960], [962]. Further in those examples [900] of the lighting system, the controller may be configured for adjusting, over a selectable time period, the intensities for the visible-light emissions [924], [926], the additional visible-light emissions [942], [944], and the further visible-light emissions [960], [962] from a one of the plurality of pre-programmed combinations to another one of the plurality of pre-programmed combinations. Additionally in those examples [900], the lighting system may further include an ambient light sensor (not shown); and the controller may be configured, in response to the ambient light sensor, for adjusting the intensities for the visible-light emissions [924], [926], the additional visible-light emissions [942], [944], and the further visible-light emissions [960], [962].

In other examples [900], the lighting system may include a controller (not shown) for the visible-light source [918] being configured for causing the visible-light emissions [924], [926] to have a selectable perceived color point; and may include another controller (not shown) for the another visible-light source [936] being configured for causing the

additional visible-light emissions [942], [944] to have another selectable perceived color point; and may include a further controller (not shown) for the further visible-light source [954] being configured for causing the further visible-light emissions [960], [962] to have a further selectable perceived color point. Further in those examples [900] of the lighting system, the controller may be configured for causing the visible-light emissions [924], [926] to have a selectable and adjustable intensity; and the another controller may be configured for causing the additional visible-light emissions [942], [944] to have another selectable and adjustable intensity; and the further controller may be configured for causing the further visible-light emissions [960], [962] to have a further selectable and adjustable intensity. In those examples [900] of the lighting system, the controller and the another controller and the further controller may be collectively configured for causing the combined visible-light emissions [966], [968] to generate a down-lighting pattern being: wall graze, table with wall fill, wall wash left, wall wash right, double wall wash, wall wash left plus floor, wall wash right plus floor, room, or batwing. Additionally in those examples [900] of the lighting system, the controller and the another controller and the further controller may be collectively configured for selection among a plurality of different pre-programmed combinations of the intensities for the visible-light emissions [924], [926], the additional visible-light emissions [942], [944], and the further visible-light emissions [960], [962]. Further in those examples [900] of the lighting system, the controller and the another controller and the further controller may be collectively configured for adjusting, over a selectable time period, the intensities for the visible-light emissions [924], [926], the additional visible-light emissions [942], [944], and the further visible-light emissions [960], [962] from a one of the plurality of pre-programmed combinations to another one of the plurality of pre-programmed combinations. In those examples [900], the lighting system may also include an ambient light sensor; and the controller and the another controller and the further controller may be collectively configured, in response to the ambient light sensor, for adjusting the intensities for the visible-light emissions [924], [926], the additional visible-light emissions [942], [944], and the further visible-light emissions [960], [962].

FIG. **13** is a schematic top perspective view showing an example [1300] of an implementation of a lighting system. FIG. **14** is a schematic cross-sectional view taken along the line **14-14** showing the example [1300] of the lighting system. FIG. **15** is a schematic cross-sectional view taken along the line **15-15** showing the example [1300] of the lighting system. FIG. **16** is a schematic bottom perspective view taken along the line **16** showing the example [1300] of an implementation of a lighting system.

Examples [100], [500], [900], [1300], [1800], [2300], [2800], [3700], and [4000] of lighting systems are discussed herein, respectively, in connection with FIGS. **1-4**; **5-8**; **9-12**; **13-16**; **18-21**; **22-26**; **27-31**; **37-39**; and **40-42**. Examples [1700], [2200], [2700], [3200], and [3300] of lighting controllers are discussed herein, respectively, in connection with FIGS. **17-21**; **22-26**; **27-31**; **32**, **1-4**; and **33**, **9-12**. Examples [3400], [3500], [3600] of lighting control methods are discussed herein, respectively, in connection with FIGS. **34**, **17-21**; **35**, **22-26**; and **36**, **27-31**. It is understood throughout this specification that a lighting system [100], [500], [900], [1300], [1800], [2300], [2800], [3700], [4000] may include any of the features or combinations of features that are disclosed in connection with any one or more of such lighting systems. It is further understood throughout this specification that each one of the examples [1700], [2200], [2700], [3200], [3300] of the lighting controllers may be utilized together with a lighting system [100], [500], [900], [1300], [1800], [2300], [2800], [3700], [4000] including any of the features or combinations of features that are disclosed in connection with any one or more of such lighting systems. It is additionally understood throughout this specification that each one of the examples [3400], [3500], [3600] of the lighting control methods may be utilized together with any of the examples [1700], [2200], [2700], [3200], [3300] of the lighting controllers, for controlling a lighting system [100], [500], [900], [1300], [1800], [2300], [2800], [3700], [4000] including any of the features or combinations of features that are disclosed in connection with any one or more of such lighting systems. Accordingly, FIGS. **1-42** and the entireties of the discussions of the examples [100], [500], [900], [1300], [1800], [2300], [2800], [3700], [4000] of lighting systems and the entireties of the discussions of the examples [1700], [2200], [2700], [3200], [3300] of the lighting controllers and the entireties of the discussions of the examples [3400], [3500], [3600] of lighting control methods are hereby incorporated into the following discussion of the example [1300] of an implementation of the lighting system.

As shown in FIGS. **13-16**, the example [1300] of the implementation of the lighting system includes: an edge-lit lightguide panel [1302]; another edge-lit lightguide panel [1304]; a bowl reflector [1306]; and an additional bowl reflector [1307]. In the example [1300], the edge-lit lightguide panel [1302] is extended along a longitudinal axis [1308] of the lighting system. The edge-lit lightguide panel [1302] in the example [1300] of the lighting system further has a pair of mutually-opposing panel surfaces [1310], [1312]. The edge-lit lightguide panel [1302] in the example [1300] of the lighting system also has a peripheral edge [1314] being extended along and spaced transversely away from the longitudinal axis [1308]. In the example [1300] of the lighting system, a one [1312] of the pair of panel surfaces includes a first light output interface [1316].

The example [1300] of the lighting system also includes a visible-light source [1318] including a plurality of semiconductor light-emitting devices [1320], [1322]. In the example [1300] of the lighting system, the visible-light source [1318] is configured for generating visible-light emissions [1324], [1326] from the plurality of semiconductor light-emitting devices [1320], [1322]. Further in the example [1300] of the lighting system, the visible-light source [1318] is located along the peripheral edge [1314] for directing the visible-light emissions [1324], [1326] into the edge-lit lightguide panel [1302].

In the example [1300] of the lighting system, the another edge-lit lightguide panel [1304] is extended along the longitudinal axis [1308]. Additionally in the example [1300] of the lighting system, the another edge-lit lightguide panel [1304] has another pair of mutually-opposing panel surfaces [1328], [1330]. In the example [1300] of the lighting system, the another edge-lit lightguide panel [1304] has another peripheral edge [1332] being extended along and spaced transversely away from the longitudinal axis [1308]. Further, a one [1330] of the another pair of panel surfaces in the example [1300] of the lighting system includes a second light output interface [1334].

The example [1300] of the lighting system additionally includes another visible-light source [1336] including another plurality of semiconductor light-emitting devices [1338], [1340]. In the example [1300] of the lighting system, the another visible-light source [1336] is configured for

generating additional visible-light emissions [1342], [1344] from the another plurality of semiconductor light-emitting devices [1338], [1340]. Further in the example [1300] of the lighting system, the another visible-light source [1336] is located along the another peripheral edge [1332] for directing the additional visible-light emissions [1342], [1344] into the another edge-lit lightguide panel [1304].

In the example [1300] of the lighting system, the bowl reflector [1306] has a central light-emission axis [1346] being transverse to the longitudinal axis [1308]. The bowl reflector [1306] in the example [1300] of the lighting system includes a third light output interface [1348] being located between the first and second light output interfaces [1316], [1334]. In the example [1300] of the lighting system, the third light output interface [1348] is spaced apart from a central light input interface [1350] by a visible-light-reflective side surface [1352]. The visible-light-reflective side surface [1352] in the example [1300] of the lighting system is extended along the central light-emission axis [1346] and defines a portion of a cavity [1347]. In the example [1300] of the lighting system, the bowl reflector [1306] has a further visible-light source [1354] including a further plurality of semiconductor light-emitting devices [1356], [1358]. The further visible-light source [1354] in the example [1300] of the lighting system is configured for generating further visible-light emissions [1360], [1362] from the further plurality of semiconductor light-emitting devices [1356], [1358]. In the example [1300] of the lighting system, the further visible-light source [1354] is located at the central light input interface [1350] for directing the further visible-light emissions [1360], [1362] through the cavity [1347] of the bowl reflector [1306] to the third light output interface [1348].

In the example [1300] of the lighting system, the additional bowl reflector [1307] has an additional central light-emission axis [1347] being transverse to the longitudinal axis [1308]. The additional bowl reflector [1307] in the example [1300] of the lighting system includes a fourth light output interface [1349] being spaced apart along the longitudinal axis [1308] away from the third light output interface [1348] and being located between the first and second light output interfaces [1316], [1334]. In the example [1300] of the lighting system, the fourth light output interface [1349] is spaced apart from an additional central light input interface [1351] by an additional visible-light-reflective side surface [1353]. The additional visible-light-reflective side surface [1353] in the example [1300] of the lighting system is extended along the additional central light-emission axis [1347] and defines a portion of an additional cavity [1347]. In the example [1300] of the lighting system, the additional bowl reflector [1307] has an additional visible-light source [1355] including an additional plurality of semiconductor light-emitting devices [1357], [1359]. The additional visible-light source [1355] in the example [1300] of the lighting system is configured for generating other visible-light emissions [1361], [1363] from the additional plurality of semiconductor light-emitting devices [1357], [1359]. In the example [1300] of the lighting system, the additional visible-light source [1355] is located at the additional central light input interface [1351] for directing the other visible-light emissions [1361], [1363] through the additional cavity [1347] of the additional bowl reflector [1307] to the fourth light output interface [1349].

As examples, the edge-lit lightguide panel [1302] may direct the visible-light emissions [1324], [1326] for emission from the first light output interface [1316]; and the another edge-lit lightguide panel [1304] may direct the additional visible-light emissions [1342], [1344] for emission from the second light output interface [1334]; and the bowl reflector [1306] may direct the further visible-light emissions [1360], [1362] for emission from the third light output interface [1348]; and the additional bowl reflector [1307] may direct the other visible-light emissions [1361], [1363] for emission from the fourth light output interface [1349].

In the example [1300] of the lighting system, the first, second, third and fourth light output interfaces [1316], [1334], [1348], [1349] cooperatively define an emission aperture [1364] for forming combined visible-light emissions [1366], [1368] including the visible-light emissions [1324], [1326], the additional visible-light emissions [1342], [1344], the further visible-light emissions [1360], [1362], and the other visible-light emissions [1361], [1363]. Further in the example [1300] of the lighting system, the emission aperture [1364] forms a shielding zone [1370] for redirecting some of the combined visible-light emissions [1366], [1368].

In examples [1300] of the lighting system, the visible-light-reflective side surface [1352] and the additional visible-light-reflective side surface [1353] each may have a frusto-conical cross-sectional profile in both of the directions of the lines **14-14** and **15-15** being perpendicular to the longitudinal axis [1308]. In further examples [1300] of the lighting system, the additional bowl reflector [1307] may have any combination of the further structural and performance features discussed herein with regard to the bowl reflector [1306]. As additional examples [1300], the lighting system may include (not shown) further bowl reflectors in addition to the bowl reflectors [1306]. [1307]. In examples [1300] of the lighting system, such further bowl reflectors may have any combination of the further structural and performance features discussed herein with regard to the bowl reflectors [1306] and [1307], and may be mutually spaced apart in the same manner by which the bowl reflectors [1306], [1307] are spaced apart along the longitudinal axis [1308].

In some examples [1300] of the lighting system, the bowl reflector [1306] (and likewise the additional bowl reflector [1307]) may be a converging bowl reflector [1306] being configured for causing convergence of the further visible-light emissions [1360], [1362] in their travel along the central light-emission axis [1346] toward the third light output interface [1348]. In examples [1300] of the lighting system, the visible-light-reflective side surface [1352] of the bowl reflector [1306] may be configured for reflecting the further visible-light emissions [1360], [1362] toward a horizon [1363] of the bowl reflector [1306] as having a beam angle being within a range of between about ten degrees (10°) and about thirty degrees (30°). As further examples [1300] of the lighting system, the visible-light-reflective side surface [1352] of the bowl reflector [1306] may be configured for reflecting the further visible-light emissions [1360], [1362] toward a horizon [1363] of the bowl reflector [1306] as having a field angle being within a range of between about twenty degrees (20°) and about sixty degrees (60°).

As additional examples [1300] of the lighting system, the visible-light-reflective side surface [1352] of the bowl reflector [1306] (and likewise of the additional bowl reflector [1307]) may be a specular light-reflective surface. In further examples [1300] of the lighting system, the visible-light-reflective side surface [1352] of the bowl reflector [1306] (and likewise the additional bowl reflector [1307]) may be a metallic light-reflective surface. In some of those examples [1300] of the lighting system, the metallic layer of the visible-light-reflective side surface [1352] may have a

composition that includes: silver, platinum, palladium, aluminum, zinc, gold, iron, copper, tin, antimony, titanium, chromium, nickel, or molybdenum.

In examples [**1300**] of the lighting system, the visible-light-reflective side surface [**1352**] of the bowl reflector [**1306**] (and likewise of the additional bowl reflector [**1307**]) may have a minimum visible-light reflection value from any incident angle being: at least about ninety percent (90%); or at least about ninety-five percent (95%). As further examples [**1300**] of the lighting system, the visible-light-reflective side surface [**1352**] of the bowl reflector [**1306**] may have a maximum visible-light transmission value from any incident angle being: no greater than about ten percent (10%); or no greater than about five percent (5%).

In examples [**1300**] of the lighting system, a portion of the visible-light-reflective side surface [**1352**] of the bowl reflector [**1306**] (and likewise of the additional bowl reflector [**1307**]) may be a parabolic surface. In further examples [**1300**] of the lighting system, a portion of the visible-light-reflective side surface [**1352**] of the bowl reflector [**1306**] (and likewise of the additional bowl reflector [**1307**]) may be a part of an elliptic paraboloid or a part of a paraboloid of revolution.

As further examples [**1300**] of the lighting system, a portion of the visible-light-reflective side surface [**1352**] of the bowl reflector [**1306**] (and likewise of the additional bowl reflector [**1307**]) may be a multi-segmented parabolic surface. In additional examples [**1300**] of the lighting system, the visible-light-reflective side surface [**1352**] may include a plurality of vertically-faceted sections being mutually spaced apart around and joined together around the central light-emission axis [**1346**]. Also in those additional examples [**1300**] of the lighting system, each one of the vertically-faceted sections may have a generally pie-wedge-shaped perimeter. Further in those additional examples [**1300**] of the lighting system, each one of the vertically-faceted sections may form a one of a plurality of facets of the visible-light-reflective side surface [**1352**]; and each one of the facets may have a concave visible-light reflective surface [**1352**]. Also in those additional examples [**1300**] of the lighting system, each one of the vertically-faceted sections may form a one of a plurality of facets of the visible-light-reflective side surface [**1352**]; and each one of the facets may have a convex visible-light reflective surface [**1352**]. Further in those additional examples [**1300**] of the lighting system, each one of the vertically-faceted sections may form a one of a plurality of facets of the visible-light-reflective side surface [**1352**]; and each one of the facets may have a generally flat visible-light reflective surface. As further examples [**1300**] of the lighting system, either or both of the bowl reflectors [**1306**], [**1307**], and any further such bowl reflectors included in the example [**1300**] of the lighting system, may be substituted by a lighting system as is disclosed in commonly-owned Xin Zhang et al., Patent Cooperation Treaty International patent application serial No. PCT/US2018/016662 filed on Feb. 2, 2018 and entitled "Lighting Systems Generating Partially-Collimated Light Emissions," the entirety of which hereby is incorporated herein by reference.

In some examples [**1300**] of the lighting system, the edge-lit lightguide panel [**1302**] may have a first pair of lateral edges [**1378**], [**1380**] being mutually spaced apart along the longitudinal axis [**1308**]; and the another edge-lit lightguide panel [**1304**] may have a second pair of lateral edges [**1382**], [**1384**] being mutually spaced apart along the longitudinal axis [**1308**]. Further in those examples [**1300**] of the lighting system, each one of the lateral edges [**1378**], [**1380**], [**1382**], [**1384**] may be linear; and the one [**1312**] of the pair of panel surfaces may be generally flat; and the one [**1330**] of the another pair of panel surfaces may be generally flat.

In additional examples [**1300**] of the lighting system, the edge-lit lightguide panel [**1302**] may be configured for directing the visible-light emissions [**1324**], [**1326**] in first directions towards the longitudinal axis [**1308**]; and the another edge-lit lightguide panel [**1304**] may be configured for directing the additional visible-light emissions [**1342**], [**1344**] in second directions, being symmetrically opposed to the first directions, towards the longitudinal axis [**1308**]. In those additional examples, the edge-lit lightguide panel [**1302**] may further direct the visible-light emissions [**1324**], [**1326**] for emission from the first light output interface [**1316**]; and the another edge-lit lightguide panel [**1304**] may further direct the additional visible-light emissions [**1342**], [**1344**] for emission from the second light output interface [**1334**]; and the bowl reflector [**1306**] may direct the further visible-light emissions [**1360**], [**1362**] for emission from the third light output interface [**1348**]; and the another bowl reflector [**1307**] may direct the other visible-light emissions [**1361**], [**1363**] for emission from the fourth light output interface [**1349**].

In some examples [**1300**] of the lighting system, the edge-lit lightguide panel [**1302**] and the another edge-lit lightguide panel [**1304**] may be integrally formed together with the bowl reflectors [**1306**], [**1307**]. In other examples [**1300**] of the lighting system, the edge-lit lightguide panel [**1302**] may have a central edge represented by a dashed line [**1386**] being extended along the longitudinal axis [**1308**] and being spaced transversely away from the peripheral edge [**1314**]; and the another edge-lit lightguide panel [**1304**] may have another central edge represented by a dashed line [**1388**] being extended along the longitudinal axis [**1308**] and being spaced transversely away from the another peripheral edge [**1332**]; and the bowl reflectors [**1306**], [**1307**] may be located between and attached to the central edge [**1386**] and the another central edge [**1388**].

In examples [**1300**] of the lighting system, the edge-lit lightguide panel [**1302**] may include internal light-dispersing features; and the another edge-lit lightguide panel [**1304**] may include additional internal light-dispersing features. Further in those examples [**1300**] of the lighting system, the internal light-dispersing features may include positive elements such as: particles having various shapes being e.g. spheroidal or polygonal; particles having various material compositions including, e.g., phosphors, quantum dots, and pigmented dots; micro-optical features such as spherical or elliptical lenses, and reflective micro-scale particles. Additionally in those examples [**1300**] of the lighting system, the internal light-dispersing features may include negative elements such as: hot-pressed micro-patterns e.g. micro-grooves, lenticular patterns, prisms, fresnels, conical arrays, pyramids, or domes. Also in those examples [**1300**] of the lighting system, the internal light-dispersing features may have a gradually-increasing density in a direction from the peripheral edge [**1314**] towards the longitudinal axis [**1308**]; and the additional internal light-dispersing features may have a gradually-increasing density in another direction from the another peripheral edge [**1332**] towards the longitudinal axis [**1308**].

In examples [**1300**] of the lighting system, the edge-lit lightguide panel [**1302**] may include external light-dispersing features on the one [**1312**] or the another one [**1310**] of the pair of panel surfaces; and the another edge-lit lightguide panel [**1304**] may include additional external light-dispers-

ing features on the one [1330] or the another one [1328] of the another pair of panel surfaces. Further in those examples [1300] of the lighting system, the external light-dispersing features may include positive elements such as: pigmented dots; or micro-optical features such as spherical or elliptical lenses. Also in those examples [1300] of the lighting system, the external light-dispersing features may include negative elements such as: hot-pressed textured surfaces such as micro-patterns e.g. micro-grooves, lenticular patterns, prisms, fresnels, conical arrays, pyramids, domes, or laser-ablated regions. In addition in those examples [1300] of the lighting system, the external light-dispersing features may have a gradually-increasing density in a direction from the peripheral edge [1314] towards the longitudinal axis [1308]; and the additional external light-dispersing features may have a gradually-increasing density in another direction from the another peripheral edge [1332] towards the longitudinal axis [1308].

In examples [1300] of the lighting system, the another one [1310] of the pair of panel surfaces may have a light-reflective layer [1402]; and the another one [1328] of the another pair of panel surfaces may have another light-reflective layer [1404]. Further in those examples [1300] of the lighting system, the another one [1310] of the pair of panel surfaces may have a specular light-reflective layer [1402]; and the another one [1328] of the another pair of panel surfaces may have another specular light-reflective layer [1404]. Additionally in those examples [1300] of the lighting system, the another one [1310] of the pair of panel surfaces may have a metallic light-reflective layer [1402]; and the another one [1328] of the another pair of panel surfaces may have another metallic light-reflective layer [1404]. In some of those examples [1300] of the lighting system, the metallic light-reflective layers [1402], [1404] may have a composition that includes: silver, platinum, palladium, aluminum, zinc, gold, iron, copper, tin, antimony, titanium, chromium, nickel, or molybdenum. In additional examples [1300] of the lighting system, the another one [1310] of the pair of panel surfaces may have a light-reflective layer [1402]; and the another one [1328] of the another pair of panel surfaces may have another light-reflective layer [1404]; and each of the light-reflective layers [1402], [1404] may have a minimum visible-light reflection value from any incident angle being at least about ninety percent (90%) or being at least about ninety-five percent (95%).

In examples [1300] of the lighting system, the plurality of the semiconductor light-emitting devices [1320], [1322] may include an array of the semiconductor light-emitting devices [1320], [1322] being mutually spaced apart along the longitudinal axis [1308]; and the another plurality of the semiconductor light-emitting devices [1338], [1340] may include another array of the semiconductor light-emitting devices [1338], [1340] being mutually spaced apart along the longitudinal axis [1308]. Additionally in those examples [1300] of the lighting system, the further plurality of the semiconductor light-emitting devices [1356], [1358] may include a further array of the semiconductor light-emitting devices [1356], [1358] being mutually spaced apart along the longitudinal axis [1308]. Further in those examples [1300] of the lighting system, the additional plurality of the semiconductor light-emitting devices [1357], [1359] may include an additional array of the semiconductor light-emitting devices [1357], [1359] being mutually spaced apart along the longitudinal axis [1308].

In examples [1300] of the lighting system, the plurality of the semiconductor light-emitting devices [1320], [1322] may be collectively configured for generating the visible-light emissions [1324], [1326] as having a selectable perceived color point; and the another plurality of the semiconductor light-emitting devices [1338], [1340] may be collectively configured for generating the additional visible-light emissions [1342], [1344] as having another selectable perceived color point. Additionally in those examples [1300] of the lighting system, the further plurality of the semiconductor light-emitting devices [1356], [1358] may be collectively configured for generating the further visible-light emissions [1360], [1362] as having a further selectable perceived color point. Further in those examples [1300] of the lighting system, the additional plurality of the semiconductor light-emitting devices [1357], [1359] may be collectively configured for generating the other visible-light emissions [1361], [1363] as having another selectable perceived color point.

In some examples [1300] of the lighting system, the plurality of the semiconductor light-emitting devices [1320], [1322] may include a plurality of clusters of the semiconductor light-emitting devices [1320], [1322] being co-located together, each one of the plurality of clusters being collectively configured for generating the visible-light emissions [1324], [1326] as having a selectable perceived color point; and the another plurality of the semiconductor light-emitting devices [1338], [1340] may include another plurality of clusters of the semiconductor light-emitting devices [1338], [1340] being co-located together, each one of the another plurality of clusters being collectively configured for generating the additional visible-light emissions [1342], [1344] as having another selectable perceived color point. Also in that example [1300] of the lighting system, the further plurality of the semiconductor light-emitting devices [1356], [1358] may include a further plurality of clusters of the semiconductor light-emitting devices [1356], [1358] being co-located together, each one of the further plurality of clusters being collectively configured for generating the further visible-light emissions [1360], [1362] as having a further selectable perceived color point. Additionally in that example [1300] of the lighting system, the additional plurality of the semiconductor light-emitting devices [1357], [1359] may include an additional plurality of clusters of the semiconductor light-emitting devices [1357], [1359] being co-located together, each one of the additional plurality of clusters being collectively configured for generating the other visible-light emissions [1361], [1363] as having another selectable perceived color point.

As an example [1300] of the lighting system, each of the pluralities of clusters of the semiconductor light-emitting devices [1320], [1322], [1338], [1340], [1356], [1358], [1357], [1359] may include two or three or more co-located semiconductor light-emitting devices being configured for collectively generating the visible-light emissions [1324], [1326] and the additional visible-light emissions [1342], [1344] and the further visible-light emissions [1360], [1362] and the other visible-light emissions [1361], [1363] as having the respective selectable perceived color points.

In examples [1300] of the lighting system, a plurality of semiconductor light-emitting devices [1320], [1322], or a plurality of semiconductor light-emitting devices [1338], [1340], or a plurality of semiconductor light-emitting devices [1356], [1358], or aplurality of semiconductor light-emitting devices [1357], [1359], may be arranged in a chip-on-board (not shown) array, or in a discrete (not shown) array on a printed circuit board (not shown). Semiconductor light-emitting device arrays including chip-on-board arrays and discrete arrays may be conventionally fabricated by

persons of ordinary skill in the art. Further, the semiconductor light-emitting devices [**1320**], [**1322**], [**1338**], [**1340**], [**1356**], [**1358**], [**1357**], [**1359**] of the example [**1300**] of the lighting system may be provided with drivers (not shown) and power supplies (not shown) being conventionally fabricated and configured by persons of ordinary skill in the art.

In examples [**1300**], the lighting system may be configured for causing emission of a portion of the further visible-light emissions [**1360**], [**1362**] (and likewise the other visible-light emissions [**1361**], [**1363**]) as being within a field angle of the bowl reflector [**1306**] (or likewise of the bowl reflector [**1307**]) and for causing emission of another portion of the further visible-light emissions [**1360**], [**1362**] as being outside the field angle of the bowl reflector [**1306**]; and the emission aperture [**1364**] may be configured for redirecting some of the another portion of the further visible-light emissions [**1360**], [**1362**]. Further in those examples [**1300**] of the lighting system, the bowl reflector [**1306**] may, as examples, have a beam angle being within a range of between about thirty degrees (30°) and about ten degrees (10°). Additionally in those examples [**1300**] of the lighting system, the bowl reflector [**1306**] may, as examples have a field angle being within a range of between about sixty degrees (60°) and about twenty degrees (20°).

In examples [**1300**] of the lighting system, the emission aperture [**1364**] may be positioned for redirecting a part of the another portion of the further visible-light emissions [**1360**], [**1362**] (or likewise of the other visible-light emissions [**1361**], [**1363**]) being emitted at the third light output interface [**1348**] in directions deviating from the central light-emission axis [**1346**] by greater than about seventy degrees (70°). In further examples [**1300**] of the lighting system, the emission aperture [**1364**] may be positioned for redirecting a part of the another portion of the further visible-light emissions [**1360**], [**1362**] being emitted at the third light output interface [**1348**] in directions deviating from the central light-emission axis [**1346**] by greater than about sixty degrees (60°).

As an example [**1300**] of the lighting system, the lateral edges [**1378**], [**1380**], [**1382**], [**1384**] of the edge-lit light-guide panels [**1302**], [**1304**] may be linear; and the one [**1312**] of the pair of panel surfaces may be generally flat; and the one [**1330**] of the another pair of panel surfaces may be generally flat. Further in that example [**1300**] of the lighting system, as can be seen in FIG. **14**, the flat panel surfaces [**1312**], [**1330**] of the emission aperture [**1364**] may be cooperatively positioned for mechanically shielding and thus redirecting some of the further visible-light emissions [**1360**], [**1362**] being emitted at the third light output interface [**1348**] in directions deviating from the central light-emission axis [**1346**] by greater than about sixty degrees (60°). Additionally in that example [**1300**] of the lighting system, redirection of the visible-light emissions [**1360**], [**1362**] being emitted at the third light output interface [**1348**] in high-angle directions being greater than about sixty degrees (60°) or seventy degrees (70°) may substantially reduce objectionable glare.

In examples [**1300**] of the lighting system, the bowl reflector [**1306**] (or likewise the additional bowl reflector [**1307**]) may have a beam angle being within a range of between about thirty degrees (30°) and about twenty degrees (20°). Further in those examples [**1300**] of the lighting system, the bowl reflector [**1306**] may have a field angle being within a range of between about sixty degrees (60°) and about forty degrees (40°). Additionally in those examples [**1300**], the lighting system may be configured for causing emission of a portion of the further visible-light emissions [**1360**], [**1362**] as being within the field angle of the bowl reflector [**1306**] and for causing emission of another portion of the further visible-light emissions [**1360**], [**1362**] as being outside the field angle of the bowl reflector [**1306**]; and the emission aperture [**1364**] may be configured for redirecting some of the another portion of the further visible-light emissions [**1360**], [**1362**]. Further in those examples [**1300**], the emission aperture [**1364**] may be positioned for redirecting a part of the another portion of the further visible-light emissions [**1360**], [**1362**] being emitted at the third light output interface [**1348**] in directions deviating from the central light-emission axis [**1346**] by greater than about sixty degrees (60°), or deviating from the central light-emission axis by greater than about seventy degrees (70°).

In other examples [**1300**] of the lighting system, the bowl reflector [**1306**] (or likewise the additional bowl reflector [**1307**]) may have abeam angle being within a range of between about twenty degrees (20°) and about ten degrees (10°); or within a range of between about fifteen degrees (15°) and about ten degrees (10°). Further in those examples [**1300**] of the lighting system, the bowl reflector [**1306**] may have a field angle being respectively within a range of between about forty degrees (40°) and about twenty degrees (20°), or within a range of between about thirty degrees (30°) and about twenty degrees (20°). Further in those examples [**1300**] of the lighting system, the third light output interface [**1348**] may include internal or external light-dispersing features; and the third light output interface [**1348**] may cause the bowl reflector [**1306**] to have an effective field angle being within a range of between about sixty degrees (60°) and about forty degrees (40°). Additionally in those examples [**1300**], the lighting system may be configured for causing emission of a portion of the further visible-light emissions [**1360**], [**1362**] as being within the effective field angle of the bowl reflector [**1306**] and for causing emission of another portion of the further visible-light emissions [**1360**], [**1362**] as being outside the effective field angle of the bowl reflector [**1306**]; and the emission aperture [**1364**] may be configured for redirecting some of the another portion of the further visible-light emissions [**1360**], [**1362**]. Further in those examples [**1300**], the emission aperture [**1364**] may be positioned for redirecting a part of the another portion of the further visible-light emissions [**1360**], [**1362**] being emitted at the third light output interface [**1348**] in directions deviating from the central light-emission axis [**1346**] by greater than about sixty degrees (60°), or deviating from the central light-emission axis by greater than about seventy degrees (70°).

In examples [**1300**], the lighting system may include a controller (not shown) for the visible-light source [**1318**] and for the another visible-light source [**1336**] and for the further visible-light source [**1354**] and for the additional visible-light source [**1355**], the controller being configured for causing the visible-light emissions [**1324**], [**1326**] to have a selectable perceived color point and for causing the additional visible-light emissions [**1342**], [**1344**] to have another selectable perceived color point and for causing the further visible-light emissions [**1360**], [**1362**] to have a further selectable perceived color point and for causing the other visible-light emissions [**1361**], [**1363**] to have an additional selectable perceived color point. Further in those examples [**1300**] of the lighting system, the controller may be configured for causing the visible-light emissions [**1324**], [**1326**] to have a selectable and adjustable intensity and for causing the additional visible-light emissions [**1342**], [**1344**] to have another selectable and adjustable intensity and for causing

the further visible-light emissions [1360], [1362] to have a further selectable and adjustable intensity and for causing the other visible-light emissions [1361], [1363] to have an additional selectable and adjustable intensity. Additionally in those examples [1300] of the lighting system, the controller may be configured for causing the combined visible-light emissions [1366], [1368] to generate a down-lighting pattern being: wall graze, table with wall fill, wall wash left, wall wash right, double wall wash, wall wash left plus floor, wall wash right plus floor, room, or batwing. Also in those examples [1300] of the lighting system, the controller may be configured for selection among a plurality of different pre-programmed combinations of the intensities for the visible-light emissions [1324], [1326], the additional visible-light emissions [1342], [1344], the further visible-light emissions [1360], [1362] and the other visible-light emissions [1361], [1363]. Further in those examples [1300] of the lighting system, the controller may be configured for adjusting, over a selectable time period, the intensities for the visible-light emissions [1324], [1326], the additional visible-light emissions [1342], [1344], the further visible-light emissions [1360], [1362] and the other visible-light emissions [1361], [1363] from a one of the plurality of pre-programmed combinations to another one of the plurality of pre-programmed combinations. Additionally in those examples [1300], the lighting system may further include an ambient light sensor (not shown); and the controller may be configured, in response to the ambient light sensor, for adjusting the intensities for the visible-light emissions [1324], [1326], the additional visible-light emissions [1342], [1344], the further visible-light emissions [1360], [1362], and the other visible-light emissions [1361], [1363].

In other examples [1300], the lighting system may include a controller (not shown) for the visible-light source [1318] being configured for causing the visible-light emissions [1324], [1326] to have a selectable perceived color point; and may include another controller (not shown) for the another visible-light source [1336] being configured for causing the additional visible-light emissions [1342], [1344] to have another selectable perceived color point; and may include a further controller (not shown) for the further visible-light source [1354] being configured for causing the further visible-light emissions [1360], [1362] to have a further selectable perceived color point; and may include an additional controller (not shown) for the additional visible-light source [1355] being configured for causing the other visible-light emissions [1361], [1363] to have an additional selectable perceived color point. Further in those examples [1300] of the lighting system, the controller may be configured for causing the visible-light emissions [1324], [1326] to have a selectable and adjustable intensity; and the another controller may be configured for causing the additional visible-light emissions [1342], [1344] to have another selectable and adjustable intensity; and the further controller may be configured for causing the further visible-light emissions [1360], [1362] to have a further selectable and adjustable intensity; and the additional controller may be configured for causing the other visible-light emissions [1361], [1363] to have an additional selectable and adjustable intensity. In those examples [1300] of the lighting system, the controller and the another controller and the further controller and the additional controller may be collectively configured for causing the combined visible-light emissions [1366], [1368] to generate a down-lighting pattern being: wall graze, table with wall fill, wall wash left, wall wash right, double wall wash, wall wash left plus floor, wall wash right plus floor, room, or batwing. Additionally in those examples [1300] of the lighting system, the controller and the another controller and the further controller and the additional controller may be collectively configured for selection among a plurality of different pre-programmed combinations of the intensities for the visible-light emissions [1324], [1326], the additional visible-light emissions [1342], [1344], the further visible-light emissions [1360], [1362]; and the other visible-light emissions [1361], [1363]. Further in those examples [1300] of the lighting system, the controller and the another controller and the further controller and the additional controller may be collectively configured for adjusting, over a selectable time period, the intensities for the visible-light emissions [1324], [1326], the additional visible-light emissions [1342], [1344], the further visible-light emissions [1360], [1362], and the other visible-light emissions [1361], [1363], from a one of the plurality of pre-programmed combinations to another one of the plurality of pre-programmed combinations. In those examples [1300], the lighting system may also include an ambient light sensor; and the controller and the another controller and the further controller and the additional controller may be collectively configured, in response to the ambient light sensor, for adjusting the intensities for the visible-light emissions [1324], [1326], the additional visible-light emissions [1342], [1344], and the further visible-light emissions [1360], [1362], and the other visible-light emissions [1361], [1363].

In other examples [1300], the lighting system may further include an auxiliary edge-lit lightguide panel [1303] and another auxiliary edge-lit lightguide panel [1305]. In those other examples [1300] of the lighting system, the auxiliary edge-lit lightguide panel [1303] may be extended along the longitudinal axis [1308]. Further in those other examples [1300] of the lighting system, the auxiliary edge-lit lightguide panel [1303] may have an auxiliary pair of mutually-opposing panel surfaces [1309], [1311]; and the auxiliary edge-lit lightguide panel [1303] may have an auxiliary peripheral edge [1313] being extended along and spaced transversely away from the longitudinal axis [1308]. Also in those other examples [1300] of the lighting system, a one [1309] of the auxiliary pair of panel surfaces may form an auxiliary light output interface [1315]. Additionally in those other examples [1300], the lighting system may have an auxiliary visible-light source [1317] including an auxiliary plurality of semiconductor light-emitting devices [1319], [1321]. In those other examples [1300] of the lighting system, the auxiliary visible-light source [1317] may be configured for generating auxiliary visible-light emissions [1323], [1325] from the auxiliary plurality of semiconductor light-emitting devices [1319], [1321]; and the auxiliary visible-light source [1317] may be located along the auxiliary peripheral edge [1313] for directing the auxiliary visible-light emissions [1323], [1325] into the auxiliary edge-lit lightguide panel [1303].

In those other examples [1300] of the lighting system, the another auxiliary edge-lit lightguide panel [1305] may be extended along the longitudinal axis [1308]. Further in those other examples [1300] of the lighting system, the another auxiliary edge-lit lightguide panel [1305] may have another auxiliary pair of mutually-opposing panel surfaces [1327], [1329]; and the another auxiliary edge-lit lightguide panel [1305] may have another auxiliary peripheral edge [1331] being extended along and spaced transversely away from the longitudinal axis [1308]. Also in those other examples [1300] of the lighting system, a one [1327] of the another auxiliary pair of panel surfaces may form another auxiliary light output interface [1333]. Additionally in those other

examples [1300], the lighting system may have another auxiliary visible-light source [1335] including another auxiliary plurality of semiconductor light-emitting devices [1337], [1339]. In those other examples [1300] of the lighting system, the another auxiliary visible-light source [1335] may be configured for generating additional auxiliary visible-light emissions [1341], [1343] from the another auxiliary plurality of semiconductor light-emitting devices [1337], [1339]; and the another auxiliary visible-light source [1335] may be located along the another auxiliary peripheral edge [1331] for directing the additional auxiliary visible-light emissions [1341], [1343] into the another auxiliary edge-lit lightguide panel [1305].

Additionally in those other examples [1300], the first, second and third light output interfaces [1316], [1334], [1348] may cooperatively define the emission aperture [1364] for forming the combined visible-light emissions [1360], [1362] as being down-light emissions; and the auxiliary light output interface [1315] and the another auxiliary light output interface [1333] may cooperatively define another emission aperture [1345] for forming combined visible up-light emissions [1347], [1349] including the auxiliary visible-light emissions [1323], [1325] and the additional auxiliary visible-light emissions [1341], [1343].

FIG. **17** is a schematic diagram of an example [1700] of a lighting controller. FIG. **18** is a schematic bottom perspective view showing an example [1800] of an implementation of a lighting system together with which the example [1700] of the lighting controller may be utilized. FIG. **19** is a schematic cross-sectional view taken along the line **19-19** showing the example [1800] of the lighting system together with which the example [1700] of the lighting controller may be utilized. FIG. **20** is a schematic cross-sectional view taken along the line **20-20** showing the example [1800] of the lighting system together with which the example [1700] of the lighting controller may be utilized. FIG. **21** is a schematic top perspective view taken along the line **21** showing the example [1800] of an implementation of a lighting system together with which the example [1700] of the lighting controller may be utilized.

Examples [1700], [2200], [2700], [3200], and [3300] of lighting controllers are discussed herein, respectively, in connection with FIGS. **17-21**; **22-26**; **27-31**; **32**, **1-4**; and **33**, **9-12**. Examples [3400], [3500], [3600] of lighting control methods are discussed herein, respectively, in connection with FIGS. **34**, **17-21**; **35**, **22-26**; and **36**, **27-31**. Examples [100], [500], [900], [1300], [1800], [2300], [2800], [3700], and [4000] of lighting systems that may for example be utilized together with the example [1700] of the lighting controller are discussed herein, respectively, in connection with FIGS. **1-4**; **5-8**; **9-12**; **13-16**; **18-21**; **22-26**; **27-31**; **37-39**; and **40-42**. It is understood throughout this specification that each one of the examples [1700], [2200], [2700], [3200], [3300] of the lighting controllers may be utilized together with a lighting system [100], [500], [900], [1300], [1800], [2300], [2800], [3700], [4000] including any of the features or combinations of features that are disclosed in connection with any one or more of such lighting systems. It is further understood throughout this specification that each one of the examples [3400], [3500], [3600] of the lighting control methods may be utilized together with any of the examples [1700], [2200], [2700], [3200], [3300] of the lighting controllers, for controlling a lighting system [100], [500], [900], [1300], [1800], [2300], [2800], [3700], [4000] including any of the features or combinations of features that are disclosed in connection with any one or more of such lighting systems. It is additionally understood throughout this specification that a lighting system [100], [500], [900], [1300], [1800], [2300], [2800], [3700], [4000] may include any of the features or combinations of features that are disclosed in connection with any one or more of such lighting systems. Accordingly, FIGS. **1-42** and the entireties of the discussions of the examples [100], [500], [900], [1300], [1800], [2300], [2800], [3700], [4000] of lighting systems and the entireties of the discussions of the examples [1700], [2200], [2700], [3200], [3300] of the lighting controllers and the entireties of the discussions of the examples [3400], [3500], [3600] of lighting control methods are hereby incorporated into the following discussions of the example [1700] of an implementation of the lighting controller and of the example [1800] of the lighting system.

As shown in FIGS. **17-21**, the example [1700] of the implementation of the lighting controller includes a control system [1702] including a first control facility [1704] and a second control facility [1706]. In the example [1700] of the lighting controller, the first control facility [1704] is for controlling a first visible-light source [1802] including a first plurality of semiconductor light-emitting devices [1804], [1806], [1808] being spaced apart from and along a longitudinal axis [1810], the first visible-light source [1802] being positioned for directing a first beam [1812] of first visible-light emissions being represented by arrows [1814], [1815] from the first plurality of semiconductor light-emitting devices [1804], [1806], [1808] in a first beam direction also represented by the arrows [1814], [1815]. In the example [1700] of the lighting controller, the second control facility [1706] is for controlling a second visible-light source [1816] including a second plurality of semiconductor light-emitting devices [1818], [1820], [1822] being spaced apart from and along the longitudinal axis [1810], the second visible-light source [1816] being positioned for directing a second beam [1824] of second visible-light emissions being represented by arrows [1826], [1827] from the second plurality of semiconductor light-emitting devices [1818], [1820], [1822] in a second beam direction also being represented by the arrows [1826], [1827]. In the example [1700] of the lighting controller, the first control facility [1704] is programmed for controlling a first intensity being represented by an arrow [1828] of the first beam [1812] of the first visible-light emissions [1814], [1815], and the second control facility [1706] is programmed for controlling a second intensity being represented by an arrow [1830] of the second beam [1824] of the second visible light emissions [1826], [1827]. In the example [1700] of the lighting controller, the control system [1702] is programmed for modulating the first intensity [1828] of the first beam [1812] and the second intensity [1830] of the second beam [1824] in a manner for causing the first and second beams [1812], [1824] of the first and second visible-light emissions [1814], [1815], [1826], [1827] to collectively emulate a progression of ambient sunlight being represented by an arrow [1832].

In some examples [1700] of the lighting controller, the control system [1702] may be programmed for causing the first and second beams [1812], [1824] to collectively emulate the progression [1832] of ambient sunlight by initially modulating the first intensity [1828] of the first beam [1812] to relatively be substantially greater than the second intensity [1830] of the second beam [1824], and by then gradually modulating the second intensity [1830] of the second beam [1824] to relatively become substantially greater than the first intensity [1828] of the first beam [1812]. In further examples [1700] of the lighting controller, the control system [1702] may be programmed for facilitating an alignment

being represented by arrows [1902], [1904] of the first beam [1812] towards a first boundary represented by a dashed line [B1] of an ambient space represented by a dashed box [S] and for facilitating another alignment being represented by arrows [1906], [1908] of the second beam [1824] towards a second boundary represented by a dashed line [B2] of the ambient space [S] being opposite to the first boundary [B1]. In some of those examples [1700] of the lighting controller, the control system [1702] may be programmed for facilitating the alignment [1902], [1904] of the first beam [1812] as being towards the first boundary [B1] of the ambient space [S] and for facilitating the alignment [1906], [1908] of the second beam [1824] as being towards the second boundary [B2] of the ambient space [S], with each of the first and second beams [1812], [1824] being respectively aligned toward the boundaries [B1] and [B2] as being spaced apart from and on opposite sides of a vertical dashed line [1910] intersecting the longitudinal axis [1810]. As additional examples [1700] of the lighting controller, the control system [1702] may include an indicator [1708] for facilitating an alignment being represented by the arrows [1902], [1904] of the first beam [1812] towards the first boundary [B1] of the ambient space [S] and for facilitating another alignment being represented by the arrows [1906], [1908] of the second beam [1824] towards the second boundary [B2] of the ambient space [S] being opposite to the first boundary [B1]. In some examples [1700] of the lighting controller, the control system [1702] may be programmed for facilitating an alignment being represented by arrows [1902], [1904] of the first beam [1812] towards an Eastward direction being represented by an arrow [1912] and for facilitating another alignment being represented by arrows [1906], [1908] of the second beam [1824] towards a Westward direction being represented by an arrow [1914]. In further examples [1700] of the lighting controller, the control system [1702] may provide the indicator [1708] as being for facilitating an alignment being represented by arrows [1902], [1904] of the first beam [1812] towards an Eastward direction being represented by the arrow [1912] and for facilitating another alignment being represented by the arrows [1906], [1908] of the second beam [1824] towards a Westward direction being represented by the arrow [1914].

In some examples [1700] of the lighting controller, the control system [1702] may regulate a distribution of a variable power input to: the first plurality of semiconductor light-emitting devices [1804], [1806], [1808] of the first visible-light source [1802] for controlling the intensity [1828] of the first visible-light emissions [1814], [1815]; and the second plurality of semiconductor light-emitting devices [1818], [1820], [1822] of the second visible-light source [1816] for controlling the intensity [1830] of the second visible-light emissions [1826], [1827].

In some examples [1700] of the lighting controller, the control system [1702] may be programmed for modulating the first intensity [1828] of the first beam [1812] and the second intensity [1830] of the second beam [1824] in a manner for causing the first and second beams [1812], [1824] of the first and second visible-light emissions [1814], [1815], [1826], [1827] to collectively emulate the progression of ambient sunlight [1832]: through a portion of a cycle extending from sunrise being represented by a line [1834] to sunset being represented by a line [1836]; or through a period beginning before sunrise; or through a period ending after sunset; or through a period both beginning before sunrise and ending after sunset. In some examples [1700] of the lighting controller, the control system [1702] may be programmed for modulating the first intensity [1828] of the first beam [1812] and the second intensity [1830] of the second beam [1824] in a manner for causing the first and second beams [1812], [1824] of the first and second visible-light emissions [1814], [1815], [1826], [1827] to collectively emulate the progression of ambient sunlight [1832] throughout the cycle extending from sunrise being represented by the line [1834] to sunset being represented by the line [1836]. In further examples [1700] of the lighting controller, the control system [1702] may be programmed for modulating the first intensity [1828] of the first beam [1812] and the second intensity [1830] of the second beam [1824] in a manner for causing the first and second beams [1812], [1824] of the first and second visible-light emissions [1814], [1815], [1826], [1827] to collectively initiate an emulation of the progression of ambient sunlight [1832] when a local sunrise occurs as represented by the line [1834] and to collectively conclude the emulation when a corresponding local sunset occurs as represented by the line [1836]. In some of those examples [1700] of the lighting controller, the control system [1702] may include an ambient light sensor [1710] being programmed for sensing an occurrence of the local sunrise [1834] or an occurrence of the local sunset [1836]. In other examples [1700] of the lighting controller, the control system [1702] may include a programmable user interface [1712] enabling an arbitrary selection of a simulated sunrise time [1834] and a simulated sunset time [1836]. In further examples [1700] of the lighting controller, the control system [1702] may be programmed for modulating the first intensity [1828] of the first beam [1812] and the second intensity [1830] of the second beam [1824] with a maximum ratio, of the first intensity [1828] divided by the second intensity [1830], or of the second intensity [1830] divided by the first intensity [1828], being at least about 10:1. In additional examples [1700] of the lighting controller, the control system [1702] may be programmed for modulating the first intensity [1828] of the first beam [1812] and the second intensity [1830] of the second beam [1824] with a maximum ratio, of the first intensity [1828] divided by the second intensity [1830], or of the second intensity [1830] divided by the first intensity [1828], being at least about 100:1.

In some examples [1700] of the lighting controller, the control system [1702] may be programmed for modulating the first intensity [1828] of the first beam [1812] in a first range, and for modulating the second intensity [1830] of the second beam [1824] in a second range, in a manner for causing the first and second beams [1812], [1824] of the first and second visible-light emissions [1814], [1815], [1826], [1827] to collectively emulate the progression of ambient sunlight [1832]. In further examples [1700] of the lighting controller, the control system [1702] may be programmed for controlling the first beam [1812] of the first visible-light emissions [1814], [1815] as having a first baseline intensity being represented by an arrow [1838] and for controlling the second beam [1824] of the second visible-light emissions [1826], [1827] as having a second baseline intensity being represented by an arrow [1840]; and the control system [1702] may be programmed for modulating the first intensity [1828] of the first beam [1812] in a first range [1842] being additive to the first baseline intensity [1838] and for modulating the second intensity [1830] of the second beam [1824] in a second range [1844] being additive to the second baseline intensity [1840], in the manner for causing the first and second beams [1812], [1824] of the first and second visible-light emissions [1814], [1815], [1826], [1827] to collectively emulate the progression of ambient sunlight [1832].

In some examples [**1700**] of the lighting controller, the control system [**1702**] may regulate a distribution of a variable baseline power input to: the first plurality of semiconductor light-emitting devices [**1804**], [**1806**], [**1808**] of the first visible-light source [**1802**] for controlling the baseline intensity [**1838**] of the first visible-light emissions [**1814**], [**1815**]; and the second plurality of semiconductor light-emitting devices [**1818**], [**1820**], [**1822**] of the second visible-light source [**1816**] for controlling the baseline intensity [**1840**] of the second visible-light emissions [**1826**], [**1827**]. Further in those examples [**1700**] of the lighting controller, the control system [**1702**] may regulate a distribution of a variable additive power input to: the first plurality of semiconductor light-emitting devices [**1804**], [**1806**], [**1808**] of the first visible-light source [**1802**] for controlling the additive intensity [**1842**] of the first visible-light emissions [**1814**], [**1815**]; and the second plurality of semiconductor light-emitting devices [**1818**], [**1820**], [**1822**] of the second visible-light source [**1816**] for controlling the additive intensity [**1844**] of the second visible-light emissions [**1826**], [**1827**].

In some examples [**1700**] of the lighting controller, the control system [**1702**] may include the first control facility [**1704**] being coupled as represented by a dashed line [**1714**] with the first visible-light source [**1802**] for controlling the first intensity [**1828**] of the first beam [**1812**] of the first visible-light emissions [**1814**], [**1815**]; and the control system [**1702**] may further include the second control facility [**1706**] being coupled as represented by a dashed line [**1716**] with the second visible-light source [**1816**] for controlling the second intensity [**1830**] of the second beam [**1824**] of the second visible-light emissions [**1826**], [**1827**].

In other examples [**1700**] of the lighting controller, the control system [**1702**] may include the first control facility [**1704**] as being for controlling the first visible-light source [**1802**] with the first plurality of semiconductor light-emitting devices [**1804**], [**1806**], [**1808**] being collectively configured for generating the first visible-light emissions [**1814**], [**1815**] as having a selectable first perceived color point [**1812**]; and the control system [**1702**] may include the second control facility [**1706**] as being for controlling the second visible-light source [**1816**] with the second plurality of semiconductor light-emitting devices [**1818**], [**1820**], [**1822**] being collectively configured for generating the second visible-light emissions [**1826**], [**1827**] as having a selectable second perceived color point [**1824**].

In further examples [**1700**] of the lighting controller, the control system [**1702**] may include the first control facility [**1704**] as being for controlling the first visible-light source [**1802**] with the first plurality of semiconductor light-emitting devices [**1804**], [**1806**], [**1808**] being collectively configured for generating the first visible-light emissions [**1814**], [**1815**] as having a selectable first perceived color point [**1812**], wherein a plurality of individual ones among the first plurality of semiconductor light-emitting devices [**1804**], [**1806**], [**1808**] may each emit visible-light having a different color point. Additionally in those examples [**1700**] of the lighting controller, the control system [**1702**] may include the second control facility [**1706**] as being for controlling the second visible-light source [**1816**] with the second plurality of semiconductor light-emitting devices [**1818**], [**1820**], [**1822**] being collectively configured for generating the second visible-light emissions [**1826**], [**1827**] as having a selectable second perceived color point [**1824**], wherein a plurality of individual ones among the second plurality of semiconductor light-emitting devices [**1818**], [**1820**], [**1822**] may each emit visible-light having a different color point.

FIGS. **17-21** also illustrate an example [**1800**] of an implementation of a lighting system. In some examples, the lighting system [**1800**] may include: the first visible-light source [**1802**]; and the second visible-light source [**1816**]; and the example [**1700**] of the lighting controller. In the example [**1800**] of the lighting system, the lighting controller [**1700**] may include the control system [**1702**]. Further in the example [**1800**] of the lighting system, the control system [**1702**] may include the first control facility [**1704**] and the second control facility [**1706**]. Additionally in the example [**1800**] of the lighting system, the first control facility [**1704**] may be coupled as represented by a dashed line [**1714**] with the first visible-light source [**1802**] for controlling the first intensity [**1828**] of the first beam [**1812**] of the first visible-light emissions [**1814**], [**1815**]. Further in the example [**1800**] of the lighting system, the second control facility [**1706**] may be coupled as represented by a dashed line [**1716**] with the second visible-light source [**1816**] for controlling the second intensity [**1830**] of the second beam [**1824**] of the second visible-light emissions [**1826**], [**1827**]. In the example [**1800**] of the lighting system, the first control facility [**1704**] may be for controlling the first visible-light source [**1802**] as including a first plurality of semiconductor light-emitting devices [**1804**], [**1806**], [**1808**] being spaced apart from and along a longitudinal axis [**1810**], the first visible-light source [**1802**] being positioned for directing a first beam [**1812**] of first visible-light emissions being represented by arrows [**1814**], [**1815**] from the first plurality of semiconductor light-emitting devices [**1804**], [**1806**], [**1808**] in a first beam direction also represented by the arrows [**1814**], [**1815**]. In the example [**1800**] of the lighting system, the second control facility [**1706**] may be for controlling a second visible-light source [**1816**] including a second plurality of semiconductor light-emitting devices [**1818**], [**1820**], [**1822**] being spaced apart from and along the longitudinal axis [**1810**], the second visible-light source [**1816**] being positioned for directing a second beam [**1824**] of second visible-light emissions being represented by arrows [**1826**], [**1827**] from the second plurality of semiconductor light-emitting devices [**1818**], [**1820**], [**1822**] in a second beam direction also being represented by the arrows [**1826**], [**1827**]. In some examples [**1800**] of the lighting system, the first visible-light source [**1802**] may include the first plurality of semiconductor light-emitting devices [**1804**], [**1806**], [**1808**] as being arranged in a first string as shown in FIG. **18**; and the second visible-light source [**1816**] may include the second plurality of semiconductor light-emitting devices [**1818**], [**1820**], [**1822**] as being arranged in a second string also shown in FIG. **18**; and the first and second strings may generally be mutually parallel. In other examples [**1800**] of the lighting system (not shown), the first and second strings may generally oriented as not being mutually parallel.

In the example [**1800**] of the lighting system, the first control facility [**1704**] may be programmed for controlling a first intensity being represented by an arrow [**1828**] of the first beam [**1812**] of the first visible-light emissions [**1814**], [**1815**], and the second control facility [**1706**] may be programmed for controlling a second intensity being represented by an arrow [**1830**] of the second beam [**1824**] of the second visible light emissions [**1826**], [**1827**]. In the example [**1800**] of the lighting system, the control system [**1702**] may be programmed for modulating the first intensity [**1828**] of the first beam [**1812**] and the second intensity

[1830] of the second beam [1824] in a manner for causing the first and second beams [1812], [1824] of the first and second visible-light emissions [1814], [1815], [1826], [1827] to collectively emulate a progression of ambient sunlight being represented by an arrow [1832].

FIG. 22 is a schematic diagram of an example [2200] of a lighting controller. FIG. 23 is a schematic bottom perspective view showing an example [2300] of an implementation of a lighting system together with which the example [2200] of the lighting controller may be utilized. FIG. 24 is a schematic cross-sectional view taken along the line 24-24 showing the example [2300] of the lighting system together with which the example [2200] of the lighting controller may be utilized. FIG. 25 is a schematic cross-sectional view taken along the line 25-25 showing the example [2300] of the lighting system together with which the example [2200] of the lighting controller may be utilized. FIG. 26 is a schematic top perspective view taken along the line 26 showing the example [2300] of an implementation of a lighting system together with which the example [2200] of the lighting controller may be utilized.

Examples [1700], [2200], [2700], [3200], and [3300] of lighting controllers are discussed herein, respectively, in connection with FIGS. 17-21; 22-26; 27-31; 32, 1-4; and 33, 9-12. Examples [3400], [3500], [3600] of lighting control methods are discussed herein, respectively, in connection with FIGS. 34, 17-21; 35, 22-26; and 36, 27-31. Examples [100], [500], [900], [1300], [1800], [2300], [2800], [3700], [4000] of lighting systems that may be utilized together with the example [2200] of the lighting controllers are discussed herein, respectively, in connection with FIGS. 1-4; 5-8; 9-12; 13-16; 18-21; 22-26; 27-31; 37-39; and 40-42. It is understood throughout this specification that each one of the examples [1700], [2200], [2700], [3200], [3300] of the lighting controllers may be utilized together with a lighting system [100], [500], [900], [1300], [1800], [2300], [2800], [3700], [4000] including any of the features or combinations of features that are disclosed in connection with any one or more of such lighting systems. It is further understood throughout this specification that each one of the examples [3400], [3500], [3600] of the lighting control methods may be utilized together with any of the examples [1700], [2200], [2700], [3200], [3300] of the lighting controllers, for controlling a lighting system [100], [500], [900], [1300], [1800], [2300], [2800], [3700], [4000] including any of the features or combinations of features that are disclosed in connection with any one or more of such lighting systems. It is additionally understood throughout this specification that a lighting system [100], [500], [900], [1300], [1800], [2300], [2800], [3700], [4000] may include any of the features or combinations of features that are disclosed in connection with any one or more of such lighting systems. Accordingly, FIGS. 1-42 and the entireties of the discussions of the examples [100], [500], [900], [1300], [1800], [2300], [2800], [3700], [4000] of lighting systems and the entireties of the discussions of the examples [1700], [2200], [2700], [3200], [3300] of the lighting controllers and the entireties of the discussions of the examples [3400], [3500], [3600] of lighting control methods are hereby incorporated into the following discussions of the example [2200] of an implementation of the lighting controller and of the example [2300] of the lighting system.

As shown in FIGS. 22-26, the example [2200] of the implementation of the lighting controller includes a control system [2202] including a first control facility [2204] and a second control facility [2206] and a third control facility [2207]. In the example [2200] of the lighting controller, the first control facility [2204] is for controlling a first visible-light source [2302] including a first plurality of semiconductor light-emitting devices [2304], [2306], [2308] being spaced apart from and along a longitudinal axis [2310], the first visible-light source [2302] being positioned for directing a first beam [2312] of first visible-light emissions being represented by arrows [2314], [2315] from the first plurality of semiconductor light-emitting devices [2304], [2306], [2308] in a first beam direction also represented by the arrows [2314], [2315]. In the example [2200] of the lighting controller, the second control facility [2206] is for controlling a second visible-light source [2316] including a second plurality of semiconductor light-emitting devices [2318], [2320], [2322] being spaced apart from and along the longitudinal axis [2310], the second visible-light source [2316] being positioned for directing a second beam [2324] of second visible-light emissions being represented by arrows [2326], [2327] from the second plurality of semiconductor light-emitting devices [2318], [2320], [2322] in a second beam direction also being represented by the arrows [2326], [2327]. In the example [2200] of the lighting controller, the third control facility [2207] is for controlling a third visible-light source [2317] including a third plurality of semiconductor light-emitting devices [2319], [2321], [2323] being spaced apart from and along the longitudinal axis [2310], the third visible-light source [2317] being positioned for directing a third beam [2325] of third visible-light emissions being represented by arrows [2329], [2331] from the third plurality of semiconductor light-emitting devices [2319], [2321], [2323] in a third beam direction also being represented by the arrows [2329], [2331]. In the example [2200] of the lighting controller, the first control facility [2204] is programmed for controlling a first intensity being represented by an arrow [2328] of the first beam [2312] of the first visible-light emissions [2314], [2315], and the second control facility [2206] is programmed for controlling a second intensity being represented by an arrow [2330] of the second beam [2324] of the second visible light emissions [2326], [2327]; and the third control facility [2207] is programmed for controlling a third intensity being represented by an arrow [2333] of the third beam [2325] of the third visible light emissions [2329], [2331]. In the example [2200] of the lighting controller, the control system [2202] is programmed for modulating the first intensity [2328] of the first beam [2312] and the second intensity [2330] of the second beam [2324] and the third intensity [2333] of the third beam [2325] in a manner for causing the first and second and third beams [2312], [2324], [2325] of the first and second and third visible-light emissions [2314], [2315], [2326], [2327], [2329], [2331] to collectively emulate a progression of ambient sunlight being represented by an arrow [2332].

In some examples [2200] of the lighting controller, the control system [2202] may be programmed for causing the first and second and third beams [2312], [2324], [2325] to collectively emulate the progression [2332] of ambient sunlight by initially modulating the first intensity [2328] of the first beam [2312] to relatively be substantially greater than the third intensity [2333] of the third beam [2325] while modulating the third intensity [2333] of the third beam [2325] to relatively be substantially greater than the second intensity [2330] of the second beam [2324], and by then gradually modulating the second intensity [2330] of the second beam [2324] to relatively become substantially greater than the third intensity [2333] of the third beam [2325] while gradually modulating the third intensity [2333] of the third beam [2325] to relatively become substantially

greater than the first intensity [2328] of the first beam [2312]. In other examples [2200] of the lighting controller, the control system [2202] may be programmed for causing two of the beams among the first and second and third beams [2312], [2324], [2325] to together emulate the progression [2332] of ambient sunlight by initially modulating an intensity [2328], [2330], [2333] of a one of the beams [2312], [2324], [2325] to relatively be substantially greater than another intensity[2328], [2330], [2333] of another one of the beams [2312], [2324], [2325], and by then gradually modulating the another intensity [2328], [2330], [2333] of the another one of the beams [2312], [2324], [2325] to relatively become substantially greater than the intensity [2328], [2330], [2333] of the one of the beams [2312], [2324], [2325].

In some examples [2200] of the lighting controller, the control system [2202] may regulate a distribution of a variable power input to: the first plurality of semiconductor light-emitting devices [2304], [2306], [2308] of the first visible-light source [2302] for controlling the intensity [2328] of the first visible-light emissions [2314], [2315]; and the second plurality of semiconductor light-emitting devices [2318], [2320], [2322] of the second visible-light source [2316] for controlling the intensity [2330] of the second visible-light emissions [2326], [2327]; and the third plurality of semiconductor light-emitting devices [2319], [2321], [2323] of the third visible-light source [2317] for controlling the intensity [2333] of the third visible-light emissions [2329], [2331].

In other examples [2200] of the lighting controller, a one of the control facilities [2204], [2206], [2207] may be omitted; and a corresponding one of the visible-light sources [2302], [2316], [2317] may likewise be omitted. In further examples [2200] of the lighting controller, the control system [2202] may include one or more control facilities (not shown) in addition to the first control facility [2204] and the second control facility [2206] and the third control facility [2207]; and one or more visible-light sources in addition to the first visible-light source [2302] and the second visible-light source [2316] and the third visible-light source [2317] may be provided.

In further examples [2200] of the lighting controller, the control system [2202] may be programmed for facilitating an alignment being represented by arrows [2402], [2404] of the first beam [2312] towards a first boundary represented by a dashed line [B1] of an ambient space represented by a dashed box [S] and for facilitating another alignment being represented by arrows [2406], [2408] of the second beam [2324] towards a second boundary represented by a dashed line [B2] of the ambient space [S] being opposite to the first boundary [B1]. In some of those examples [2200] of the lighting controller, the control system [2202] may be programmed for facilitating the alignment [2402], [2404] of the first beam [2312] as being towards the first boundary [B1] of the ambient space [S] and for facilitating the alignment [2406], [2408] of the second beam [2324] as being towards the second boundary [B2] of the ambient space [S], with each of the first and second beams [2312], [2324] being respectively aligned toward the boundaries [B1] and [B2] as being spaced apart from and on opposite sides of a vertical dashed line [2410] intersecting the longitudinal axis [2310]. In further examples [2200] of the lighting controller, the control system [2202] may be programmed for facilitating an alignment being represented by arrows [2411], [2413] of the third beam [2325] being along the vertical dashed line [2410] or being in another direction between the alignment [2402], [2404] and the alignment [2406], [2408]. As additional examples [2200] of the lighting controller, the control system [2202] may include an indicator [2208] for facilitating an alignment being represented by the arrows [2402], [2404] of the first beam [2312] towards the first boundary [B1] of the ambient space [S] and for facilitating another alignment being represented by the arrows [2406], [2408] of the second beam [2324] towards the second boundary [B2] of the ambient space [S] being opposite to the first boundary [B1]. In some examples [2200] of the lighting controller, the control system [2202] may be programmed for facilitating an alignment being represented by arrows [2402], [2404] of the first beam [2312] towards an Eastward direction being represented by an arrow [2412] and for facilitating another alignment being represented by arrows [2406], [2408] of the second beam [2324] towards a Westward direction being represented by an arrow [2414]. In further examples [2200] of the lighting controller, the control system [2202] may provide the indicator [2208] as being for facilitating an alignment being represented by arrows [2402], [2404] of the first beam [2312] towards an Eastward direction being represented by the arrow [2412] and for facilitating another alignment being represented by arrows [2406], [2408] of the second beam [2324] towards a Westward direction being represented by the arrow [2414].

In some examples [2200] of the lighting controller, the control system [2202] may be programmed for modulating the first intensity [2328] of the first beam [2312] and the second intensity [2330] of the second beam [2324] and the third intensity [2333] of the third beam [2325] in a manner for causing the first and second and third beams [2312], [2324], [2325] of the first and second and third visible-light emissions [2314], [2315], [2326], [2327], [2329], [2331] to collectively emulate the progression of ambient sunlight [2332] through a portion of a cycle extending from sunrise being represented by a line [2334] to sunset being represented by a line [2336]; or through a period beginning before sunrise; or through a period ending after sunset; or through a period both beginning before sunrise and ending after sunset. In some examples [2200] of the lighting controller, the control system [2202] may be programmed for modulating the first intensity [2328] of the first beam [2312] and the second intensity [2330] of the second beam [2324] and the third intensity [2333] of the third beam [2325] in a manner for causing the first and second and third beams [2312], [2324], [2325] of the first and second and third visible-light emissions [2314], [2315], [2326], [2327], [2329], [2331] to collectively emulate the progression of ambient sunlight [2332] throughout the cycle extending from sunrise being represented by the line [2334] to sunset being represented by the line [2336]. In further examples [2200] of the lighting controller, the control system [2202] may be programmed for modulating the first intensity [2328] of the first beam [2312] and the second intensity [2330] of the second beam [2324] and the third intensity [2333] of the third beam [2325] in a manner for causing the first and second and third beams [2312], [2324], [2325] of the first and second and third visible-light emissions [2314], [2315], [2326], [2327], [2329], [2331] to collectively initiate an emulation of the progression of ambient sunlight [2332] when a local sunrise occurs as represented by the line [2334] and to collectively conclude the emulation when a corresponding local sunset occurs as represented by the line [2336]. In some of those examples [2200] of the lighting controller, the control system [2202] may include an ambient light sensor [2210] being programmed for sensing an occurrence of the local sunrise [2334] or an occurrence of the local sunset [2336]. In other examples [2200] of the

lighting controller, the control system [2202] may include a programmable user interface [2212] enabling an arbitrary selection of a simulated sunrise time [2334] and a simulated sunset time [2336].

In further examples [2200] of the lighting controller, the control system [2202] may be programmed for modulating the first intensity [2328] of the first beam [2312] and the second intensity [2330] of the second beam [2324] with a maximum ratio of the first intensity [2328] divided by the second intensity [2330] or of the second intensity [2330] divided by the first intensity [2328] being at least about 10:1. In additional examples [2200] of the lighting controller, the control system [2202] may be programmed for modulating the first intensity [2328] of the first beam [2312] and the second intensity [2330] of the second beam [2324] with a maximum ratio of the first intensity [2328] divided by the second intensity [2330] or of the second intensity [2330] divided by the first intensity [2328] being at least about 100:1. Also in these examples [2200] of the lighting controller, the control system [2202] may be programmed for modulating the third intensity [2333] of the third beam [2325] as being in between the first intensity [2328] and the second intensity [2330].

In some examples [2200] of the lighting controller, the control system [2202] may be programmed for modulating the first intensity [2328] of the first beam [2312] in a first range, and for modulating the second intensity [2330] of the second beam [2324] in a second range, and for modulating the third intensity [2333] of the third beam [2325] in a third range, in a manner for causing the first and second and third beams [2312], [2324], [2325] of the first and second and third visible-light emissions [2314], [2315], [2326], [2327], [2329], [2331] to collectively emulate the progression of ambient sunlight [2332]. In further examples [2200] of the lighting controller, the control system [2202] may be programmed for controlling the first beam [2312] of the first visible-light emissions [2314], [2315] as having a first baseline intensity being represented by an arrow [2338] and for controlling the second beam [2324] of the second visible-light emissions [2326], [2327] as having a second baseline intensity being represented by an arrow [2340] and for controlling the third beam [2325] of the third visible-light emissions [2329], [2331] as having a third baseline intensity being represented by an arrow [2341]; and the control system [2202] may be programmed for modulating the first intensity [2328] of the first beam [2312] in a first range [2342] being additive to the first baseline intensity [2338] and for modulating the second intensity [2330] of the second beam [2324] in a second range [2344] being additive to the second baseline intensity [2340] and for modulating the third intensity [2333] of the third beam [2325] in a third range [2343] being additive to the third baseline intensity [2341], in the manner for causing the first and second and third beams [2312], [2324], [2325] of the first and second and third visible-light emissions [2314], [2315], [2326], [2327], [2329], [2331] to collectively emulate the progression of ambient sunlight [2332]. In additional examples [2200] of the lighting controller, the control system [2202] may be programmed for controlling the first baseline intensity [2338] and the second baseline intensity [2340] and the third baseline intensity [2341] for causing the first beam [2312] and the second beam [2324] and the third beam [2325] to collectively form a pre-set baseline pattern of the first and second and third visible-light emissions [2314], [2315], [2326], [2327], [2329], [2331]. As examples [2200] of the lighting controller, the control system [2202] may be programmed for selection among a plurality of different pre-programmed combinations of the baseline intensities [2338], [2340], [2341] for the first visible-light emissions [2314], [2315], the second visible-light emissions [2326], [2327], and the third visible-light emissions [2329], [2331]. In some of those examples [2200] of the lighting controller, the control system [2202] may be programmed for controlling the first baseline intensity [2338] and the second baseline intensity [2340] and the third baseline intensity [2341] for causing the first beam [2312] and the second beam [2324] and the third beam [2325] to collectively form a pre-set baseline pattern of the first and second and third visible-light emissions [2314], [2315], [2326], [2327], [2329], [2331] being: center wall graze; table with wall-fill; wall wash right; wall wash left; double wall wash; wall wash right plus floor; wall wash left plus floor; room; or batwing. In examples [2200] of the lighting controller, the control system [2202] may cause the first beam [2312] and the second beam [2324] and the third beam [2325] to respectively have the following baseline intensities [2338]/[2340]/[2341] collectively constituting one hundred percent of a variable baseline power input of the control system [2202] in order to form the following pre-set baseline patterns of the first and second and third visible-light emissions [2314], [2315], [2326], [2327], [2329], [2331]: center wall graze [0/100/0]; table with wall-fill [17/66/17]; wall wash right [0/0/100]; wall wash left [100/0/0]; double wall wash [50/0/50]; wall wash right plus floor [0/33/67]; wall wash left plus floor [67/33/0]; low-glare room lighter [33/34/33]; or low glare quasi-batwing [40/20/40].

In some examples [2200] of the lighting controller, the control system [2202] may regulate a distribution of a variable baseline power input to: the first plurality of semiconductor light-emitting devices [2304], [2306], [2308] of the first visible-light source [2302] for controlling the baseline intensity [2338] of the first visible-light emissions [2314], [2315]; and the second plurality of semiconductor light-emitting devices [2318], [2320], [2322] of the second visible-light source [2316] for controlling the baseline intensity [2340] of the second visible-light emissions [2326], [2327]; and the third plurality of semiconductor light-emitting devices [2319], [2321], [2323] of the third visible-light source [2317] for controlling the baseline intensity [2341] of the third visible-light emissions [2329], [2331]. Further in those examples [2200] of the lighting controller, the control system [2202] may regulate a distribution of a variable additive power input to: the first plurality of semiconductor light-emitting devices [2304], [2306], [2308] of the first visible-light source [2302] for controlling the additive intensity [2342] of the first visible-light emissions [2314], [2315]; and the second plurality of semiconductor light-emitting devices [2318], [2320], [2322] of the second visible-light source [2316] for controlling the additive intensity [2344] of the second visible-light emissions [2326], [2327]; and the third plurality of semiconductor light-emitting devices [2319], [2321], [2323] of the third visible-light source [2317] for controlling the additive intensity [2343] of the third visible-light emissions [2329], [2331].

In further examples [2200] of the lighting controller, the control system [2202] may be programmed for transitioning, over a selectable time period, the baseline intensities [2338], [2340], [2341] for the first visible-light emissions [2314], [2315], the second visible-light emissions [2326], [2327], and the third visible-light emissions [2329], [2331] from a one of the plurality of pre-programmed combinations to another one of the plurality of pre-programmed combinations.

In some examples [2200] of the lighting controller, the control system [2202] may include the first control facility [2204] being coupled as represented by a dashed line [2214] with the first visible-light source [2302] for controlling the first intensity [2328] of the first beam [2312] of the first visible-light emissions [2314], [2315]; and the control system [2202] may further include the second control facility [2206] being coupled as represented by a dashed line [2216] with the second visible-light source [2316] for controlling the second intensity [2330] of the second beam [2324] of the second visible-light emissions [2326], [2327]; and the control system [2202] may further include the third control facility [2207] being coupled as represented by a dashed line [2218] with the third visible-light source [2317] for controlling the third intensity [2333] of the third beam [2325] of the third visible-light emissions [2329], [2331].

In other examples [2200] of the lighting controller, the control system [2202] may include the first control facility [2204] as being for controlling the first visible-light source [2302] with the first plurality of semiconductor light-emitting devices [2304], [2306], [2308] being collectively configured for generating the first visible-light emissions [2314], [2315] as having a selectable first perceived color point [2312]; and the control system [2202] may include the second control facility [2206] as being for controlling the second visible-light source [2316] with the second plurality of semiconductor light-emitting devices [2318], [2320], [2322] being collectively configured for generating the second visible-light emissions [2326], [2327] as having a selectable second perceived color point [2324]; and the control system [2202] may include the third control facility [2207] as being for controlling the third visible-light source [2317] with the third plurality of semiconductor light-emitting devices [2319], [2321], [2323] being collectively configured for generating the third visible-light emissions [2329], [2331] as having a selectable third perceived color point [2325].

In further examples [2200] of the lighting controller, the control system [2202] may include the first control facility [2204] as being for controlling the first visible-light source [2302] with the first plurality of semiconductor light-emitting devices [2304], [2306], [2308] being collectively configured for generating the first visible-light emissions [2314], [2315] as having a selectable first perceived color point [2312], wherein a plurality of individual ones among the first plurality of semiconductor light-emitting devices [2304], [2306], [2308] may each emit visible-light having a different color point. Additionally in those examples [2200] of the lighting controller, the control system [2202] may include the second control facility [2206] as being for controlling the second visible-light source [2316] with the second plurality of semiconductor light-emitting devices [2318], [2320], [2322] being collectively configured for generating the second visible-light emissions [2326], [2327] as having a selectable second perceived color point [2324], wherein a plurality of individual ones among the second plurality of semiconductor light-emitting devices [2318], [2320], [2322] may each emit visible-light having a different color point. Further in those examples [2200] of the lighting controller, the control system [2202] may include the third control facility [2207] as being for controlling the third visible-light source [2317] with the third plurality of semiconductor light-emitting devices [2319], [2321], [2323] being collectively configured for generating the third visible-light emissions [2329], [2331] as having a selectable third perceived color point [2325], wherein a plurality of individual ones among the third plurality of semiconductor light-emitting devices [2319], [2321], [2323] may each emit visible-light having a different color point.

FIGS. 22-26 further illustrate an example [2300] of an implementation of a lighting system. In some examples, the lighting system [2300] may include: the first visible-light source [2302]; and the second visible-light source [2316]; and the third visible-light source [2317]; and the example [2200] of the lighting controller. In the example [2300] of the lighting system, the lighting controller [2200] may include the control system [2202]. Further in the example [2300] of the lighting system, the control system [2202] may include the first control facility [2204] and the second control facility [2206] and the third control facility [2207]. Additionally in the example [2300] of the lighting system, the first control facility [2204] may be coupled as represented by a dashed line [2214] with the first visible-light source [2302] for controlling the first intensity [2328] of the first beam [2312] of the first visible-light emissions [2314], [2315]. Further in the example [2300] of the lighting system, the second control facility [2206] may be coupled as represented by a dashed line [2216] with the second visible-light source [2316] for controlling the second intensity [2330] of the second beam [2324] of the second visible-light emissions [2326], [2327]. Additionally in the example [2300] of the lighting system, the third control facility [2207] may be coupled as represented by a dashed line [2218] with the third visible-light source [2317] for controlling the third intensity [2333] of the third beam [2325] of the third visible-light emissions [2329], [2331]. In the example [2300] of the lighting system, the first control facility [2204] may be for controlling the first visible-light source [2302] as including a first plurality of semiconductor light-emitting devices [2304], [2306], [2308] being spaced apart from and along a longitudinal axis [2310], the first visible-light source [2302] being positioned for directing a first beam [2312] of first visible-light emissions being represented by arrows [2314], [2315] from the first plurality of semiconductor light-emitting devices [2304], [2306], [2308] in a first beam direction also represented by the arrows [2314], [2315]. In the example [2300] of the lighting system, the second control facility [2206] may be for controlling a second visible-light source [2316] including a second plurality of semiconductor light-emitting devices [2318], [2320], [2322] being spaced apart from and along the longitudinal axis [2310], the second visible-light source [2316] being positioned for directing a second beam [2324] of second visible-light emissions being represented by arrows [2326], [2327] from the second plurality of semiconductor light-emitting devices [2318], [2320], [2322] in a second beam direction also being represented by the arrows [2326], [2327]. In the example [2300] of the lighting system, the third control facility [2207] may be for controlling a third visible-light source [2317] including a third plurality of semiconductor light-emitting devices [2319], [2321], [2323] being spaced apart from and along the longitudinal axis [2310], the third visible-light source [2317] being positioned for directing a third beam [2325] of third visible-light emissions being represented by arrows [2329], [2331] from the third plurality of semiconductor light-emitting devices [2319], [2321], [2323] in a third beam direction also being represented by the arrows [2329], [2331]. In some examples [2300] of the lighting system, the first visible-light source [2302] may include the first plurality of semiconductor light-emitting devices [2304], [2306], [2308] as being arranged in a first string as shown in FIG. 23; and the second visible-light source [2316] may include the second plurality of semiconductor light-emitting devices [2318], [2320], [2322] as being

arranged in a second string also shown in FIG. **23**; and the third visible-light source [**2317**] may include the third plurality of semiconductor light-emitting devices [**2319**], [**2321**], [**2323**] as being arranged in a third string also shown in FIG. **23**; and the first and second and third strings may generally be mutually parallel. In other examples [**2300**] of the lighting system (not shown), the first and second and third strings may generally oriented as not being mutually parallel.

In the example [**2300**] of the lighting system, the first control facility [**2204**] may be programmed for controlling a first intensity being represented by an arrow [**2328**] of the first beam [**2312**] of the first visible-light emissions [**2314**], [**2315**], and the second control facility [**2206**] may be programmed for controlling a second intensity being represented by an arrow [**2330**] of the second beam [**2324**] of the second visible light emissions [**2326**], [**2327**] and the third control facility [**2207**] may be programmed for controlling a third intensity being represented by an arrow [**2333**] of the third beam [**2325**] of the third visible light emissions [**2329**], [**2331**]. In the example [**2300**] of the lighting system, the control system [**2202**] may be programmed for modulating the first intensity [**2328**] of the first beam [**2312**] and the second intensity [**2330**] of the second beam [**2324**] and the third intensity [**2333**] of the third beam [**2325**] in a manner for causing the first and second and third beams [**2312**], [**2324**], [**2325**] of the first and second and third visible-light emissions [**2314**], [**2315**], [**2326**], [**2327**], [**2329**], [**2331**] to collectively emulate a progression of ambient sunlight being represented by an arrow [**2332**].

FIG. **27** is a schematic diagram of an example [**2700**] of a lighting controller. FIG. **28** is a schematic bottom perspective view showing an example [**2800**] of an implementation of a lighting system together with which the example [**2700**] of the lighting controller may be utilized. FIG. **29** is a schematic cross-sectional view taken along the line **29-29** showing the example [**2800**] of the lighting system together with which the example [**2700**] of the lighting controller may be utilized. FIG. **30** is a schematic cross-sectional view taken along the line **30-30** showing the example [**2800**] of the lighting system together with which the example [**2700**] of the lighting controller may be utilized. FIG. **31** is a schematic top perspective view taken along the line **31** showing the example [**2800**] of an implementation of a lighting system together with which the example [**2700**] of the lighting controller may be utilized.

Examples [**1700**], [**2200**], [**2700**], [**3200**], and [**3300**] of lighting controllers are discussed herein, respectively, in connection with FIGS. **17-21**; **22-26**; **27-31**; **32**, **1-4**; and **33**, **9-12**. Examples [**3400**], [**3500**], [**3600**] of lighting control methods are discussed herein, respectively, in connection with FIGS. **34**, **17-21**; **35**, **22-26**; and **36**, **27-31**. Examples [**100**], [**500**], [**900**], [**1300**], [**1800**], [**2300**], [**2800**], [**3700**], [**4000**] of lighting systems that may be utilized together with the example [**2700**] of the lighting controllers are discussed herein, respectively, in connection with FIGS. **1-4**; **5-8**; **9-12**; **13-16**; **18-21**; **22-26**; **27-31**; **37-39**; and **40-42**. It is understood throughout this specification that each one of the examples [**1700**], [**2200**], [**2700**], [**3200**], [**3300**] of the lighting controllers may be utilized together with a lighting system [**100**], [**500**], [**900**], [**1300**], [**1800**], [**2300**], [**2800**], [**3700**], [**4000**] including any of the features or combinations of features that are disclosed in connection with any one or more of such lighting systems. It is further understood throughout this specification that each one of the examples [**3400**], [**3500**], [**3600**] of the lighting control methods may be utilized together with any of the examples [**1700**], [**2200**], [**2700**], [**3200**], [**3300**] of the lighting controllers, for controlling a lighting system [**100**], [**500**], [**900**], [**1300**], [**1800**], [**2300**], [**2800**], [**3700**], [**4000**] including any of the features or combinations of features that are disclosed in connection with any one or more of such lighting systems. It is additionally understood throughout this specification that a lighting system [**100**], [**500**], [**900**], [**1300**], [**1800**], [**2300**], [**2800**], [**3700**], [**4000**] may include any of the features or combinations of features that are disclosed in connection with any one or more of such lighting systems. Accordingly, FIGS. **1-42** and the entireties of the discussions of the examples [**100**], [**500**], [**900**], [**1300**], [**1800**], [**2300**], [**2800**], [**3700**], [**4000**] of lighting systems and the entireties of the discussions of the examples [**1700**], [**2200**], [**2700**], [**3200**], [**3300**] of the lighting controllers and the entireties of the discussions of the examples [**3400**], [**3500**], [**3600**] of lighting control methods are hereby incorporated into the following discussions of the example [**2700**] of an implementation of the lighting controller and of the example [**2800**] of the lighting system.

As shown in FIGS. **27-31**, the example [**2700**] of the implementation of the lighting controller includes a control system [**2702**] including a first control facility [**2704**] and a second control facility [**2706**] and a third control facility [**2707**]. In the example [**2700**] of the lighting controller, the first control facility [**2704**] is for controlling a first visible-light source [**2802**] including a first plurality of semiconductor light-emitting devices [**2804**], [**2806**], [**2808**] being spaced apart from and along a longitudinal axis [**2810**], the first visible-light source [**2802**] being positioned for directing a first beam [**2812**] of first visible-light emissions being represented by arrows [**2814**], [**2815**] from the first plurality of semiconductor light-emitting devices [**2804**], [**2806**], [**2808**] in a first beam direction also represented by the arrows [**2814**], [**2815**]. In the example [**2700**] of the lighting controller, the second control facility [**2706**] is for controlling a second visible-light source [**2816**] including a second plurality of semiconductor light-emitting devices [**2818**], [**2820**], [**2822**] being spaced apart from and along the longitudinal axis [**2810**], the second visible-light source [**2816**] being positioned for directing a second beam [**2824**] of second visible-light emissions being represented by arrows [**2826**], [**2827**] from the second plurality of semiconductor light-emitting devices [**2818**], [**2820**], [**2822**] in a second beam direction also being represented by the arrows [**2826**], [**2827**]. In the example [**2700**] of the lighting controller, the third control facility [**2707**] is for controlling a third visible-light source [**2817**] including a third plurality of semiconductor light-emitting devices [**2819**], [**2821**], [**2823**] being spaced apart from and along the longitudinal axis [**2810**], the third visible-light source [**2817**] being positioned for directing a third beam [**2825**] of third visible-light emissions being represented by arrows [**2829**], [**2831**] from the third plurality of semiconductor light-emitting devices [**2819**], [**2821**], [**2823**] in a third beam direction also being represented by the arrows [**2829**], [**2831**]. In the example [**2700**] of the lighting controller, the first control facility [**2704**] is programmed for controlling a first intensity being represented by an arrow [**2828**] of the first beam [**2812**] of the first visible-light emissions [**2814**], [**2815**], and the second control facility [**2706**] is programmed for controlling a second intensity being represented by an arrow [**2830**] of the second beam [**2824**] of the second visible light emissions [**2826**], [**2827**]; and the third control facility [**2707**] is programmed for controlling a third intensity being represented by an arrow [**2833**] of the third beam [**2825**] of the third visible light emissions [**2829**], [**2831**]. In the example

[2700] of the lighting controller, the control system [2702] is programmed for modulating the first intensity [2828] of the first beam [2812] and the second intensity [2830] of the second beam [2824] and the third intensity [2833] of the third beam [2825] in a manner for causing the first and second and third beams [2812], [2824], [2825] of the first and second and third visible-light emissions [2814], [2815], [2826], [2827], [2829], [2831] to collectively emulate a progression of ambient sunlight being represented by an arrow [2832].

In some examples [2700] of the lighting controller, the control system [2702] may be programmed for causing the first and second and third beams [2812], [2824], [2825] to collectively emulate the progression [2832] of ambient sunlight by initially modulating the first intensity [2828] of the first beam [2812] to relatively be substantially greater than the third intensity [2833] of the third beam [2825] while modulating the third intensity [2833] of the third beam [2825] to relatively be substantially greater than the second intensity [2830] of the second beam [2824], and by then gradually modulating the second intensity [2830] of the second beam [2824] to relatively become substantially greater than the third intensity [2833] of the third beam [2825] while gradually modulating the third intensity [2833] of the third beam [2825] to relatively become substantially greater than the first intensity [2828] of the first beam [2812]. In other examples [2700] of the lighting controller, the control system [2702] may be programmed for causing two of the beams [2812], [2824], [2825] among the first and second and third beams [2812], [2824], [2825] to together emulate the progression [2832] of ambient sunlight by initially modulating an intensity [2828], [2830], [2833] of a one of the beams [2812], [2824], [2825] to relatively be substantially greater than another intensity [2828], [2830], [2833] of another one of the beams [2812], [2824], [2825], and by then gradually modulating the another intensity [2828], [2830], [2833] of the another one of the beams [2812], [2824], [2825] to relatively become substantially greater than the intensity [2828], [2830], [2833] of the one of the beams [2812], [2824], [2825].

In some examples [2700] of the lighting controller, the control system [2702] may regulate a distribution of a variable power input to: the first plurality of semiconductor light-emitting devices [2804], [2806], [2808] of the first visible-light source [2802] for controlling the intensity [2828] of the first visible-light emissions [2814], [2815]; and the second plurality of semiconductor light-emitting devices [2818], [2820], [2822] of the second visible-light source [2816] for controlling the intensity [2830] of the second visible-light emissions [2826], [2827]; and the third plurality of semiconductor light-emitting devices [2819], [2821], [2823] of the third visible-light source [2817] for controlling the intensity [2833] of the third visible-light emissions [2829], [2831].

In other examples [2700] of the lighting controller, a one of the control facilities [2704], [2706], [2707] may be omitted; and a corresponding one of the visible-light sources [2802], [2816], [2817] may likewise be omitted. In further examples [2700] of the lighting controller, the control system [2702] may include one or more control facilities (not shown) in addition to the first control facility [2704] and the second control facility [2706] and the third control facility [2707]; and one or more visible-light sources in addition to the first visible-light source [2802] and the second visible-light source [2816] and the third visible-light source [2817] may be provided.

In further examples [2700] of the lighting controller, the control system [2702] may be programmed for facilitating an alignment being represented by arrows [2902], [2904] of the first beam [2812] towards a first boundary represented by a dashed line [B1] of an ambient space represented by a dashed box [S] and for facilitating another alignment being represented by arrows [2906], [2908] of the second beam [2824] towards a second boundary represented by a dashed line [B2] of the ambient space [S] being opposite to the first boundary [B1]. In some of those examples [2700] of the lighting controller, the control system [2702] may be programmed for facilitating the alignment [2902], [2904] of the first beam [2812] as being towards the first boundary [B1] of the ambient space [S] and for facilitating the alignment [2906], [2908] of the second beam [2824] as being towards the second boundary [B2] of the ambient space [S], with each of the first and second beams [2812], [2824] being respectively aligned toward the boundaries [B1] and [B2] as being spaced apart from and on opposite sides of a vertical dashed line [2910] intersecting the longitudinal axis [2810]. In further examples [2700] of the lighting controller, the control system [2702] may be programmed for facilitating an alignment being represented by arrows [2911], [2913] of the third beam [2825] being along the vertical dashed line [2910] or being in another direction between the alignment [2902], [2904] and the alignment [2906], [2908]. As additional examples [2700] of the lighting controller, the control system [2702] may include an indicator [2708] for facilitating an alignment being represented by the arrows [2902], [2904] of the first beam [2812] towards the first boundary [B1] of the ambient space [S] and for facilitating another alignment being represented by the arrows [2906], [2908] of the second beam [2824] towards the second boundary [B2] of the ambient space [S] being opposite to the first boundary [B1]. In some examples [2700] of the lighting controller, the control system [2702] may be programmed for facilitating an alignment being represented by arrows [2902], [2904] of the first beam [2812] towards an Eastward direction being represented by an arrow [2912] and for facilitating another alignment being represented by arrows [2906], [2908] of the second beam [2824] towards a Westward direction being represented by an arrow [2914]. In further examples [2700] of the lighting controller, the control system [2702] may provide the indicator [2708] as being for facilitating an alignment being represented by arrows [2902], [2904] of the first beam [2812] towards an Eastward direction being represented by the arrow [2912] and for facilitating another alignment being represented by arrows [2906], [2908] of the second beam [2824] towards a Westward direction being represented by the arrow [2914].

In some examples [2700] of the lighting controller, the control system [2702] may be programmed for modulating the first intensity [2828] of the first beam [2812] and the second intensity [2830] of the second beam [2824] and the third intensity [2833] of the third beam [2825] in a manner for causing the first and second and third beams [2812], [2824], [2825] of the first and second and third visible-light emissions [2814], [2815], [2826], [2827], [2829], [2831] to collectively emulate the progression of ambient sunlight [2832] through a portion of a cycle extending from sunrise being represented by a line [2834] to sunset being represented by a line [2836]; or through a period beginning before sunrise; or through a period ending after sunset; or through a period both beginning before sunrise and ending after sunset. In some examples [2700] of the lighting controller, the control system [2702] may be programmed for modulating the first intensity [2828] of the first beam [2812] and

the second intensity [2830] of the second beam [2824] and the third intensity [2833] of the third beam [2825] in a manner for causing the first and second and third beams [2812], [2824], [2825] of the first and second and third visible-light emissions [2814], [2815], [2826], [2827], [2829], [2831] to collectively emulate the progression of ambient sunlight [2832] throughout the cycle extending from sunrise being represented by the line [2834] to sunset being represented by the line [2836]. In further examples [2700] of the lighting controller, the control system [2702] may be programmed for modulating the first intensity [2828] of the first beam [2812] and the second intensity [2830] of the second beam [2824] and the third intensity [2833] of the third beam [2825] in a manner for causing the first and second and third beams [2812], [2824], [2825] of the first and second and third visible-light emissions [2814], [2815], [2826], [2827], [2829], [2831] to collectively initiate an emulation of the progression of ambient sunlight [2832] when a local sunrise occurs as represented by the line [2834] and to collectively conclude the emulation when a corresponding local sunset occurs as represented by the line [2836]. In some of those examples [2700] of the lighting controller, the control system [2702] may include an ambient light sensor [2710] being programmed for sensing an occurrence of the local sunrise [2834] or an occurrence of the local sunset [2836]. In other examples [2700] of the lighting controller, the control system [2702] may include a programmable user interface [2712] enabling an arbitrary selection of a simulated sunrise time [2834] and a simulated sunset time [2836].

In some examples [2700] of the lighting controller, the control system [2702] may be programmed for modulating the first intensity [2828] of the first beam [2812] in a first range, and for modulating the second intensity [2830] of the second beam [2824] in a second range, and for modulating the third intensity [2833] of the third beam [2825] in a third range, in a manner for causing the first and second and third beams [2812], [2824], [2825] of the first and second and third visible-light emissions [2814], [2815], [2826], [2827], [2829], [2831] to collectively emulate the progression of ambient sunlight [2832]. In further examples [2700] of the lighting controller, the control system [2702] may be programmed for controlling the first beam [2812] of the first visible-light emissions [2814], [2815] as having a first baseline intensity being represented by an arrow [2838] and for controlling the second beam [2824] of the second visible-light emissions [2826], [2827] as having a second baseline intensity being represented by an arrow [2840] and for controlling the third beam [2825] of the third visible-light emissions [2829], [2831] as having a third baseline intensity being represented by an arrow [2841]; and the control system [2702] may be programmed for modulating the first intensity [2828] of the first beam [2812] in a first range [2842] being additive to the first baseline intensity [2838] and for modulating the second intensity [2830] of the second beam [2824] in a second range [2844] being additive to the second baseline intensity [2840] and for modulating the third intensity [2833] of the third beam [2825] in a third range [2843] being additive to the third baseline intensity [2841], in the manner for causing the first and second and third beams [2812], [2824], [2825] of the first and second and third visible-light emissions [2814], [2815], [2826], [2827], [2829], [2831] to collectively emulate the progression of ambient sunlight [2832]. In additional examples [2700] of the lighting controller, the control system [2702] may be programmed for controlling the first baseline intensity [2838] and the second baseline intensity [2840] and the third baseline intensity [2841] for causing the first beam [2812] and the second beam [2824] and the third beam [2825] to collectively form a pre-set baseline pattern of the first and second and third visible-light emissions [2814], [2815], [2826], [2827], [2829], [2831]. As examples [2700] of the lighting controller, the control system [2702] may be programmed for selection among a plurality of different pre-programmed combinations of the baseline intensities [2838], [2840], [2841] for the first visible-light emissions [2814], [2815], the second visible-light emissions [2826], [2827], and the third visible-light emissions [2829], [2831]. In some of those examples [2700] of the lighting controller, the control system [2702] may be programmed for controlling the first baseline intensity [2838] and the second baseline intensity [2840] and the third baseline intensity [2841] for causing the first beam [2812] and the second beam [2824] and the third beam [2825] to collectively form a pre-set baseline pattern of the first and second and third visible-light emissions [2814], [2815], [2826], [2827], [2829], [2831] being: center wall graze; table with wall-fill; wall wash right; wall wash left; double wall wash; wall wash right plus floor; wall wash left plus floor; room; or batwing. In examples [2700] of the lighting controller, the control system [2702] may cause the first beam [2812] and the second beam [2824] and the third beam [2825] to respectively have the following baseline intensities [2838]/[2840]/[2841] collectively constituting one hundred percent of a variable baseline power input of the control system [2702] in order to form the following pre-set baseline patterns of the first and second and third visible-light emissions [2814], [2815], [2826], [2827], [2829], [2831]: center wall graze [0/100/0]; table with wall-fill [17/66/17]; wall wash right [0/0/100]; wall wash left [100/0/0]; double wall wash [50/0/50]; wall wash right plus floor [0/33/67]; wall wash left plus floor [67/33/0]; low-glare room lighter [33/34/33]; or low glare quasi-batwing [40/20/40].

In some examples [2700] of the lighting controller, the control system [2702] may regulate a distribution of a variable baseline power input to: the first plurality of semiconductor light-emitting devices [2804], [2806], [2808] of the first visible-light source [2802] for controlling the baseline intensity [2838] of the first visible-light emissions [2814], [2815]; and the second plurality of semiconductor light-emitting devices [2818], [2820], [2822] of the second visible-light source [2816] for controlling the baseline intensity [2840] of the second visible-light emissions [2826], [2827]; and the third plurality of semiconductor light-emitting devices [2819], [2821], [2823] of the third visible-light source [2817] for controlling the baseline intensity [2841] of the third visible-light emissions [2829], [2831]. Further in those examples [2700] of the lighting controller, the control system [2702] may regulate a distribution of a variable additive power input to: the first plurality of semiconductor light-emitting devices [2804], [2806], [2808] of the first visible-light source [2802] for controlling the additive intensity [2842] of the first visible-light emissions [2814], [2815]; and the second plurality of semiconductor light-emitting devices [2818], [2820], [2822] of the second visible-light source [2816] for controlling the additive intensity [2844] of the second visible-light emissions [2826], [2827]; and the third plurality of semiconductor light-emitting devices [2819], [2821], [2823] of the third visible-light source [2817] for controlling the additive intensity [2843] of the third visible-light emissions [2829], [2831].

In further examples [2700] of the lighting controller, the control system [2702] may be programmed for transitioning, over a selectable time period, the baseline intensities [2838],

[2840], [2841] for the first visible-light emissions [2814], [2815], the second visible-light emissions [2826], [2827], and the third visible-light emissions [2829], [2831] from a one of the plurality of pre-programmed combinations to another one of the plurality of pre-programmed combinations.

In some examples [2700] of the lighting controller, the first beam direction [2814], [2815] and the second beam direction [2826], [2827] and the third beam direction [2829], [2831] may be down-light beam directions as represented by the arrows [2828], [2830], [2833]. Further in those examples [2700], the control system [2702] may further include a fourth control facility [2718] being coupled with a fourth visible-light source [2916] including a fourth plurality of semiconductor light-emitting devices [2918], [3106], [3002] being spaced apart from and along the longitudinal axis [2810]. Further in those examples [2700] of the lighting controller, the fourth visible-light source [2916] may be positioned for directing a fourth beam [2920] of fourth visible-light emissions being represented by arrows [3114], [3115] from the fourth plurality of semiconductor light-emitting devices [2918], [3106], [3002] in a fourth beam direction also represented by the arrows [3114], [3115], being an up-light beam direction. Additionally in those examples [2700], the control system [2702] may further include a fifth control facility [2720] being coupled with a fifth visible-light source [2922] including a fifth plurality of semiconductor light-emitting devices [2924], [3120], [3006] being spaced apart from and along the longitudinal axis [2810]. Further in those examples [2700] of the lighting controller, the fifth visible-light source [2922] may be positioned for directing a fifth beam [2926] of fifth visible-light emissions being represented by arrows [3126], [3127] from the fifth plurality of semiconductor light-emitting devices [2924], [3120], [3006] in a fifth beam direction also represented by the arrows [3126], [3127], being an up-light beam direction. Further in those examples [2700], the control system [2702] may be programmed for causing the fourth and fifth beams [2920], [2926] to be collectively synchronized with the progression of ambient sunlight [2832] by initially modulating a fourth intensity [3128] of the fourth beam [2920] to relatively be substantially greater than a fifth intensity [3130] of the fifth beam [2926], and by then gradually modulating the fifth intensity [3130] of the fifth beam [2926] to relatively become substantially greater than the fourth intensity [3128] of the fourth beam [2920].

Further in those examples [2700], the control system [2702] may additionally include a sixth control facility [2722] being coupled with a sixth visible-light source [2928] including a sixth plurality of semiconductor light-emitting devices [2930], [3121], [3004] being spaced apart from and along the longitudinal axis [2810]. Further in those examples [2700] of the lighting controller, the sixth visible-light source [2928] may be positioned for directing a sixth beam [2932] of sixth visible-light emissions being represented by arrows [3129], [3131] from the sixth plurality of semiconductor light-emitting devices [2930], [3121], [3004] in a sixth beam direction also represented by the arrows [3129], [3131], being an up-light beam direction. Also in those examples [2700], the control system [2702] may be programmed for causing the fourth and fifth and sixth beams [2920], [2926], [2932] to be collectively synchronized with the progression of ambient sunlight [2832] by initially modulating the fourth intensity [3128] of the fourth beam [2920] to relatively be substantially greater than a sixth intensity [3133] of the sixth beam [2932] while modulating the sixth intensity [3133] of the sixth beam [2932] to relatively be substantially greater than the fifth intensity [3130] of the fifth beam [2926]; and by then gradually modulating the fifth intensity [3130] of the fifth beam [2926] to relatively become substantially greater than the sixth intensity [3133] of the sixth beam [2932] while gradually modulating the sixth intensity [3133] of the sixth beam [2932] to relatively become substantially greater than the fourth intensity [3128] of the fourth beam [2920]. In other examples [2700] of the lighting controller, the control system [2702] may be programmed for causing two of the beams [2920], [2926], [2932] among the fourth and fifth and sixth beams [2920], [2926], [2932] to be collectively synchronized with the progression of ambient sunlight [2832] by initially modulating an intensity [3128], [3130], [3133] of a one of the beams [2920], [2926], [2932] to relatively be substantially greater than another intensity [3128], [3130], [3133] of another one of the beams [2920], [2926], [2932], and by then gradually modulating the another intensity [3128], [3130], [3133] of the another one of the beams [2920], [2926], [2932] to relatively become substantially greater than the intensity [3128], [3130], [3133] of the one of the beams [2920], [2926], [2932].

FIGS. 27-31 further illustrate an example [2800] of an implementation of a lighting system. In some examples, the lighting system [2800] may include: the first visible-light source [2802]; and the second visible-light source [2816]; and the third visible-light source [2817]; and the example [2700] of the lighting controller. In the example [2800] of the lighting system, the lighting controller [2700] may include the control system [2702]. Further in the example [2800] of the lighting system, the control system [2702] may include the first control facility [2704] and the second control facility [2706] and the third control facility [2707]. Additionally in the example [2800] of the lighting system, the first control facility [2704] may be coupled as represented by a dashed line [2714] with the first visible-light source [2802] for controlling the first intensity [2828] of the first beam [2812] of the first visible-light emissions [2814], [2815]. Further in the example [2800] of the lighting system, the second control facility [2706] may be coupled as represented by a dashed line [2716] with the second visible-light source [2816] for controlling the second intensity [2830] of the second beam [2824] of the second visible-light emissions [2826], [2827]. Additionally in the example [2800] of the lighting system, the third control facility [2707] may be coupled as represented by a dashed line [2718] with the third visible-light source [2817] for controlling the third intensity [2833] of the third beam [2825] of the third visible-light emissions [2829], [2831]. In the example [2800] of the lighting system, the first control facility [2704] may be for controlling the first visible-light source [2802] as including a first plurality of semiconductor light-emitting devices [2804], [2806], [2808] being spaced apart from and along a longitudinal axis [2810], the first visible-light source [2802] being positioned for directing a first beam [2812] of first visible-light emissions being represented by arrows [2814], [2815] from the first plurality of semiconductor light-emitting devices [2804], [2806], [2808] in a first beam direction also represented by the arrows [2814], [2815]. In the example [2800] of the lighting system, the second control facility [2706] may be for controlling a second visible-light source [2816] including a second plurality of semiconductor light-emitting devices [2818], [2820], [2822] being spaced apart from and along the longitudinal axis [2810], the second visible-light source [2816] being positioned for directing a second beam [2824] of second visible-light emissions being represented by arrows [2826], [2827] from the second

plurality of semiconductor light-emitting devices [2818], [2820], [2822] in a second beam direction also being represented by the arrows [2826], [2827]. In the example [2800] of the lighting system, the third control facility [2707] may be for controlling a third visible-light source [2817] including a third plurality of semiconductor light-emitting devices [2819], [2821], [2823] being spaced apart from and along the longitudinal axis [2810], the third visible-light source [2817] being positioned for directing a third beam [2825] of third visible-light emissions being represented by arrows [2829], [2831] from the third plurality of semiconductor light-emitting devices [2819], [2821], [2823] in a third beam direction also being represented by the arrows [2829], [2831]. In some examples [2800] of the lighting system, the first visible-light source [2802] may include the first plurality of semiconductor light-emitting devices [2804], [2806], [2808] as being arranged in a first string as shown in FIG. 28; and the second visible-light source [2816] may include the second plurality of semiconductor light-emitting devices [2818], [2820], [2822] as being arranged in a second string also shown in FIG. 28; and the third visible-light source [2817] may include the third plurality of semiconductor light-emitting devices [2819], [2821], [2823] as being arranged in a third string also shown in FIG. 28; and the first and second and third strings may generally be mutually parallel. In other examples [2800] of the lighting system (not shown), the first and second and third strings may generally oriented as not being mutually parallel.

In the example [2800] of the lighting system, the first control facility [2704] may be programmed for controlling a first intensity being represented by an arrow [2828] of the first beam [2812] of the first visible-light emissions [2814], [2815], and the second control facility [2706] may be programmed for controlling a second intensity being represented by an arrow [2830] of the second beam [2824] of the second visible light emissions [2826], [2827] and the third control facility [2707] may be programmed for controlling a third intensity being represented by an arrow [2833] of the third beam [2825] of the third visible light emissions [2829], [2831]. In the example [2800] of the lighting system, the control system [2702] may be programmed for modulating the first intensity [2828] of the first beam [2812] and the second intensity [2830] of the second beam [2824] and the third intensity [2833] of the third beam [2825] in a manner for causing the first and second and third beams [2812], [2824], [2825] of the first and second and third visible-light emissions [2814], [2815], [2826], [2827], [2829], [2831] to collectively emulate a progression of ambient sunlight being represented by an arrow [2832].

In some examples [2800] of the lighting system, the first beam direction [2814], [2815] and the second beam direction [2826], [2827] and the third beam direction [2829], [2831] may be down-light beam directions as represented by the arrows [2828], [2830], [2832]. Further in those examples [2800] of the lighting system, the control system [2702] may further include a fourth control facility [2718] being coupled as represented by a dashed line [2715] with a fourth visible-light source [2916] including a fourth plurality of semiconductor light-emitting devices [2918], [3106], [3002] being spaced apart from and along the longitudinal axis [2810]. Further in those examples [2800] of the lighting system, the fourth visible-light source [2916] may be positioned for directing a fourth beam [2920] of fourth visible-light emissions being represented by arrows [3114], [3115] from the fourth plurality of semiconductor light-emitting devices [2918], [3106], [3002] in a fourth beam direction also represented by the arrows [3114], [3115], being an up-light beam direction.

Additionally in those examples [2800] of the lighting system, the control system [2702] may additionally include a fifth control facility [2720] being coupled as represented by a dashed line [2717] with a fifth visible-light source [2922] including a fifth plurality of semiconductor light-emitting devices [2924], [3120], [3006] being spaced apart from and along the longitudinal axis [2810]. Further in those examples [2800] of the lighting system, the fifth visible-light source [2922]may be positioned for directing a fifth beam [2926] of fifth visible-light emissions being represented by arrows [3126], [3127] from the fifth plurality of semiconductor light-emitting devices [2924], [3120], [3006] in a fifth beam direction also represented by the arrows [3126], [3127], being an up-light beam direction. Further in those examples [2800] of the lighting system, the control system [2702] may be programmed for causing the fourth and fifth beams [2920], [2926] to be collectively synchronized with the progression of ambient sunlight [2832] by initially modulating a fourth intensity [3128] of the fourth beam [2920] to relatively be substantially greater than a fifth intensity [3130] of the fifth beam [2926], and by then gradually modulating the fifth intensity [3130] of the fifth beam [2926] to relatively become substantially greater than the fourth intensity [3128] of the fourth beam [2920].

Also in those examples [2800] of the lighting system, the control system [2702] may additionally include a sixth control facility [2722] being coupled as represented by a dashed line [2719] with a sixth visible-light source [2928] including a sixth plurality of semiconductor light-emitting devices [2930], [3121], [3004] being spaced apart from and along the longitudinal axis [2810]. Further in those examples [2800] of the lighting system, the sixth visible-light source [2928] may be positioned for directing a sixth beam [2932] of sixth visible-light emissions being represented by arrows [3129], [3131] from the sixth plurality of semiconductor light-emitting devices [2930], [3121], [3004] in a sixth beam direction also represented by the arrows [3129], [3131], being an up-light beam direction. Also in those examples [2800] of the lighting system, the control system [2702] may be programmed for causing the fourth and fifth and sixth beams [2920], [2926], [2932] to be collectively synchronized with the progression of ambient sunlight [2832] by initially modulating the fourth intensity [3128] of the fourth beam [2920] to relatively be substantially greater than a sixth intensity [3133] of the sixth beam [2932] while modulating the sixth intensity [3133] of the sixth beam [2932] to relatively be substantially greater than the fifth intensity [3130] of the fifth beam [2926]; and by then gradually modulating the fifth intensity [3130] of the fifth beam [2926] to relatively become substantially greater than the sixth intensity [3133] of the sixth beam [2932] while gradually modulating the sixth intensity [3133] of the sixth beam [2932] to relatively become substantially greater than the fourth intensity [3128] of the fourth beam [2920].

FIG. 32 is a schematic diagram of an example [3200] of a lighting controller, being utilized together with the lighting system [100] discussed earlier in connection with FIGS. 1-4.

Examples [1700], [2200], [2700], [3200], and [3300] of lighting controllers are discussed herein, respectively, in connection with FIGS. 17-21; 22-26; 27-31; 32, 1-4; and 33, 9-12. Examples [3400], [3500], [3600] of lighting control methods are discussed herein, respectively, in connection with FIGS. 34, 17-21; 35, 22-26; and 36, 27-31. Examples [100], [500], [900], [1300], [1800], [2300], [2800], [3700],

[4000] of lighting systems that may be utilized together with the example [3200] of the lighting controllers are discussed herein, respectively, in connection with FIGS. 1-4; 5-8; 9-12; 13-16; 18-21; 22-26; 27-31; 37-39; and 40-42. It is understood throughout this specification that each one of the examples [1700], [2200], [2700], [3200], [3300] of the lighting controllers may be utilized together with a lighting system [100], [500], [900], [1300], [1800], [2300], [2800], [3700], [4000] including any of the features or combinations of features that are disclosed in connection with any one or more of such lighting systems. It is further understood throughout this specification that each one of the examples [3400], [3500], [3600] of the lighting control methods may be utilized together with any of the examples [1700], [2200], [2700], [3200], [3300] of the lighting controllers, for controlling a lighting system [100], [500], [900], [1300], [1800], [2300], [2800], [3700], [4000] including any of the features or combinations of features that are disclosed in connection with any one or more of such lighting systems. It is additionally understood throughout this specification that a lighting system [100], [500], [900], [1300], [1800], [2300], [2800], [3700], [4000] may include any of the features or combinations of features that are disclosed in connection with any one or more of such lighting systems. Accordingly, FIGS. 1-42 and the entireties of the discussions of the examples [100], [500], [900], [1300], [1800], [2300], [2800], [3700], [4000] of lighting systems and the entireties of the discussions of the examples [1700], [2200], [2700], [3200], [3300] of the lighting controllers and the entireties of the discussions of the examples [3400], [3500], [3600] of lighting control methods are hereby incorporated into the following discussion of the example [3200] of an implementation of the lighting controller.

As shown in FIG. 32, the example [3200] of the implementation of the lighting controller includes a control system [3202] including a first control facility [3204] and a second control facility [3206] and a third control facility [3207]. In the example [3200] of the lighting controller, the first control facility [3204] is for controlling a first visible-light source [118] including a first plurality of semiconductor light-emitting devices [120], [122] being spaced apart from and along a longitudinal axis [108], the first visible-light source [118] being positioned for directing a first beam of first visible-light emissions being represented by arrows [124], [126] from the first plurality of semiconductor light-emitting devices [120], [122] into an edge-lit lightguide panel [102] in a first beam direction being represented by the arrows [124], [126]. In the example [3200] of the lighting controller, the second control facility [3206] is for controlling a second visible-light source [136] including a second plurality of semiconductor light-emitting devices [138], [140] being spaced apart from and along the longitudinal axis [108], the second visible-light source [136] being positioned for directing a second beam of second visible-light emissions being represented by arrows [142], [144] from the second plurality of semiconductor light-emitting devices [138], [140] into another edge-lit lightguide panel [104] in a second beam direction being represented by the arrows [142], [144]. In the example [3200] of the lighting controller, the first control facility [3204] is programmed for controlling a first intensity of the first beam [124], [126] of the first visible-light emissions [124], [126], and the second control facility [3206] is programmed for controlling a second intensity of the second beam [142], [144] of the second visible light emissions [142], [144]. In the example [3200] of the lighting controller, the control system [3202] is programmed for modulating the first intensity of the first beam [124], [126] and the second intensity of the second beam [142], [144] in a manner for causing the first and second beams [124], [126], [142], [144] of the first and second visible-light emissions [124], [126], [142], [144] to collectively emulate a progression of ambient sunlight being represented by an arrow [190]. In some examples [3200] of the lighting controller, the third control facility [3207] may be for controlling a third visible-light source [154] including a third plurality of semiconductor light-emitting devices [156], [158] being spaced apart from and along the longitudinal axis [108], the third visible-light source [154] being positioned for directing a third beam of third visible-light emissions being represented by arrows [160], [162] from the third plurality of semiconductor light-emitting devices [156], [158] in a beam direction being represented by the arrows [160], [162] through a total internal reflection lens [106] generally towards an output interface [148]. In those examples [3200] of the lighting controller, the control system [3202] may be programmed for modulating the first intensity of the first beam [124], [126] and the second intensity of the second beam [142], [144] and the third intensity of the third beam [160], [162] in a manner for causing the first and second and third beams [124], [126], [142], [144], [160], [162] of the first and second and third visible-light emissions [124], [126], [142], [144], [160], [162] to collectively emulate a progression of ambient sunlight being represented by the arrow [190].

FIG. 33 is a schematic diagram of an example [3300] of a lighting controller, being utilized together with the lighting system [900] discussed earlier in connection with FIGS. 9-12. Examples [1700], [2200], [2700], [3200], and [3300] of lighting controllers are discussed herein, respectively, in connection with FIGS. 17-21; 22-26; 27-31; 32, 1-4; and 33, 9-12. Examples [3400], [3500], [3600] of lighting control methods are discussed herein, respectively, in connection with FIGS. 34, 17-21; 35, 22-26; and 36, 27-31. Examples [100], [500], [900], [1300], [1800], [2300], [2800], [3700], [4000] of lighting systems that may be utilized together with the example [3300] of the lighting controllers are discussed herein, respectively, in connection with FIGS. 1-4; 5-8; 9-12; 13-16; 18-21; 22-26; 27-31; 37-39; and 40-42. It is understood throughout this specification that each one of the examples [1700], [2200], [2700], [3200], [3300] of the lighting controllers may be utilized together with a lighting system [100], [500], [900], [1300], [1800], [2300], [2800], [3700], [4000] including any of the features or combinations of features that are disclosed in connection with any one or more of such lighting systems. It is further understood throughout this specification that each one of the examples [3400], [3500], [3600] of the lighting control methods may be utilized together with any of the examples [1700], [2200], [2700], [3200], [3300] of the lighting controllers, for controlling a lighting system [100], [500], [900], [1300], [1800], [2300], [2800], [3700], [4000] including any of the features or combinations of features that are disclosed in connection with any one or more of such lighting systems. It is additionally understood throughout this specification that a lighting system [100], [500], [900], [1300], [1800], [2300], [2800], [3700], [4000] may include any of the features or combinations of features that are disclosed in connection with any one or more of such lighting systems. Accordingly, FIGS. 1-42 and the entireties of the discussions of the examples [100], [500], [900], [1300], [1800], [2300], [2800], [3700], [4000] of lighting systems and the entireties of the discussions of the examples [1700], [2200], [2700], [3200], [3300] of the lighting controllers and the entireties of the discussions of the examples [3400], [3500], [3600] of

lighting control methods are hereby incorporated into the following discussion of the example [3300] of an implementation of the lighting controller.

As shown in FIG. 33, the example [3300] of the implementation of the lighting controller includes a control system [3302] including a first control facility [3304] and a second control facility [3306] and a third control facility [3307]. In the example [3300] of the lighting controller, the first control facility [3304] is for controlling a first visible-light source [918] including a first plurality of semiconductor light-emitting devices [920], [922] being spaced apart from and along a longitudinal axis [908], the first visible-light source [918] being positioned for directing a first beam of first visible-light emissions being represented by arrows [924], [926] from the first plurality of semiconductor light-emitting devices [920], [922] into an edge-lit lightguide panel [902] in a first beam direction being represented by the arrows [924], [926]. In the example [3300] of the lighting controller, the second control facility [3306] is for controlling a second visible-light source [936] including a second plurality of semiconductor light-emitting devices [938], [940] being spaced apart from and along the longitudinal axis [908], the second visible-light source [936] being positioned for directing a second beam of second visible-light emissions being represented by arrows [942], [944] from the second plurality of semiconductor light-emitting devices [938], [940] into another edge-lit lightguide panel [904] in a second beam direction being represented by the arrows [942], [944]. In the example [3300] of the lighting controller, the first control facility [3304] is programmed for controlling a first intensity of the first beam [924], [926] of the first visible-light emissions [924], [926], and the second control facility [3306] is programmed for controlling a second intensity of the second beam [942], [944] of the second visible light emissions [942], [944]. In the example [3300] of the lighting controller, the control system [3302] is programmed for modulating the first intensity of the first beam [924], [926] and the second intensity of the second beam [942], [944] in a manner for causing the first and second beams [924], [926], [942], [944] of the first and second visible-light emissions [924], [926], [942], [944] to collectively emulate a progression of ambient sunlight being represented by an arrow [990]. In some examples [3300] of the lighting controller, the third control facility [3307] may be for controlling a third visible-light source [954] including a third plurality of semiconductor light-emitting devices [956], [958] being spaced apart from and along the longitudinal axis [908], the third visible-light source [954] being positioned for directing a third beam of third visible-light emissions being represented by arrows [960], [962] from the third plurality of semiconductor light-emitting devices [956], [958] in a beam direction being represented by the arrows [960], [962] through a bowl reflector [906] generally towards an output interface [948]. In those examples [3300] of the lighting controller, the control system [3302] may be programmed for modulating the first intensity of the first beam [924], [926] and the second intensity of the second beam [942], [944] and the third intensity of the third beam [960], [962] in a manner for causing the first and second and third beams [924], [926], [942], [944], [960], [962] of the first and second and third visible-light emissions [924], [926], [942], [944], [960], [962] to collectively emulate a progression of ambient sunlight being represented by the arrow [990].

FIG. 34 is a flow chart of an example [3400] of a lighting control method that may be carried out, as an example, utilizing the lighting controller [1700] discussed earlier in connection with FIGS. 17-21.

Examples [1700], [2200], [2700], [3200], and [3300] of lighting controllers are discussed herein, respectively, in connection with FIGS. 17-21; 22-26; 27-31; 32, 1-4; and 33, 9-12. Examples [3400], [3500], [3600] of lighting control methods are discussed herein, respectively, in connection with FIGS. 34, 17-21; 35, 22-26; and 36, 27-31. Examples [100], [500], [900], [1300], [1800], [2300], [2800], [3700], [4000] of lighting systems that may be utilized together with the example [3400] of the lighting control method are discussed herein, respectively, in connection with FIGS. 1-4; 5-8; 9-12; 13-16; 18-21; 22-26; 27-31; 37-39; and 40-42. It is understood throughout this specification that each one of the examples [1700], [2200], [2700], [3200], [3300] of the lighting controllers may be utilized together with a lighting system [100], [500], [900], [1300], [1800], [2300], [2800], [3700], [4000] including any of the features or combinations of features that are disclosed in connection with any one or more of such lighting systems. It is further understood throughout this specification that each one of the examples [3400], [3500], [3600] of the lighting control methods may be utilized together with any of the examples [1700], [2200], [2700], [3200], [3300] of the lighting controller, for controlling a lighting system [100], [500], [900], [1300], [1800], [2300], [2800], [3700], [4000] including any of the features or combinations of features that are disclosed in connection with any one or more of such lighting systems. It is additionally understood throughout this specification that a lighting system [100], [500], [900], [1300], [1800], [2300], [2800], [3700], [4000] may include any of the features or combinations of features that are disclosed in connection with any one or more of such lighting systems. Accordingly, FIGS. 1-42 and the entireties of the discussions of the examples [100], [500], [900], [1300], [1800], [2300], [2800], [3700], [4000] of lighting systems and the entireties of the discussions of the examples [1700], [2200], [2700], [3200], [3300] of the lighting controllers and the entireties of the discussions of the examples [3400], [3500], [3600] of lighting control methods are hereby incorporated into the following discussion of the example [3400] of an implementation of the lighting control method.

As shown in FIG. 34 and FIGS. 17-21, the example [3400] of the implementation of the lighting control method starts at step [3410]. At step [3420], the example [3400] of the lighting control method includes providing a control system [1702] including a first control facility [1704] and a second control facility [1706]. Step [3430] of the example [3400] of the lighting control method includes placing the first control facility [1704] in control of a first visible-light source [1802] including a first plurality of semiconductor light-emitting devices [1804], [1806], [1808] being spaced apart from and along a longitudinal axis [1810]; and includes positioning the first visible-light source [1802] for directing a first beam [1812] of first visible-light emissions being represented by arrows [1814], [1815] from the first plurality of semiconductor light-emitting devices [1804], [1806], [1808] in a first beam direction also represented by the arrows [1814], [1815]. Additionally, step [3430] of the example [3400] of the lighting control method includes placing the second control facility [1706] in control of a second visible-light source [1816] including a second plurality of semiconductor light-emitting devices [1818], [1820], [1822] being spaced apart from and along the longitudinal axis [1810]; and includes positioning the second visible-light source [1816] for directing a second beam [1824] of second visible-light emissions being represented

by arrows [1826], [1827] from the second plurality of semiconductor light-emitting devices [1818], [1820], [1822] in a second beam direction also being represented by the arrows [1826], [1827]. At step [3440] of the example [3400] of the lighting control method, the first control facility [1704] is caused to control a first intensity being represented by an arrow [1828] of the first beam [1812] of the first visible-light emissions [1814], [1815]; and the second control facility [1706] is caused to control a second intensity being represented by an arrow [1830] of the second beam [1824] of the second visible light emissions [1826], [1827]. Also at step [3440] of the example [3400] of the lighting control method, the control system [1702] is caused to modulate the first intensity [1828] of the first beam [1812] and the second intensity [1830] of the second beam [1824] in a manner causing the first and second beams [1812], [1824] of the first and second visible-light emissions [1814], [1815], [1826], [1827] to collectively emulate a progression of ambient sunlight being represented by an arrow [1832]. In some examples [3400], the lighting control method may then end at step [3450].

In some examples [3400] of the lighting control method, step [3440] may include the control system [1702] as causing the first and second beams [1812], [1824] to collectively emulate the progression [1832] of ambient sunlight by initially modulating the first intensity [1828] of the first beam [1812] to relatively be substantially greater than the second intensity [1830] of the second beam [1824], and by then gradually modulating the second intensity [1830] of the second beam [1824] to relatively become substantially greater than the first intensity [1828] of the first beam [1812]. In further examples [3400] of the lighting control method, step [3440] may include causing the control system [1702] to facilitate an alignment being represented by arrows [1902], [1904] of the first beam [1812] towards a first boundary represented by a dashed line [B1] of an ambient space represented by a dashed box [S] and to facilitate another alignment being represented by arrows [1906], [1908] of the second beam [1824] towards a second boundary represented by a dashed line [B2] of the ambient space [S] being opposite to the first boundary [B1]. In some of those examples [3400] of the lighting control method, step [3440] may include causing the control system [1702] to facilitate the alignment [1902], [1904] of the first beam [1812] as being towards the first boundary [B1] of the ambient space [S] and to facilitate the alignment [1906], [1908] of the second beam [1824] as being towards the second boundary [B2] of the ambient space [S], with each of the first and second beams [1812], [1824] being aligned toward the boundaries [B1] and [B2] as being spaced apart from and on opposite sides of a vertical dashed line [1910] intersecting the longitudinal axis [1810]. As additional examples [3400] of the lighting control method, step [3420] may include providing the control system [1702] as having an indicator [1708] for facilitating an alignment being represented by the arrows [1902], [1904] of the first beam [1812] towards the first boundary [B1] of the ambient space [S] and for facilitating another alignment being represented by the arrows [1906], [1908] of the second beam [1824] towards the second boundary [B2] of the ambient space [S] being opposite to the first boundary [B1]. In some examples [3400] of the lighting control method, step [3440] may include causing the control system [1702] to facilitate an alignment being represented by arrows [1902], [1904] of the first beam [1812] towards an Eastward direction being represented by the dashed line [B1] of the ambient space [S] and to facilitate another alignment being represented by arrows [1906], [1908] of the second beam [1824] towards a Westward direction being represented by the dashed line [B2] of the ambient space [S] being opposite to the Eastward direction [B1]. In further examples [3400] of the lighting control method, step [3420] may include providing the control system [1702] with the indicator [1708] as being for facilitating an alignment being represented by arrows [1902], [1904] of the first beam [1812] towards an Eastward direction being represented by the dashed line [B1] of the ambient space [S] and as being for facilitating another alignment being represented by arrows [1906], [1908] of the second beam [1824] towards a Westward direction being represented by the dashed line [B2] of the ambient space [S] being opposite to the Eastward direction [B1].

In some examples [3400] of the lighting control method, step [3440] may include causing the control system [1702] to modulate the first intensity [1828] of the first beam [1812] and the second intensity [1830] of the second beam [1824] in a manner for causing the first and second beams [1812], [1824] of the first and second visible-light emissions [1814], [1815], [1826], [1827] to collectively emulate the progression of ambient sunlight [1832] through a portion of a cycle extending from sunrise being represented by a line [1834] to sunset being represented by a line [1836]; or through a period beginning before sunrise; or through a period ending after sunset; or through a period both beginning before sunrise and ending after sunset. In some examples [3400] of the lighting control method, step [3440] may include causing the control system [1702] to modulate the first intensity [1828] of the first beam [1812] and the second intensity [1830] of the second beam [1824] in a manner causing the first and second beams [1812], [1824] of the first and second visible-light emissions [1814], [1815], [1826], [1827] to collectively emulate the progression of ambient sunlight [1832] throughout the cycle extending from sunrise being represented by the line [1834] to sunset being represented by the line [1836]. In further examples [3400] of the lighting control method, step [3440] may include causing the control system [1702] to modulate the first intensity [1828] of the first beam [1812] and the second intensity [1830] of the second beam [1824] in a manner for causing the first and second beams [1812], [1824] of the first and second visible-light emissions [1814], [1815], [1826], [1827] to collectively initiate an emulation of the progression of ambient sunlight [1832] when a local sunrise occurs as represented by the line [1834] and to collectively conclude the emulation when a corresponding local sunset occurs as represented by the line [1836]. In some of those examples [3400] of the lighting control method, step [3420] may include providing the control system [1702] as including an ambient light sensor [1710] being programmed for sensing an occurrence of the local sunrise [1834] or an occurrence of the local sunset [1836]. In other examples [3400] of the lighting control method, step [3420] may include providing the control system [1702] as including a programmable user interface [1712]; and step [3440] may include utilizing the programmable user interface [1712] to enter into the control system [1702] an arbitrary selection of a simulated sunrise time [1834] and a simulated sunset time [1836]. In further examples [3400] of the lighting control method, step [3440] may include causing the control system [1702] to modulate the first intensity [1828] of the first beam [1812] and the second intensity [1830] of the second beam [1824] as having a maximum ratio of the first intensity [1828] divided by the second intensity [1830], or as having a maximum ratio of the second intensity [1830] divided by the first intensity [1828], being at least about 10:1. In additional examples [3400] of

the lighting control method, step [3440] may include causing the control system [1702] to modulate the first intensity [1828] of the first beam [1812] and the second intensity [1830] of the second beam [1824] as having a maximum ratio of the first intensity [1828] divided by the second intensity [1830], or of the second intensity [1830] divided by the first intensity [1828], being at least about 100:1. In some examples [3400] of the lighting control method, step [3440] may include causing the control system [1702] to modulate the first intensity [1828] of the first beam [1812] in a first range, and to modulate the second intensity [1830] of the second beam [1824] in a second range, in a manner causing the first and second beams [1812], [1824] of the first and second visible-light emissions [1814], [1815], [1826], [1827] to collectively emulate the progression of ambient sunlight [1832].

In further examples [3400] of the lighting control method, step [3440] may include causing the control system [1702] to control the first beam [1812] of the first visible-light emissions [1814], [1815] as having a first baseline intensity being represented by an arrow [1838] and to control the second beam [1824] of the second visible-light emissions [1826], [1827] as having a second baseline intensity being represented by an arrow [1840]. Further in those examples [3400] of the lighting control method, step [3440] may include causing the control system [1702] to modulate the first intensity [1828] of the first beam [1812] in a first range [1842] being additive to the first baseline intensity [1838] and to modulate the second intensity [1830] of the second beam [1824] in a second range [1844] being additive to the second baseline intensity [1840], in a manner causing the first and second beams [1812], [1824] of the first and second visible-light emissions [1814], [1815], [1826], [1827] to collectively emulate the progression of ambient sunlight [1832].

In some examples [3400] of the lighting control method, step [3430] may include causing the control system [1702] to have the first control facility [1704] as being coupled as represented by a dashed line [1714] with the first visible-light source [1802] for controlling the first intensity [1828] of the first beam [1812] of the first visible-light emissions [1814], [1815]; and step [3430] may further include causing the control system [1702] to have the second control facility [1706] as being coupled as represented by a dashed line [1716] with the second visible-light source [1816] for controlling the second intensity [1830] of the second beam [1824] of the second visible-light emissions [1826], [1827].

In other examples [3400] of the lighting control method, step [3440] may include causing the control system [1702] to cause the first control facility [1704] to control the first visible-light source [1802] with the first plurality of semiconductor light-emitting devices [1804], [1806], [1808] being collectively configured for generating the first visible-light emissions [1814], [1815] as having a selectable first perceived color point [1812]. In those examples [3400] of the lighting control method, step [3440] may further include causing the control system [1702] to cause the second control facility [1706] to control the second visible-light source [1816] with the second plurality of semiconductor light-emitting devices [1818], [1820], [1822] being collectively configured for generating the second visible-light emissions [1826], [1827] as having a selectable second perceived color point [1824].

FIG. 35 is a flow chart of an example [3500] of alighting control method that may be carried out, as an example, utilizing the lighting controller [2200] discussed earlier in connection with FIGS. 22-26.

Examples [1700], [2200], [2700], [3200], and [3300] of lighting controllers are discussed herein, respectively, in connection with FIGS. 17-21; 22-26; 27-31; 32, 1-4; and 33, 9-12. Examples [3400], [3500], [3600] of lighting control methods are discussed herein, respectively, in connection with FIGS. 34, 17-21; 35, 22-26; and 36, 27-31. Examples [100], [500], [900], [1300], [1800], [2300], [2800], [3700], [4000] of lighting systems that may be utilized together with the example [3500] of the lighting control method are discussed herein, respectively, in connection with FIGS. 1-4; 5-8; 9-12; 13-16; 18-21; 22-26; 27-31; 37-39; and 40-42. It is understood throughout this specification that each one of the examples [1700], [2200], [2700], [3200], [3300] of the lighting controllers may be utilized together with a lighting system [100], [500], [900], [1300], [1800], [2300], [2800], [3700], [4000] including any of the features or combinations of features that are disclosed in connection with any one or more of such lighting systems. It is further understood throughout this specification that each one of the examples [3400], [3500], [3600] of the lighting control methods may be utilized together with any of the examples [1700], [2200], [2700], [3200], [3300] of the lighting controllers, for controlling a lighting system [100], [500], [900], [1300], [1800], [2300], [2800], [3700], [4000] including any of the features or combinations of features that are disclosed in connection with any one or more of such lighting systems. It is additionally understood throughout this specification that a lighting system [100], [500], [900], [1300], [1800], [2300], [2800], [3700], [4000] may include any of the features or combinations of features that are disclosed in connection with any one or more of such lighting systems. Accordingly, FIGS. 1-42 and the entireties of the discussions of the examples [100], [500], [900], [1300], [1800], [2300], [2800], [3700], [4000] of lighting systems and the entireties of the discussions of the examples [1700], [2200], [2700], [3200], [3300] of the lighting controllers and the entireties of the discussions of the examples [3400], [3500], [3600] of lighting control methods are hereby incorporated into the following discussion of the example [3500] of an implementation of the lighting control method.

As shown in FIG. 35 and in FIGS. 22-26, the example [3500] of the implementation of the lighting control method starts at step [3510]. At step [3520], the example [3500] of the lighting control method includes providing a control system [2202] including a first control facility [2204] and a second control facility [2206] and a third control facility [2207]. Further, step [3530] of the example [3500] of the lighting control method includes placing the first control facility [2204] in control of a first visible-light source [2302] including a first plurality of semiconductor light-emitting devices [2304], [2306], [2308] being spaced apart from and along a longitudinal axis [2310]; and includes positioning the first visible-light source [2302] for directing a first beam [2312] of first visible-light emissions being represented by arrows [2314], [2315] from the first plurality of semiconductor light-emitting devices [2304], [2306], [2308] in a first beam direction also represented by the arrows [2314], [2315]. Additionally, step [3530] of the example [3500] of the lighting control method includes placing the second control facility [2206] in control of a second visible-light source [2316] including a second plurality of semiconductor light-emitting devices [2318], [2320], [2322] being spaced apart from and along the longitudinal axis [2310]; and includes positioning the second visible-light source [2316] for directing a second beam [2324] of second visible-light emissions being represented by arrows [2326], [2327] from the second plurality of semiconductor light-emitting devices

[2318], [2320], [2322] in a second beam direction also being represented by the arrows [2326], [2327]. Further, step [3530] of the example [3500] of the lighting control method includes placing the third control facility [2207] in control of a third visible-light source [2317] including a third plurality of semiconductor light-emitting devices [2319], [2321], [2323] being spaced apart from and along the longitudinal axis [2310]; and includes positioning the third visible-light source [2317] for directing a third beam [2325] of third visible-light emissions being represented by arrows [2329], [2331] from the third plurality of semiconductor light-emitting devices [2319], [2321], [2323] in a third beam direction also being represented by the arrows [2329], [2331]. At step [3540] of the example [3500] of the lighting control method, the first control facility [2204] is caused to control a first intensity being represented by an arrow [2328] of the first beam [2312] of the first visible-light emissions [2314], [2315]; and the second control facility [2206] is caused to control a second intensity being represented by an arrow [2330] of the second beam [2324] of the second visible light emissions [2326], [2327]; and the third control facility [2207] is caused to control a third intensity being represented by an arrow [2333] of the third beam [2325] of the third visible light emissions [2329], [2331]. Also at step [3540] of the example [3500] of the lighting control method, the control system [2202] is caused to modulate the first intensity [2328] of the first beam [2312] and the second intensity [2330] of the second beam [2324] and the third intensity [2333] of the third beam [2325] in a manner causing the first and second and third beams [2312], [2324], [2325] of the first and second and third visible-light emissions [2314], [2315], [2326], [2327], [2329], [2331] to collectively emulate a progression of ambient sunlight being represented by an arrow [2332]. In some examples [3500], the lighting control method may then end at step [3550].

In some examples [3500] of the lighting control method, step [3540] may include the control system [2202] as causing the first and second and third beams [2312], [2324], [2325] to collectively emulate the progression [2332] of ambient sunlight by initially modulating the first intensity [2328] of the first beam [2312] to relatively be substantially greater than the third intensity [2333] of the third beam [2325] while modulating the third intensity [2333] of the third beam [2325] to relatively be substantially greater than the second intensity [2330] of the second beam [2324], and by then gradually modulating the second intensity [2330] of the second beam [2324] to relatively become substantially greater than the third intensity [2333] of the third beam [2325] while gradually modulating the third intensity [2333] of the third beam [2325] to relatively become substantially greater than the first intensity [2328] of the first beam [2312]. In other examples [3500] of the lighting control method, step [3540] may include the control system [2202] as causing two of the beams [2312], [2324], [2325] among the first and second and third beams [2312], [2324], [2325] to together emulate the progression [2332] of ambient sunlight by initially modulating an intensity [2328], [2330], [2333] of a one of the beams [2312], [2324], [2325] to relatively be substantially greater than another intensity [2328], [2330], [2333] of another one of the beams [2312], [2324], [2325], and by then gradually modulating the another intensity [2328], [2330], [2333] of the another one of the beams [2312], [2324], [2325] to relatively become substantially greater than the intensity [2328], [2330], [2333] of the one of the beams [2312], [2324], [2325].

In further examples [3500] of the lighting control method, step [3540] may include causing the control system [2202] to facilitate an alignment being represented by arrows [2402], [2404] of the first beam [2312] towards a first boundary represented by a dashed line [B1] of an ambient space represented by a dashed box [S] and to facilitate another alignment being represented by arrows [2406], [2408] of the second beam [2324] towards a second boundary represented by a dashed line [B2] of the ambient space [S] being opposite to the first boundary [B1]. In some of those examples [3500] of the lighting control method, step [3540] may include causing the control system [2202] to facilitate the alignment [2402], [2404] of the first beam [2312] as being towards the first boundary [B1] of the ambient space [S] and to facilitate the alignment [2406], [2408] of the second beam [2324] as being towards the second boundary [B2] of the ambient space [S], with each of the first and second beams [2312], [2324] being aligned toward the boundaries [B1] and [B2] as being spaced apart from and on opposite sides of a vertical dashed line [2410] intersecting the longitudinal axis [2310]. As additional examples [3500] of the lighting control method, step [3520] may include providing the control system [2202] as having an indicator [2208] for facilitating an alignment being represented by the arrows [2402], [2404] of the first beam [2312] towards the first boundary [B1] of the ambient space [S] and for facilitating another alignment being represented by the arrows [2406], [2408] of the second beam [2324] towards the second boundary [B2] of the ambient space [S] being opposite to the first boundary [B1]. In some examples [3500] of the lighting control method, step [3540] may include causing the control system [2202] to facilitate an alignment being represented by arrows [2402], [2404] of the first beam [2312] towards an Eastward direction being represented by the dashed line [B1] of the ambient space [S] and to facilitate another alignment being represented by arrows [2406], [2408] of the second beam [2324] towards a Westward direction being represented by the dashed line [B2] of the ambient space [S] being opposite to the Eastward direction [B1]. In further examples [3500] of the lighting control method, step [3520] may include providing the control system [2202] with the indicator [2208] as being for facilitating an alignment being represented by arrows [2402], [2404] of the first beam [2312] towards an Eastward direction being represented by the dashed line [B1] of the ambient space [S] and as being for facilitating another alignment being represented by arrows [2406], [2408] of the second beam [2324] towards a Westward direction being represented by the dashed line [B2] of the ambient space [S] being opposite to the Eastward direction [B1].

In some examples [3500] of the lighting control method, step [3540] may include causing the control system [2202] to modulate the first intensity [2328] of the first beam [2312] and the second intensity [2330] of the second beam [2324] and the third intensity [2333] of the third beam [2325] in a manner for causing the first and second and third beams [2312], [2324], [2325] of the first and second and third visible-light emissions [2314], [2315], [2326], [2327], [2329], [2331] to collectively emulate the progression of ambient sunlight [2332] through a portion of a cycle extending from sunrise being represented by a line [2334] to sunset being represented by a line [2336]; or through a period beginning before sunrise; or through a period ending after sunset; or through a period both beginning before sunrise and ending after sunset. In some examples [3500] of the lighting control method, step [3540]may include causing the control system [2202] to modulate the first intensity [2328] of the first beam [2312] and the second intensity [2330] of the second beam [2324] and the third intensity [2333] of the

third beam [2325] in a manner causing the first and second and third beams [2312], [2324], [2325] of the first and second and third visible-light emissions [2314], [2315], [2326], [2327], [2329], [2331] to collectively emulate the progression of ambient sunlight [2332] throughout the cycle extending from sunrise being represented by the line [2334] to sunset being represented by the line [2336]. In further examples [3500] of the lighting control method, step [3540] may include causing the control system [2202] to modulate the first intensity [2328] of the first beam [2312] and the second intensity [2330] of the second beam [2324] and the third intensity [2333] of the third beam [2325] in a manner causing the first and second and third beams [2312], [2324], [2325] of the first and second and third visible-light emissions [2314], [2315], [2326], [2327], [2329], [2331] to collectively initiate an emulation of the progression of ambient sunlight [2332] when a local sunrise occurs as represented by the line [2334] and to collectively conclude the emulation when a corresponding local sunset occurs as represented by the line [2336]. In some of those examples [3500] of the lighting control method, step [3520] may include providing the control system [2202] as including an ambient light sensor [2210] being programmed for sensing an occurrence of the local sunrise [2334] or an occurrence of the local sunset [2336]. In other examples [3500] of the lighting control method, step [3520] may include providing the control system [2202] as including a programmable user interface [2212]; and step [3540] may include utilizing the programmable user interface [2212] to enter into the control system [2202] an arbitrary selection of a simulated sunrise time [2334] and a simulated sunset time [2336]. In further examples [3500] of the lighting control method, step [3540] may include causing the control system [2202] to modulate the first intensity [2328] of the first beam [2312] and the second intensity [2330] of the second beam [2324] as having a maximum ratio of the first intensity [2328] divided by the second intensity [2330], or as having a maximum ratio of the second intensity [2330] divided by the first intensity [2328], being at least about 10:1. In additional examples [3500] of the lighting control method, step [3540] may include causing the control system [2202] to modulate the first intensity [2328] of the first beam [2312] and the second intensity [2330] of the second beam [2324] as having a maximum ratio of the first intensity [2328] divided by the second intensity [2330], or as having a maximum ratio of the second intensity [2330] divided by the first intensity [2328], being at least about 100:1. In some examples [3500] of the lighting control method, step [3540] may include causing the control system [2202] to modulate the first intensity [2328] of the first beam [2312] in a first range, and to modulate the second intensity [2330] of the second beam [2324] in a second range, and to modulate the third intensity [2333] in a third range, in a manner causing the first and second and third beams [2312], [2324], [2325] of the first and second and third visible-light emissions [2314], [2315], [2326], [2327], [2329], [2331] to collectively emulate the progression of ambient sunlight [2332].

In further examples [3500] of the lighting control method, step [3540] may include causing the control system [2202] to control the first beam [2312] of the first visible-light emissions [2314], [2315] as having a first baseline intensity being represented by an arrow [2338] and to control the second beam [2324] of the second visible-light emissions [2326], [2327] as having a second baseline intensity being represented by an arrow [2340] and to control the third beam [2325] of the third visible-light emissions [2329], [2331] as having a third baseline intensity being represented by an arrow [2341]. Further in those examples [3500] of the lighting control method, step [3540] may include causing control system [2202] to modulate the first intensity [2328] of the first beam [2312] in a first range [2342] being additive to the first baseline intensity [2338] and to modulate the second intensity [2330] of the second beam [2324] in a second range [2344] being additive to the second baseline intensity [2340] and to modulate the third intensity [2333] of the third beam [2325] in a third range [2343] being additive to the third baseline intensity [2341], in a manner causing the first and second and third beams [2312], [2324], [2325] of the first and second and third visible-light emissions [2314], [2315], [2326], [2327], [2329], [2331] to collectively emulate the progression of ambient sunlight [2332].

In additional examples [3500] of the lighting control method, step [3540] may include causing the control system [2202] to control the first baseline intensity [2338] and the second baseline intensity [2340] and the third baseline intensity [2341] for causing the first beam [2312] and the second beam [2324] and the third beam [2325] to collectively form a pre-set baseline pattern of the first and second and third visible-light emissions [2314], [2315], [2326], [2327], [2329], [2331]. As examples [3500] of the lighting control method, step [3540] may include selecting by the control system [2202] among a plurality of different pre-programmed combinations of the baseline intensities [2338], [2340], [2341] for the first visible-light emissions [2314], [2315], the second visible-light emissions [2326], [2327], and the third visible-light emissions [2329], [2331]. In some of those examples [3500] of the lighting control method, step [3540] may include causing the control system [2202] to control the first baseline intensity [2338] and the second baseline intensity [2340] and the third baseline intensity [2341], causing the first beam [2312] and the second beam [2324] and the third beam [2325] to collectively form a pre-set baseline pattern of the first and second and third visible-light emissions [2314], [2315], [2326], [2327], [2329], [2331] being: center wall graze; table with wall-fill; wall wash right; wall wash left; double wall wash; wall wash right plus floor; wall wash left plus floor; room; or batwing.

In further examples [3500] of the lighting control method, step [3540] may include causing the control system [2202] to effectuate a transition, over a selectable time period, of the baseline intensities [2338], [2340], [2341] for the first visible-light emissions [2314], [2315], the second visible-light emissions [2326], [2327], and the third visible-light emissions [2329], [2331] from a one of the plurality of pre-programmed combinations to another one of the plurality of pre-programmed combinations.

In some examples [3500] of the lighting control method, step [3530] may include causing the control system [2202] to have the first control facility [2204] as being coupled as represented by a dashed line [2214] with the first visible-light source [2302] for controlling the first intensity [2328] of the first beam [2312] of the first visible-light emissions [2314], [2315]. In those examples [3500] of the lighting control method, step [3530] may further include causing the control system [2202] to have the second control facility [2206] as being coupled as represented by a dashed line [2216] with the second visible-light source [2316] for controlling the second intensity [2330] of the second beam [2324] of the second visible-light emissions [2326], [2327]. In those examples [3500] of the lighting control method, step [3530] may additionally include causing the control system [2202] to have the third control facility [2207] as being coupled as represented by a dashed line [2218] with the third visible-light source [2317] for controlling the third

intensity [2333] of the third beam [2325] of the third visible-light emissions [2329], [2331].

In other examples [3500] of the lighting control method, step [3540] may include causing the control system [2202] to cause the first control facility [2204] to control the first visible-light source [2302] with the first plurality of semiconductor light-emitting devices [2304], [2306], [2308] being collectively configured for generating the first visible-light emissions [2314], [2315] as having a selectable first perceived color point [2312]. In those examples [3500] of the lighting control method, step [3540] may further include causing the control system [2202] to cause the second control facility [2206] to control the second visible-light source [2316] with the second plurality of semiconductor light-emitting devices [2318], [2320], [2322] being collectively configured for generating the second visible-light emissions [2326], [2327] as having a selectable second perceived color point [2324]. In those examples [3500] of the lighting control method, step [3540] may additionally include causing control system [2202] to cause the third control facility [2207] to control the third visible-light source [2317] with the third plurality of semiconductor light-emitting devices [2319], [2321], [2323] being collectively configured for generating the third visible-light emissions [2329], [2331] as having a selectable third perceived color point [2325].

FIG. 36 is a flow chart of an example [3600] of a lighting control method that may be carried out, as an example, utilizing the lighting controller [2700] discussed earlier in connection with FIGS. 27-31.

Examples [1700], [2200], [2700], [3200], and [3300] of lighting controllers are discussed herein, respectively, in connection with FIGS. 17-21; 22-26; 27-31; 32, 1-4; and 33, 9-12. Examples [3400], [3500], [3600] of lighting control methods are discussed herein, respectively, in connection with FIGS. 34, 17-21; 35, 22-26; and 36, 27-31. Examples [100], [500], [900], [1300], [1800], [2300], [2800], [3700], [4000] of lighting systems that may be utilized together with the example [3600] of the lighting control method are discussed herein, respectively, in connection with FIGS. 1-4; 5-8; 9-12; 13-16; 18-21; 22-26; 27-31; 37-39; and 40-42. It is understood throughout this specification that each one of the examples [1700], [2200], [2700], [3200], [3300] of the lighting controllers may be utilized together with a lighting system [100], [500], [900], [1300], [1800], [2300], [2800], [3700], [4000] including any of the features or combinations of features that are disclosed in connection with any one or more of such lighting systems. It is further understood throughout this specification that each one of the examples [3400], [3500], [3600] of the lighting control methods may be utilized together with any of the examples [1700], [2200], [2700], [3200], [3300] of the lighting controllers, for controlling a lighting system [100], [500], [900], [1300], [1800], [2300], [2800], [3700], [4000] including any of the features or combinations of features that are disclosed in connection with any one or more of such lighting systems. It is additionally understood throughout this specification that a lighting system [100], [500], [900], [1300], [1800], [2300], [2800], [3700], [4000] may include any of the features or combinations of features that are disclosed in connection with any one or more of such lighting systems. Accordingly, FIGS. 1-42 and the entireties of the discussions of the examples [100], [500], [900], [1300], [1800], [2300], [2800], [3700], [4000] of lighting systems and the entireties of the discussions of the examples [1700], [2200], [2700], [3200], [3300] of the lighting controllers and the entireties of the discussions of the examples [3400], [3500], [3600] of lighting control methods are hereby incorporated into the following discussion of the example [3600] of an implementation of the lighting control method.

As shown in FIG. 36 and in FIGS. 27-31, the example [3600] of the implementation of the lighting control method starts at step [3610]. In some examples [3600], the lighting control method may include steps [3620], [3630], and [3640], and may then end at step [3650]. In other examples [3600], the lighting control method may include steps [3620], [3625], [3630], [3635], [3640], and [3645], and may then end at step [3650].

At step [3620], the example [3600] of the lighting control method includes providing a control system [2702] including a first control facility [2704] and a second control facility [2706] and a third control facility [2707].

Step [3630] of the example [3600] of the lighting control method includes placing the first control facility [2704] in control of a first visible-light source [2802] including a first plurality of semiconductor light-emitting devices [2804], [2806], [2808] being spaced apart from and along a longitudinal axis [2810]; and includes positioning the first visible-light source [2802] for directing a first beam [2812] of first visible-light emissions being represented by arrows [2814], [2815] from the first plurality of semiconductor light-emitting devices [2804], [2806], [2808] in a first beam direction also represented by the arrows [2814], [2815]. Additionally, step [3630] of the example [3600] of the lighting control method includes placing the second control facility [2706] in control of a second visible-light source [2816] including a second plurality of semiconductor light-emitting devices [2818], [2820], [2822] being spaced apart from and along the longitudinal axis [2810]; and includes positioning the second visible-light source [2816] for directing a second beam [2824] of second visible-light emissions being represented by arrows [2826], [2827] from the second plurality of semiconductor light-emitting devices [2818], [2820], [2822] in a second beam direction also being represented by the arrows [2826], [2827]. Additionally, step [3630] of the example [3600] of the lighting control method includes placing the third control facility [2707] in control of a third visible-light source [2817] including a third plurality of semiconductor light-emitting devices [2819], [2821], [2823] being spaced apart from and along the longitudinal axis [2810]; and includes positioning the third visible-light source [2817] for directing a third beam [2825] of third visible-light emissions being represented by arrows [2829], [2831] from the third plurality of semiconductor light-emitting devices [2819], [2821], [2823] in a third beam direction also being represented by the arrows [2829], [2831].

At step [3640] of the example [3600] of the lighting control method, the first control facility [2704] is caused to control a first intensity being represented by an arrow [2828] of the first beam [2812] of the first visible-light emissions [2814], [2815]; and the second control facility [2706] is caused to control a second intensity being represented by an arrow [2830] of the second beam [2824] of the second visible light emissions [2826], [2827]; and the third control facility [2707] is caused to control a third intensity being represented by an arrow [2833] of the third beam [2825] of the third visible light emissions [2829], [2831]. Also at step [3640] of the example [3600] of the lighting control method, the control system [2702] may be caused to modulate the first intensity [2828] of the first beam [2812] and the second intensity [2830] of the second beam [2824] and the third intensity [2833] of the third beam [2825] in a manner causing the first and second and third beams [2812], [2824],

[2825] of the first and second and third visible-light emissions [2814], [2815], [2826], [2827], [2829], [2831] to collectively emulate a progression of ambient sunlight being represented by an arrow [2832]. In some examples [3600], the lighting control method may then end at step [3650]. In other examples [3600] of the lighting control method, step [3640] may include the control system [2702] as being caused to modulate an intensity [2828], [2830], [2833] of a one among the beams [2812], [2824], [2825], and to modulate another intensity [2828], [2830], [2833] of another one among the beams [2812], [2824], [2825], in a manner causing the two among the beams [2812], [2824], [2825] of the first and second and third visible-light emissions [2814], [2815], [2826], [2827], [2829], [2831] to collectively emulate the progression of ambient sunlight being represented by the arrow [2832].

In some examples, step [3630] of the lighting control method [3600] may include causing the control system [2702] to have the first control facility [2704] as being coupled as represented by a dashed line [2714] with the first visible-light source [2802] for controlling the first intensity [2828] of the first beam [2812] of the first visible-light emissions [2814], [2815]. In those examples [3600] of the lighting control method, step [3630] may further include causing the control system [2702] to have the second control facility [2706] as being coupled as represented by a dashed line [2716] with the second visible-light source [2816] for controlling the second intensity [2830] of the second beam [2824] of the second visible-light emissions [2826], [2827]. In those examples [3600] of the lighting control method, step [3630] may additionally include causing the control system [2702] to have the third control facility [2707] as being coupled as represented by a dashed line [2718] with the third visible-light source [2817] for controlling the third intensity [2833] of the third beam [2825] of the third visible-light emissions [2829], [2831].

In some examples, the lighting control method [3600] may further include step [3625], step [3635], and step [3645]. In some examples [3600] of the lighting control method, step [3625] may include positioning the first beam direction [2814], [2815] and the second beam direction [2826], [2827] and the third beam direction [2829], [2831] as being down-light beam directions as represented by the arrows [2828], [2830], [2833]. Further in those examples [3600], step [3625] of the lighting control method may include providing the control system [2702] as including a fourth control facility [2718] being coupled with a fourth visible-light source [2916] including a fourth plurality of semiconductor light-emitting devices [2918], [3106], [3002] being spaced apart from and along the longitudinal axis [2810]. Additionally in those examples [3600], step [3635] of the lighting control method may include positioning the fourth visible-light source [2916] for directing a fourth beam [2920] of fourth visible-light emissions being represented by arrows [3114], [3115] from the fourth plurality of semiconductor light-emitting devices [2918], [3106], [3002] in a fourth beam direction also represented by the arrows [3114], [3115], being an up-light beam direction. Further in those examples [3600], step [3625] of the lighting control method may include providing the control system [2702] as including a fifth control facility [2720] being coupled with a fifth visible-light source [2922] including a fifth plurality of semiconductor light-emitting devices [2924], [3120], [3006] being spaced apart from and along the longitudinal axis [2810]. Also in those examples [3600], step [3635] of the lighting control method may include positioning the fifth visible-light source [2922] for directing a fifth beam [2926] of fifth visible-light emissions being represented by arrows [3126], [3127] from the fifth plurality of semiconductor light-emitting devices [2924], [3120], [3006] in a fifth beam direction also represented by the arrows [3126], [3127], being an up-light beam direction. Further in those examples [3600], step [3645] of the lighting control method may include: causing the control system [2702] to cause the fourth control facility [2718] and the fifth control facility [2720] to respectively control a fourth intensity [3128] of the fourth beam [2920] of the fourth visible-light emissions [3114], [3115] and a fifth intensity [3130] of the fifth beam [2926] of the fifth visible-light emissions [3126], [3127]; and causing the control system [2702] to modulate the fourth intensity [3128] of the fourth beam [2920] and the fifth intensity [3130] of the fifth beam [2926]. Additionally in those examples [3600], step [3645] of the lighting control method may include causing the control system [2702] to cause the fourth and fifth beams [2920], [2926] to be collectively synchronized with the progression of ambient sunlight [2832] by initially modulating a fourth intensity [3128] of the fourth beam [2920] to relatively be substantially greater than a fifth intensity [3130] of the fifth beam [2926], and by then gradually modulating the fifth intensity [3130] of the fifth beam [2926] to relatively become substantially greater than the fourth intensity [3128] of the fourth beam [2920].

Further in those examples [3600], step [3625] of the lighting control method may include providing the control system [2702] as including a sixth control facility [2722] being coupled with a sixth visible-light source [2928] including a sixth plurality of semiconductor light-emitting devices [2930], [3121], [3004] being spaced apart from and along the longitudinal axis [2810]. Also in those examples [3600], step [3635] of the lighting control method may include positioning the sixth visible-light source [2928] for directing a sixth beam [2932] of sixth visible-light emissions being represented by arrows [3129], [3131] from the sixth plurality of semiconductor light-emitting devices [2930], [3121], [3004] in a sixth beam direction also represented by the arrows [3129], [3131], being an up-light beam direction. Further in those examples [3600], step [3645] of the lighting control method may include: causing the control system [2702] to cause the fourth control facility [2718] and the fifth control facility [2720] and the sixth control facility [2722] to respectively control a fourth intensity [3128] of the fourth beam [2920] of the fourth visible-light emissions [3114], [3115] and a fifth intensity [3130] of the fifth beam [2926] of the fifth visible-light emissions [3126], [3127] and a sixth intensity [3133] of the sixth beam [2932] of the sixth visible-light emissions [3129], [3131]; and causing the control system [2702] to modulate the fourth intensity [3128] of the fourth beam [2920] and the fifth intensity [3130] of the fifth beam [2926] and the sixth intensity [3133] of the sixth beam [2932]. Additionally in those examples [3600], step [3645] of the lighting control method may include causing the control system [2702] to cause the fourth and fifth and sixth beams [2920], [2926], [2932] to be collectively synchronized with the progression of ambient sunlight [2832] by initially modulating the fourth intensity [3128] of the fourth beam [2920] to relatively be substantially greater than a sixth intensity [3133] of the sixth beam [2932] while modulating the sixth intensity [3133] of the sixth beam [2932] to relatively be substantially greater than the fifth intensity [3130] of the fifth beam [2926]; and by then gradually modulating the fifth intensity [3130] of the fifth beam [2926] to relatively become substantially greater than the sixth intensity [3133] of the sixth beam [2932] while

gradually modulating the sixth intensity [3133] of the sixth beam [2932] to relatively become substantially greater than the fourth intensity [3128] of the fourth beam [2920].

FIG. 37 is a schematic bottom perspective view showing an example [3700] of an implementation of a lighting system. FIG. 38 is a schematic cross-sectional view taken along the line 38-38 showing the example [3700] of the lighting system. FIG. 39 is a schematic top perspective view taken along the line 39 showing the example [3700] of an implementation of a lighting system.

Examples [1700], [2200], [2700], [3200], and [3300] of lighting controllers, that may as examples be utilized together with the lighting systems that are disclosed herein, are discussed herein respectively in connection with FIGS. 17-21; 22-26; 27-31; 32, 1-4; and 33, 9-12. Examples [3400], [3500], and [3600] of lighting control methods are discussed herein, respectively, in connection with FIGS. 34, 17-21; 35, 22-26; and 36, 27-31. Examples [100], [500], [900], [1300], [1800], [2300], [2800], [3700], [4000] of lighting systems are discussed herein, respectively, in connection with FIGS. 1-4; 5-8; 9-12; 13-16; 18-21; 22-26; 27-31; 37-39; and 40-42. It is understood throughout this specification that each one of the examples [1700], [2200], [2700], [3200], [3300] of the lighting controllers may be utilized together with a lighting system [100], [500], [900], [1300], [1800], [2300], [2800], [3700], [4000] including any of the features or combinations of features that are disclosed in connection with any one or more of such lighting systems. It is further understood throughout this specification that each one of the examples [3400], [3500], [3600] of the lighting control methods may be utilized together with any of the examples [1700], [2200], [2700], [3200], [3300] of the lighting controllers, for controlling a lighting system [100], [500], [900], [1300], [1800], [2300], [2800], [3700], [4000] including any of the features or combinations of features that are disclosed in connection with any one or more of such lighting systems. It is additionally understood throughout this specification that a lighting system [100], [500], [900], [1300], [1800], [2300], [2800], [3700], [4000] may include any of the features or combinations of features that are disclosed in connection with any one or more of such lighting systems. Accordingly, FIGS. 1-42 and the entireties of the discussions of the examples [100], [500], [900], [1300], [1800], [2300], [2800], [3700], [4000] of lighting systems and the entireties of the discussions of the examples [1700], [2200], [2700], [3200], [3300] of the lighting controllers and the entireties of the discussions of the examples [3400], [3500], [3600] of lighting control methods are hereby incorporated into the following discussion of the example [3700] of an implementation of the lighting system.

As shown in FIGS. 37-39, the example [3700] of the implementation of the lighting system includes a visible-light source [3702], an optical system [3704], a mounting system [3706], and a control system [3708]. In the example [3700] of the lighting system, the visible-light source [3702] includes a plurality of semiconductor light-emitting devices [3710], [3712], [3714]. The visible-light source [3702] in the example [3700] of the lighting system selectably generates visible-light emissions [3716], [3718] having a cyan-ish color point. In the example [3700] of the lighting system, the visible-light source [3702] also selectably generates visible-light emissions [3716], [3718] having an orange-ish color point. In the example [3700] of the lighting system, the optical system [3704] is integrated with the visible-light source [3702]. Further in the example [3700] of the lighting system, the optical system [3704] is arranged to combine together, into combined light emissions [3716], [3718], visible-light emissions [3716], [3718] from semiconductor light-emitting devices [3710], [3712], [3714] among the plurality of the semiconductor light-emitting devices [3710], [3712], [3714]. In the example [3700] of the lighting system, the mounting system [3706] is integrated with the visible-light source [3702], and the mounting system [3706] is arranged for directing the combined light emissions [3716], [3718] as being up-light emissions. Further in the example [3700] of the lighting system, the control system [3708] is coupled with the visible-light source [3702], and the control system [3708] selectably causes the visible-light emissions [3716], [3718] to have a cyan-ish color point or an orange-ish color point. Additionally in the example [3700] of the lighting system, the control system [3708] and the optical system [3704] cooperatively form the combined up-light emissions [3716], [3718] as having a dynamic spectrum for emulating an orange-ish sky color at a time of day selected to represent a sunrise sky or at a time of day selected to represent a sunset sky, and changing over time for emulating a cyan-ish sky color at another time of day selected to represent a mid-day sky.

In the example [3700] of the lighting system, the cyan-ish color point is a perceived color point having a dominant wavelength being within a range of between about 480 nanometers and about 540 nanometers. In some examples [3700] of the lighting system, the cyan-ish color point is a blue, cyan, or green perceived color point having a dominant wavelength being within a range of between about 480 nanometers and about 540 nanometers.

In the example [3700] of the lighting system, the orange-ish color point is a perceived color point having a dominant wavelength being within a range of between about 575 nanometers and about 620 nanometers. In some examples [3700] of the lighting system, the orange-ish color point is a yellow, amber, yellow-orange, orange, or red-orange perceived color point having a dominant wavelength being within a range of between about 575 nanometers and about 620 nanometers

In some examples [3700] of the lighting system, the control system [3708] may be configured for causing the visible-light emissions [3716], [3718] to have the orange-ish color point as emulating the sunrise sky at an emulated sunrise or as emulating the sunset sky at an emulated sunset, and for causing the visible-light emissions [3716], [3718] to have the cyan-ish color point as emulating the mid-day sky at an emulated mid-day. In further examples [3700] of the lighting system, the control system [3708] may be configured for causing the visible-light source [3702] to selectably generate the visible-light emissions [3716], [3718] having the cyan-ish color point as further having a relatively greater level of input power at an emulated mid-day and as additionally having a relatively lesser level of input power at an emulated sunrise or at an emulated sunset. Further in examples [3700] of the lighting system, the control system [3708] may be configured for causing the visible-light source [3702] to selectably generate the visible-light emissions [3716], [3718] having the orange-ish color point as further having a relatively lesser level of input power at an emulated mid-day and as additionally having a relatively greater level of input power at an emulated sunrise or at an emulated sunset. In some examples [3700] of the lighting system, the plurality of the semiconductor light-emitting devices [3710], [3712], [3714] may include a lumiphor configured for down-converting visible-light emissions [3716], [3718] of a one of the semiconductor light-emitting devices [3710], [3712], [3714] having a first dominant

wavelength into further visible-light emissions [3716], [3718] having a second dominant wavelength being less than the first dominant wavelength to generate the cyan-ish color point. In some examples [3700] of the lighting system, the plurality of the semiconductor light-emitting devices [3710], [3712], [3714] may include three semiconductor light-emitting devices [3710], [3712], [3714] being mutually spaced apart by the visible-light source [3702] in a linear array, and the control system [3708] may separately provide input power for driving each one of the three of the semiconductor light-emitting devices [3710], [3712], [3714].

In other examples [3700] of the lighting system, the plurality of the semiconductor light-emitting devices [3710], [3712], [3714] may further include three elongated strings [3719], [3720], [3721] each including a plurality of the semiconductor light-emitting devices. In some of those examples [3700] of the lighting system, the elongated string [3719] may include the semiconductor light-emitting devices [3710], [3712], [3714], and the elongated string [3720] may include semiconductor light-emitting devices [3722], [3724], and [3726], and the elongated string [3721] may include semiconductor light-emitting devices [3728], [3730], and [3732]. Further in those examples [3700] of the lighting system, the three elongated strings [3719], [3720], [3721] may be mutually spaced apart by the visible-light source [3702] as each respectively including one of three linear arrays [3719], [3720], [3721], and the control system [3708] may separately provide input power for driving each one of the three elongated strings [3719], [3720], [3721] of the semiconductor light-emitting devices [3710], [3712], [3714], [3722], [3724], [3726], [3728], [3730], and [3732].

FIG. **40** is a schematic bottom perspective view showing an example [4000] of an implementation of a lighting system. FIG. **41** is a schematic cross-sectional view taken along the line **41-41** showing the example [4000] of the lighting system. FIG. **42** is a schematic top perspective view taken along the line **42** showing the example [4000] of an implementation of a lighting system.

Examples [1700], [2200], [2700], [3200], and [3300] of lighting controllers, that may as examples be utilized together with the lighting systems that are disclosed herein, are discussed herein respectively in connection with FIGS. **17-21**; **22-26**; **27-31**; **32**, **1-4**; and **33**, **9-12**. Examples [3400], [3500], and [3600] of lighting control methods are discussed herein, respectively, in connection with FIGS. **34**, **17-21**; **35**, **22-26**; and **36**, **27-31**. Examples [100], [500], [900], [1300], [1800], [2300], [2800], [3700], [4000] of lighting systems are discussed herein, respectively, in connection with FIGS. **1-4**; **5-8**; **9-12**; **13-16**; **18-21**; **22-26**; **27-31**; **37-39**; and **40-42**. It is understood throughout this specification that each one of the examples [1700], [2200], [2700], [3200], [3300] of the lighting controllers may be utilized together with a lighting system [100], [500], [900], [1300], [1800], [2300], [2800], [3700], [4000] including any of the features or combinations of features that are disclosed in connection with any one or more of such lighting systems. It is further understood throughout this specification that each one of the examples [3400], [3500], [3600] of the lighting control methods may be utilized together with any of the examples [1700], [2200], [2700], [3200], [3300] of the lighting controllers, for controlling a lighting system [100], [500], [900], [1300], [1800], [2300], [2800], [3700], [4000] including any of the features or combinations of features that are disclosed in connection with any one or more of such lighting systems. It is additionally understood throughout this specification that a lighting system [100], [500], [900], [1300], [1800], [2300], [2800], [3700], [4000] may include any of the features or combinations of features that are disclosed in connection with any one or more of such lighting systems. Accordingly, FIGS. **1-42** and the entireties of the discussions of the examples [100], [500], [900], [1300], [1800], [2300], [2800], [3700], [4000] of lighting systems and the entireties of the discussions of the examples [1700], [2200], [2700], [3200], [3300] of the lighting controllers and the entireties of the discussions of the examples [3400], [3500], [3600] of lighting control methods are hereby incorporated into the following discussion of the example [4000] of an implementation of the lighting system.

As shown in FIGS. **40-42**, the example [4000] of the implementation of the lighting system includes a visible-light source [4002], an optical system [4004], a mounting system [4006], and a control system [4008]. In the example [4000] of the lighting system, the visible-light source [4002] includes a plurality of semiconductor light-emitting devices [4010], [4012], [4014]. The visible-light source [4002] in the example [4000] of the lighting system selectably generates visible-light emissions [4016], [4018] having a cyan-ish color point. In the example [4000] of the lighting system, the visible-light source [4002] also selectably generates visible-light emissions [4016], [4018] having an orange-ish color point. In the example [4000] of the lighting system, the optical system [4004] is integrated with the visible-light source [4002]. Further in the example [4000] of the lighting system, the optical system [4004] is arranged to combine together, into combined light emissions [4016], [4018], visible-light emissions [4016], [4018] from semiconductor light-emitting devices [4010], [4012], [4014] among the plurality of the semiconductor light-emitting devices [4010], [4012], [4014]. In the example [4000] of the lighting system, the mounting system [4006] is integrated with the visible-light source [4002], and the mounting system [4006] is arranged for directing the combined light emissions [4016], [4018] as being up-light emissions. Further in the example [4000] of the lighting system, the control system [4008] is coupled with the visible-light source [4002], and the control system [4008] selectably causes the visible-light emissions [4016], [4018] to have a cyan-ish color point or an orange-ish color point. Additionally in the example [4000] of the lighting system, the control system [4008] and the optical system [4004] cooperatively form the combined up-light emissions [4016], [4018] as having a dynamic spectrum for emulating an orange-ish sky color at a time of day selected to represent a sunrise sky or at a time of day selected to represent a sunset sky, and changing over time for emulating a cyan-ish sky color at another time of day selected to represent a mid-day sky.

In the example [4000] of the lighting system, the cyan-ish color point is a perceived color point having a dominant wavelength being within a range of between about 480 nanometers and about 540 nanometers. In some examples [4000] of the lighting system, the cyan-ish color point is a blue, cyan, or green perceived color point having a dominant wavelength being within a range of between about 480 nanometers and about 540 nanometers.

In the example [4000] of the lighting system, the orange-ish color point is a perceived color point having a dominant wavelength being within a range of between about 575 nanometers and about 620 nanometers. In some examples [4000] of the lighting system, the orange-ish color point is a yellow, amber, yellow-orange, orange, or red-orange perceived color point having a dominant wavelength being within a range of between about 575 nanometers and about 620 nanometers

In some examples [4000] of the lighting system, the control system [4008] may be configured for causing the visible-light emissions [4016], [4018] to have the orange-ish color point as emulating the sunrise sky at an emulated sunrise or as emulating the sunset sky at an emulated sunset, and for causing the visible-light emissions [4016], [4018] to have the cyan-ish color point as emulating the mid-day sky at an emulated mid-day. In further examples [4000] of the lighting system, the control system [4008] may be configured for causing the visible-light source [4002] to selectably generate the visible-light emissions [4016], [4018] having the cyan-ish color point as further having a relatively greater level of input power at an emulated mid-day and as additionally having a relatively lesser level of input power at an emulated sunrise or at an emulated sunset. Further in examples [4000] of the lighting system, the control system [4008] may be configured for causing the visible-light source [4002] to selectably generate the visible-light emissions [4016], [4018] having the orange-ish color point as further having a relatively lesser level of input power at an emulated mid-day and as additionally having a relatively greater level of input power at an emulated sunrise or at an emulated sunset. In some examples [4000] of the lighting system, the plurality of the semiconductor light-emitting devices [4010], [4012], [4014] may include a lumiphor configured for down-converting visible-light emissions [4016], [4018] of a one of the semiconductor light-emitting devices [4010], [4012], [4014] having a first dominant wavelength into further visible-light emissions [4016], [4018] having a second dominant wavelength being less than the first dominant wavelength to generate the cyan-ish color point. In some examples [4000] of the lighting system, the plurality of the semiconductor light-emitting devices [4010], [4012], [4014] may include three semiconductor light-emitting devices [4010], [4012], [4014] being mutually spaced apart by the visible-light source [4002] in a linear array, and the control system [4008] may separately provide input power for driving each one of the three of the semiconductor light-emitting devices [4010], [4012], [4014].

In other examples [4000] of the lighting system, the plurality of the semiconductor light-emitting devices [4010], [4012], [4014] may further include three elongated strings [4019], [4020], [4021] each including a plurality of the semiconductor light-emitting devices. In some of those examples [4000] of the lighting system, the elongated string [4019] may include the semiconductor light-emitting devices [4010], [4012], [4014], and the elongated string [4020] may include semiconductor light-emitting devices [4022], [4024], and [4026], and the elongated string [4021] may include semiconductor light-emitting devices [4028], [4030], and [4032]. Further in those examples [4000] of the lighting system, the three elongated strings [4019], [4020], [4021] may be mutually spaced apart by the visible-light source [4002] as each respectively including one of three linear arrays [4019], [4020], [4021], and the control system [4008] may separately provide input power for driving each one of the three elongated strings [4019], [4020], [4021] of the semiconductor light-emitting devices [4010], [4012], [4014], [4022], [4024], [4026], [4028], [4030], and [4032].

In some examples [4000], the lighting system may include a further visible-light source [4034] including a further plurality of semiconductor light-emitting devices [4036], [4038], [4040], the further visible-light source [4034] generating further visible-light emissions [4042], [4044]. In these examples [4000], the lighting system may include a further optical system [4046] being integrated with the further visible-light source [4034]. Alternatively (not shown) in these examples [4000], the lighting system may include the optical system [3704] as being integrated with both the visible-light source [3702] and with the further visible-light source [4034]. In these examples [4000], the further optical system [4046] may be arranged to combine together, into further combined light emissions, further visible-light emissions [4042], [4044] from semiconductor light-emitting devices [4036], [4038], [4040] among the further plurality of the semiconductor light-emitting devices [4036], [4038], [4040]. As examples [4000], the lighting system may include a further control system [4048] being coupled with the further visible-light source [4034]. In these examples [4000], the lighting system may include a further mounting system [4050] being integrated with the further visible-light source [4034]; and the further mounting system [4050] may be arranged for directing the further combined light emissions [4042], [4044] as being down-light emissions. Alternatively (not shown) in these examples [4000], the lighting system may include the mounting system [3706] as being integrated with both the visible-light source [3702] and the further visible-light source [4034]. In some examples [4000] of the lighting system, the further visible-light source [4034] may be adapted to selectively generate warm white light and cool white light. As further examples [4000] of the lighting system, the further control system [4048] and the further optical system [4046] may cooperatively form the further combined down-light emissions [4042], [4044] as having another dynamic spectrum including a warm to very warm white color point for emulating the sunrise sky or for emulating the sunset sky, and including a cool to very cool white color point for emulating the mid-day sky. In some examples [4000] of the lighting system, the further control system [4048] may cause the further visible-light source [4034] to dynamically change the combined down-light emissions [4042], [4044] from warm white light to cool white light in coordination with the combined up-light emissions [4016], [4018] as changing over time between emulating the sunrise or sunset sky and emulating the mid-day sky. In other examples [4000] of the lighting system, the further control system may be for causing the combined down-light emissions [4042], [4044] of the further plurality of the semiconductor light-emitting devices [4036], [4038], [4040] to have the warm white color point with a correlated color temperature (CCT) as being within a range of between about 1800K and about 3500K at the emulated sunrise sky or at the emulated sunset sky. In some examples [4000] of the lighting system, the further control system [4048] may be for causing the combined down-light emissions [4042], [4044] of the further plurality of the semiconductor light-emitting devices [4036], [4038], [4040] to have the cool white color point with a correlated color temperature (CCT) as being within a range of between about 3500K and about 10000K at the emulated midday sky.

In further examples [4000] of the lighting system, the further plurality of the semiconductor light-emitting devices [4036], [4038], [4040] may include three further semiconductor light-emitting devices [4036], [4038], [4040] being mutually spaced apart by the further visible-light source [4034] in a further linear array, and the further control system [4034] may separately provide input power for driving each one of the three of the further semiconductor light-emitting devices [4036], [4038], [4040] for respectively producing distributions of the further visible-light emissions [4034] as being left wall wash, center wall graze, and right wall wash. In some of those examples [4000] of the lighting system, the further control system [4034] may include a plurality of selectable pre-set input power distri-

butions defining levels of relative input power for each one of the three of the further semiconductor light-emitting devices.

In other examples [4000] of the lighting system, the further plurality of the semiconductor light-emitting devices [4036], [4038], [4040] includes three elongated strings [4052], [4054], [4056] each including a plurality of the semiconductor light-emitting devices [4036], [4038], [4040]. In some of those examples [4000] of the lighting system, the elongated string [4052] may include the semiconductor light-emitting devices [4036], [4038], [4040], and the elongated string [4054] may include semiconductor light-emitting devices [4058], [4060], and [4062], and the elongated string [4056] may include semiconductor light-emitting devices [4064], [4066], and [4068]. Further in those examples [4000] of the lighting system, the three elongated strings [4052], [4054], [4056] may be mutually spaced apart by the further visible-light source [4034] as each respectively including one of three linear arrays [4052], [4054], [4056], and the further control system [4048] may separately provide input power for driving each one of the three elongated strings [4052], [4054], [4056] of the semiconductor light-emitting devices [4036], [4038], [4040], [4058], [4060], [4062], [4064], [4066], and [4068]. In some examples [4000] of the lighting system, the further control system [4048] may separately provide the input power for driving each one of the three elongated strings [4052], [4054], [4056] of the semiconductor light-emitting devices [4036], [4038], [4040], [4058], [4060], [4062], [4064], [4066], and [4068] for respectively producing distributions of the further visible-light emissions [4034] as being left wall wash, center wall graze, and right wall wash. In other examples [4000] of the lighting system, the further control system [4034] may include a plurality of selectable pre-set input power distributions defining further levels of relative input power for each one of the three of the elongated strings [4052], [4054], [4056] of the further semiconductor light-emitting devices [4036], [4038], [4040], [4058], [4060], [4062], [4064], [4066], and [4068]. In additional examples [4000] of the lighting system, the further control system [4034] may include, among the plurality of the selectable pre-set input power distributions: wall graze; table lighter with wall fill; wall wash right; wall wash left; double wall wash; wall wash right plus floor; wall wash left plus floor; low glare room lighter; or low glare quasi-batwing. In further examples [4000] of the lighting system, the further control system [4048] may separately provide the input power for driving each one of the three elongated strings [4052], [4054], [4056] of the semiconductor light-emitting devices [4036], [4038], [4040], [4058], [4060], [4062], [4064], [4066], and [4068] for producing the pre-set input power distributions of the further visible-light emissions [4034] for mimicking movement of the sun across the sky to affect circadian rhythms, by progressing over time from being: left wall wash at an emulated sunrise; to center wall graze at an emulated midday; to right wall wash at an emulated sunset.

FIG. **43** is a schematic side view showing an example [4300] of an implementation of a lighting system.

Examples [1700], [2200], [2700], [3200], and [3300] of lighting controllers, that may as examples be utilized together with the lighting systems that are disclosed herein, are discussed herein respectively in connection with FIGS. **17-21**; **22-26**; **27-31**; **32**, **1-4**; and **33**, **9-12**. Examples [3400], [3500], and [3600] of lighting control methods are discussed herein, respectively, in connection with FIGS. **34**, **17-21**; **35**, **22-26**; and **36**, **27-31**. Examples [100], [500], [900], [1300], [1800], [2300], [2800], [3700], [4000], [4300] of lighting systems are discussed herein, respectively, in connection with FIGS. **1-4**; **5-8**; **9-12**; **13-16**; **18-21**; **22-26**; **27-31**; **37-39**; **40-42**; and **43**. It is understood throughout this specification that each one of the examples [1700], [2200], [2700], [3200], [3300] of the lighting controllers may be utilized together with a lighting system [100], [500], [900], [1300], [1800], [2300], [2800], [3700], [4000], [4300] including any of the features or combinations of features that are disclosed in connection with any one or more of such lighting systems. It is further understood throughout this specification that each one of the examples [3400], [3500], [3600] of the lighting control methods may be utilized together with any of the examples [1700], [2200], [2700], [3200], [3300] of the lighting controllers, for controlling a lighting system [100], [500], [900], [1300], [1800], [2300], [2800], [3700], [4000], [4300] including any of the features or combinations of features that are disclosed in connection with any one or more of such lighting systems. It is additionally understood throughout this specification that a lighting system [100], [500], [900], [1300], [1800], [2300], [2800], [3700], [4000], [4300] may include any of the features or combinations of features that are disclosed in connection with any one or more of such lighting systems. Accordingly, FIGS. **1-43** and the entireties of the discussions of the examples [100], [500], [900], [1300], [1800], [2300], [2800], [3700], [4000], [4300] of lighting systems and the entireties of the discussions of the examples [1700], [2200], [2700], [3200], [3300] of the lighting controllers and the entireties of the discussions of the examples [3400], [3500], [3600] of lighting control methods are hereby incorporated into the following discussion of the example [4300] of an implementation of the lighting system.

As shown in FIG. **43**, the example [4300] of the implementation of the lighting system includes a visible-light source [4302], an optical system [4304], a mounting system [4306], and a control system [4308]. In the example [4300] of the lighting system, the visible-light source [4302] includes a plurality of semiconductor light-emitting devices [4310], the visible-light source [4302] being arranged for generating a plurality of visible-light emissions represented by arrows [4312], [4314], [4316], [4318] having a range of selectable color points including a cool to very cool white color point for daytime and a warm to very warm white color point for nighttime. In the example [4300] of the lighting system, the optical system [4304] is integrated with the visible-light source [4302], the optical system [4304] being arranged for causing some of the visible-light emissions [4312], [4314], [4316], [4318] to have a range of selectable beam widths including a relatively wide beam width [4320] and a relatively narrow beam width [4322]. In the example [4300] of the lighting system, the mounting system [4306] is integrated with the visible-light source [4302] and the optical system [4304], the mounting system [4306] being arranged for causing some of the visible-light emissions [4312], [4314], [4316], [4318] to have a range of selectable beam directions [4312], [4314], [4316], [4318]. The control system [4308] of the example [4300] of the lighting system is integrated with the visible-light source [4302] and the optical system [4304] and the mounting system [4306], the control system [4308] selectably causing the visible-light emissions [4312], [4314], [4316], [4318] to include a daytime configuration having the cool to very cool white color point and the relatively wide beam width [4320], and to include a nighttime configuration having the warm to very warm white color point and the relatively narrow beam width [4322]. In the example [4300] of the lighting system,

the daytime configuration includes the control system [4308] as causing the visible-light emissions [4312], [4314], [4316], [4318] to include lateral-light emissions [4312], [4316] or up-light emissions [4314], [4318], the daytime configuration promoting a relatively high equivalent melanopic lux. Further in the example [4300] of the lighting system, the nighttime configuration may include the control system [4308] as causing the visible-light emissions [4312], [4314], [4316], [4318] to include down-light emissions being represented by arrows [4324], [4325], the nighttime configuration promoting a relatively low equivalent melanopic lux.

In some examples [4300] of the lighting system, the control system [4308] may be arranged for causing the visible-light source [4302] to selectably generate some of the visible-light emissions [4312], [4314], [4316], [4318], [4324], [4325] having the cool to very cool white color point as having a relatively high level of light output intensity, and to selectably generate some of the visible-light emissions [4312], [4314], [4316], [4318], [4324], [4325] having the warm to very warm white color point as having a relatively low level of light output intensity.

In further examples [4300] of the lighting system, the control system [4308] may be for dimming some of the visible-light emissions [4312], [4314], [4316], [4318], [4324], [4325] from having the cool to very cool white color point and the relatively high level of light output intensity, to having the warm to very warm white color point and the relatively low level of light output intensity. Examples of suitable systems for dimming the visible-light emissions [4312], [4314], [4316], [4318], [4324], [4325] of the visible-light source [4302] are disclosed in the commonly-owned Petluri et al., U.S. Pat. No. 10,477,636 entitled "Lighting Systems Having Multiple Light Sources", issued on Nov. 12, 2019, the entirety of which hereby is incorporated by reference herein.

In additional examples [4300] of the lighting system, the control system [4308] may be for dimming some of the visible-light emissions [4312], [4314], [4316], [4318], [4324], [4325] while causing the beam width [4320], [4322] to become relatively narrower and causing a beam angle direction [4326], [4328] of the visible-light emissions [4312], [4314], [4316], [4318], [4324], [4325] to change from a wall wash beam direction [4326] to a wall graze beam direction [4328]. In further examples [4300] of the lighting system, the control system may be for cycling some of the visible-light emissions [4312], [4314], [4316], [4318], [4324], [4325] between the daytime configuration having the cool to very cool white color point and the relatively wide beam width [4320] and the wall wash beam direction [4326], and the nighttime configuration having the warm to very warm white color point and the relatively narrow beam width [4322] and the wall graze beam direction [4328]. In additional examples [4300] of the lighting system, the optical system [4304], being arranged for causing some of the visible-light emissions [4312], [4314] to have the relatively wide beam width [4320], may include causing an increase of a vertical illuminance of some of those visible-light emissions [4312], [4314] in a wall wash beam direction [4326].

In some examples [4300], the mounting system [4306] may be for positioning the visible-light source [4302] as facing toward a down-light direction [4324], [4325] for causing some of the visible-light emissions [4312], [4314], [4316], [4318], [4324], [4325] to be directed in a wall wash beam direction [4326] or a wall graze beam direction [4328]. In some of those examples [4300], the visible-light source [4302] may be for positioning some of the plurality of the semiconductor light-emitting devices [4310] for generating directional visible-light emissions in a wall wash beam direction [4326] or a wall graze beam direction [4328]. In further of those examples [4300], the range of selectable beam directions [4326], [4328] may include a wall wash beam direction [4326] or a wall graze beam direction [4328]. In additional examples [4300], the relatively narrow beam angle [4322] may be within a range of between about five (5) degrees to about forty-five (45) degrees; and the relatively wide beam angle [4320] may be within a range of between about forty-six (46) degrees and about one hundred and twenty (120) degrees.

In additional examples [4300] of the lighting system, the daytime configuration may include the control system [4308] as causing the visible-light emissions [4312], [4314], [4316], [4318], [4324], [4325] to have sufficient circadian-effective light (Circadian Illuminance; CLA) and to have a spectral irradiance distribution of visible-light emissions [4312], [4314], [4316], [4318], [4324], [4325] incident at the cornea of a user being weighted to reflect the spectral sensitivity of the human circadian system as measured by acute melatonin suppression after a one-hour exposure, and to have a consequent CS value being the effectiveness of the spectrally weighted irradiance at the cornea, of at least about 0.3.

In further examples [4300] of the lighting system, the daytime configuration may include the control system [4308] as causing the visible-light emissions [4312], [4314], [4316], [4318], [4324], [4325] to include lateral-light emissions [4312], [4316] being laterally directed toward a wall [W1], [W2] or being downwardly or laterally directed as represented by an arrow [4330] toward an object [O] being located in an ambient space [A], or to include up-light emissions [4314], [4318] being upwardly directed toward a ceiling [C] of the ambient space [A]. Additionally in those examples [4300] of the lighting system, the mounting system [4306] may be for causing some of the visible-light emissions [4312], [4314], [4316], [4318], [4324], [4325], [4330] to be laterally directed [4312], [4316] toward the wall [W1], [W2] or being laterally or downwardly directed as represented by the arrow [4330] toward the object [O], or to be upwardly directed toward the ceiling [C]. Further in those examples [4300] of the lighting system, the mounting system [4306] may be structured for mounting the lighting system [4300] on a ceiling [C] for directing some of the visible-light emissions [4312], [4316] in a lateral direction. Additionally in the example [4300] of the lighting system, the mounting system [4306] may be structured for mounting the lighting system [4300] on a wall [W1], [W2] for directing some of the visible-light emissions [4312], [4314], [4316], [4318], [4330] in a lateral or upward direction.

In some examples [4300] of the lighting system, the nighttime configuration may include the control system [4308] as causing the visible-light emissions [4312], [4314], [4316], [4318], [4330] to include down-light emissions [4324], [4325] being downwardly directed toward an object [0] or a floor [F]. Further in those examples [4300] of the lighting system, the mounting system [4306] may be for causing some of the visible-light emissions [4324], [4325] to be downwardly directed toward the object [O] or the floor [F]. Additionally in those examples [4300] of the lighting system, the mounting system [4306] may be structured for mounting the lighting system [4300] on the ceiling [C] for directing some of the visible-light emissions [4324], [4325] in a downward direction.

In further examples, the lighting system [4300] may include a visible-light source [4332], an optical system [4334], and a mounting system [4336], and the mounting system [4336] may be structured for mounting the visible-light source [4332] and the optical system [4334] on a wall [W1], [W2] for directing some of the visible-light emissions being represented by an arrow [4338] in a downward direction or for directing some of the visible-light emissions in a lateral direction being represented by an arrow [4340]. In some of those further examples [4300], the visible-light sources [4302], [4332] and the optical systems [4304], [4334] may all be integrated with the control system [4308]. In others of those further examples [4300] (not shown), the visible-light source [4302] and the optical system [4304] may be omitted; and the visible-light source [4322] and the optical system [4334] may be integrated with the control system [4308].

In additional examples [4300] of the lighting system, the control system may be for causing some of the visible-light emissions [4312], [4314], [4316], [4318], [4324], [4325], [4330] to have the warm white color point with a correlated color temperature (CCT) as being within a range of between about 1800K and about 3100K. In other examples [4300], the control system [4308] may be for causing some of the visible-light emissions [4312], [4314], [4316], [4318], [4324], [4325], [4330] to have the cool white color point with a correlated color temperature (CCT) as being within a range of between about 3101K and about 10000K.

In some examples [4300], the control system [4308] may be arranged for selectably causing the visible-light source [4302] to generate some of the visible-light emissions [4312], [4314], [4316], [4318], [4324], [4325], [4330] with the warm to very warm white color point as not having a cyan-ish dominant wavelength being within a range of between about 480 nanometers and about 540 nanometers. In further examples [4300], the control system [4308] may be arranged for causing the visible-light source [4302] to generate some of the visible-light emissions [4312], [4314], [4316], [4318], [4324], [4325], [4330] with the cool to very cool white color point as having a cyan-ish dominant wavelength being within a range of between about 480 nanometers and about 540 nanometers. In additional examples [4300], the control system [4308] may be arranged for causing the visible-light emissions [4312], [4314], [4316], [4318], [4324], [4325], [4330] in the nighttime configuration to have less than about 80 microWatts per lumen of power in a wavelength range of between about 440 nanometers and about 495 nanometers. In other examples [4300], the control system [4308] may be arranged for causing the visible-light emissions [4312], [4314], [4316], [4318], [4324], [4325], [4330] in the daytime configuration to have more than about 800 microWatts per lumen of power in a wavelength range of between about 440 nanometers and about 495 nanometers.

In some examples [4300] of the lighting system, the daytime configuration may include the control system [4308] as causing the visible-light emissions [4312], [4314], [4316], [4318], [4324], [4325], [4330] to include lateral-light emissions [4312], [4316], [4340] or up-light emissions [4314], [4318], the daytime configuration promoting the relatively high equivalent melanopic lux as being within a range of between about 200/1000 and about 525/1000. In further examples [4300] of the lighting system, the nighttime configuration may include the control system [4308] as causing the visible-light emissions [4312], [4314], [4316], [4318], [4324], [4325], [4330], [4338], [4340] to include down-light emissions [4324], [4338], the nighttime configuration promoting the relatively low equivalent melanopic lux as being within a range of between about 199/1000 and about 45/1000.

In further examples [4300] of the lighting system (not shown) and referring to the lighting system [3700] as discussed in connection with FIGS. 37-39, the plurality of the semiconductor light-emitting devices [4310] may include three semiconductor light-emitting devices [4310] being mutually spaced apart by the visible-light source [4302] in a linear array. In those examples [4300], the visible-light source [4302] may include the plurality of semiconductor light-emitting devices [4310] as being mutually spaced apart in the same manner as are the plurality of semiconductor light-emitting devices [3710], [3712], [3714] as shown and discussed in connection with FIGS. 37-39.

In additional examples [4300] of the lighting system (not shown) and referring to the lighting system [3700] as discussed in connection with FIGS. 37-39, the plurality of the semiconductor light-emitting devices [4310] may include three elongated strings in the same manner as the three elongated strings [3719], [3720], [3721] are included as shown in the lighting system [3700] shown in FIGS. 37-39, each of the strings including a plurality of the semiconductor light-emitting devices [3710], [3712], [3714], the three elongated strings [3719], [3720], [3721] being mutually spaced apart by the visible-light source [4302] as each respectively including one of three linear arrays [3719], [3720], [3721], and wherein the control system [4308] is for separately providing input power for driving each one of the three elongated strings [3719], [3720], [3721] of the semiconductor light-emitting devices [3710], [3712], [3714].

The lighting systems [100], [500], [900], [1300], [1800], [2300], [2800], [3700], [4000], [4300] may be utilized in order to provide lighting that improves circadian rhythms by a number of combinable factors that may include color points, melanopic lux, beam widths, beam directions, light intensities, circadian luminance, and CS (which is the effectiveness of spectrally weighted irradiance).

While the present invention has been disclosed in a presently defined context, it will be recognized that the present teachings may be adapted to a variety of contexts consistent with this disclosure and the claims that follow. For example, the lighting systems and processes shown in the figures and discussed above can be adapted in the spirit of the many optional parameters described.

We claim:

1. A lighting system, comprising:

a visible-light source including a plurality of semiconductor light-emitting devices, the visible-light source being arranged for generating a plurality of visible-light emissions having a range of selectable color points including a cool to very cool white color point for daytime and a warm to very warm white color point for nighttime;

an optical system integrated with the visible-light source, the optical system being arranged for causing some of the visible-light emissions to have a range of selectable beam widths including a relatively wide beam width and a relatively narrow beam width;

a mounting system integrated with the visible-light source and the optical system, the mounting system being arranged for causing some of the visible-light emissions to have a range of selectable beam directions; and

a control system integrated with the visible-light source and the optical system and the mounting system, the control system selectably causing the visible-light

emissions to include a daytime configuration having the cool to very cool white color point and the relatively wide beam width, and to include a nighttime configuration having the warm to very warm white color point and the relatively narrow beam width;

wherein the daytime configuration includes the control system as causing the visible-light emissions to include lateral-light emissions or up-light emissions, the daytime configuration promoting a relatively high equivalent melanopic lux; and

wherein the nighttime configuration includes the control system as causing the visible-light emissions to include down-light emissions, the nighttime configuration promoting a relatively low equivalent melanopic lux.

2. The lighting system of claim **1**, wherein the control system is arranged for causing the visible-light source to selectably generate some of the visible-light emissions having the cool to very cool white color point as having a relatively high level of light output intensity, and to selectably generate some of the visible-light emissions having the warm to very warm white color point as having a relatively low level of light output intensity.

3. The lighting system of claim **2**, wherein the control system is for dimming some of the visible-light emissions from having the cool to very cool white color point and the relatively high level of light output intensity, to having the warm to very warm white color point and the relatively low level of light output intensity.

4. The lighting system of claim **3**, wherein the daytime configuration includes the control system as causing the visible-light emissions to have sufficient circadian-effective light (Circadian Illuminance; CLA) and to have a spectral irradiance distribution of visible-light emissions incident at the cornea of a user being weighted to reflect the spectral sensitivity of the human circadian system as measured by acute melatonin suppression after a one-hour exposure, and to have a CS value being the effectiveness of the spectrally weighted irradiance at the cornea, of at least about 0.3.

5. The lighting system of claim **3**, wherein the control system is for dimming some of the visible-light emissions while causing the beam width to become relatively narrower and causing a beam angle direction of the visible-light emissions to change from a wall wash beam direction to a wall graze beam direction.

6. The lighting system of claim **1**, wherein the control system is for cycling some of the visible-light emissions between the daytime configuration having the cool to very cool white color point and the relatively wide beam width and a wall wash beam direction, and the nighttime configuration having the warm to very warm white color point and the relatively narrow beam width and a wall graze beam direction.

7. The lighting system of claim **1**, wherein the optical system, being arranged for causing some of the visible-light emissions to have the relatively wide beam width, includes causing an increase of a vertical illuminance of some of the visible-light emissions in a wall wash beam direction.

8. The lighting system of claim **1**, wherein the relatively narrow beam angle is within a range of between about five (5) degrees to about forty-five (45) degrees; and wherein the relatively wide beam angle is within a range of between about forty-six (46) degrees and about one hundred and twenty (120) degrees.

9. The lighting system of claim **1**, wherein the daytime configuration includes the control system as causing the visible-light emissions to include lateral-light emissions being laterally directed toward a wall or being directed toward an object located in an ambient space, or to include up-light emissions being upwardly directed toward a ceiling of the ambient space.

10. The lighting system of claim **9**, wherein the mounting system is for causing some of the visible-light emissions to be laterally directed toward the wall or toward the object or to be upwardly directed toward the ceiling.

11. The lighting system of claim **1**, wherein the nighttime configuration includes the control system as causing the visible-light emissions to include down-light emissions downwardly directed toward an object or a floor.

12. The lighting system of claim **1**, wherein the control system is for causing some of the visible-light emissions to have the warm white color point with a correlated color temperature (CCT) as being within a range of between about 1800K and about 3100K.

13. The lighting system of claim **1**, wherein the control system is for causing some of the visible-light emissions to have the cool white color point with a correlated color temperature (CCT) as being within a range of between about 3101K and about 10000K.

14. The lighting system of claim **1**, wherein the control system is arranged for selectably causing the visible-light source to generate some of the visible-light emissions with the warm to very warm white color point as not having a cyan-ish dominant wavelength being within a range of between about 480 nanometers and about 540 nanometers.

15. The lighting system of claim **1**, wherein the control system is arranged for causing the visible-light source to generate some of the visible-light emissions with the cool to very cool white color point as having a cyan-ish dominant wavelength being within a range of between about 480 nanometers and about 540 nanometers.

16. The lighting system of claim **1**, wherein the control system is arranged for causing the visible-light emissions in the nighttime configuration to have less than about 80 micro Watts per lumen of power in a wavelength range of between about 440 nanometers and about 495 nanometers.

17. The lighting system of claim **1**, wherein the control system is arranged for causing the visible-light emissions in the daytime configuration to have more than about 800 microWatts per lumen of power in a wavelength range of between about 440 nanometers and about 495 nanometers.

18. The lighting system of claim **1**, wherein the daytime configuration includes the control system as causing the visible-light emissions to include lateral-light emissions or up-light emissions, the daytime configuration promoting the relatively high equivalent melanopic lux as being within a range of between about 200/1000 and about 525/1000.

19. The lighting system of claim **1**, wherein the nighttime configuration includes the control system as causing the visible-light emissions to include down-light emissions, the nighttime configuration promoting the relatively low equivalent melanopic lux as being within a range of between about 199/1000 and about 45/1000.

20. The lighting system of claim **1**, wherein the plurality of the semiconductor light-emitting devices includes three elongated strings each including a plurality of the semiconductor light-emitting devices, the three elongated strings being mutually spaced apart by the visible-light source as each respectively including one of three linear arrays, and wherein the control system is for separately providing input power for driving each one of the three elongated strings of the semiconductor light-emitting devices.

* * * * *