US012385650B2

(12) **United States Patent**
Kwag et al.

(10) **Patent No.: US 12,385,650 B2**
(45) **Date of Patent: *Aug. 12, 2025**

(54) **COOKING APPLIANCE**

(71) Applicant: **LG ELECTRONICS INC.**, Seoul (KR)

(72) Inventors: **Dongseong Kwag**, Seoul (KR); **Donghyok Yun**, Seoul (KR); **Hag Soo Kim**, Seoul (KR); **Sung Mun Yoon**, Seoul (KR)

(73) Assignee: **LG ELECTRONICS INC.**, Seoul (KR)

(*) Notice: Subject to any disclaimer, the term of this patent is extended or adjusted under 35 U.S.C. 154(b) by 449 days.

This patent is subject to a terminal disclaimer.

(21) Appl. No.: **17/888,172**

(22) Filed: **Aug. 15, 2022**

(65) **Prior Publication Data**

US 2023/0035341 A1 Feb. 2, 2023

Related U.S. Application Data

(63) Continuation of application No. 16/739,623, filed on Jan. 10, 2020, now Pat. No. 11,454,401.

(30) **Foreign Application Priority Data**

Jan. 11, 2019 (KR) 10-2019-0004169
Apr. 1, 2019 (KR) 10-2019-0038037
Apr. 5, 2019 (KR) 10-2019-0040379

(51) **Int. Cl.**
F24C 15/02 (2006.01)
A47J 37/06 (2006.01)
(Continued)

(52) **U.S. Cl.**
CPC ***F24C 15/02*** (2013.01); ***F24C 15/04*** (2013.01); *A47J 37/0629* (2013.01); *F24C 7/08* (2013.01)

(58) **Field of Classification Search**
CPC .. A47J 37/0629; A47J 37/0623; A47J 27/004; A47J 37/0611; F24C 7/067;
(Continued)

(56) **References Cited**

U.S. PATENT DOCUMENTS

1,690,570 A * 11/1928 Dalbey, Sr. A47J 37/0676 99/425
3,393,295 A 7/1968 Jepson et al.
(Continued)

FOREIGN PATENT DOCUMENTS

CN 202173285 U 3/2012
CN 203328543 U 12/2013
(Continued)

OTHER PUBLICATIONS

Machine Translation of JP H0634137 (Year: 1994).*
Machine Translation of JP 2005030711 (Year: 2005).*
JPH0634137(A) by Sugioka Takanobu, Microwave Oven of Aug. 1994.

Primary Examiner — Steven B McAllister
Assistant Examiner — Amy E Carter
(74) *Attorney, Agent, or Firm* — Bryan Cave Leighton Paisner LLP

(57) **ABSTRACT**

A cooking appliance includes a door frame that supports a heating part and is coupled to a door such that the heating part is disposed at the door.

20 Claims, 34 Drawing Sheets

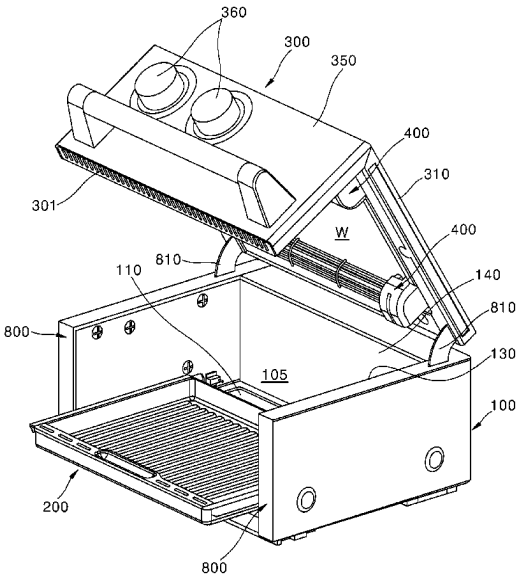

(51) **Int. Cl.**
F24C 7/08 (2006.01)
F24C 15/04 (2006.01)

(58) **Field of Classification Search**
CPC F24C 15/36; F24C 15/162; F24C 15/04; F24C 15/22; H05B 6/129
USPC 219/391, 402
See application file for complete search history.

(56) **References Cited**

U.S. PATENT DOCUMENTS

3,535,999	A *	10/1970	Chambon	A47J 37/041 99/340	
3,746,837	A	7/1973	Frey et al.		
4,403,540	A	9/1983	Erkelenz	A47J 37/0611 99/375	
6,029,649	A	2/2000	Su		
6,097,003	A	8/2000	Markum	F24C 7/06 219/402	
6,111,226	A *	8/2000	Lee	A47J 37/0664 219/393	
6,271,502	B1	8/2001	Lee		
7,285,751	B2 *	10/2007	Li	A47J 37/0629 219/524	
7,301,127	B1	11/2007	Derridinger, Jr.	A47J 37/0709 219/386	
9,492,031	B2	11/2016	Diaz	A47J 37/0704	
9,924,830	B1 *	3/2018	Glucksman	A47J 37/0611	
2005/0252905	A1	11/2005	De'Longhi		
2008/0248157	A1	10/2008	Choi		
2010/0178407	A1	7/2010	Rizzuto et al.		
2012/0031282	A1	2/2012	Kitayama et al.		
2013/0119838	A1	5/2013	Becker et al.		
2022/0087473	A1	3/2022	Kim	F24C 7/067	
2022/0090794	A1	3/2022	Yun	F24C 15/00	

FOREIGN PATENT DOCUMENTS

CN	106821025	A		6/2017	
CN	107131528	A		9/2017	
DE	2145094	A1		3/1973	
EP	0830063	A1		3/1998	
EP	3165990	A1		10/2017	
JP	S53026263			3/1978	
JP	0634137	A		2/1994	
JP	H0634137	A	*	2/1994	F24C 1/00
JP	H07263132	A		10/1995	
JP	2000081213	A		3/2000	
JP	2003114030	A		4/2003	
JP	2005030711	A	*	2/2005	F24C 7/06
JP	3822899	B2		9/2006	
JP	2008039277	A		2/2008	
JP	2017083166	A		5/2017	
JP	2017084814	A		5/2017	
KR	20-1994-0025187	U		11/1994	
KR	10-1995-0019486	A		7/1995	
KR	1019970011605	A		3/1997	
KR	19990048545	A		7/1999	
KR	100227978	B1		8/1999	
KR	20060044217	A		5/2006	
KR	1020060062202	A		6/2006	
KR	10-2008-0024025	A		3/2008	
KR	20080035396	A		4/2008	
KR	10-2009-0063422	A		6/2009	
KR	2020090005892	U		6/2009	
KR	200450168	Y1		9/2010	
KR	1020110008423	A		1/2011	
KR	2020110001565	U		2/2011	
KR	20120140490	A		12/2012	
KR	10-2017-0085727	A		7/2017	
KR	20180080057	A		7/2018	
KR	101881339	B1		8/2018	
WO	97/34490	A1		9/1997	
WO	2008032903	A1		3/2008	

* cited by examiner

FIG. 1

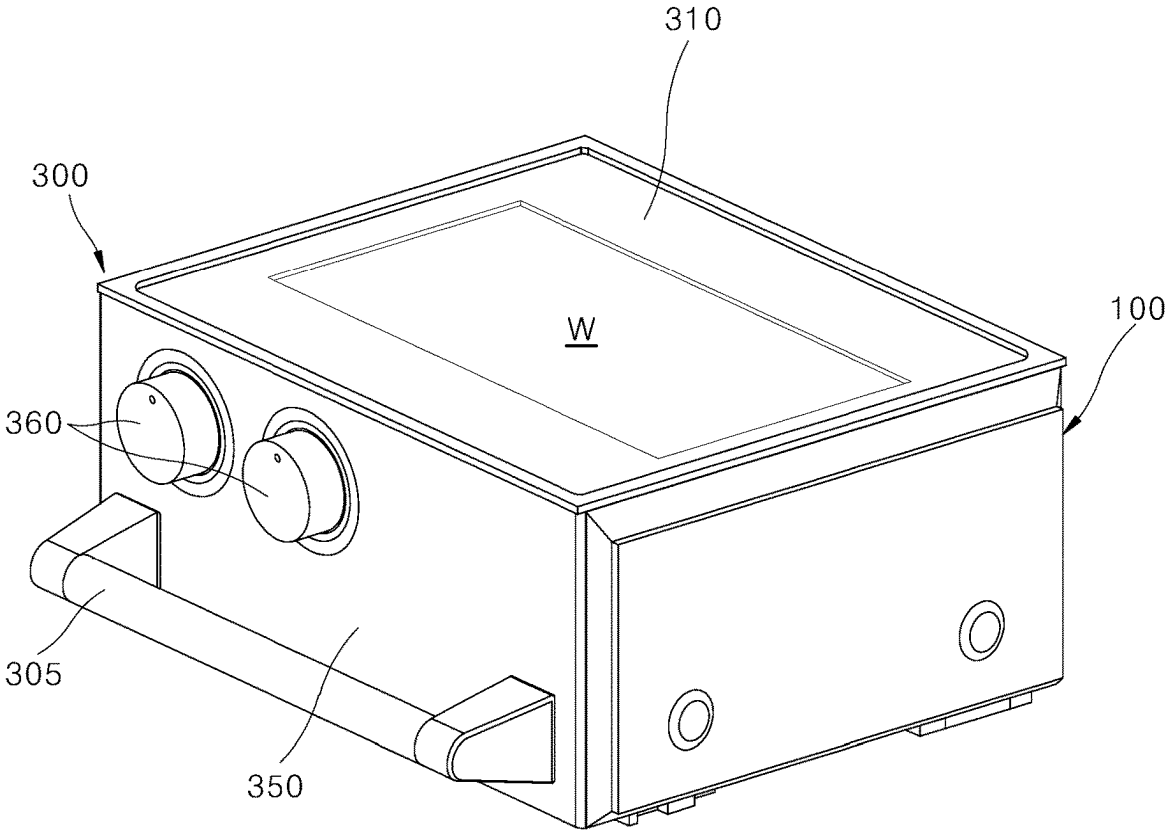

FIG. 2

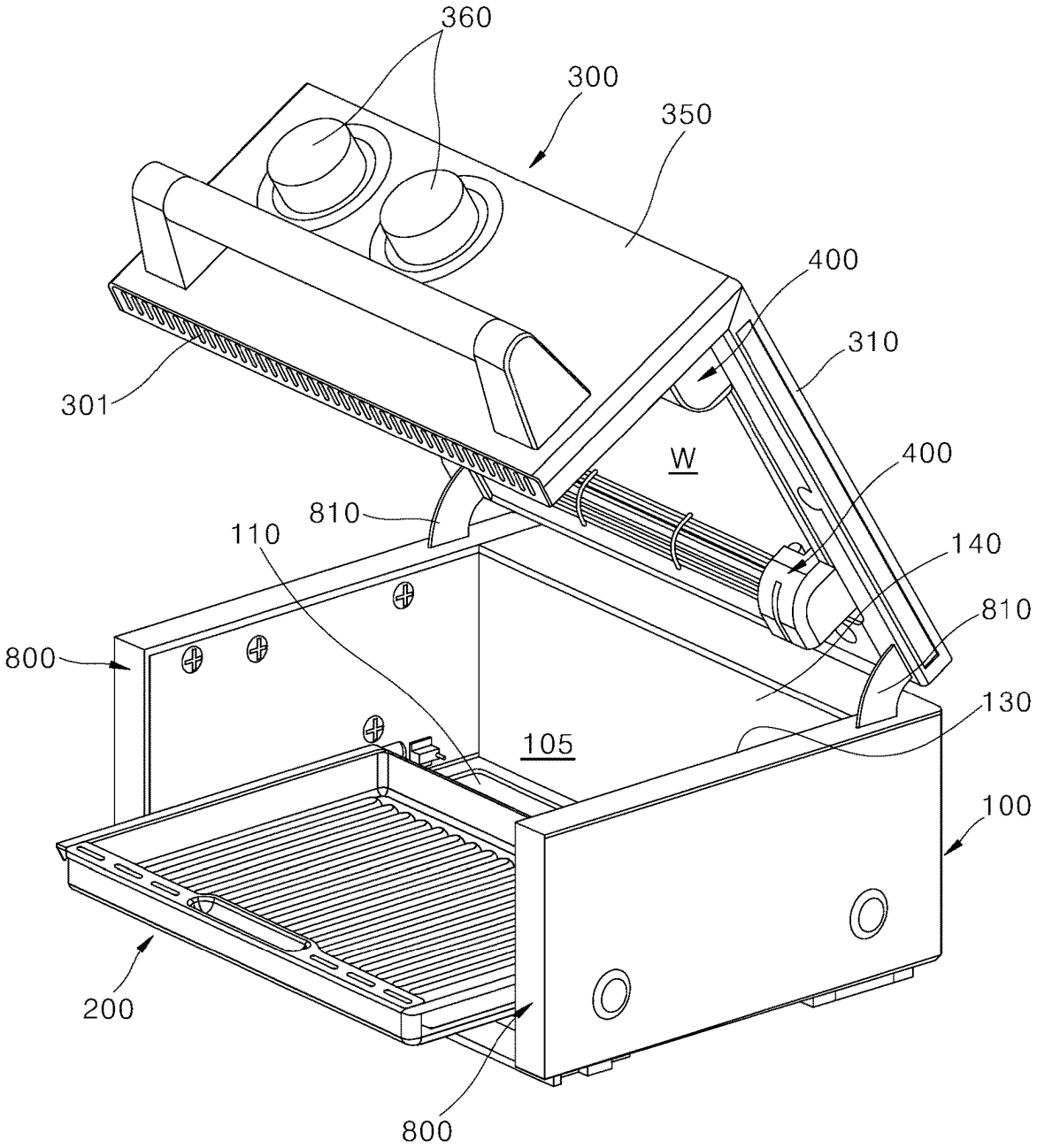
360
300
350
400
310
301
W
400
810
110
140
810
800
130
105
100
200
800

FIG. 3

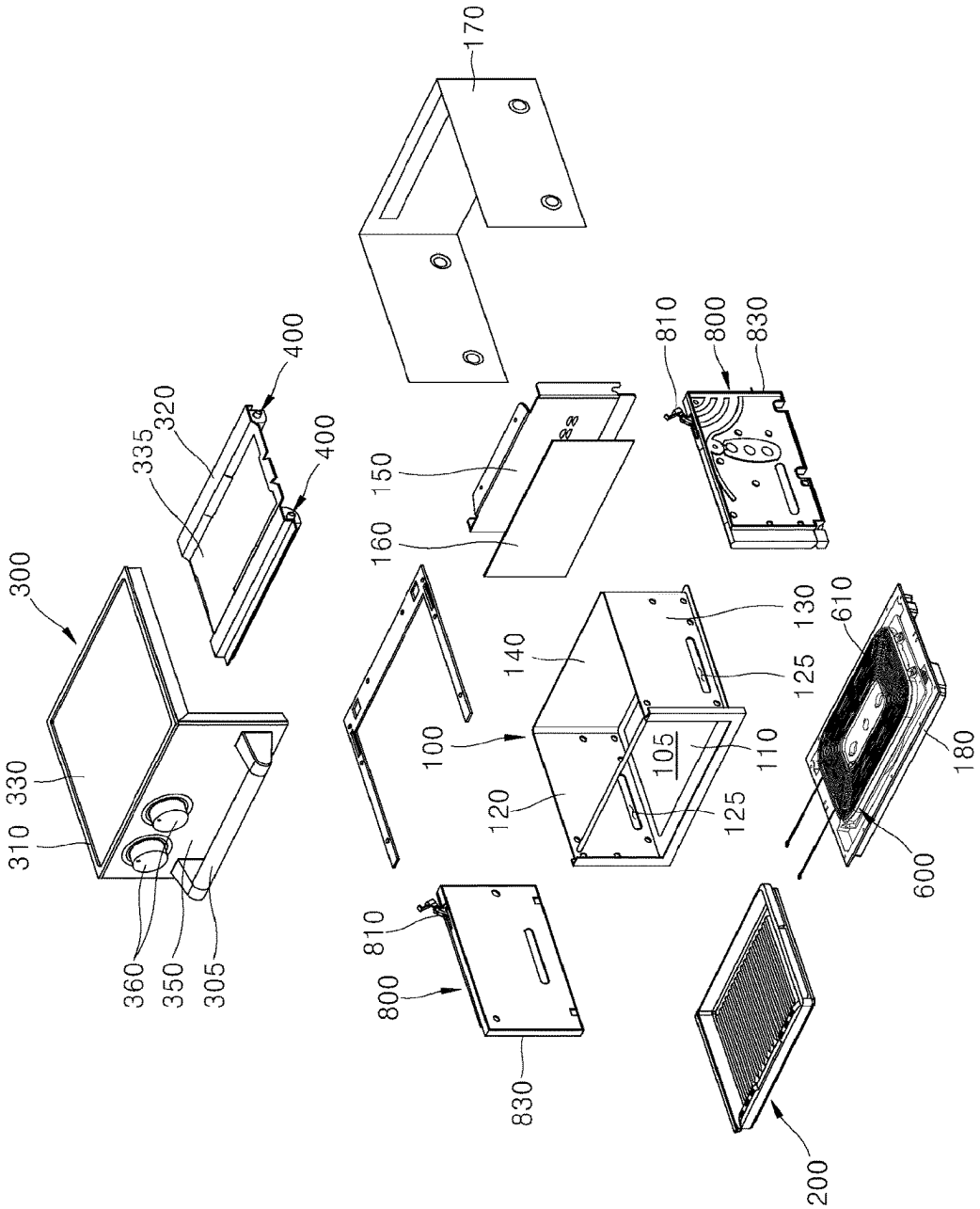
300
310
330
360
350
305
335
320
400
400
170
150
160
100
140
120
105
110
125
125
130
810
800
830
810
800
830
610
600
180
200

FIG. 4

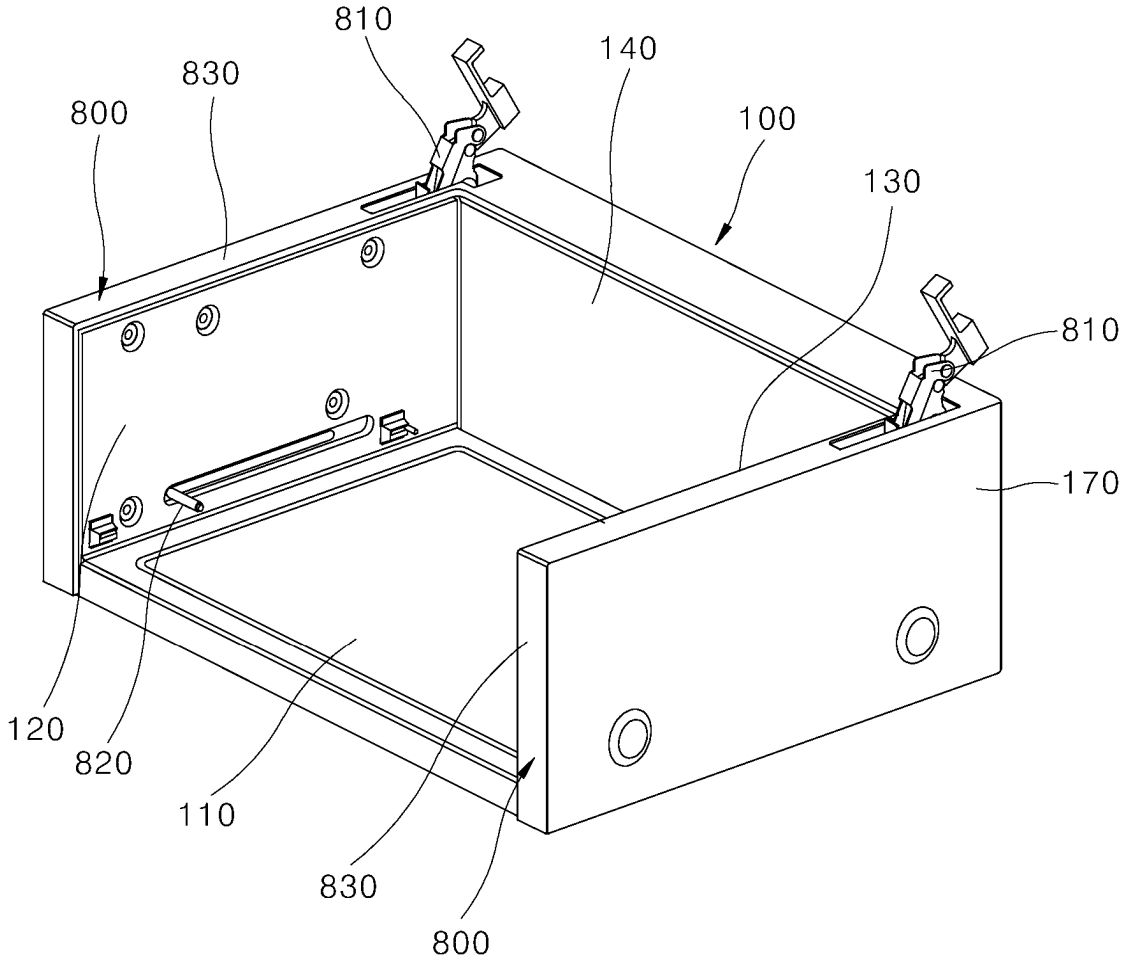

FIG. 5

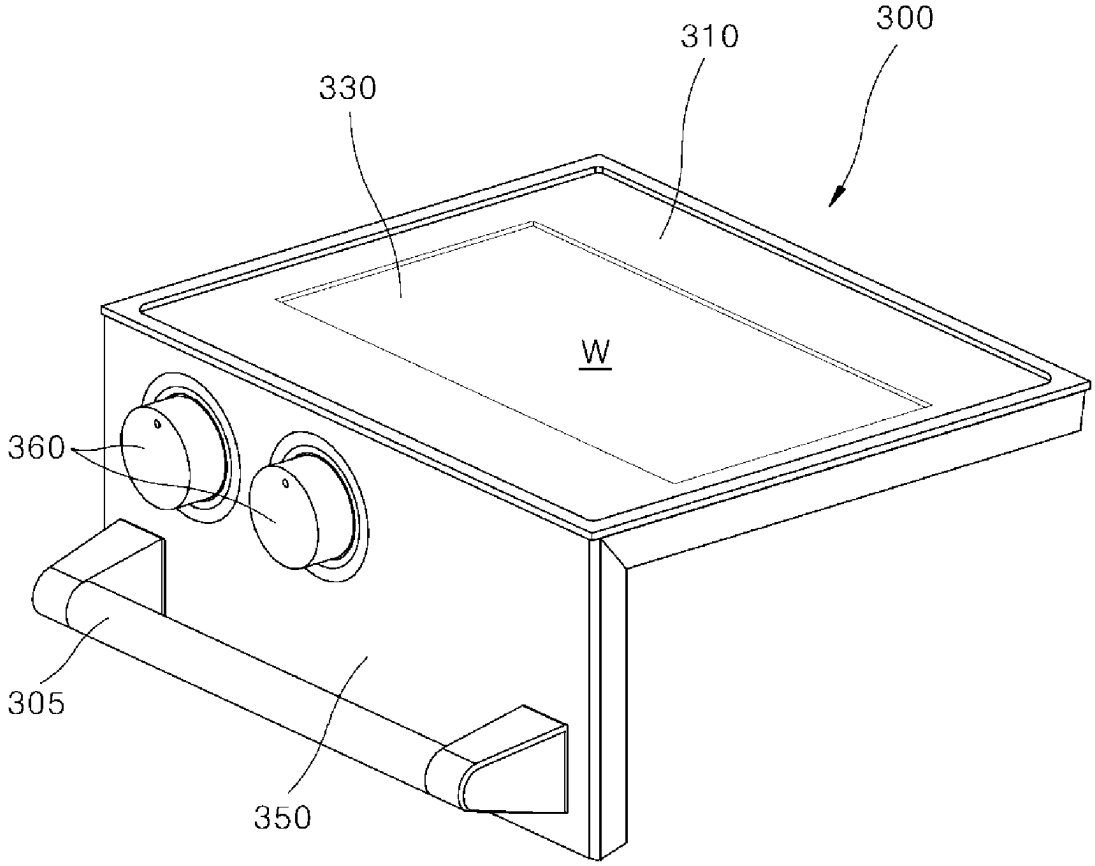

FIG. 6

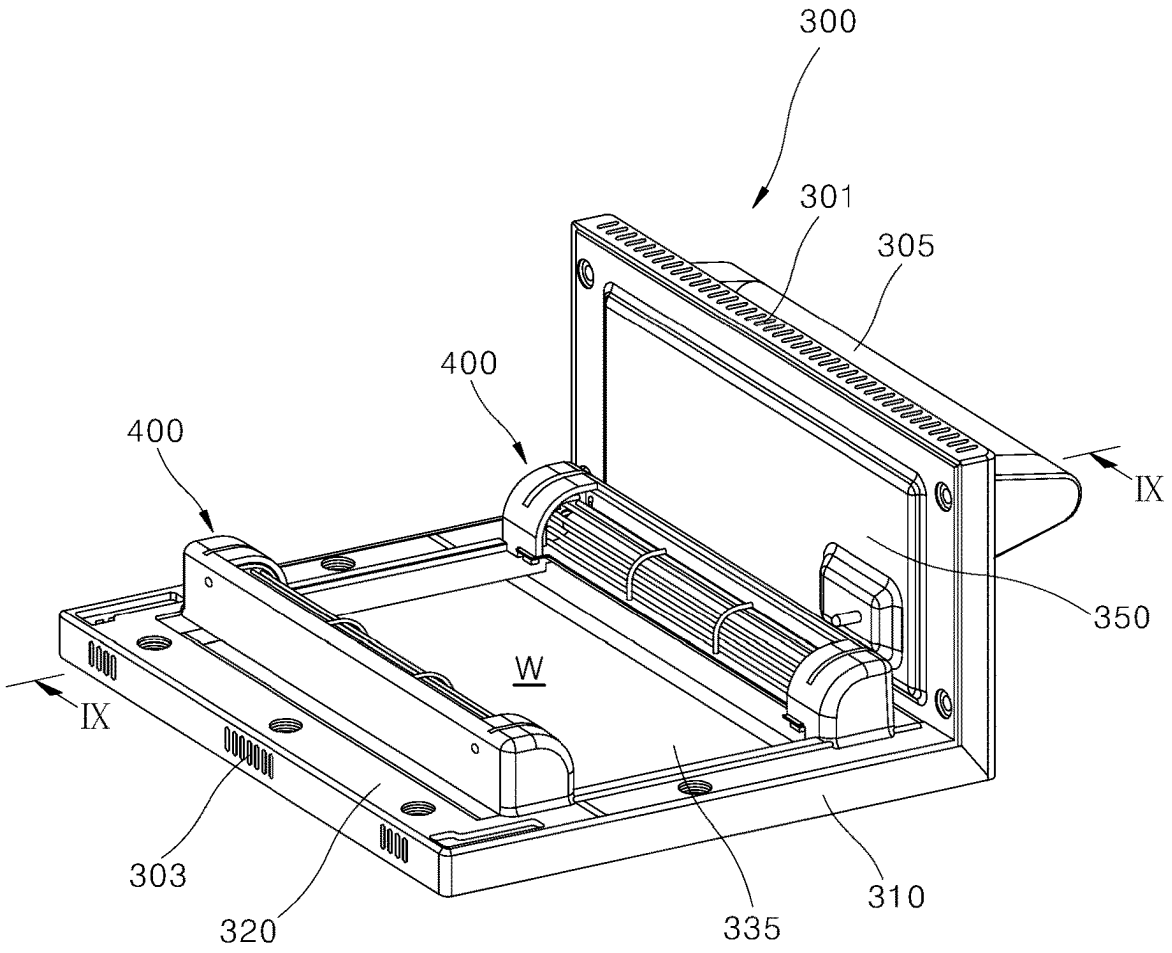

FIG. 7

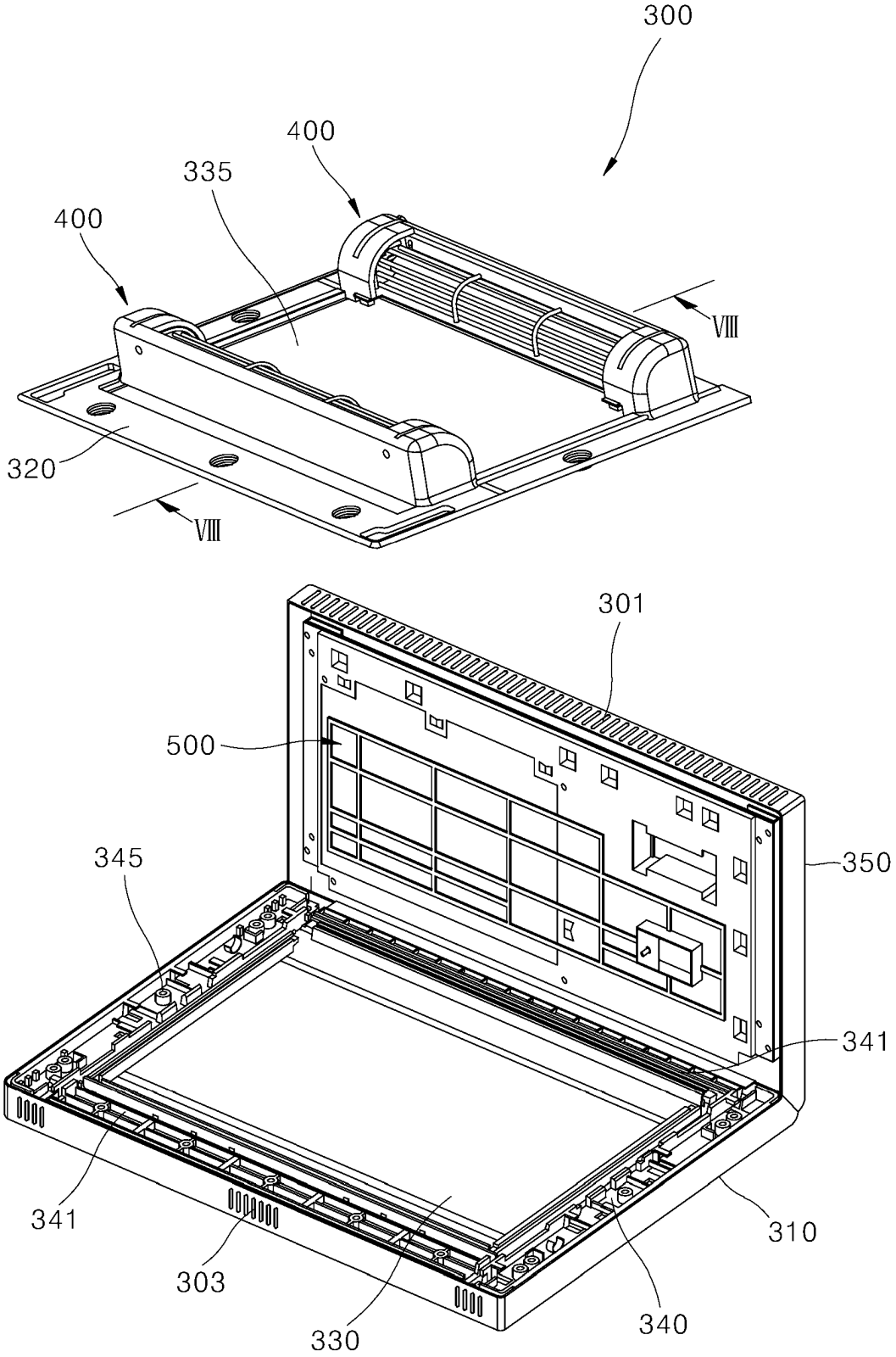
300
400
335
400
VIII
320
VIII
301
500
345
350
341
341
310
303
330
340

FIG. 8

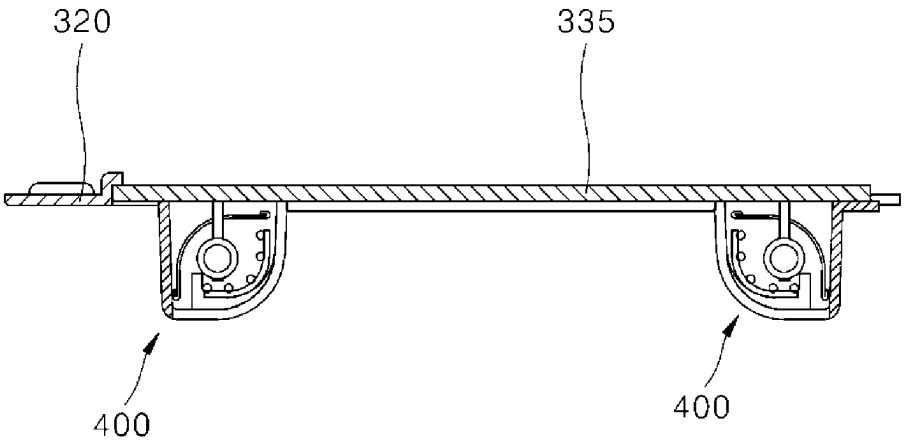

FIG. 9

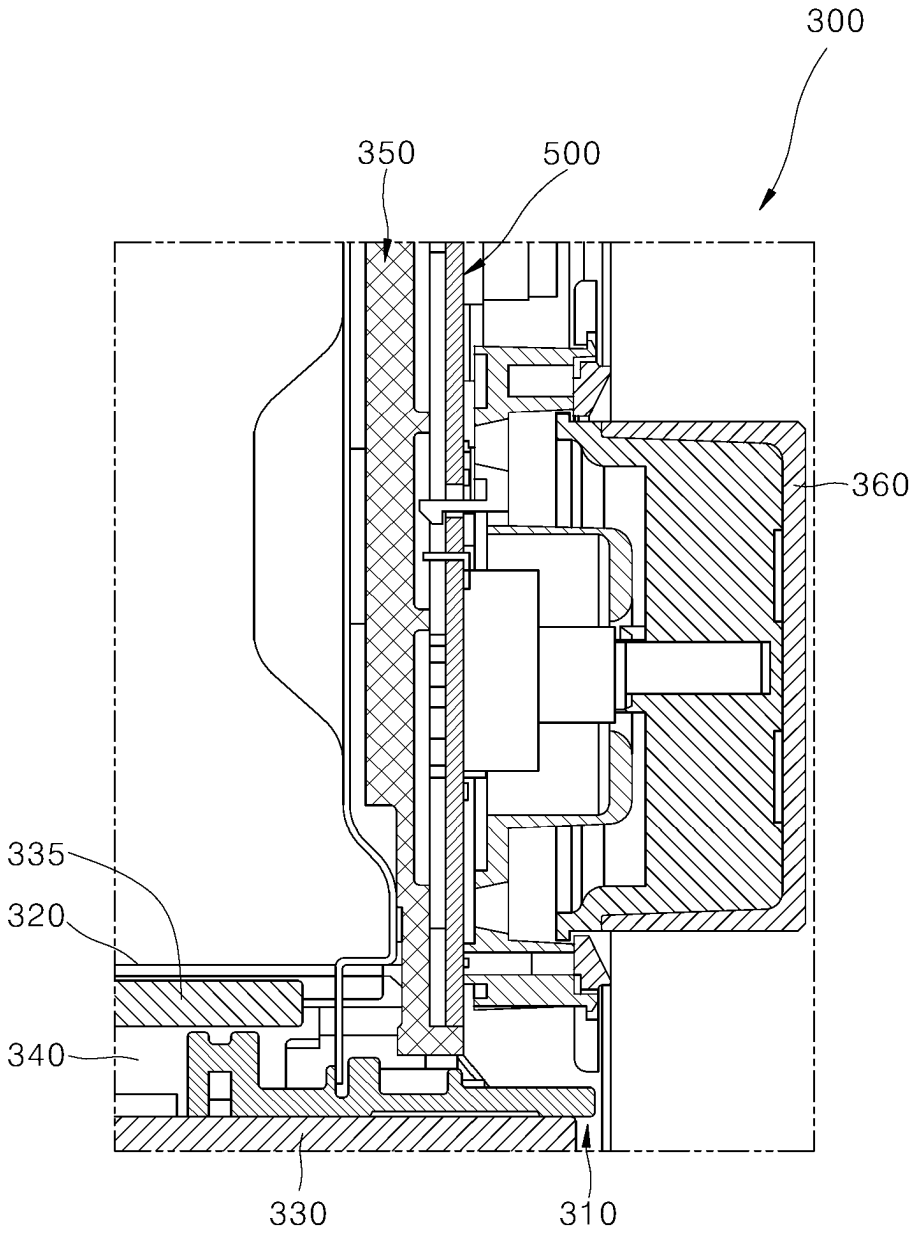

FIG. 10

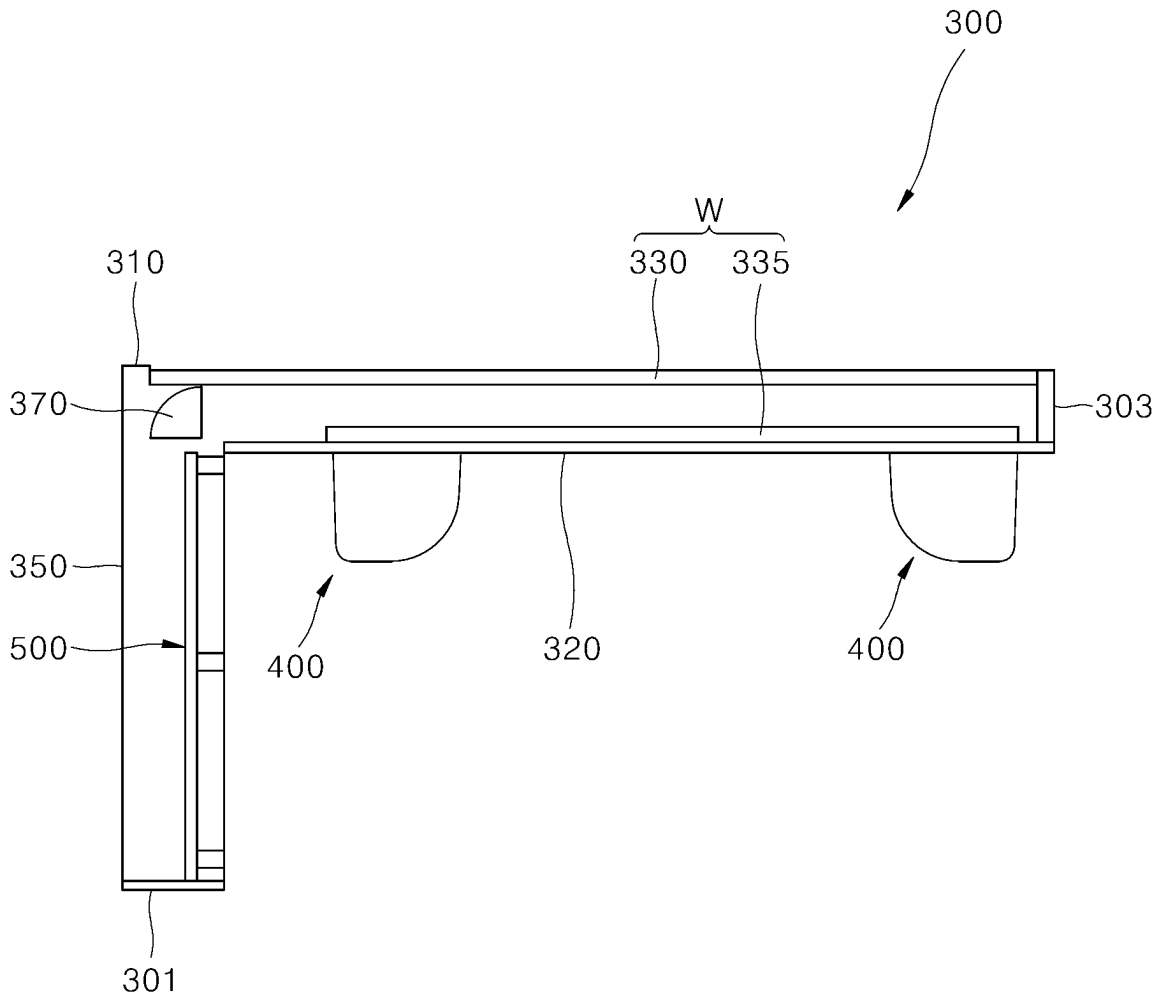

FIG. 11

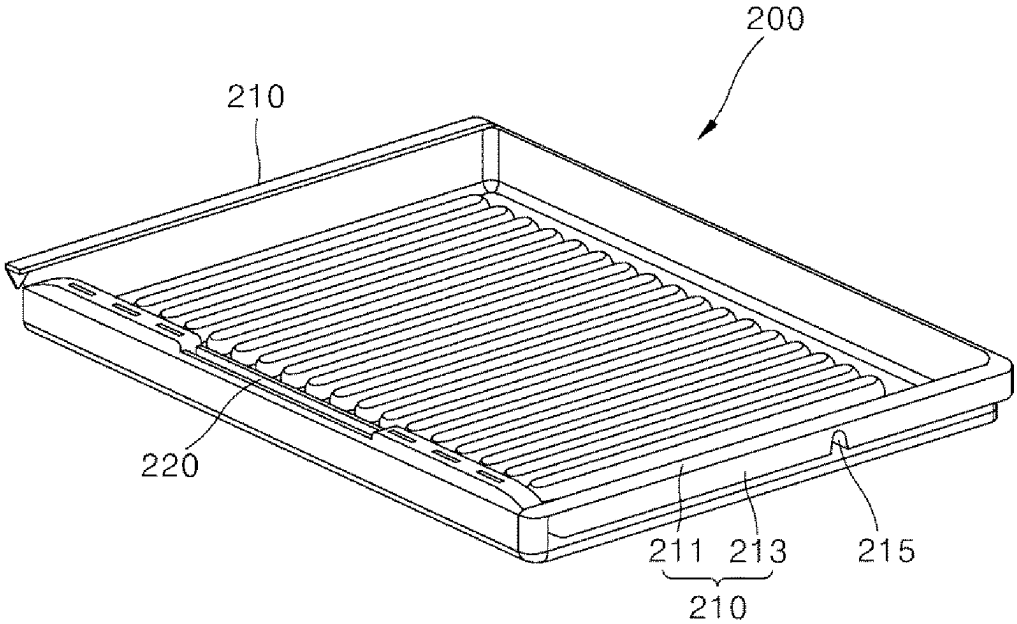

FIG. 12

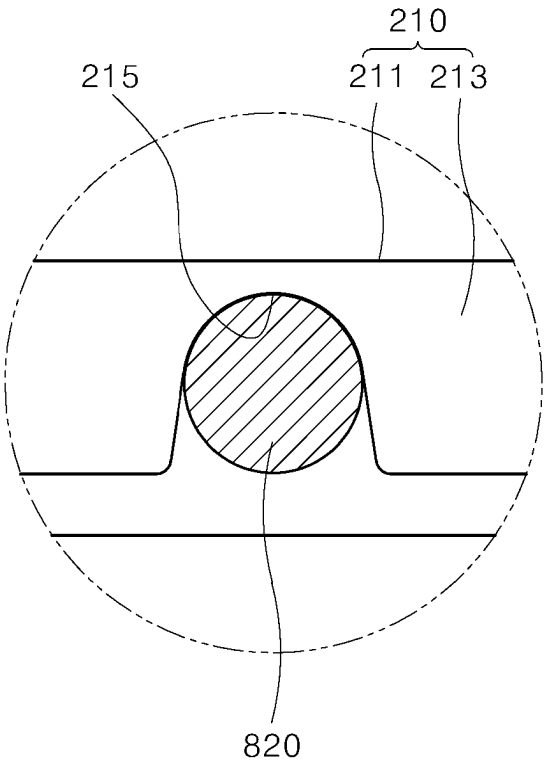

FIG. 13

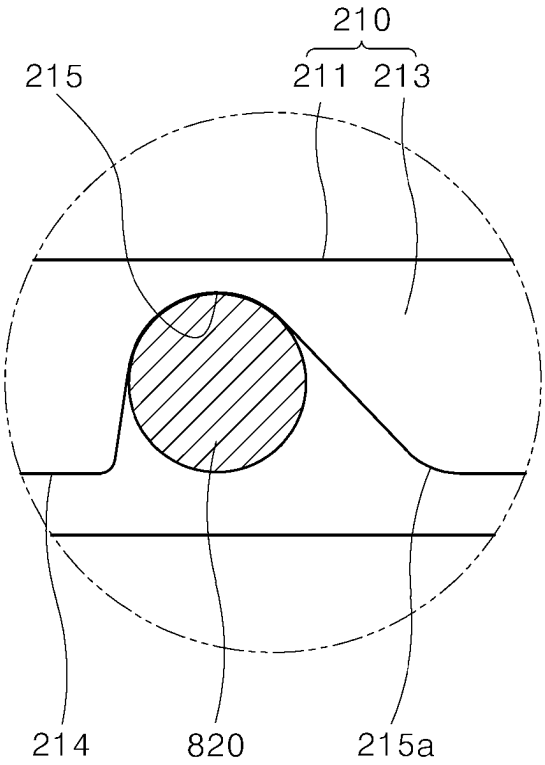

FIG. 14

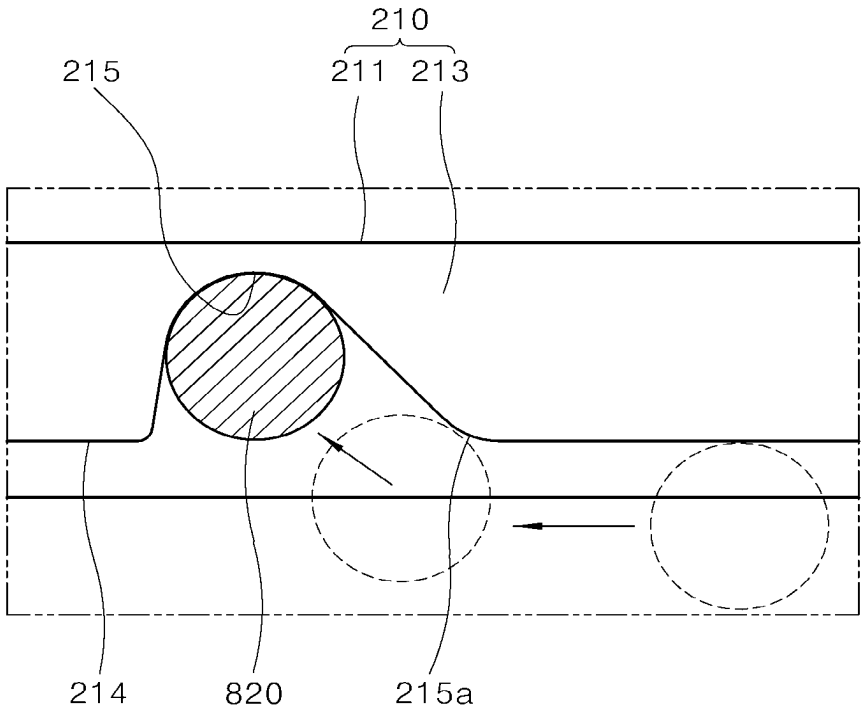

FIG. 15

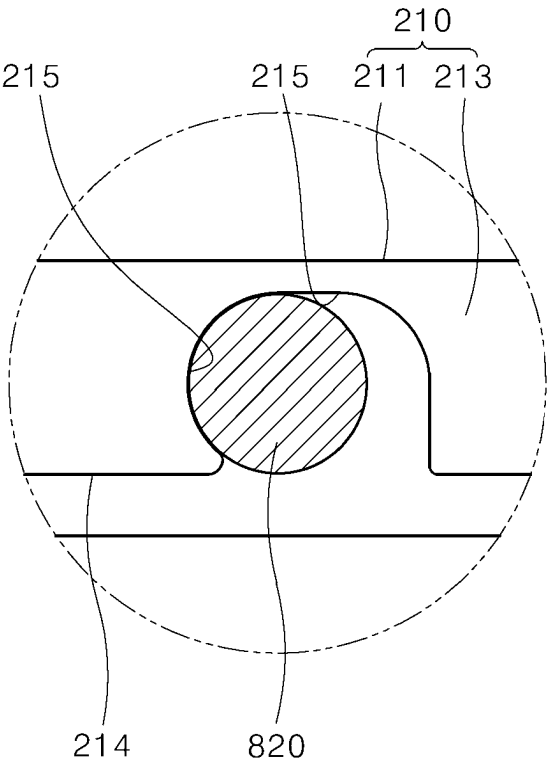

FIG. 16

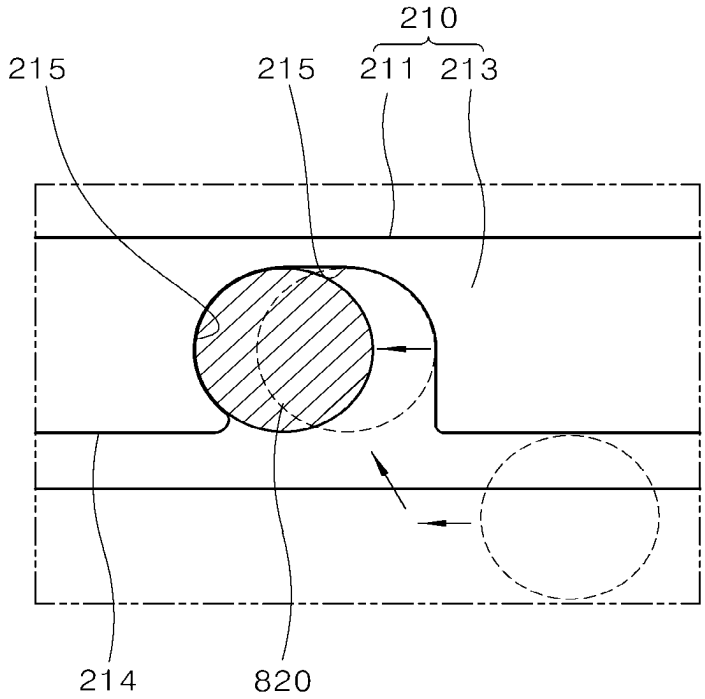

FIG. 17

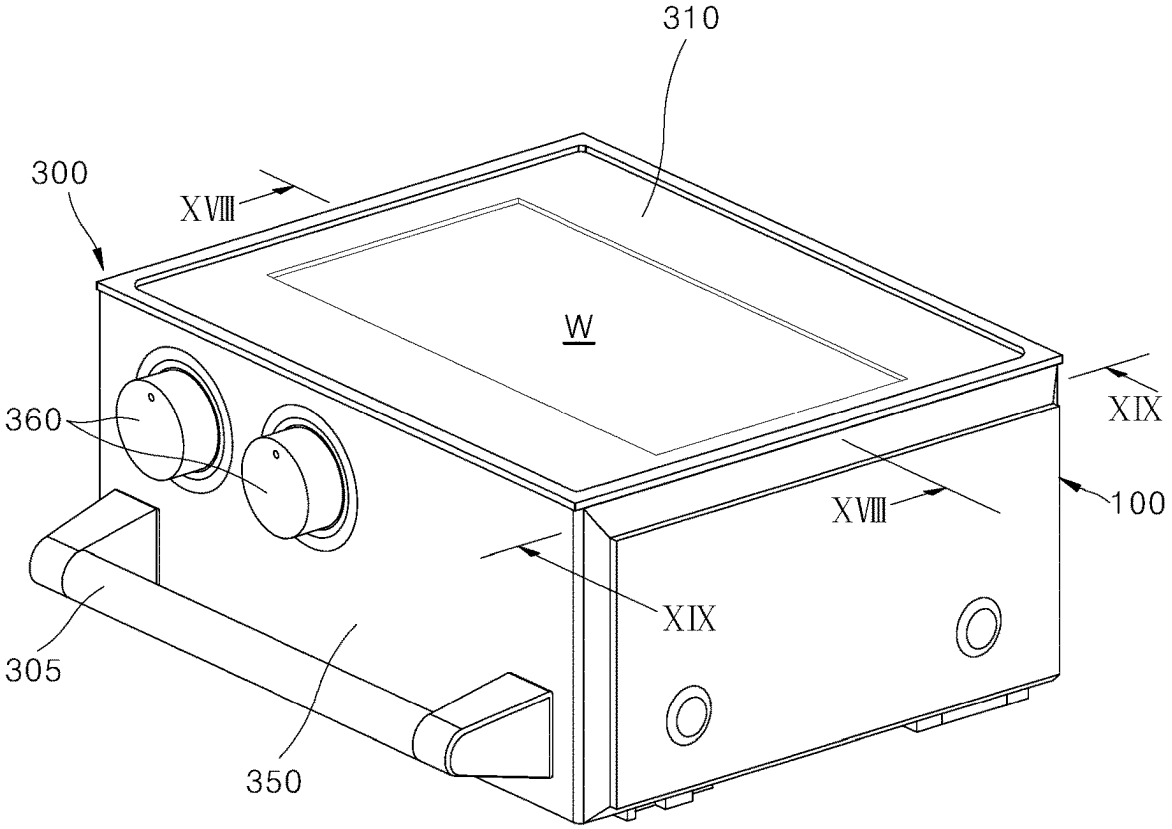

FIG. 18

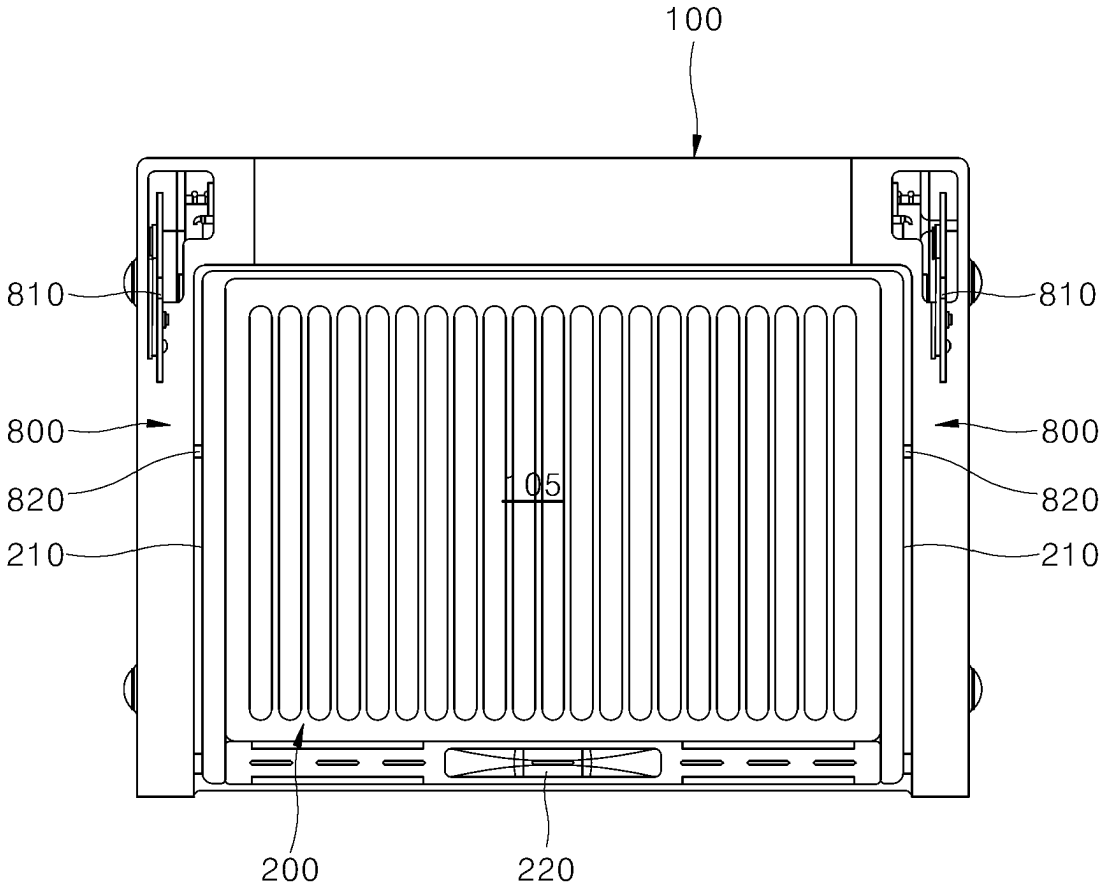

FIG. 19

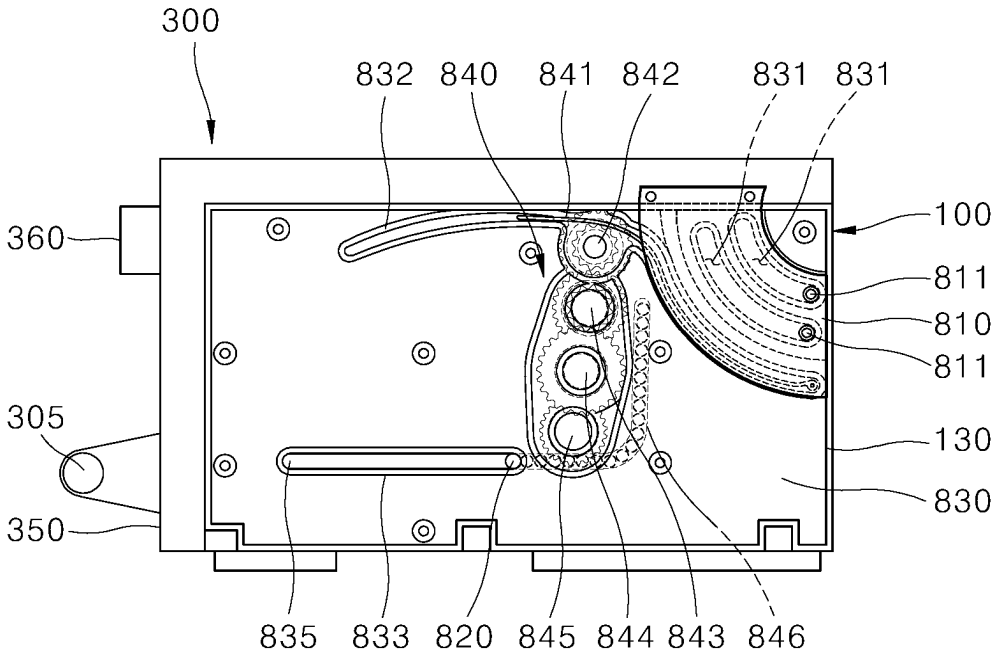
300
832
840
841
842
831
831
360
100
811
810
811
305
130
830
350
835
833
820
845
844
843
846

FIG. 20

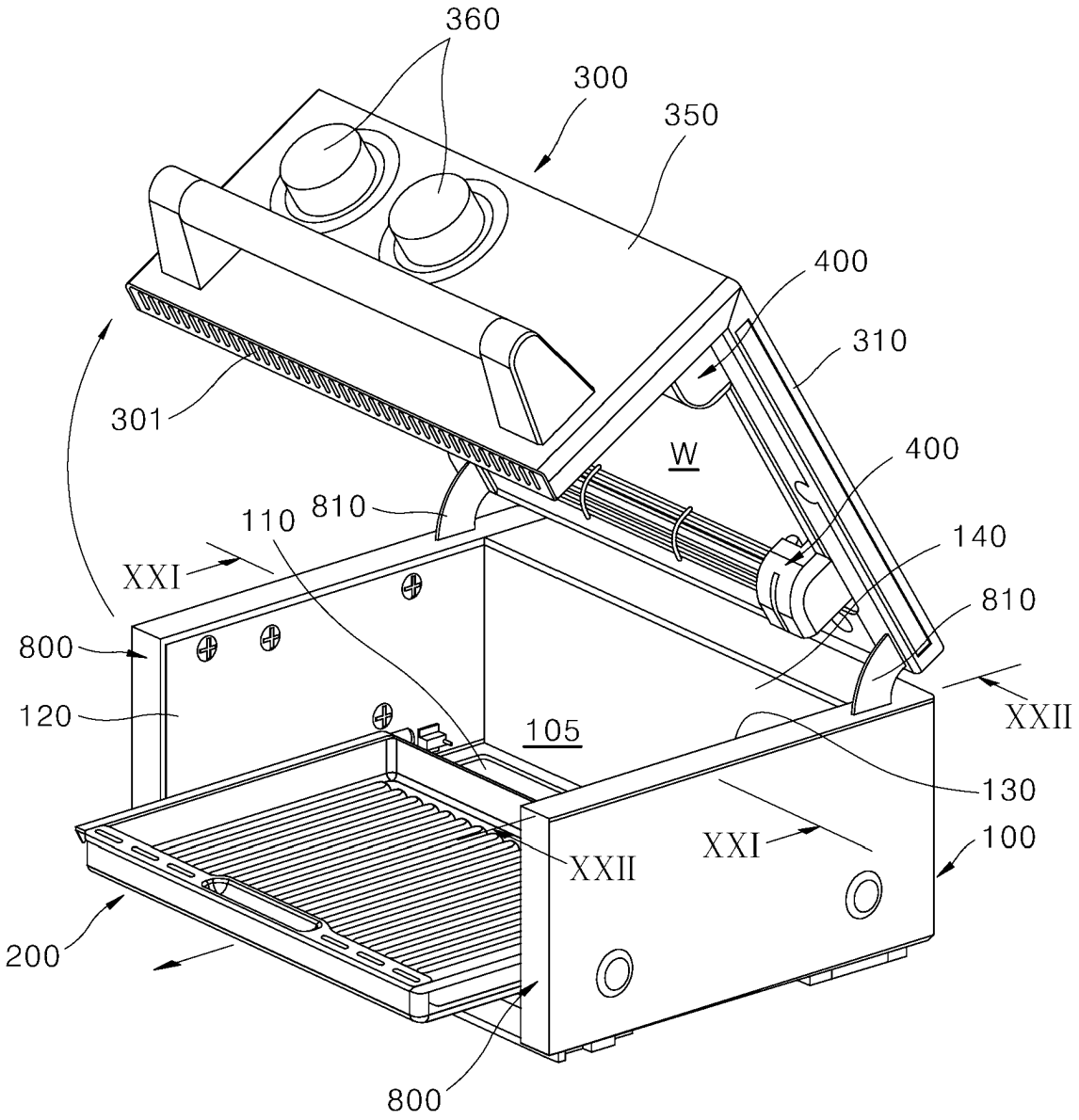
360
300
350
400
310
301
W
400
810
110
140
XXI
810
800
XXII
120
105
130
XXI
100
XXII
200
800

FIG. 21

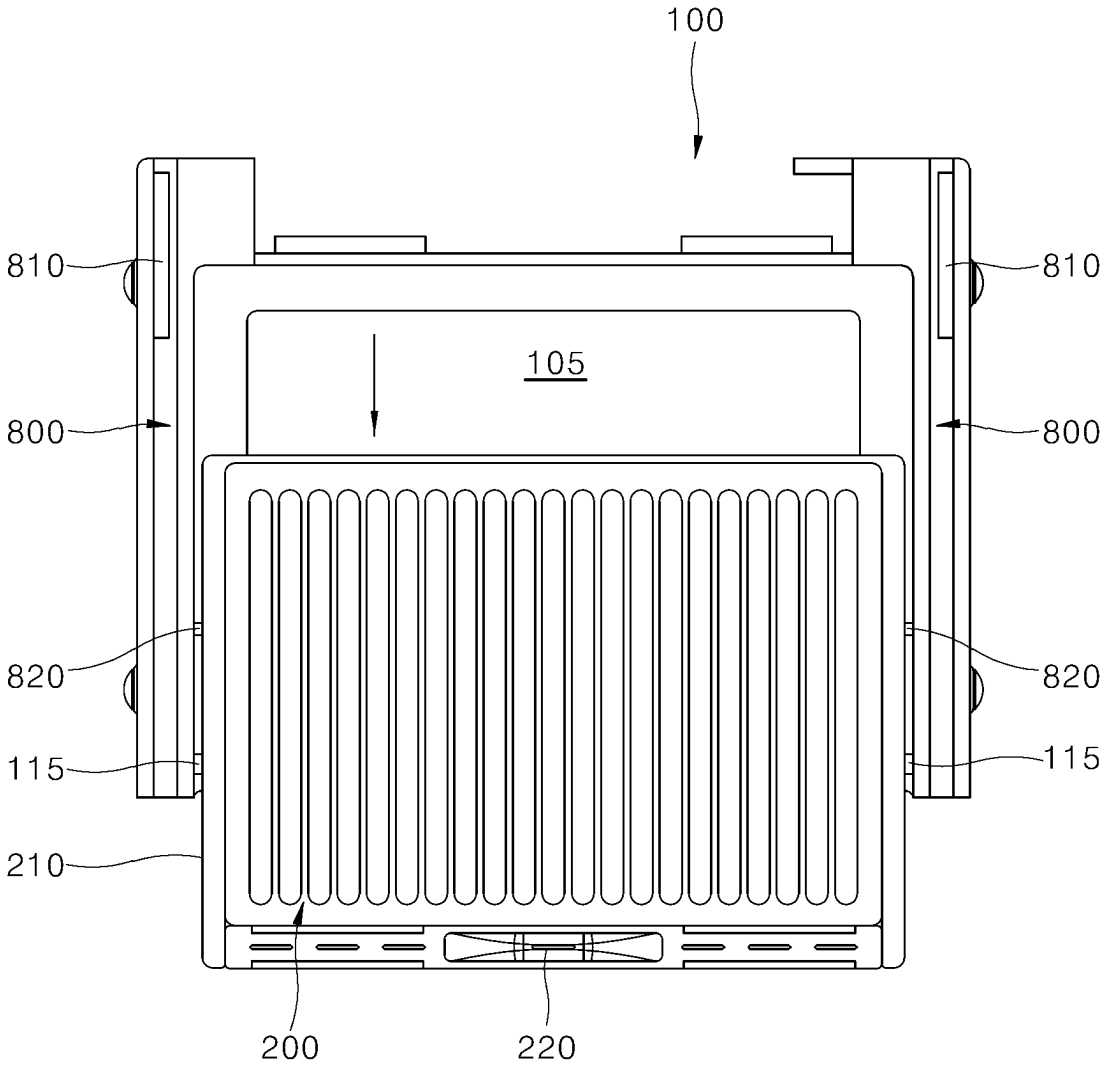

FIG. 22

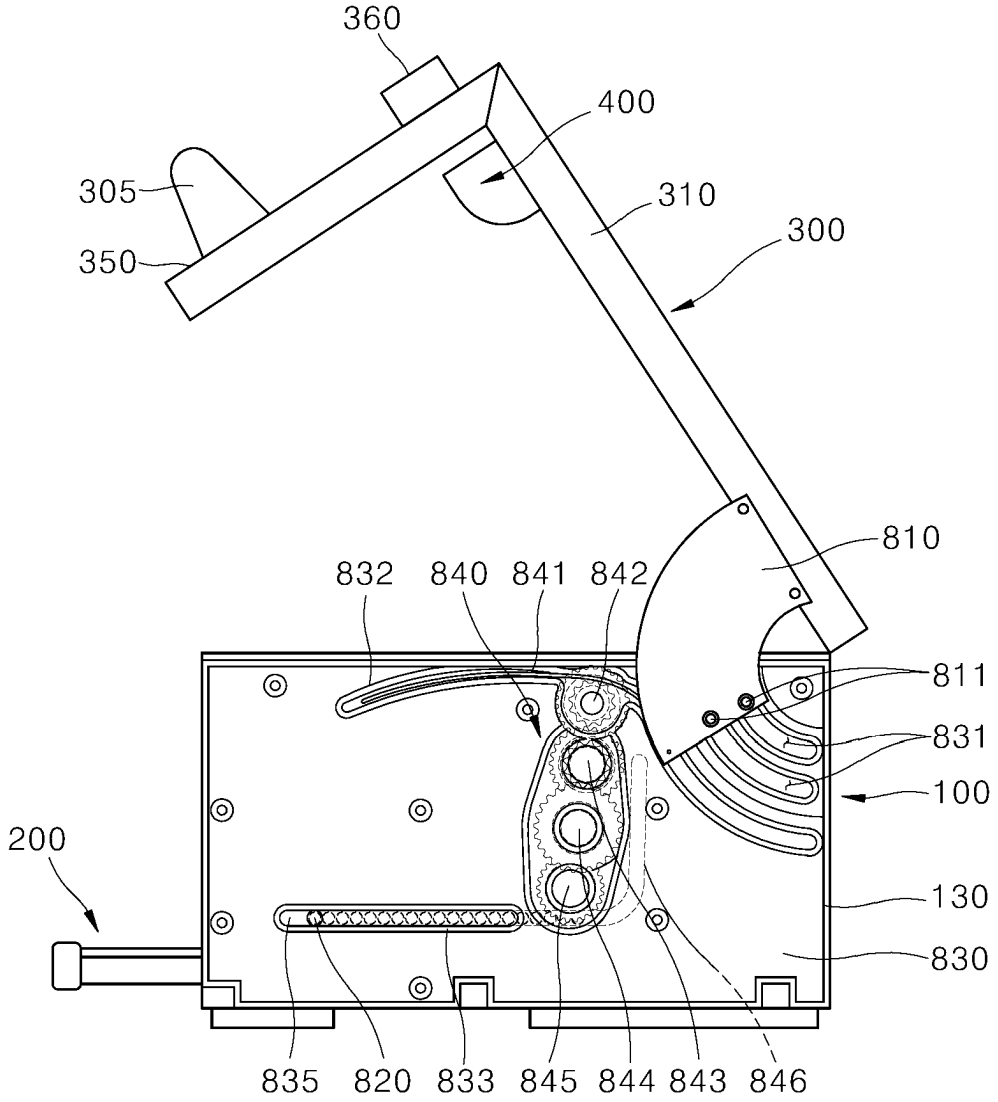
360
400
305
310
350
300
810
832
840
841
842
811
831
100
200
130
830
835
820
833
845
844
843
846

FIG. 23

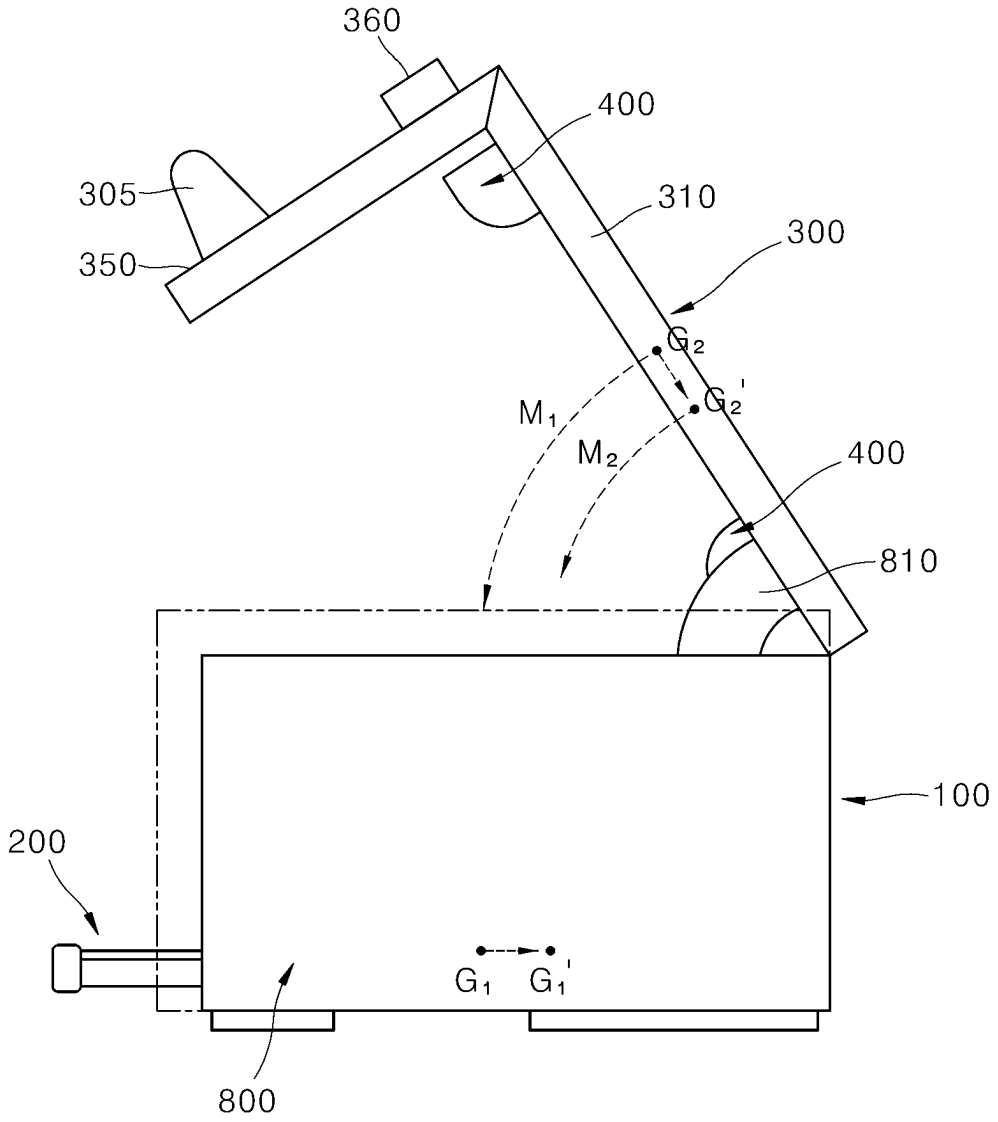

FIG. 24

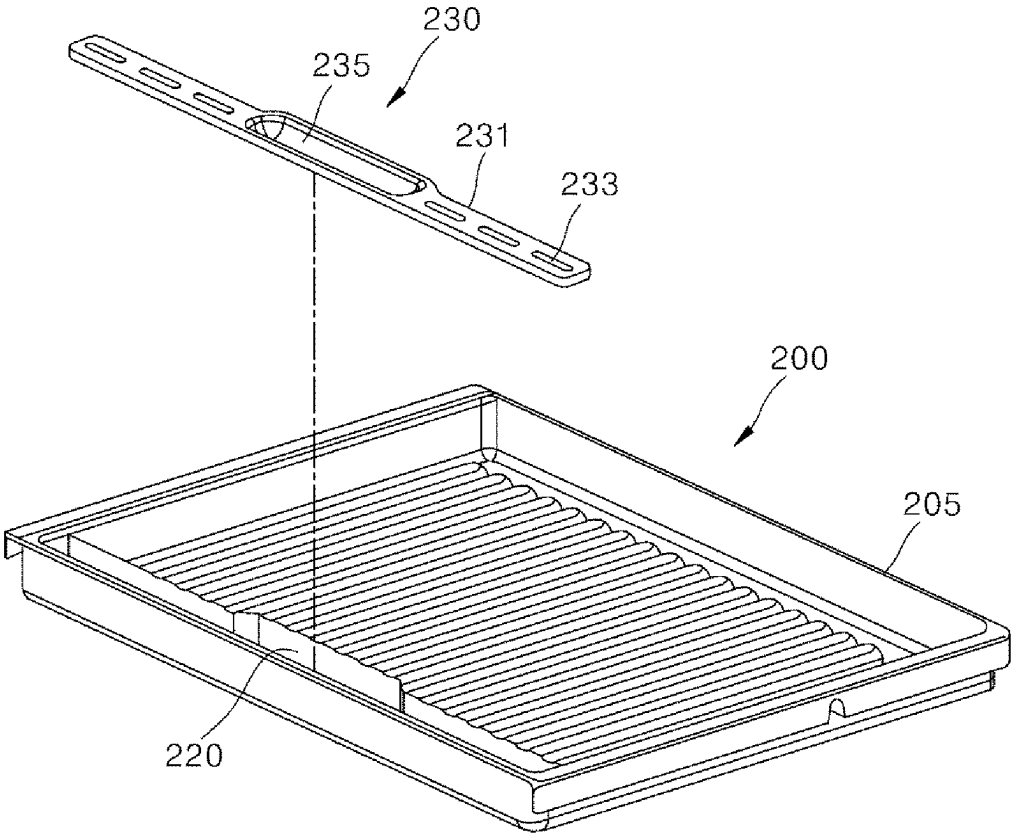
230
235
231
233
200
205
220

FIG. 25

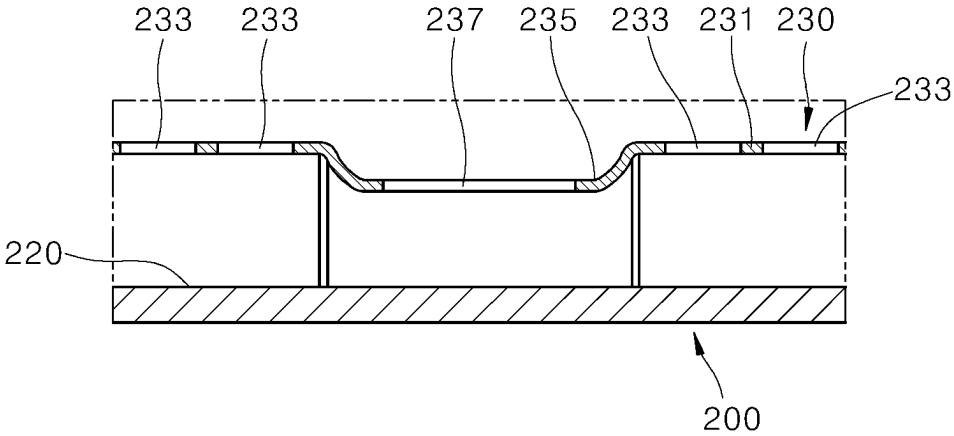
233
233
237
235
233
231
230
233
220
200

FIG. 26

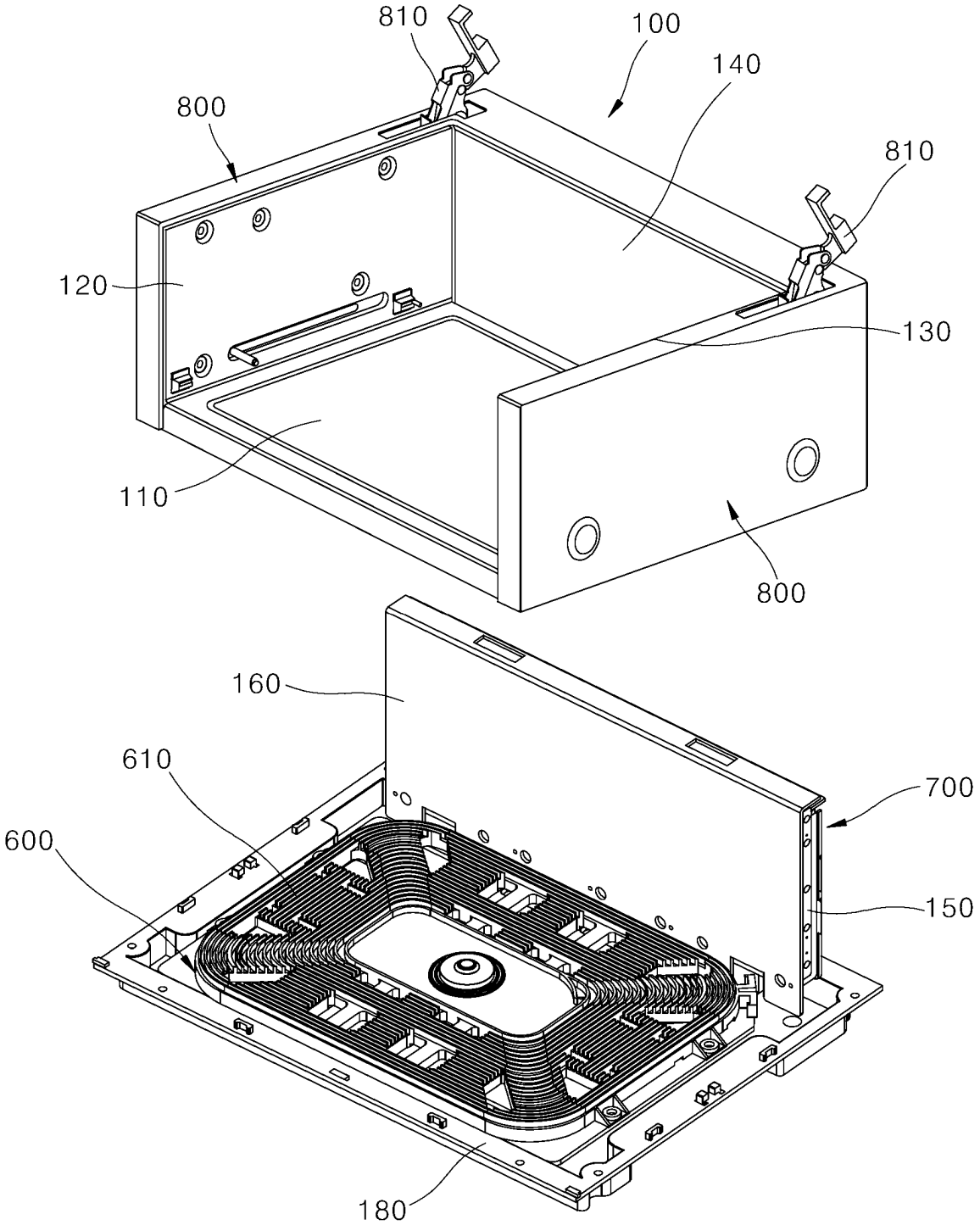

FIG. 27

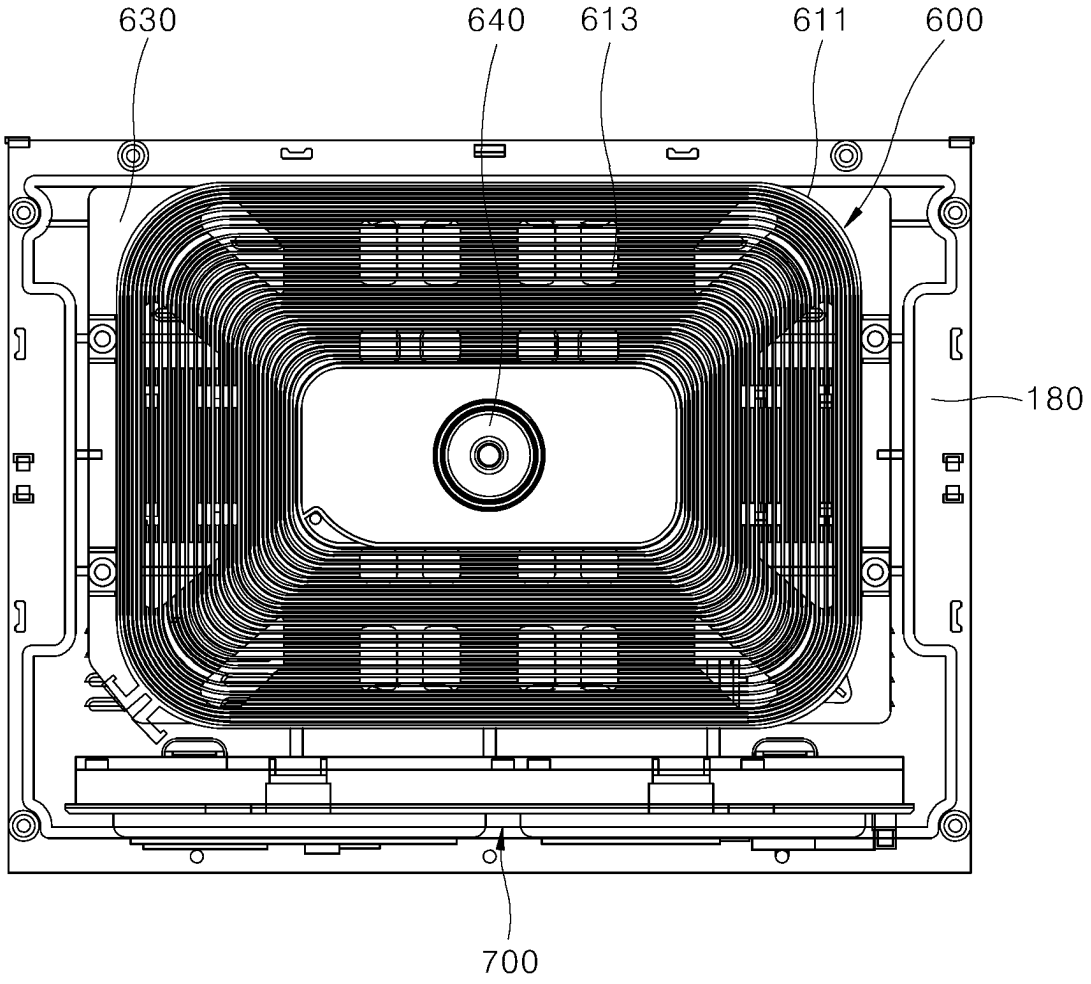

FIG. 28

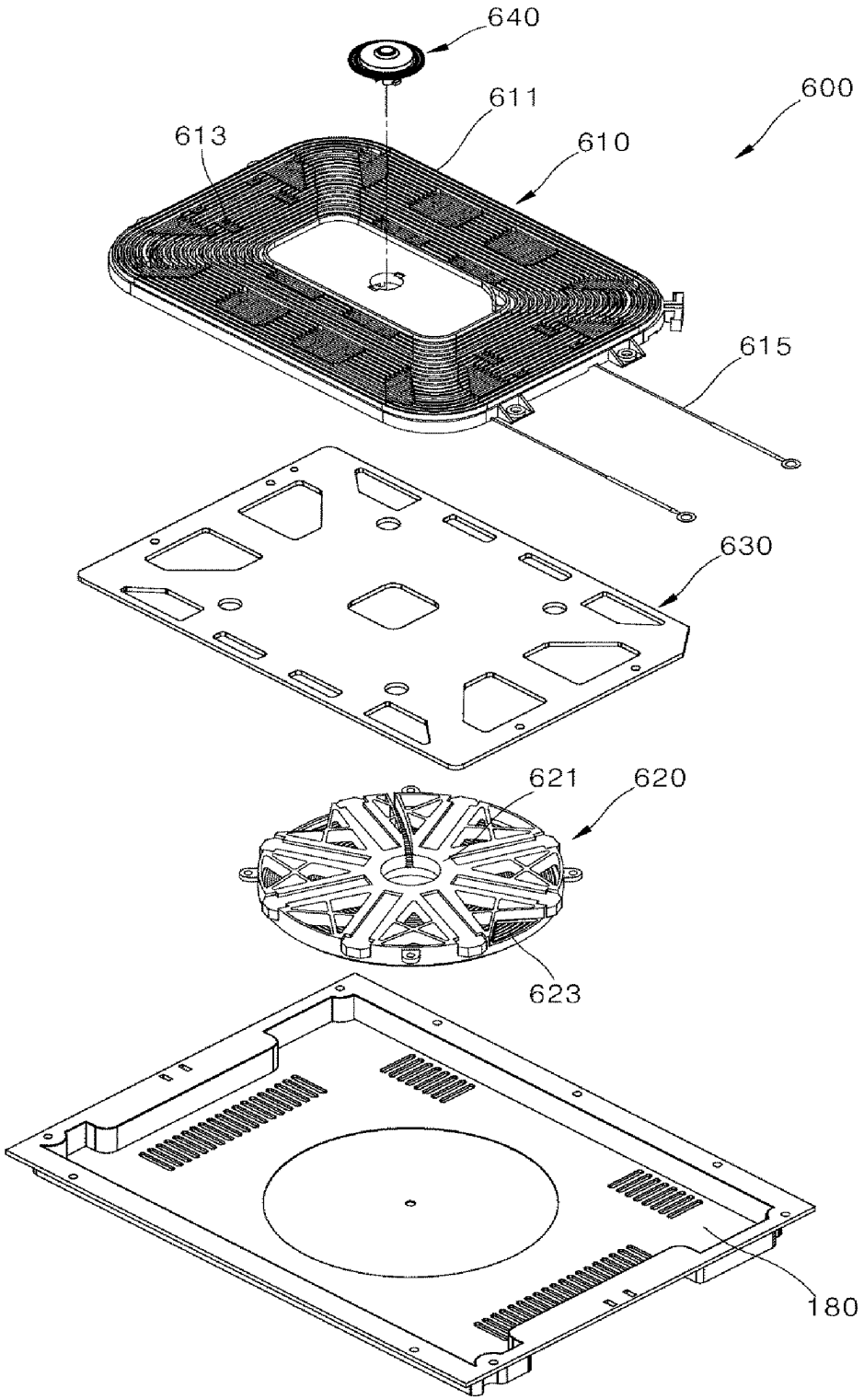

FIG. 29

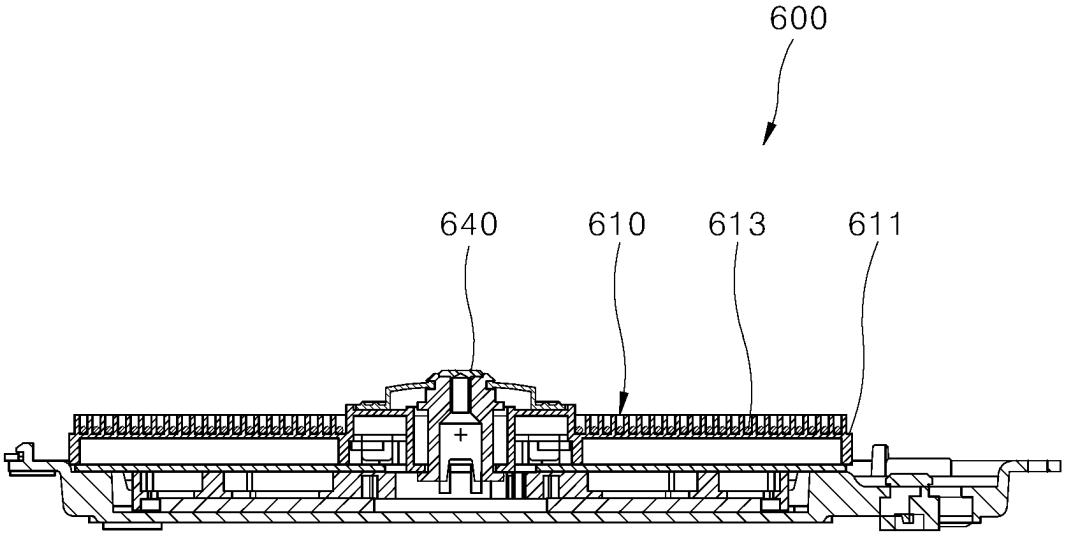

FIG. 30

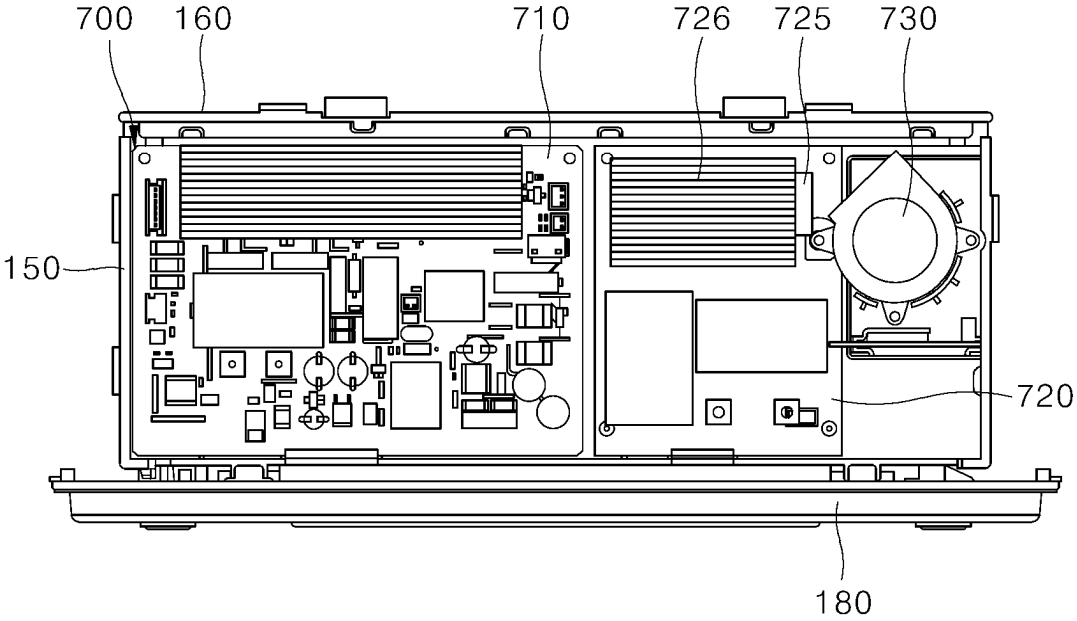

FIG. 31

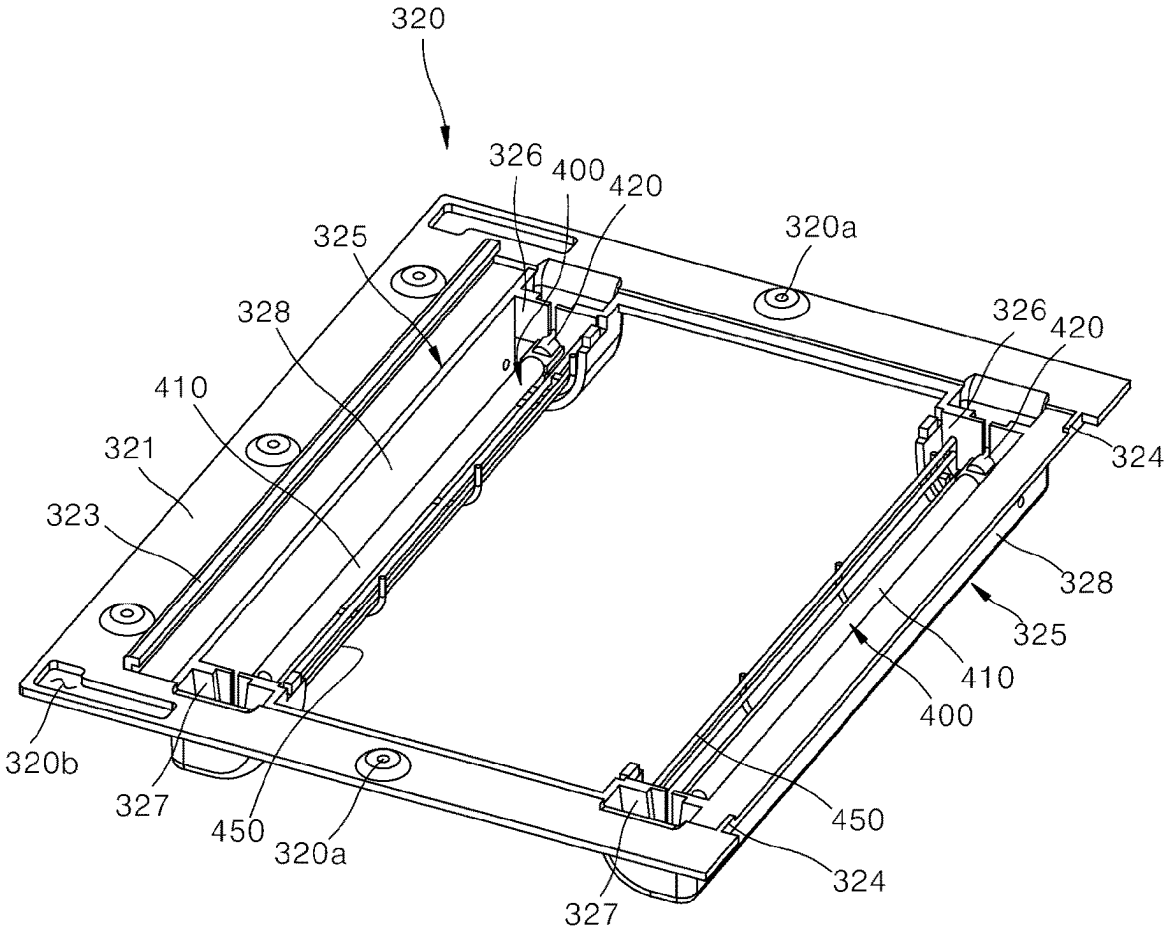
320
326
400
420
325
320a
328
326
420
410
321
324
323
328
325
410
400
320b
327
450
320a
450
324
327

FIG. 32

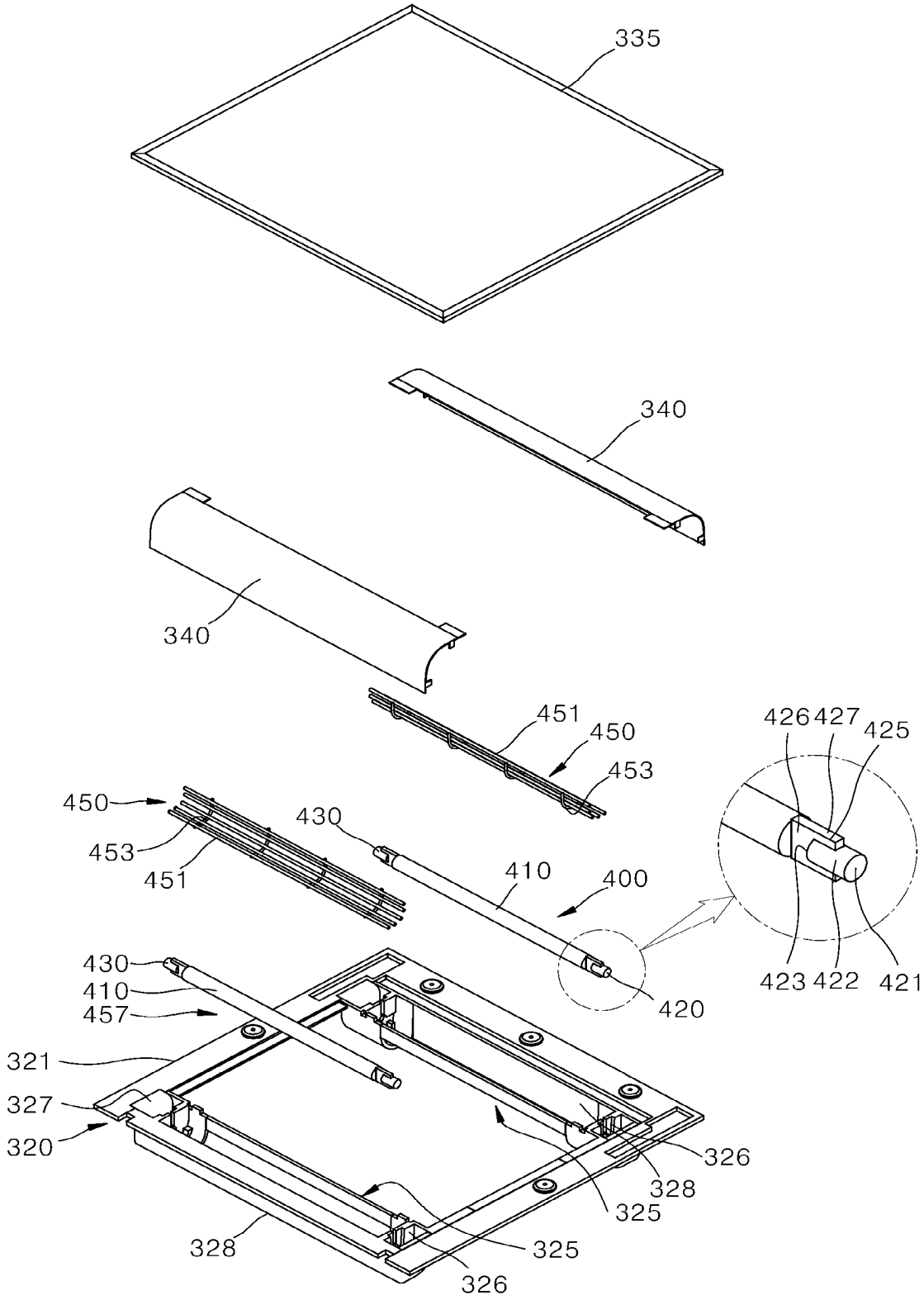
335
340
340
451
450
453
450
453
451
430
410
400
426
427
425
423
422
421
420
430
410
457
321
327
320
326
328
325
325
328
326

FIG. 33

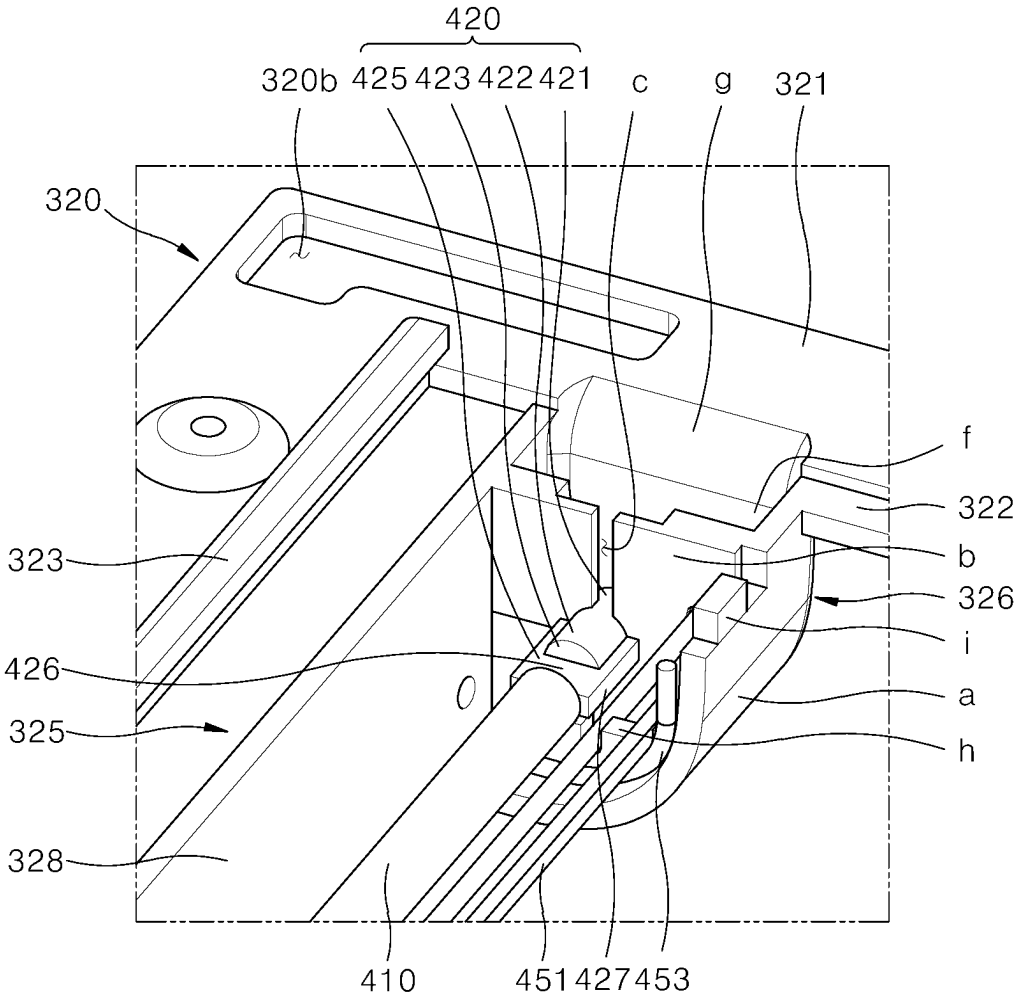
420
320b
425
423
422
421
c
g
321
320
f
322
323
b
326
i
426
a
325
h
328
410
451
427
453

FIG. 34

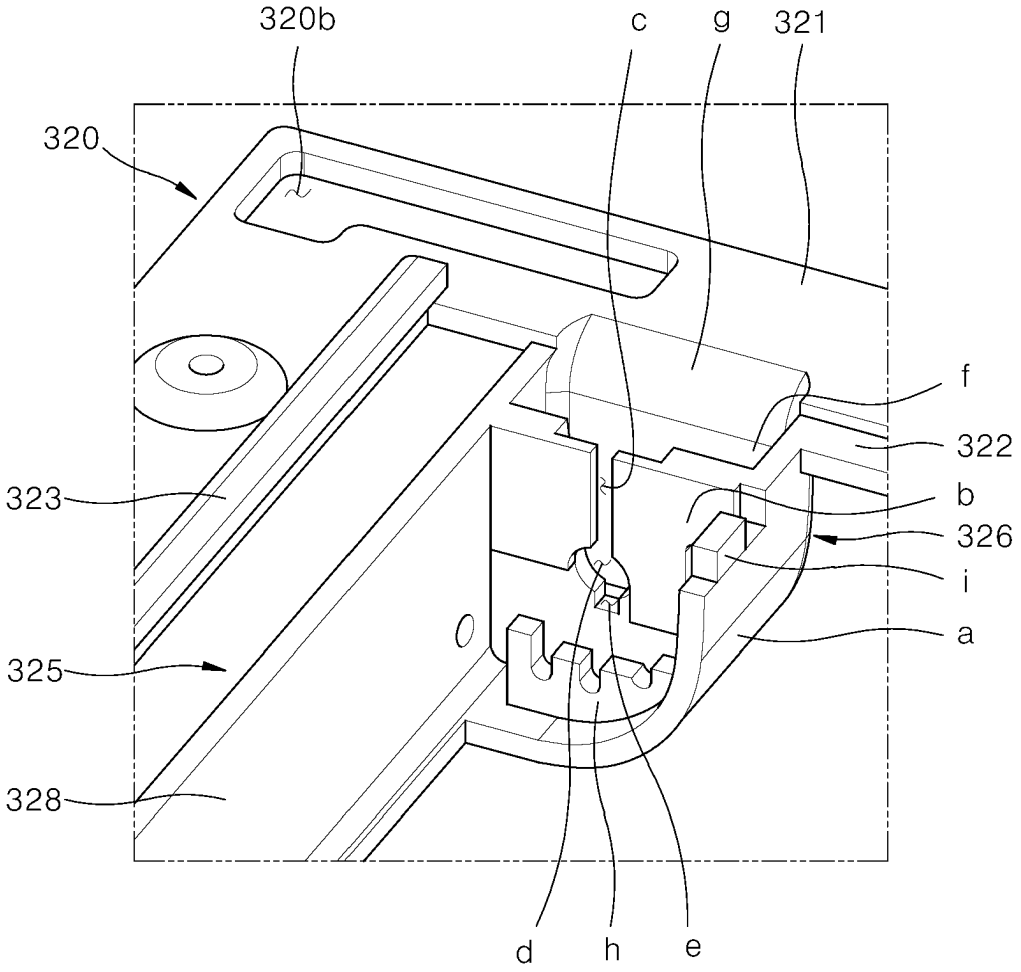

FIG. 35

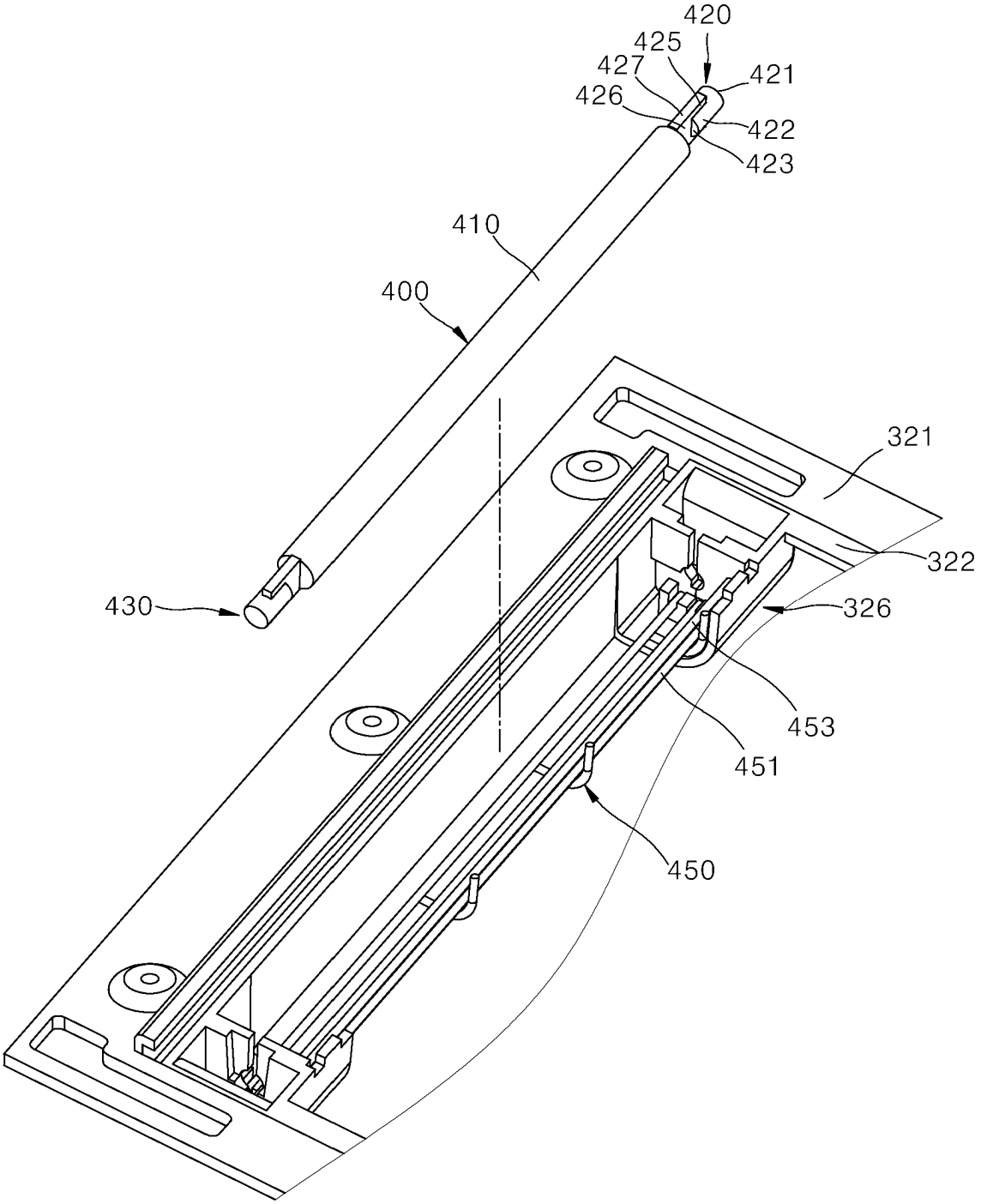

FIG. 36

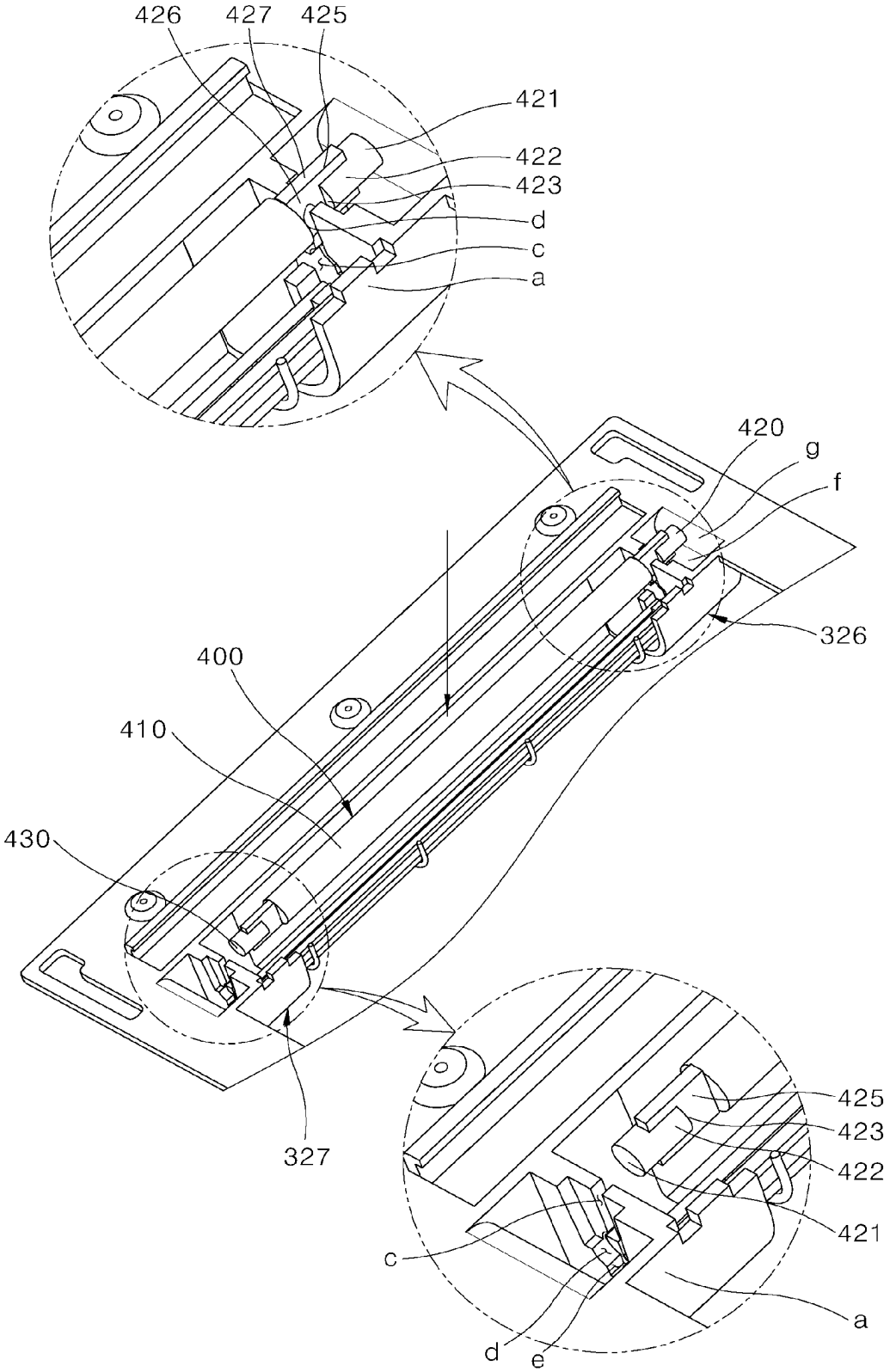
426
427
425
421
422
423
d
c
a
420
g
f
326
400
410
430
327
425
423
422
421
c
a
d
e

FIG. 37

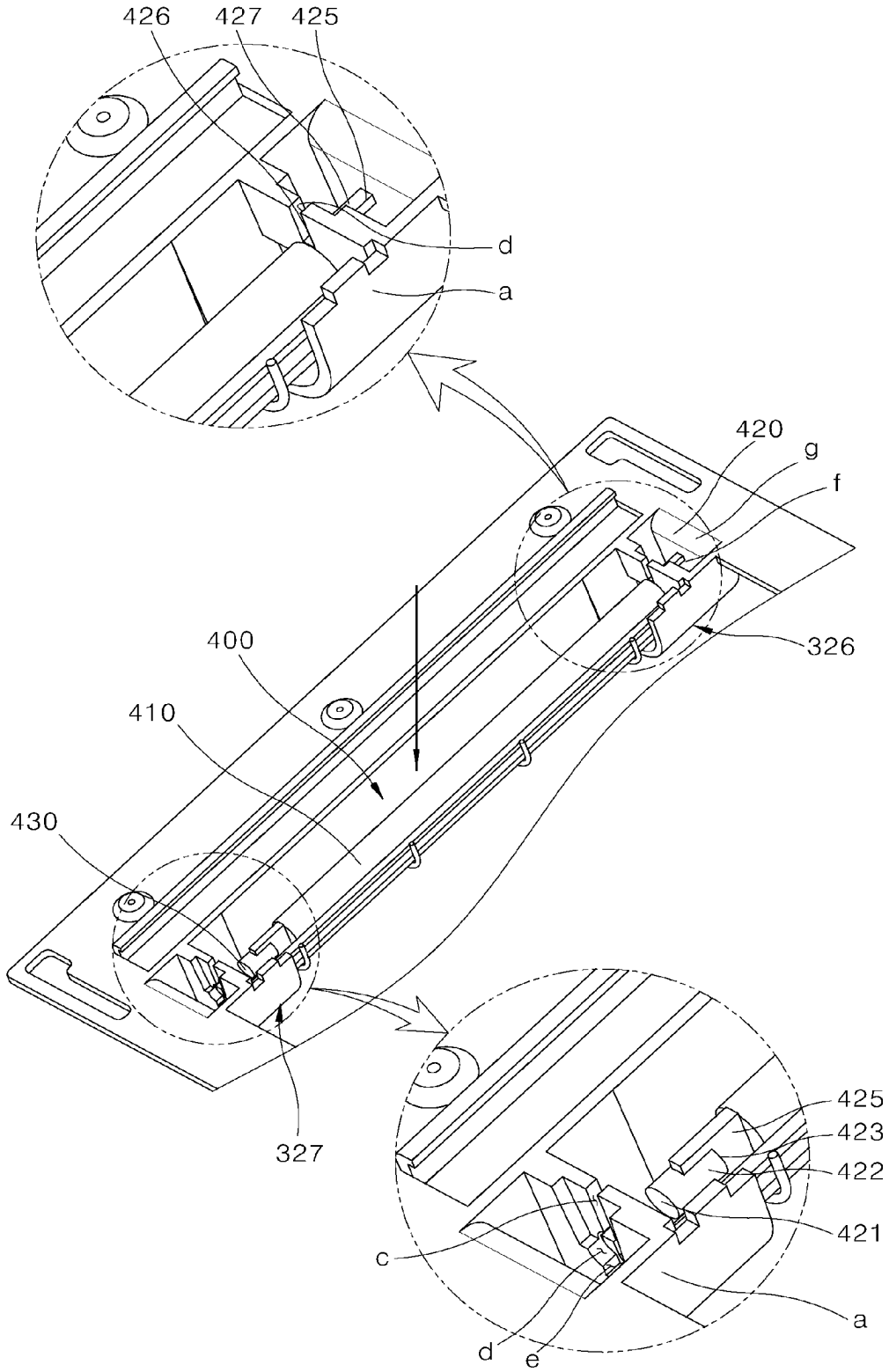

FIG. 38

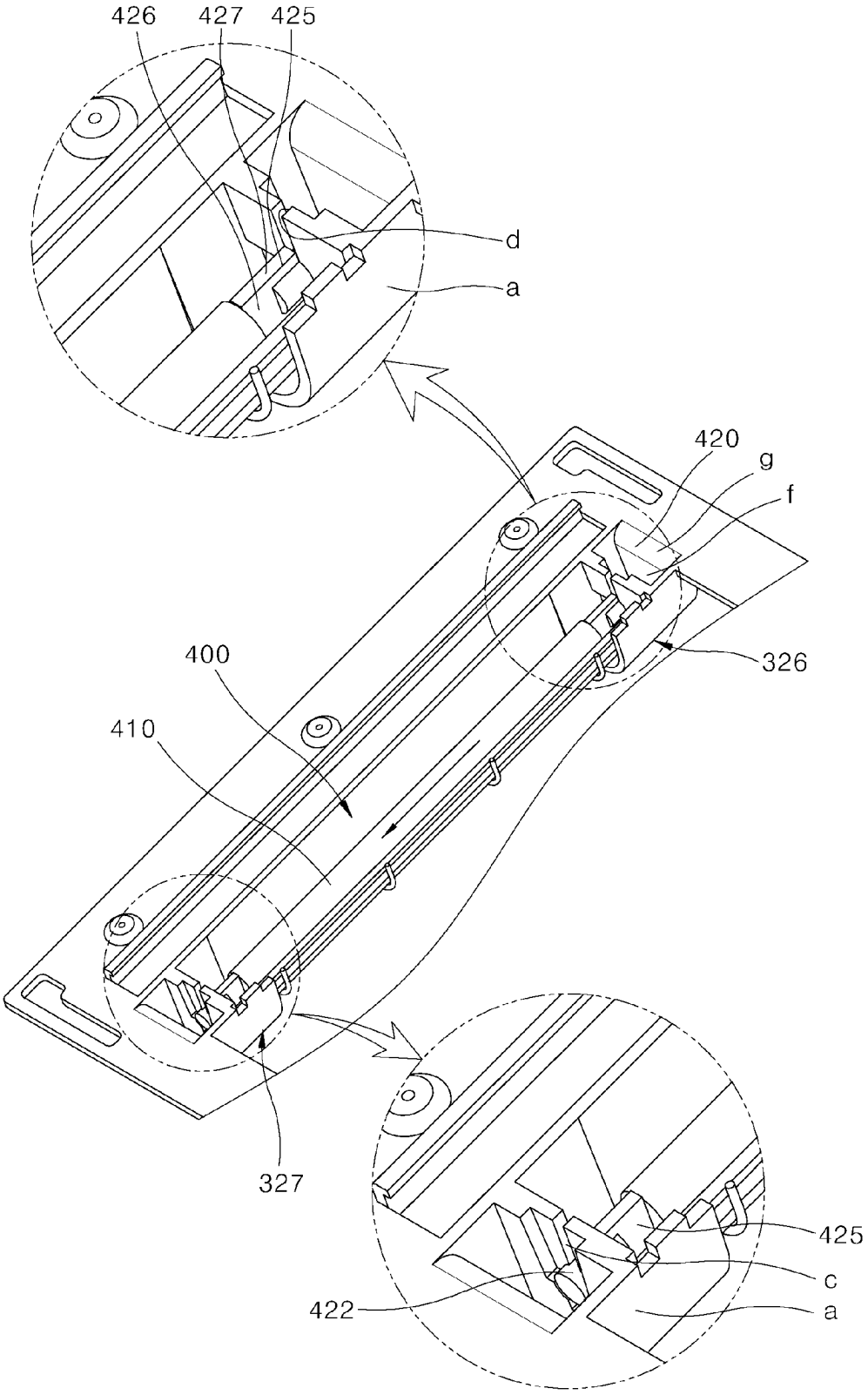

FIG. 39

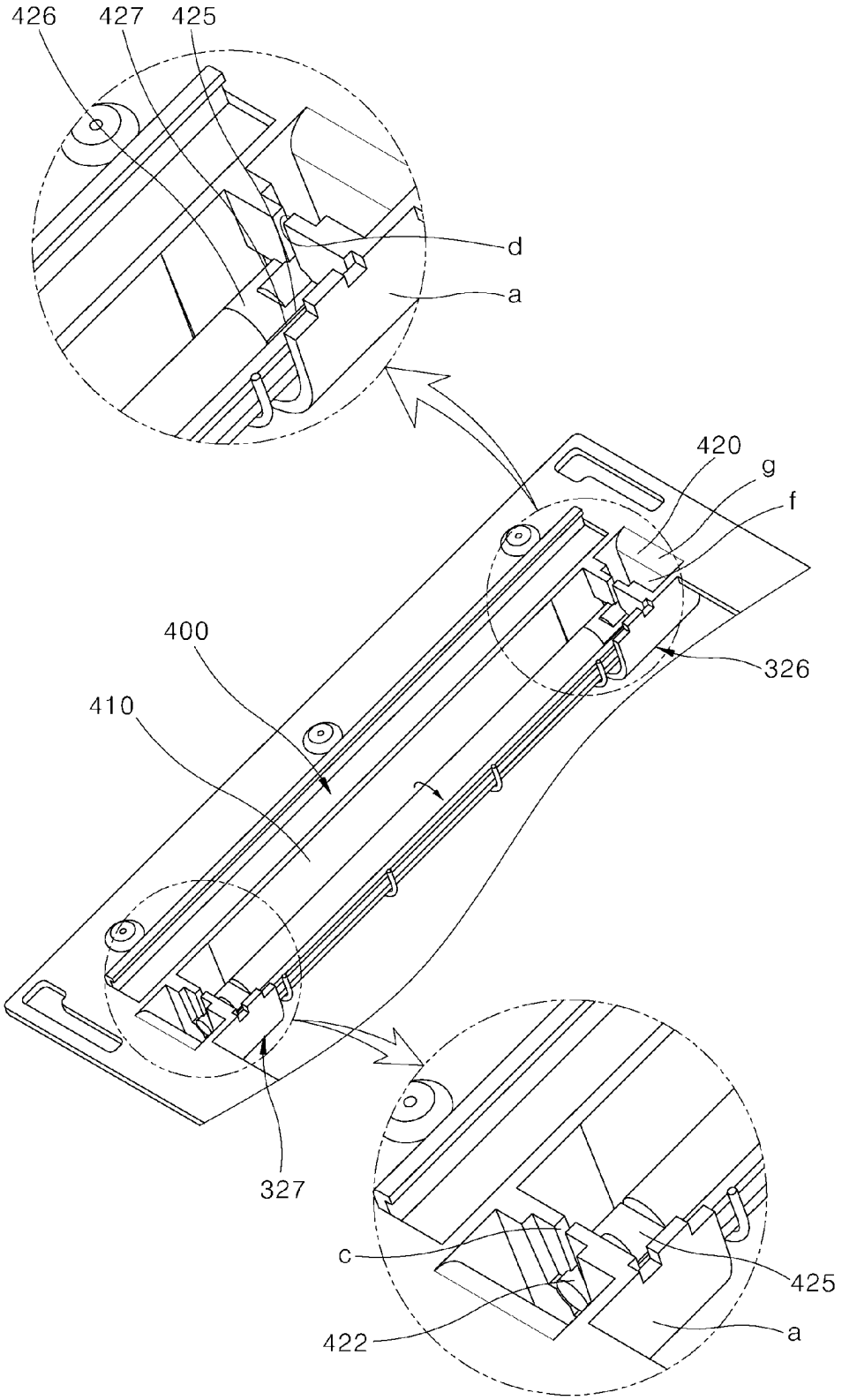

COOKING APPLIANCE

CROSS-REFERENCE TO RELATED APPLICATIONS

This application is a Continuation of U.S. patent application Ser. No. 16/739,623, filed Jan. 10, 2020, which claims the benefit of Korea Patent Application No. 10-2019-0004169 filed on Jan. 11, 2019, Korea Patent Application No. 10-2019-0038037 filed on Apr. 1, 2019, and Korea Patent Application No. 10-2019-0040379 filed on Apr. 5, 2019, the contents of which are all hereby incorporated by reference herein in their entirety.

BACKGROUND

1. Technical Field

The present disclosure relates to a cooking appliance, and more particularly, to a cooking appliance, such as an oven, provided to open and close a cooking compartment.

2. Background

Cooking appliances, which are one kind of home appliances that may be installed in a kitchen space for cooking food according to a user's intention. Cooking appliances may be classified in various ways according to heat sources or forms used therein or types of fuels used therein.

When classified according to the form of cooking food, cooking appliances may be classified into open cooking appliances and sealed cooking appliances according to the form of a space in which food is placed. For example, sealed cooking appliances may include an oven, a microwave oven, and the like, and open cooking appliances include a cooktop, a hob, and the like.

The sealed cooking appliances are cooking appliances that cook food by sealing a space in which food is located and heating the sealed space. The sealed cooking appliances are provided with a cooking compartment which is a space in which food is placed and which is sealed when cooking the food. The cooking compartment is substantially the space in which food is cooked.

The sealed cooking appliances are broadly classified into gas ovens and electric ovens according to the type of heat source. The gas ovens use gas as a fuel and cook food using flames generated as gas is supplied to a plurality of burners, and the burners are ignited, which burns the supplied gas. Unlike the gas ovens, the electric ovens use electricity as a heat source and cook food using heat emitted from a plurality of heaters, which are heated by the electricity.

Of the gas ovens and the electric ovens, the use of the electric ovens has increased due to a faster cooking speed, higher thermal efficiency, and better stability when compared with the gas ovens. Also, reducing the size of the electric ovens is easier than reducing the size of the gas ovens. Accordingly, the electric ovens in the form of mini ovens having a small size (hereinafter referred to as "mini ovens") have also been released.

The mini ovens have a small size, and thus are not suitable for cooking food of a large size but are suitable for baking or warming a small amount of food which does not require the use of large-capacity ovens.

Particularly, the mini ovens have advantages of being conveniently usable in toasting bread. In addition, the mini oven are usable in cooking a small amount of food or food

having a small size. Accordingly, the use of the mini ovens as cooking appliances for replacing conventional toasters has increased.

In general, the mini oven includes an outer case for housing all its components, a plurality of shelves for placing food during cooking, and a cooking compartment having an open front surface through which food may be placed in the cooking compartment and cooked.

Also, the mini oven includes an oven heater for heating food to an appropriate temperature, and a door for opening and closing the cooking compartment.

The oven heater may be disposed below the shelves, or may be disposed at an upper portion of the cooking compartment. The oven heater disposed below the shelf is mainly used to heat the shelves, and the oven heater disposed at the upper portion of the cooking compartment may be used to directly apply heat to food placed on the shelves.

The door is provided so that, while food is placed in the cooking compartment and cooked, the inside of the cooking compartment is closed from the outside environment and sealed. The door may include a handle for easily opening and closing the door and a glass window for viewing the inside of the cooking compartment without opening the door.

In the mini oven, the door is mostly provided as a downward opening type. That is, the door of the mini oven may have a lower end portion rotatably coupled to the outer case through a door hinge. The door opens the cooking compartment by rotating downward about the lower end portion rotatably coupled to the outer case and closes the cooking compartment by rotating upward when the cooking compartment is open.

The door may open the cooking compartment by rotating at an angle of about 90° when the cooking compartment is closed, and the shelves may be withdrawn or inserted while the cooking compartment is opened by the door.

That is, the door is opened in a state of being substantially parallel to the shelves inserted into the mini oven, and the withdrawal and insertion of the shelves are directly performed by the user.

However, the mini oven having the above configuration has the following disadvantages.

First, there is a problem in that, when the door is opened, the door inevitably protrudes from the front of the mini oven by as much as a height of the door. Thus, the opening of the door and the withdrawal and insertion of the shelves are difficult when the mini oven is installed in a narrow space.

Second, there is a problem in that, when the door is opened, the door protrudes from the front of the mini oven by as much as the height of the door, and the center of mass of the mini oven is biased towards the front.

Due to the characteristics of the mini oven being lightweight as well as having a small size, the center of mass of the mini oven is inevitably biased towards the front when the door opens forward from the mini oven. In this case, there is an increased risk that the mini oven may topple forward.

Particularly, when the shelves are withdrawn, the shelves are often placed on the door for checking a cooking state or temporarily placing the shelves. In such a structure in which the center of mass of the mini oven is biased towards the front, the risk of the mini oven toppling forward is inevitably increased.

Furthermore, the risk is greater when the weight of the shelves or foods placed on the shelves are heavy. This not only adds risks to the cooking of heavyweight foods but also causes an increase in the weight of the shelves. That is, even when it is necessary to adopt shelves formed of a thick,

heavy material to improve the cooking performance, adopting such shelves becomes difficult due to the risk of the mini oven toppling forward.

Third, various limitations occur because a passage for the withdrawal and insertion of the shelves and a passage for checking the cooking state are limited to the front side of the mini oven.

That is, since the directions of the withdrawal and insertion of the shelves are limited to a front-rear direction, inconvenience occurs during the withdrawal and insertion of the shelves when the mini oven is installed at a low place. Since the passage for checking the cooking state is limited to the glass window provided in the door, there is considerable inconvenience in checking the cooking state when the mini oven is installed at a low place.

Generally, for properly checking the cooking state of the entire food, opening the door is not enough, and the withdrawal of the tray should necessarily be performed.

That is, when the user wants to properly check the cooking state of the entire food, the user should open the door and then withdraw the shelf containing the entire food. However, when the mini oven is installed at a low place, it is very inconvenient to perform such tasks. Also the possibility that the user will be exposed to the risk of injuries such as burns when the user withdraws and inserts the shelf is also increased.

Taking the above problems into account, a structure of the door capable of opening the front and top of the cooking compartment together may be considered. This door may be provided in such a form that a front surface part disposed in the front of the cooking compartment and an upper surface part disposed on the top of the cooking compartment are integrally provided.

The door having this structure may be rotated about the rear thereof and open the cooking compartment, and due to the rotation of the door, the top of the cooking compartment may be opened together with the front of the cooking compartment.

Thus, directions in which the shelves are withdrawn and inserted may be expanded to the top-down direction in addition to the front-rear direction, and since the door does not protrude from the front of the mini oven when the door is opened, the center of mass of the mini oven is less biased forward. Further, since the opening for checking the cooking state when the door is opened is expanded to the top of the cooking compartment in addition to the front of the cooking compartment, checking of the cooking state may also be enhanced.

Meanwhile, in the mini oven to which the door having the structure as described above is adopted, the oven heater is inevitably installed on the door in order to dispose the oven heater on the upper portion of the cooking compartment. However, to install the oven heater on the door, a structure for coupling the oven heater to the door has to be provided on the door, and various components for electrical connection, which are required to supply power to the oven heater and to transmit control signals to the oven heater, have to be provided.

SUMMARY

Various embodiments are directed to providing a cooking appliance having an improved structure such that a heater may be installed on a door.

Also, various embodiments are directed to providing a cooking appliance having an improved structure such that various components that have to be disposed at a door may be stably installed on the door.

In addition, various embodiments are directed to providing a cooking appliance having an improved structure such that various components that have to be disposed at a door may be easily and promptly installed on the door and be easily disassembled for maintenance.

A cooking appliance according to an embodiment of the present disclosure to achieve these aspects includes a door frame that supports a first heating part and is coupled to a door, and thereby allows the first heating part to be disposed at the door.

The door frame may include a heater mounting part to which the first heating part is coupled, and a coupling part that is coupled with a door upper surface part and supports the heater mounting part on the door upper surface part.

With this configuration, the first heating part may be stably installed on the door, and a task of installing the first heating part may be efficiently performed.

Further, a shielding plate to which a reflector is coupled may be provided on the door frame.

Further, a grille fixing part to which a protective grille is fixed may be provided on the door frame.

Further, a seating surface on which a glass is seated may be formed on the door frame.

Further, a restricting rib and a stopper that restrict movement of the glass seated on the seating surface may be provided on the door frame.

With this configuration, the structures for fixing the components such as the glass, the reflector, and the protective grille, in addition to the first heating part, to the door frame may be provided on the door frame, and a frame in which the components such as the first heating part, the glass, the reflector, and the protective grille may be assembled into a single unit body by the door frame may be provided.

A cooking appliance according to an embodiment of the present disclosure includes: a housing in which a cooking compartment is formed and whose upper and front surfaces are open, the cooking compartment being surrounded by a bottom surface, both side surfaces, and a back surface of the housing; a door that includes a door upper surface part that covers the upper surface of the housing and a door front surface part that is connected to a front side of the door upper surface part and covers the front surface of the housing, is rotated about a rear side of the door upper surface part, and opens and closes the upper and front surfaces of the housing; a first heating part disposed at the door; and a door frame that supports the first heating part and is coupled to the door.

The door frame may cover a lower portion of the door upper surface part and/or may be coupled with the door. The first heating part may be installed on the door frame and/or may be disposed at the lower portion of the door upper surface part.

Further, the door frame may include: a heater mounting part to which the first heating part is coupled. The door frame may include a coupling part that is coupled with the door upper surface part and supports the heater mounting part on the door upper surface part.

Further, the first heating part may include an electric heater having a heating element, a first connecting end disposed at an end of one side of the heating element in a longitudinal direction, and a second connecting end disposed at an end of the other side of the heating element in the longitudinal direction. The heater mounting part may include a first connecting end fixing part that fixes the first

connecting end and a second connecting end fixing part that fixes the second connecting end.

Further, at least one of the first connecting end fixing part and the second connecting end fixing part may include: a cover that surrounds surrounding portions of the connecting end from an outer side of the connecting end in a circumferential direction. At least one of the first connecting end fixing part and the second connecting end fixing part may further include a support wall which partitions a space surrounded by the cover into inner and outer spaces of the first heating part in a longitudinal direction and into which the connecting end is fitted.

Further, the heating element may be formed in the shape of a rod having a predetermined length. At least one of the first connecting end and the second connecting end may include a cylindrical part that is formed in a cylindrical shape and is disposed at each of opposite ends of the heating element in the longitudinal direction. At least one of the first connecting end and the second connecting end may include a key-shaped part that is disposed between the heating element and the cylindrical part. is the key-shaped part may be formed in a flat hexahedral shape whose thickness is smaller than a diameter of the cylindrical part and whose width is larger than the diameter of the cylindrical part. The support wall may include a coupling hole that is formed to pass through the support wall and is formed in a shape corresponding to a shape of an outer circumferential surface of the cylindrical part. The support wall may include a through-hole that is formed to pass through the support wall and is formed as a passage that connects the coupling hole and an outer portion of the support wall to each other.

Further, the through-hole may be formed with a width corresponding to the thickness of the key-shaped part.

Further, at least one of the first connecting end and the second connecting end may pass through the through-hole and/or may be inserted into the coupling hole in a state in which the first heating part takes a first posture. The first posture may be a posture in which a surface parallel to a thickness direction of the key-shaped part is disposed parallel to a width direction of the through-hole.

Further, the cylindrical part may further include an extension part that is formed to extend toward the key-shaped part. The extension part may be formed to protrude outward from a surface parallel to a width direction of the key-shaped part so that a step is formed on the surface parallel to the width direction of the key-shaped part.

Further, a separation distance (L1) between the support wall of the first connecting end fixing part and the support wall of the second connecting end fixing part may satisfy conditions that $LH=LH1+2LH2+2LH3$ and $L1=LH-LH2-LH3$, where LH is an entire length of the first heating part, LH1 is a length of the heating element, LH2 is a distance between the end of one side of the heating element and the step, and LH3 is a distance between the step and an outermost end of the cylindrical part.

Further, the separation distance (L1) between the support wall of the first connecting end fixing part and the support wall of the second connecting end fixing part may satisfy a condition that $L1=LH1+2LH4$ where LH4 is a length of the key-shaped part.

Further, the cooking appliance may further include an outer wall disposed outside the support wall in the longitudinal direction of the heating element. A separation distance (L2) between the support wall and the outer wall may satisfy a condition that $L2 \geq LH3$.

Further, at least a part of the cylindrical part may be inserted into a space surrounded by the cover, the support wall. The outer wall, and the outer wall may be connected to the coupling part. A concave groove recessed from an upper surface of the coupling part may be formed in a connecting portion between the outer wall and the coupling part.

Further, the through-hole may be formed inside the coupling part in a planar direction. Glasses covering the through-hole are disposed at the upper portion of the heater mounting part. Seating surfaces on which the glasses are seated may be formed on the inner surface of the coupling part adjacent to the through-hole. The concave groove is preferably formed as a surface recessed downward from the seating surfaces.

Further, the cooking appliance may further include a shielding plate that is disposed at a side farther from the center of the cooking compartment in a front-rear direction than the first heating part. The shielding plate may connect the first connecting end fixing part and the second connecting end fixing part to each other.

Further, the cooking appliance may further include a protective grille disposed to be spaced apart from the shielding plate with the first heating part interposed therebetween.

Further, the protective grille may include a plurality of steel wires that extend in the longitudinal direction of the first heating part. The protective grille may include a plurality of fixing members that extend in a direction in which the plurality of steel wires are arranged and fix the plurality of steel wires. The plurality of steel wires may be arranged to surround a surrounding portion of the first heating part from an outside of the first heating part in a circumferential direction.

Further, at least one of the first connecting end fixing part and the second connecting end fixing part may further include a grille fixing part that fixes the steel wires to the heater mounting part. The grille fixing part may include a plurality of fixing ribs that are formed to protrude from the cover toward the first heating part. The plurality of steel wires may be fitted into fixing grooves formed between the plurality of fixing ribs.

Further, a through-hole may be formed inside the coupling part in a planar direction. A glass that covers the through-hole may be disposed at an upper portion of the heater mounting part.

Further, the cooking appliance may further include a shielding plate that is disposed at a side farther from the center of the cooking compartment in a front-rear direction than the first heating part and connects the first connecting end fixing part and the second connecting end fixing part to each other. The cooking appliance may further include a reflector that reflects heat of the first heating part while blocking the first heating part and the shielding plate from each other and blocking the first heating part and the glass from each other.

In addition, seating surfaces on which the glass is seated may be formed at an inner side surface of the coupling part adjacent to the through-hole. The seating surfaces may be disposed on both sides of the through-hole in a left-right direction. The coupling part may include a restricting rib that is disposed at one side of the through-hole in the front-rear direction and may restrict movement of the glass to one side in the front-rear direction and movement of the glass in an upward direction. The coupling part may include a stopper that is disposed at the other side of the through-hole in the front-rear direction and restricts movement of the glass to the other side in the front-rear direction.

The cooking appliance of the present disclosure may be configured such that the structures for allowing the first heating part to be easily and promptly installed on the door frame are provided on the door frame, and the door frame can be easily and promptly installed on the door, thereby providing an effect of allowing the first heating part to be stably installed on the door and allowing the task of installing the first heating part to be efficiently performed.

Further, according to the present disclosure, the structures for fixing the components such as the glass, the reflector, and the protective grille, in addition to the first heating part, to the door frame may be provided on the door frame, and a frame in which the components such as the first heating part, the glass, the reflector, and the protective grille can be assembled into a single unit body by the door frame is provided. Thus, an effect of allowing various components, which have to be disposed at the door, to be installed on the door easily, promptly and stably is provided.

Further, according to the present disclosure, the door frame may be coupled to the door upper surface part, and be provided to allow the components provided in the door to be protected and disassembled easily as needed. Thus, an effect of stably protecting the internal components can be provided along with an effect of allowing a maintenance task of the cooking appliance to be easily and promptly performed.

Also, since an expanded passage is provided so that a user may easily and conveniently insert or withdraw food or the tray into or from the cooking compartment and, at the same time, the tray is allowed to be automatically withdrawn or inserted when the door is opened or closed, a function of allowing the withdrawal and insertion of food or the tray to be more easily and conveniently performed may be provided.

Also, since the door is provided to be able to open both a front surface and an upper surface of a cooking compartment by rotating upward without being unfolded forward, opening of the door may be easily and smoothly performed even in a narrow space and the withdrawal of food or a tray may be more easily and conveniently performed.

Since both the front surface and the upper surface of the cooking compartment may be opened by the door and a tray part is exposed to a greater extent due to the opening of the door, an object to be cooked may be easily put in or taken out even when only a portion of the tray is withdrawn. Thus, improved convenience and stability may be provided.

Also, according to the present disclosure, since the door is provided to be opened by rotating upward without being unfolded forward, there is little concern about the center of mass of the cooking appliance being biased towards the front even when the door is opened. Accordingly, there is an advantageous effect in that the risk of the cooking appliance toppling forward is significantly lowered.

Also, according to the present disclosure, since the center of rotation of the door is formed at the rear side of the cooking appliance, the center of mass of the door is formed to be biased towards a door upper surface part than toward a door front surface part, and the center of mass of the cooking appliance is formed to be biased towards the rear side of the cooking appliance when the door is opened, there are advantageous effects in that the risk of the cooking appliance toppling forward is significantly lowered, and thus safety and convenience in use of the cooking appliance are improved.

Also, since the present disclosure provides the cooking appliance having a stable structure in which the risk of the cooking appliance toppling forward is significantly low, there is an advantageous effect in that it is possible to freely adopt a tray whose thickness and weight are increased to improve the cooking performance or a tray which is usable in an environment being heated by an induction heating part.

According to an aspect of the present disclosure, a cooking appliance comprises: a housing in which a cooking compartment is formed and whose upper and front surfaces are open, the cooking compartment being surrounded by a bottom surface, both side surfaces, and a back surface of the housing; a door that includes a door upper surface part that covers the upper surface of the housing and a door front surface part that is connected to a front side of the door upper surface part and covers the front surface of the housing, is rotated about a rear side of the door upper surface part, and opens and closes the upper and front surfaces of the housing; a first heating part disposed at the door; and a door frame that supports the first heating part and is coupled to the door.

Within the context of the present disclosure, the expression "bottom/side/back surface", may be understood as and substituted respectively by the expression "bottom/side/back wall", "bottom/side/back plate" or "bottom/side/back portion". That is, the door may be rotatable about an upper edge of the back part of the housing or about an axis parallel thereto and/or about a rear edge of the door upper surface part or about an axis parallel thereto.

The door frame may cover a lower portion of the door upper surface part and/or may be coupled with the door.

The first heating part may be installed on the door frame, and/or may be disposed at the lower portion of the door upper surface part.

The door frame may include: a heater mounting part to which the first heating part is coupled; and may include a coupling part that may be coupled with the door upper surface part and may support the heater mounting part on the door upper surface part.

The first heating part may include an electric heater having a heating element, a first connecting end disposed at an end of one side of the heating element in a longitudinal direction, and a second connecting end disposed at an end of the other side of the heating element in the longitudinal direction.

The heater mounting part may include a first connecting end fixing part that fixes the first connecting end. The heater mounting part may include a second connecting end fixing part that fixes the second connecting end.

At least one of the first connecting end fixing part and the second connecting end fixing part may include: a cover that surrounds surrounding portions of the connecting end from an outer side of the connecting end in a circumferential direction. At least one of the first connecting end fixing part and the second connecting end fixing part may include may further include a support wall which partitions a space surrounded by the cover into inner and outer spaces of the first heating part in a longitudinal direction and into which the connecting end may be fitted.

The heating element may be formed in the shape of a rod having a predetermined length.

At least one of the first connecting end and the second connecting end may include a cylindrical part that may be formed in a cylindrical shape and may be disposed at each of opposite ends of the heating element in the longitudinal direction. t least one of the first connecting end and the second connecting end may include a key-shaped part that may be disposed between the heating element and the cylindrical part. The key-shaped part may be formed in a flat hexahedral shape whose thickness is smaller than a diameter of the cylindrical part and whose width is larger than the diameter of the cylindrical part.

The support wall may include a coupling hole that may be formed to pass through the support wall. The coupling hole may be formed in a shape corresponding to a shape of an outer circumferential surface of the cylindrical part. The support wall may include a through-hole that may be formed to pass through the support wall. The through-hole may be formed as a passage that connects the coupling hole and an outer portion of the support wall to each other.

The through-hole may be formed with a width corresponding to the thickness of the key-shaped part.

At least one of the first connecting end and the second connecting end may pass through the through-hole and may be inserted into the coupling hole in a state in which the first heating part takes a first posture. The first posture may be a posture in which a surface parallel to a thickness direction of the key-shaped part is disposed parallel to a width direction of the through-hole.

The cylindrical part may further include an extension part that may be formed to extend toward the key-shaped part.

The extension part may be formed to protrude outward from a surface parallel to a width direction of the key-shaped part so that a step may be formed on the surface parallel to the width direction of the key-shaped part.

A separation distance L1 between the support wall of the first connecting end fixing part and the support wall of the second connecting end fixing part may satisfy the following relational expression:

$$LH=LH1+2LH2+2LH3$$

$$L1=LH-LH2-LH3$$

where LH is an entire length of the first heating part, LH1 is a length of the heating element, LH2 is a distance between the end of one side of the heating element and the step, and LH3 is a distance between the step and an outermost end of the cylindrical part.

The separation distance L1 between the support wall of the first connecting end fixing part and the support wall of the second connecting end fixing part may satisfy the following relational expression:

$$L1=LH1+2LH4$$

where LH4 is a length of the key-shaped part.

The cooking appliance may further comprise an outer wall disposed outside the support wall in the longitudinal direction of the heating element.

A separation distance L2 between the support wall and the outer wall satisfies the following relational expression:

$$L2 \geq LH3.$$

The cooking appliance may further comprise a shielding plate disposed at a side farther from the center of the cooking compartment in a front-rear direction than the first heating part. The shielding plate may connect the first connecting end fixing part and the second connecting end fixing part to each other.

The cooking appliance may further comprise a protective grille disposed to be spaced apart from the shielding plate with the first heating part interposed therebetween.

The protective grille may include a plurality of steel wires that may extend in the longitudinal direction of the first heating part. The protective grille may include a plurality of fixing members that may extend in a direction in which the plurality of steel wires are arranged and may fix the plurality of steel wires.

The plurality of steel wires may be arranged to surround a surrounding portion of the first heating part from an outside of the first heating part in a circumferential direction.

At least one of the first connecting end fixing part and the second connecting end fixing part may further include a grille fixing part that may fix the steel wires to the heater mounting part.

The grille fixing part may include a plurality of fixing ribs that may be formed to protrude from the cover toward the first heating part.

The plurality of steel wires may be fitted into fixing grooves formed between the plurality of fixing ribs.

BRIEF DESCRIPTION OF THE DRAWINGS

FIG. **1** is a perspective view illustrating a cooking appliance according to an embodiment of the present disclosure.

FIG. **2** is a perspective view illustrating a door-opened state of the cooking appliance illustrated in FIG. **1**.

FIG. **3** is an exploded perspective view illustrating an exploded state of the cooking appliance illustrated in FIG. **1**.

FIG. **4** is a perspective view separately illustrating a housing and hinge assemblies illustrated in FIG. **1**.

FIG. **5** is a perspective view separately illustrating a door according to an embodiment of the present disclosure.

FIG. **6** is a bottom perspective view illustrating a bottom surface side of the door illustrated in FIG. **5**.

FIG. **7** is an exploded perspective view illustrating configuration of the door illustrated in FIG. **6** in an exploded manner.

FIG. **8** is a cross-sectional view taken along line "VIII-VIII" of FIG. **7**.

FIG. **9** is a cross-sectional view taken along line "IX-IX" of FIG. **6**.

FIG. **10** is a cross-sectional view schematically illustrating a flow of air inside the door according to an embodiment of the present disclosure.

FIG. **11** is a perspective view illustrating a tray according to an embodiment of the present disclosure.

FIG. **12** is a cross-sectional view schematically illustrating a coupling structure between the tray illustrated in FIG. **11** and a mounting protrusion.

FIG. **13** is a cross-sectional view schematically illustrating a coupling structure between the tray and the mounting protrusion according to another embodiment of the present disclosure.

FIG. **14** is a view illustrating a coupling process between the tray and the mounting protrusion illustrated in FIG. **13**.

FIG. **15** is a cross-sectional view schematically illustrating a coupling structure between the tray and the mounting protrusion according to another embodiment of the present disclosure.

FIG. **16** is a view illustrating a coupling process between the tray and the mounting protrusion illustrated in FIG. **15**.

FIG. **17** is a perspective view illustrating a door-closed state of the cooking appliance according to an embodiment of the present disclosure.

FIG. **18** is a cross-sectional view taken along line "XVIII-XVIII" of FIG. **17**.

FIG. **19** is a cross-sectional view taken along line "XIX-XIX" of FIG. **17**.

FIG. **20** is a perspective view illustrating a door-opened state of the cooking appliance illustrated in FIG. **17**.

FIG. **21** is a cross-sectional view taken along line "XXI-XXI" of FIG. **20**.

FIG. **22** is a cross-sectional view taken along line "XXII-XXII" of FIG. **20**.

FIG. **23** is a view illustrating a center-of-mass change state in the door-opened state of the cooking appliance.

FIG. **24** is an exploded perspective view of the tray illustrated in FIG. **11**.

FIG. **25** is a cross-sectional view taken along line "XXV-XXV" of FIG. **11**.

FIG. **26** is an exploded perspective view separately illustrating a housing and a second heating part according to an embodiment of the present disclosure.

FIG. **27** is a plan view illustrating the second heating part illustrated in FIG. **26**.

FIG. **28** is an exploded perspective view separately illustrating the second heating part illustrated in FIG. **26**, a receiver coil, and an electromagnetic shielding plate.

FIG. **29** is a cross-sectional view illustrating a coupled state among the second heating part illustrated in FIG. **26**, a temperature sensor, the receiver coil, and the electromagnetic shielding plate.

FIG. **30** is a rear view illustrating a second control board illustrated in FIG. **26**.

FIG. **31** is an exploded perspective view illustrating a door frame and elements installed in the door frame according to an embodiment of the present disclosure.

FIG. **32** is an exploded perspective view illustrating the door frame and the elements installed in the door frame, which are illustrated in FIG. **31**.

FIG. **33** is an enlarged view of portions of the door frame and the elements installed in the door frame, which are illustrated in FIG. **31**.

FIG. **34** is a view illustrating a state in which a first heating part and a protective grille are removed from the door frame illustrated in FIG. **33**.

FIGS. **35** to **39** are views for showing a process in which the first heating part is installed in the door frame.

DETAILED DESCRIPTION

The above-mentioned aspects, features, and advantages will be described in detail with reference to the accompanying drawings, and accordingly, those of ordinary skill in the art to which the present disclosure pertains should be able to easily practice the technical idea of the present disclosure. In describing the present disclosure, when detailed description of known art related to the present disclosure is deemed as having a possibility of unnecessarily blurring the gist of the present disclosure, the detailed description may be omitted. Hereinafter, exemplary embodiments according to the present disclosure will be described in detail with reference to the accompanying drawings. Like reference numerals in the drawings may refer to like or similar elements throughout.

Terms such as first and second are used to describe various elements, but the elements are of course not limited by the terms. The terms are merely used for distinguishing one element from another element, and a first element may also be a second element unless particularly described otherwise.

Hereinafter, when it is said that an arbitrary element is disposed at "an upper portion (or a lower portion)" of an element or disposed "above (or below)" an element, this may not only mean that the arbitrary element is disposed in contact with an upper surface (or a lower surface) of the element, but also mean that another element may be interposed between the element and the arbitrary element disposed above (or below) the element.

Also, when it is said that a certain element is "connected" or "coupled" to another element, this may mean that the elements are directly connected or coupled to each other, but it should be understood that another element may be "interposed" between the elements or the elements may be "connected" or "coupled" to each other via another element.

Through the specification, each element may be singular or plural unless particularly described otherwise.

A singular expression used herein encompasses a plural expression unless the context clearly indicates otherwise. In the present disclosure, terms such as "consisting of" or "including" should not be interpreted as necessarily including all of various elements or various steps described herein and should be interpreted as indicating that some of the elements or some of the steps may not be included or additional elements or steps may be further included.

Throughout the specification, "A and/or B" may refer to A, B, or A and B unless particularly described otherwise, and "C to D" refers to C or more and D or less unless particularly described otherwise.

FIG. **1** is a perspective view illustrating a cooking appliance according to an embodiment of the present disclosure, FIG. **2** is a perspective view illustrating a door-opened state of the cooking appliance illustrated in FIG. **1**, and FIG. **3** is an exploded perspective view illustrating an exploded state of the cooking appliance illustrated in FIG. **1**.

Referring to FIGS. **1** to **3**, the cooking appliance according to an embodiment of the present disclosure may include a housing **100**, a door **300**, a tray **200**, and heating parts **400** and **600**.

The housing **100** forms a frame of the cooking appliance according to the present embodiment. According to this, various components constituting the cooking appliance are installed in the housing **100**. A cooking compartment **105** which provides a space for cooking food is formed inside the housing **100**.

In the present embodiment, the housing **100** is illustrated as being formed in a hexahedral shape with open upper and front surfaces. That is, the housing **100** includes a bottom surface **110**, a pair of side surfaces **120** and **130**, and a back surface **140**, which forms a space therein, and is provided in a form in which the upper surface and the front surface may open. The cooking compartment **105** surrounded by the bottom surface **110**, both the side surfaces **120** and **130**, and the back surface **140** of the housing **100** is formed inside the housing **100**.

The tray **200** is disposed in the cooking compartment **105** inside the housing **100**. The tray **200** is provided so that an object to be cooked is seated thereon. The tray **200** may be detachably installed inside the cooking compartment **105**. Also, for convenience of a user, the tray **200** may be provided to be withdrawable from the front side of the cooking compartment **105**.

The tray **200** may be installed to be movable in a front-rear direction by interlocking with an operation of opening or closing the door **300**, and the movement of the tray **200** in the front-rear direction may be guided by hinge assemblies **800** which will be described below.

The door **300** is provided to open or close the open upper and front surfaces of the housing **100**. In the present embodiment, the housing **100** forms an exterior of a bottom surface, side surfaces, and a back surface of the cooking appliance while the door **300** forms an exterior of an upper surface and a front surface of the cooking appliance. The door **300** may include a door upper surface part **310** and a door front surface part **350**.

The door upper surface part **310** forms an upper surface of the door **300** and corresponds to an element which covers the open upper surface of the housing **100** when the door **300** closes the cooking compartment **105** inside the housing **100**. Also, the door front surface part **350** forms a front surface

of the door **300** and corresponds to an element which covers the open front surface of the housing **100** when the door **300** closes the cooking compartment **105**.

In the present embodiment, the door **300** is illustrated as being formed in an L-shape. That is, at the door **300**, the door upper surface part **310** forming the upper surface of the door **300** and the door front surface part **350** forming the front surface of the door **300** are formed in the form of being connected to each other in an L-shape. The door **300** formed in this way opens or closes the cooking compartment **105** as the door upper surface part **310** and the door front surface part **350** connected to each other in an L-shape rotate together when the door **300** rotates for opening or closing the cooking compartment **105**.

The door **300** is rotatably installed at an upper portion of the housing **100** and is rotatably coupled to the housing **100** via the hinge assemblies **800** installed at the housing **100**. In this case, the hinge assemblies **800** are disposed at each side portions of the housing **100**, and a rear side of the door upper surface part **310** is rotatably coupled to the hinge assemblies **800**.

Also, a handle **305** may be provided at the front surface of the door **300**, and a user may open or close the cooking compartment **105** by holding the handle **305** and rotating the door **300** in the up-down direction.

The heating parts **400** and **600** may be installed at the housing **100** and/or the door **300** to heat the tray **200** disposed in the cooking compartment **105**. In the present embodiment, the heating parts **400** and **600** are illustrated as including a first heating part **400** disposed at the door **300** and a second heating part **600** disposed in the housing **100**.

The first heating part **400** is installed at the door **300** such that, when the door **300** closes the cooking compartment **105**, the first heating part **400** is housed inside the cooking compartment **105**. The first heating part **400** is installed at the door upper surface part **310** in such a way that the first heating part **400** is disposed at a bottom surface side of the door upper surface part **310** facing the bottom surface of the housing **100**.

In the present embodiment, the first heating part **400** is illustrated as being provided in the form including an electric heater. The first heating part **400** may heat the object to be cooked which is seated on the tray **200** from an upper portion of the object.

The second heating part **600** is installed at the housing **100**, and is disposed at a lower portion of the tray **200**. The second heating part **600** is provided in the form of a heating part which heats the tray **200** using a different heating method from the first heating part **400**, e.g., an induction heating part.

The second heating part **600** may be provided in the form including a working coil **610** installed at a lower portion of the bottom surface **110** of the housing **100** and may induce heating of the tray **200** from the lower portion of the bottom surface **110**. To this end, the tray **200** may be formed of a material which may be inductively heated by the second heating part **600**.

In summary, the cooking appliance according to the present embodiment includes the housing **100** in which the cooking compartment **105** is formed, the door **300** provided to be able to simultaneously open the front and the top of the cooking compartment **105**, the first heating part **400** provided to be able to heat the inside of the cooking compartment **105** from the top, and the second heating part **600** provided to be able to inductively heat the tray **200** inside the cooking compartment **105**, wherein the withdrawal and insertion of the tray **200** may be performed by interlocking with the operation of opening or closing the door **300**.

Detailed descriptions of the above-mentioned elements and other elements not mentioned yet will be sequentially given below.

FIG. **4** is a perspective view separately illustrating a housing and hinge assemblies illustrated in FIG. **1**.

Referring to FIGS. **3** and **4**, as described above, the housing **100** includes the bottom surface **110**, the pair of side surfaces **120** and **130**, and the back surface **140**, which forms a space therein, and is provided in the form in which the upper surface and the front surface are open.

The cooking compartment **105** may be formed in the inner space surrounded by the bottom surface **110**, both the side surfaces **120** and **130**, and the back surface **140** of the housing **100**, and the tray **200** may be installed in the cooking compartment **105** so as to be withdrawable therefrom.

Also, the second heating part **600** may be installed at the lower portion of the bottom surface of the housing **100**, and an electronic component, e.g., a second control board **700** which will be described below, related to operation of the second heating part **600** may be installed at the rear of the back surface of the housing **100**.

Further, the hinge assemblies **800** may be installed at outer sides of the side surfaces **120** and **130** of the housing **100**, and the door **300** may be rotatably installed at the housing **100** by being coupled to the hinge assemblies **800** installed as above.

As one example, the housing **100** may be produced in such a form that a metal plate is bent in a U-shape and the metal plate bent in this way forms the bottom surface and both side surfaces of the housing **100**. When the housing **100** is produced in this form, the bottom surface **110** of the housing **100** may be integrally connected to both side surfaces **120** and **130** of the housing **100** without a joint.

Thereby, internal aesthetic of the cooking compartment **105** may be improved, and an effect of preventing foreign materials from being jammed in gaps between the bottom surface **110** and both side surfaces **120** and **130** of the housing **100** or preventing the foreign materials from coming out through the gaps to contaminate the second heating part **600** may be obtained.

As another example, the housing **100** may be produced in such a form that a metal plate includes left and right protrusion portions forming a T-shape which are bent upward to form the bottom surface **110** and both the side surfaces **120** and **130** of the housing **100**, and a rear protrusion portion is bent upward to form the back surface **140** of the housing **100**. When the housing is produced in this form, the bottom surface **110**, both the side surfaces **120** and **130**, and the back surface **140** of the housing **100** may be integrally formed without joints between the bottom surface **110** and both the side surfaces **120** and **130** of the housing **100**, and between the bottom surface **110** and the back surface **140** of the housing **100**.

Thereby, when viewed from the front and the top, an inner surface of the cooking compartment **105** may maintain a smooth surface where internal joints of the cooking compartment **105** are nearly not seen. Thus, the internal aesthetic of the cooking compartment **105** may be further improved, and an effect of easily removing contaminants attached to the inner surface of the cooking compartment **105** may be additionally obtained.

Meanwhile, the bottom surface **110** of the housing **100** may include a ceramic glass. The ceramic glass may have the shape of a rectangular flat plate having a prescribed thickness.

For example, the ceramic glass may be disposed at a cut middle portion of the bottom surface **110** formed of a metal material. The ceramic glass may be disposed between the second heating part **600** and the tray **200**.

Also, a back surface case **150** which houses the second control board **700** which will be described below is disposed at the rear of the back surface **140** of the housing **100**. The second control board **700** is housed in the back surface case **150** and installed at the rear of the housing **100**, and an insulating plate **160** is disposed between the back surface **140** of the housing **100** and the back surface case **150**.

The insulating plate **160** serves to block transfer of hot air from the inside of the cooking compartment **105** to the second control board **700** via the back surface **140** of the housing **100** and insulate the housing **100** and the back surface case **150**, in which the second control board **700** is installed, from each other.

Further, the housing **100** of the present embodiment may further include a cabinet **170**. The cabinet **170** is provided to cover both the side surfaces **120** and **130** and the back surface **140** of the housing **100**. The cabinet **170** may surround and protect the hinge assemblies **800** installed at both the side surfaces **120** and **130** of the housing **100** and the second control board **700** installed at the back surface **140** of the housing **100** from the outside and form an exterior of the side portions and the rear of the cooking appliance.

FIG. **5** is a perspective view separately illustrating a door according to an embodiment of the present disclosure, and FIG. **6** is a bottom perspective view illustrating a bottom surface side of the door illustrated in FIG. **5**. Also, FIG. **7** is an exploded perspective view illustrating configuration of the door illustrated in FIG. **6** in an exploded manner, and FIG. **8** is a cross-sectional view taken along line "VIII-VIII" of FIG. **7**. Also, FIG. **9** is a cross-sectional view taken along line "IX-IX" of FIG. **6**, and FIG. **10** is a cross-sectional view schematically illustrating a flow of air inside the door according to an embodiment of the present disclosure.

Referring to FIGS. **5** to **9**, the door **300** is provided in the form in which the door upper surface part **310** forming the upper surface of the door **300** and the door front surface part **350** forming the front surface of the door **300** are integrally connected to each other in an L-shape.

The door upper surface part **310** may be formed in a quadrilateral shape such that the door upper surface part **310** is formed in a rectangular shape in which a front-rear length is longer than a left-right length. A door frame **320** may be installed at the door upper surface part **310**. The door frame **320** may be installed at a lower portion of the door upper surface part **310**, and the first heating part **400** may be installed at the lower portion of the door upper surface part **310** while being coupled to the door frame **320**.

The door **300** may include a see-through window W. The see-through window W may be disposed at the door upper surface part **310** such that the see-through window W is provided to be located at a central portion of the door upper surface part **310** in a planar direction.

The see-through window W may include a pair of glasses **330** and **335** which are disposed to be spaced a predetermined distance apart from each other in the up-down direction so that a space portion is formed inside the see-through window W. For example, of the glasses **330** and **335**, the glass **330** (hereinafter referred to as "first glass") may be installed at the door upper surface part **310**, and the other glass **335** (hereinafter referred to as "second glass") may be installed at the door frame **320**.

A through-hole may be formed in each of the door upper surface part **310** and the door frame **320**. The through-holes may be formed at the center of the door upper surface part **310** in the planar direction and at the center of the door frame **320** in the planar direction, respectively.

According to the present embodiment, the first glass **330** is installed in the door upper surface part **310** in such a way that the through-hole formed in the door upper surface part **310** is covered by the first glass **330** from the top, and the second glass **335** is installed in the door frame **320** in such a way that the through-hole formed in the door frame **320** is covered by the second glass **335** from the top.

The first glass **330** and the second glass **335** may be formed of glass formed of a transparent or translucent material. The see-through window W may be formed at portions of the through-holes covered by the first glass **330** and the second glass **335**.

The user may view the inside of the cooking compartment **105** from the top through the see-through window W formed as above, and in this way, a cooking state of food inside the cooking compartment **105** may be checked. Due to characteristics of a mini oven, the cooking appliance of the present embodiment is often used at a point which is significantly lower than the user's face. Therefore, the see-through window W formed at the upper surface of the door **300** may be provided as a means that allows the user to easily and conveniently check the cooking state of food without lowering their posture or bending their waist forward.

Further, the pair of glasses **330** and **335** forming the see-through window W are coupled to different elements, that is, one is coupled to the door upper surface part **310** and the other is coupled to the door frame **320**, and are disposed to be spaced a predetermined distance apart from each other. Accordingly, a separation space between the two glasses **330** and **335** is formed inside the see-through window W.

An air layer formed in the separation space formed in this way serves to block transfer of heat, which has heated the second glass **335** directly exposed to the cooking compartment **105**, to the first glass **330** disposed at the door upper surface part **310**.

In this way, the see-through window W provided in the double-window structure as described above has a function of preventing, to a significant level, the occurrence of safety accidents caused by the overheating of the see-through window W, the occurrence of steaming up of the see-through window W due to a temperature rise of the see-through window W, and the like.

Meanwhile, the first heating part **400** is installed at the door upper surface part **310** in such a way that the first heating part **400** is disposed in a region not exposed through the see-through window W when viewed from the top. The first heating part **400** is disposed at a front outer side and a rear outer side of the see-through window W on a plane in a horizontal direction corresponding to the door upper surface part **310**. In other words, the first heating part **400** may be disposed at outer sides of the through-holes formed in the door upper surface part **310** and the door frame **320**. That is, the cooking appliance of the present embodiment may include a pair of first heating parts **400** disposed at the front outer side and the rear outer side of the see-through window W.

When the first heating part **400** is disposed in a region exposed through the see-through window W, it is aesthetically not desirable. Also a problem may occur in securing the field of view through the see-through window W, and a

problem in that a temperature of a portion of the see-through window W rises may also occur.

Also, in consideration of the shape of the door front surface part **350** having a rectangular shape in which a front-rear length is longer than a left-right length, the first heating part **400** should be disposed at the front outer side and the rear outer side of the see-through window W for a length of the first heating part **400** to be increased accordingly, and improvement in thermal power of the first heating part **400** may be expected in proportion to the increase in the length of the first heating part **400**.

In consideration of such aspects, the first heating part **400** is disposed at each of the front outer side and the rear outer side of the see-through window W. In this way, it may be advantageous to secure functional advantages such as maintaining aesthetics, maintaining a secured field of view, suppressing a temperature rise of the see-through window W, and improving the thermal power of the first heating part **400**.

The door front surface part **350** may be formed in a rectangular shape like the door upper surface part **310**. However, when the door upper surface part **310** forms a plane in the horizontal direction, the door front surface part **350** forms a plane in a vertical direction.

For example, the door front surface part **350** may be formed extending downward from a front end portion of the door upper surface part **310**. Also, the door front surface part **350** and the door upper surface part **310** may be connected in the form in which an inner space of the door front surface part **350** and an inner space of the door upper surface part **310** are connected to each other. That is, the door **300** may be provided in the form in which the door front surface part **350** and the door upper surface part **310**, whose inner spaces are connected to each other, are integrally connected in an L-shape.

An input part **360** and a first control board **500** may be disposed in the door front surface part **350**. In the present embodiment, a space portion is illustrated as being formed inside the door front surface part **350** (see FIG. **9**). In the space portion, at least a portion of the input part **360** and the first control board **500** may be housed.

The input part **360** may include various manipulation switches for controlling and manipulating operation of the cooking appliance according to the present embodiment. For example, the input part **360** may include a manipulation switch for controlling on/off states or thermal power of the first heating part **400**, a manipulation switch for controlling on/off states or thermal power of the second heating part **600**, a timer manipulation switch for controlling operation time of the first heating part **400** or the second heating part **600** (see FIG. **3**), and the like. The input part **360** may be provided to be exposed at the front surface of the door front surface part **350**, and the user may directly manipulate the input part **360** to control operation of the cooking appliance.

The first control board **500** is installed inside the door front surface part **350**. Various elements and circuits related to reception of manipulation signals input via the input part **360**, generation of control signals for controlling operations of the first heating part **400** and the second heating part **600**, and the like are provided in the first control board **500**.

The first control board **500** may be electrically connected to the input part **360**, the first heating part **400**, and the second heating part **600**. The first control board **500** is disposed in the door front surface part **350** like the input part **360** and may be disposed at a position very close to the input part **360**. The first control board **500** may be disposed at a position which is also very close to the first heating part **400** disposed on the door **300**.

According to the present embodiment, the input part **360** may be electrically connected to the first control board **500** in the form of being directly mounted on the first control board **500**, and the first heating part **400** may be electrically connected to the input part **360** and the first control board **500** via a cable installed through the inside of the door front surface part **350** and the inside of the door upper surface part **310** which are connected to each other.

That is, since the first control board **500**, the input part **360**, and the first heating part **400** which have to be electrically connected to one another are disposed at positions very close and spatially connected to one another, not only is it possible to easily and promptly perform a task for electrically connecting the first control board **500**, the input part **360**, and the first heating part **400**, but also it is possible to maintain a connection structure thereof in a very stable state.

Also, the cooking appliance of the present embodiment may further include cable mounting parts **340** and **345**. The cable mounting parts **340** and **345** are disposed between the door upper surface part **310** and the door frame **320**, which are disposed in the up-down direction, in such a way that the cable mounting parts **340** and **345** are disposed at both outer sides of the see-through window W.

Further, a connecting member **341** is disposed at each of the front outer side and the rear outer side of the see-through window W. The pair of connecting members **341** connect the pair of cable mounting parts **340** and **345** spaced apart from each other. That is, the pair of cable mounting parts **340** and **345** and the pair of connecting members **341** may be provided in a square shape surrounding the see-through window W from the outside.

An assembly of the cable mounting parts **340** and **345** and the connecting members **341** provided as above is installed in the door upper surface part **310** in the form of being inserted into the space portion formed between the door upper surface part **310** and the door frame **320**.

The inside of the door upper surface part **310** in which the cable mounting parts **340** and **345** are installed as described above is connected to the inside of the door front surface part **350**. Also, cables which connect the first control board **500** and the first heating part **400** through the inside of the door upper surface part **310** and the inside of the door front surface part **350**, which are connected to each other, are installed at the cable mounting parts **340** and **345** installed in the door upper surface part **310**.

A power cable which supplies power to the first heating part **400** and the first control board **500** may be installed at any one of the cable mounting parts **340** and **345** disposed at both outer sides of the see-through window W. Also, a signal cable which transmits a control signal generated in the first control board **500** to the first heating part **400** may be installed at the other one of the cable mounting parts **340** and **345** disposed at both outer sides of the see-through window W.

That is, in the door **300**, the first heating part **400** is disposed at both sides of the see-through window W in the front-rear direction, and the power cable and the signal cable are disposed at both sides of the see-through window W in the left-right direction.

The arrangement structure of the first heating part **400**, the power cable, and the signal cable is a result of designing in consideration of the arrangement structure of the first heating part **400** and the hinge assembly **800**.

According to the present embodiment, each first heating part **400** is disposed in the form in which a heating element thereof extends longitudinally in the left-right direction. Also, the hinge assembly **800** (see FIG. **2**) is disposed at both sides of the see-through window W in the left-right direction.

The power cable and the signal cable are not only connected to the elements disposed in the door **300** such as the first heating part **400** and the first control board **500**, but also connected to the elements disposed in the housing **100** such as the second control board **700** (see FIG. **30**).

In order to pass through a portion between the door **300** and the housing **100** with the least possible exposure to the outside, the power cable and the signal cable may pass through the portion in which the hinge assembly **800** is disposed, which is a connecting portion between the door **300** and the housing **100**.

For example, sections of the power cable and the signal cable connecting the housing **100** and the door **300** to each other may be disposed in the form of passing through the inside of the hinge assembly **800**. In this way, exposure of the power cable and the signal cable to the outside of the cooking appliance may be suppressed in a section between the housing **100** and the door **300**, and the power cable and the signal cable may be protected from the risk of damage.

Further, considering that the heating element of the first heating part **400** extends longitudinally in the left-right direction, the power cable and the signal cable may be disposed at the farthest possible side from the heating element and disposed to extend in a direction different from a direction in which the heating element extends.

This is a result of designing to avoid an influence of heat generated in the first heating part **400** on the power cable and the signal cable. Also, considering that a plurality of first heating parts **400** are disposed to be spaced apart from each other in the front-rear direction, a structure in which the power cable and the signal cable are disposed at both sides of the first heating parts **400** in the left and right direction may be advantageous for connecting the first heating parts **400** using the power cable and the signal cable.

Also, in the present embodiment, the power cable and the signal cable may be disposed to be spaced apart from each other in the left-right direction with the see-through window W disposed therebetween and may be installed at the cable mounting parts **340** and **345** different from each other.

In this case, the power cable passes through the inside of any one of the hinge assemblies **800** disposed at both side surfaces of the housing **100** and is installed at the cable mounting parts **340** and **345** adjacent thereto. Also, the signal cable passes through the inside of the other one of the hinge assemblies **800** disposed at both side surfaces of the housing **100** and is installed at the cable mounting parts **340** and **345** adjacent thereto.

For example, the power cable may pass through the inside of the hinge assembly **800** disposed at the left side of the housing **100** and be installed at the cable mounting parts **340** and **345** disposed at the left side of the door **300**. Also, the signal cable may pass through the inside of the hinge assembly **800** disposed at the right side of the housing **100** and be installed at the cable mounting parts **340** and **345** disposed at the right side of the door **300**.

Through the structure in which the cables having different functions are disposed at different positions, a wiring task for electrically connecting the components constituting the cooking appliance may be more easily and promptly performed, and maintenance and repair tasks related thereto may also be easily performed.

FIG. **10** is a cross-sectional view schematically illustrating a flow of air inside the door according to an embodiment of the present disclosure.

Referring to FIG. **10**, a space portion is formed inside each of the door upper surface part **310** and the door front surface part **350**. Particularly, a space portion is formed between the pair of glasses **330** and **335**, which are disposed to be spaced a predetermined distance apart from each other in the up-down direction, inside the see-through window W installed in the door upper surface part **310**. Also, the space portion inside the door upper surface part **310** including the see-through window W and the space portion inside the door front surface part **350** are connected to each other.

An air intake port **301** is formed at a lower end of the door front surface part **350**. The air intake port **301** is formed to pass through the lower end of the door front surface part **350** and forms a passage which opens the space portion inside the door front surface part **350** to the outside on the door front surface part **350**.

An air exhaust port **303** is formed at a rear end of the door upper surface part **310**. The air exhaust port **303** is formed to pass through the rear end of the door upper surface part **310** and forms a passage which opens the space portion inside the door upper surface part **310** to the outside on the door upper surface part **310**.

Further, the cooking appliance of the present embodiment may further include a first cooling fan **370** disposed inside the door **300**. The first cooling fan **370** may be installed inside the door upper surface part **310** or inside the door front surface part **350**. In the present embodiment, the first cooling fan **370** is illustrated as being installed in the space portion inside the door front surface part **350**. This is a design considering that, since the see-through window W, the first heating part **400**, and the like are installed in the door upper surface part **310**, an available space in the door upper surface part **310** may be limited.

The first cooling fan **370** provided as above generates a flow of air which causes outside air to be introduced into the door **300** via the air intake port **301** and causes air inside the door to be discharged via the air exhaust port **303**.

By the flow of air generated by the first cooling fan **370** as above, the outside air is introduced into the door front surface part **350** via the air intake port **301**, and the outside air introduced into the door front surface part **350** cools the first control board **500**. Also, the air which has cooled the first control board **500** is introduced into the door upper surface part **310**, passes through the space portion inside the see-through window W, and then is discharged to the outside of the door **300** via the air exhaust port **303**.

During operation of the cooking appliance, the temperature of the first control board **500** is at a level significantly lower than the temperature of the see-through window W heated by the first heating part **400**. Therefore, the air which has cooled the first control board **500** after being introduced into the door **300** via the air intake port **301** may pass through the inside of the see-through window W while the temperature of the air is sufficiently low for cooling the see-through window W. Therefore, the cooling of the first control board **500** and the cooling of the see-through window W may be sufficiently efficiently performed by the flow of air generated by the first cooling fan **370**.

By the cooling structure inside the door **300** formed as above, the occurrence of overheating and deterioration of the components inside the door **300** such as the first control board **500** is suppressed. In this way, the occurrence of

breakdown of the cooking appliance, deterioration of performance of the cooking appliance, etc., may be effectively suppressed.

Also, since the cooling air passing through the inside of the door **300** blocks heat transfer between the pair of glasses **330** and **335** constituting the see-through window W and suppresses the occurrence of overheating of the see-through window W, the occurrence of accidents in which the user suffers an injury such as a burn due to coming into contact with the see-through window W may be effectively reduced.

FIG. **11** is a perspective view illustrating a tray according to an embodiment of the present disclosure, and FIG. **12** is a cross-sectional view schematically illustrating a coupling structure between the tray illustrated in FIG. **11** and a mounting protrusion.

Referring to FIGS. **2** and **3** and FIGS. **11** and **12**, the tray **200** is disposed in the cooking compartment **105** formed inside the housing **100**. The tray **200** may be installed to be movable in the front-rear direction by interlocking with an operation of opening or closing the door **300**, and the movement of the tray **200** in the front-rear direction may be guided by the hinge assembly **800**.

The tray **200** may include a tray main body **205** and a mounting part **210**.

The tray main body **205** has a bottom surface formed in a shape corresponding to the bottom surface **110** of the housing **100**. In the present embodiment, the tray main body **205** is illustrated as being formed in the shape of a box which has an open upper portion and is flat in the up-down direction. The bottom surface of the tray main body **205** is formed in a shape corresponding to the bottom surface **110** of the housing **100**, e.g., the shape of a quadrilateral plate, and four side surfaces of the tray **200** are formed in the form of extending in upward from edges of the bottom surface of the tray **200**.

The mounting part **210** is provided at each side surfaces facing both side surfaces of the housing **100** in the left-right direction among the four side surfaces of the tray **200**. The mounting part **210** may include a first protrusion **211** protruding toward the outside of the tray **200** from an upper end portion of the side surface of the tray **200** and a second protrusion **213** extending downward from an outer end portion of the first protrusion **211**. For example, the mounting part **210** may be formed in which the first protrusion **211** and the second protrusion **213** are connected to each other in an L-shape.

The hinge assemblies **800** interlock with the rotation of the door **300** and cause the tray **200** to be withdrawn forward from the inside of the cooking compartment **105** when the door is opened. Also, the hinge assemblies **800** may interlock with the rotation of the door **300** and cause the tray **200** to be inserted inward towards the inside of the cooking compartment **105** when the door is closed. The hinge assemblies **800** may be installed at both sides of the housing **100** in the left-right direction so that the hinge assemblies **800** are disposed at both outer sides of the tray **200** in the left-right direction. Also, each of the hinge assemblies **800** may include a hinge part **810** and a mounting protrusion **820**.

The hinge part **810** is provided to be hinge-coupled to the rear side of the door upper surface part **310**. A state of the hinge part **810** may be changed by the hinge part **810** interlocking with rotation of the door **300**.

The mounting protrusion **820** is connected to one of the connecting members of the hinge part **810** inside the hinge case **830** and protrudes toward the inside of the cooking compartment **105** via the first slot **835** formed in the hinge case **830** and a second slot **125** formed in the housing **100** (see FIG. **3**). Here, the second slot **125** may be formed in a side surface of the housing **100** and formed with a shape overlapping the first slot **835** and at a position overlapping the first slot **835**.

The tray **200** may be mounted on the mounting protrusion **820**. Specifically, the tray **200** may be mounted on the mounting protrusion **820** by the mounting protrusion **820** being fitted to the mounting groove **215** formed in the side portion of the tray **200** (see FIG. **12**).

According to the present embodiment, the mounting groove **215** is formed in the mounting part **210** provided at each side surfaces of the tray **200**. The mounting groove **215** may be formed in which a groove is cut out from the mounting part **210**, more specifically, from the lower end of the second protrusion **213**. The mounting protrusion **820** may be fitted into the mounting groove **215**, and the tray **200** and the mounting protrusion **820** may be fitted and coupled to each other by the mounting groove **215**.

Further, a sliding surface **214** may be formed at the mounting part **210**, more specifically, at the lower end of the second protrusion **213**. The sliding surface **214** is provided to allow sliding of the mounting protrusion **820** coming into contact with the lower end of the second protrusion **213**. The sliding surface **214** may extend in the front-rear direction and be connected to the mounting groove **215**.

The user may perform cooking using the cooking appliance while the tray **200** is installed inside the cooking compartment **105** or take the tray **200** out of the cooking compartment **105** in order to take out the cooked food or wash the tray **200**.

When taking the tray **200** out of the cooking compartment **105**, the tray **200** may be taken out after slightly lifting the tray **200** upward so that the mounting protrusion **820** may disengage with the mounting groove **215**.

Also, when attempting to install the withdrawn tray **200** back into the cooking compartment **105**, the tray **200** may be pushed to the inside of the cooking compartment **105** so that the mounting protrusion **820** is engaged with the mounting groove **215**.

However, since the mounting groove **215** is disposed at the lower portion of the tray **200** and the mounting protrusion **820** is covered by the tray **200**, it is difficult for the user to accurately see the positions of the mounting groove **215** and the mounting protrusion **820**.

In consideration of such an aspect, in the present embodiment, the sliding surface **214** is formed at the lower end of the second protrusion **213** so as to extend in the front-rear direction, and the sliding surface **214** is connected to the mounting groove **215**.

Accordingly, when pushing the tray **200** back into the cooking compartment **105**, the user does not have to accurately fit the mounting protrusion **820** into the mounting groove **215** from the beginning. The user just has to push the tray **200** into the cooking compartment **105** so that the sliding surface **214** is placed on the mounting protrusion **820** and then move the tray **200** in the front-rear direction until the mounting protrusion **820** engages with the mounting groove **215**.

In this process, the mounting protrusion **820** may slide on the sliding surface **214** due to the tray **200** moving in the front-rear direction and then be engaged with the mounting groove **215**.

That is, the mounting protrusion **820** does not have to be accurately fitted to the mounting groove **215** for installing the tray **200** back into the cooking compartment **105**. Simply by placing the tray **200** on the mounting protrusion **820** and then moving the tray **200** in the front-rear direction, the

mounting protrusion **820** and the mounting groove **215** may be fitted and coupled to each other and, in this way, fitting and coupling the mounting protrusion **820** and the tray **200** to each other may be easily and promptly performed.

The above-described structure for fitting and coupling the mounting groove **215** and the mounting protrusion **820** to each other is merely an example, and various other modifications may be possible.

FIG. **13** is a cross-sectional view schematically illustrating another example of the coupling structure between the tray and the mounting protrusion illustrated in FIG. **12**, and FIG. **14** is a view illustrating a coupling process between the tray and the mounting protrusion illustrated in FIG. **13**. Also, FIG. **15** is a cross-sectional view schematically illustrating still another example of the coupling structure between the tray and the mounting protrusion illustrated in FIG. **12**, and FIG. **16** is a view illustrating a coupling process between the tray and the mounting protrusion illustrated in FIG. **15**.

As one of the modifications of the structure for fitting and coupling the mounting groove **215** and the mounting protrusion **820** to each other, as illustrated in FIG. **13**, an inclined surface **215***a* may be formed between the mounting groove **215** and the sliding surface **214**. As illustrated in FIG. **14**, the inclined surface **215***a* may be formed on a path along which the mounting protrusion **820**, which slides while in contact with the sliding surface **214**, inserts into the mounting groove **215** and may guide the movement of the mounting protrusion **820**.

When the inclined surface **215***a* is formed between the mounting groove **215** and the sliding surface **214** as described above, impact and noise that may be generated during the process in which the mounting protrusion **820** is being fitted into the mounting groove **215** may be reduced, and, in this way, fitting and coupling the tray **200** and the mounting protrusion **820** to each other may be more smoothly and stably performed.

The inclined surface **215***a* may be disposed at a rear side of the mounting groove **215**. This is a result of designing in consideration of the fact that, when the user pushes the tray **200** into the cooking compartment **105** in order to install the tray **200** inside the cooking compartment **105**, the tray **200** is often not pushed enough to the position where the mounting groove **215** and the mounting protrusion **820** are fitted and coupled to each other.

When the inclined surface **215***a* is formed at the rear side of the mounting groove **215** as described above, fitting and coupling between the mounting groove **215** and the mounting protrusion **820** may be smoothly and stably guided even when the tray **200** is mounted on the mounting protrusion **820** in a state in which the tray **200** is not pushed enough to position where the mounting groove **215** and the mounting protrusion **820** are fitted and coupled to each other.

As another one of the modifications of the structure for fitting and coupling the mounting groove **215** and the mounting protrusion **820** to each other, as illustrated in FIG. **15**, a fitting groove **215***b* may be further provided in the second protrusion **213**. The fitting groove **215***b* may be formed in which a portion of the second protrusion **213** is cut out. The fitting groove **215***b* may be formed in a groove which is concavely depressed in the front-rear direction. The fitting groove **215***b* may be formed to be connected to the mounting groove **215** in such a way that the fitting groove **215***b* is concavely depressed in the front-rear direction at an upper end of the mounting groove **215**.

The fitting groove **215***b* may be disposed at a front side of the mounting groove **215**. Accordingly, when the mounting protrusion **820** is engaged with the mounting groove **215**, and the user further pushes the tray **200** rearward towards the inside of the cooking compartment **105** as illustrated in FIG. **16**, the mounting protrusion **820** which has engaged with the mounting groove **215** may be engaged with the fitting groove **215***b* extending to the front of the mounting groove **215**.

When the mounting protrusion **820** and the fitting groove **215***b* are fitted and coupled to each other as described above, since movement of the tray **200** in the up-down direction is restricted by the coupling between the mounting protrusion **820** and the fitting groove **215***b*, the risk of the tray **200** toppling forward is significantly lowered.

Meanwhile, the mounting protrusion **820** may be interlocked with a change in the state of the hinge part **810** to move in the front-rear direction. The mounting protrusion **820** may move the tray **200** mounted on the mounting protrusion **820** in the front-rear direction. That is, the tray **200** mounted on the mounting protrusion **820** may be moved in the front-rear direction by interlocking with the movement of the mounting protrusion **820** in the front-rear direction.

FIG. **17** is a perspective view illustrating a door-closed state of the cooking appliance according to an embodiment of the present disclosure, FIG. **18** is a cross-sectional view taken along line "XIII-XIII" of FIG. **17**, and FIG. **19** is a cross-sectional view taken along line "XIX-XIX" of FIG. **17**. Also, FIG. **20** is a perspective view illustrating a door-opened state of the cooking appliance illustrated in FIG. **17**, FIG. **21** is a cross-sectional view taken along line "XXI-XXI" of FIG. **20**, and FIG. **22** is a cross-sectional view taken along line "XXII-XXII" of FIG. **20**.

According to the present embodiment, in a state in which the cooking compartment **105** is closed by the door **300** as illustrated in FIGS. **17** and **18**, the tray **200** is inserted into the cooking compartment **105** (see FIG. **18**). Also, the mounting protrusion **820** on which the tray **200** is mounted is disposed at a position biased towards the rear side of the cooking compartment **105**.

The rear side of the tray **200** may be supported by a pair of mounting protrusions **820**. Also, the front side of the tray **200** may be supported by a pair of support rollers **115**.

That is, the tray **200** may be stably supported by the pair of mounting protrusions **820** disposed at the rear side and the pair of support rollers **115** disposed at the front side and may be installed in the cooking compartment **105** so as to be movable in the front-rear direction.

The support rollers **115** may be disposed at both the side surfaces **120** and **130** of the housing **100** in such a way that the support rollers **115** are disposed at the front side of the housing **100** adjacent to the door **300**. The mounting part **210**, more specifically, the sliding surface **214** (see FIG. **12**), of the tray **200** may be seated on the support roller **115**. The support roller **115** may roll along with the movement of the tray **200** and support the tray **200** so that the tray **200** may move smoothly.

Also, the door **300** may be rotatably installed at the housing **100** via the hinge assemblies **800** and rotate in the up-down direction to open or close the cooking compartment **105**.

The hinge assemblies **800** are disposed at both side portions of the housing **100**, and a rear side of the door upper surface part **310** is rotatably coupled to the hinge assemblies **800**.

That is, a left side corner portion and a right side corner portion at the rear side of the door upper surface part **310** are rotatably coupled to the hinge assemblies **800** disposed at both the side portions of the housing **100**. The door **300**

opens or closes the upper surface and the front surface of the housing **100** by rotating in an up-down direction about the rear side of the door upper surface part **310** rotatably coupled to the hinge assemblies **800**.

Referring to FIGS. **17** to **19**, each of the hinge assemblies **800** may include a hinge case **830**, the hinge part **810**, the mounting protrusion **820**, and a converting and outputting part **840**.

The hinge case **830** forms an exterior of the hinge assembly **800** and houses portions of the hinge part **810** and the mounting protrusion **820** and the converting and outputting part **840** therein. Various structures for supporting the hinge part **810**, the mounting protrusion **820**, and the converting and outputting part **840** may be formed in the hinge case **830**.

The hinge part **810** is installed in the hinge case **830** such that the position of the hinge part **810** is changeable. The hinge part **810** may be installed in the hinge case **830** such that the hinge part **810** may rotate along a trajectory corresponding to a rotational trajectory of the door **300**. An upper end of the hinge part **810** may be coupled to the door **300**. The posture of the hinge part **810** coupled to the door **300** in this way may be changed by the hinge part **810** interlocking with the rotation of the door **300**. Also, the trajectory and range of rotation of the door **300** coupled to the hinge part **810** may be guided by the hinge part **810**.

For example, the hinge part **810** may be provided in the form of a flat plate. The hinge part **810** maybe formed to be curved along the shape corresponding to the rotational trajectory of the door **300**.

Also, a guide hole **831** formed in the shape corresponding to the rotational trajectory of the door **300** may be provided in the hinge case **830**. The guide hole **831** may be formed in the hinge case **830** to pass through the hinge case **830** in the left-right direction. The guide hole **831** formed in this way may provide a passage for guiding a rotation path of the hinge part **810** in the hinge case **830**.

For example, the guide hole **831** may be provided to form a passage which gradually ascends toward the front and gradually descends toward the rear.

A stopper **811** may be provided in the hinge part **810**. The stopper **811** may be provided to protrude from the hinge part **810** so as to protrude in the left-right direction. The stopper **811** may be inserted into the guide hole **831** and move along the passage formed by the guide hole **831**. That is, the stopper **811** may guide the rotation of the hinge part **810** by moving along the guide hole **831**.

Also, at the front and upper end portions of the guide hole **831**, the stopper **811** may interfere with the hinge case **830** which restricts further forward and upward movements of the hinge part **810**. a At the rear and lower end portions of the guide hole **831**, the stopper **811** may interfere with the hinge case **830** which restricts further rearward and downward movements of the hinge part **810**. That is, the hinge part **810** may limit the range of movement of the stopper **811** to a range corresponding to the range in which the guide hole **831** is formed.

The mounting protrusion **820** is connected to any one of the elements constituting the converting and outputting part **840** inside the hinge case **830** and protrudes toward the inside of the cooking compartment **105** via the first slot **835** formed in the hinge case **830** and the second slot **125** formed in the housing **100**. Here, the second slot **125** may be formed in the side surface of the housing **100** and formed with a shape overlapping the first slot **835** and at a position overlapping the first slot **835**.

The converting and outputting part **840** is provided inside the hinge case **830**. The converting and outputting part **840** may convert a rotary force input by a change in the posture of the hinge part **810** to a linear force for moving the mounting protrusion **820** in the front-rear direction. The converting and outputting part **840** may include a moving member and a converting member.

The moving member corresponds to an element which moves the mounting protrusion **820** in the front-rear direction. Also, the converting member corresponds to an element which moves the moving member in the front-rear direction by interlocking with a change in the posture of the hinge part **810**, that is, movement of the hinge part **810**.

For example, the converting and outputting part **840** may include a belt **841**, a plurality of rotary gears **842**, **843**, **844**, and **845**, and a rack gear **846**. Among the elements, the belt **841** and the plurality of rotary gears **842**, **843**, **844**, and **845** are illustrated as corresponding to the converting members. The rack gear **846** is illustrated as corresponding to the moving member.

The belt **841** is provided in the form of an open timing belt in which teeth are formed on at least one of an upper surface and a lower surface. A first guide rib **832** provided to protrude from an inner side surface of the hinge case **830** may restrict a vertical position of the belt **841** and guide a front-rear movement path of the belt **841**.

A rear side end portion of the belt **841** may be connected to the hinge part **810**. The belt **841** may be moved in the front-rear direction by interlocking with a change in the posture of the hinge part **810**. For example, when the hinge part **810** moves forward and upward, the belt **841** may move forward by interlocking with the movement of the hinge part **810**. Also, when the hinge part **810** moves rearward and downward, the belt **841** may move rearward by interlocking with the movement of the hinge part **810**.

The teeth formed at the belt **841** may be engaged with the plurality of rotary gears **842**, **843**, **844**, and **845**.

The first rotary gear **842** is disposed most adjacent to the belt **841** among the plurality of rotary gears **842**, **843**, **844**, and **845**. In the present embodiment, the first rotary gear **842** is illustrated as being formed including a timing gear. The first rotary gear **842** may be engaged with the belt **841** and be rotated by interlocking with the movement of the belt **841**.

The second rotary gear **843** and the third rotary gear **844** are disposed between the first rotary gear **842** and the fourth rotary gear **845** to transmit rotation of the first rotary gear **842** to the fourth rotary gear **845**.

That is, the movement of the belt **841** is performed by interlocking with a change in the posture of the hinge part **810**, and the rotation of the plurality of rotary gears **842**, **843**, **844**, and **845** is performed by interlocking with the movement of the belt **841**. Therefore, a change in the posture of the hinge part **810** causes the rotation of the fourth rotary gear **845**.

The fourth rotary gear **845** rotated as described above may be engaged with the rack gear **846** disposed below the fourth rotary gear **845**. A second guide rib **833** provided to protrude from the inner side surface of the hinge case **830** may restrict a vertical position of the rack gear **846** and guide a front-rear movement path of the rack gear **846**.

The rack gear **846** may be moved in the front-rear direction by interlocking with rotation of the fourth rotary gear **845**. For example, when the hinge part **810** moves forward and upward and the fourth rotary gear **845** is rotated in a first direction according to the movement of the hinge part **810**, the rack gear **846** interlocked therewith may move

forward (see FIG. **22**). Also, when the hinge part **810** moves rearward and downward and the fourth rotary gear **845** is rotated in a second direction, which is the reverse of the first direction, according to the movement of the hinge part **810**, the rack gear **846** interlocked therewith may move rearward (see FIG. **19**).

The mounting protrusion **820** is coupled to the rack gear **846**. Accordingly, the mounting protrusion **820** may interlock with movement of the rack gear **846** and move in the front-rear direction. For example, when the rack gear **846** moves forward, the mounting protrusion **820** may also move forward according to the movement of the rack gear **846**, and, when the rack gear **846** moves rearward, the mounting protrusion **820** may also move rearward according to the movement of the rack gear **846**.

In summary, each of the hinge assemblies **800** having the above-described configuration is provided so that states of the elements constituting each of the hinge assemblies **800**, that is, the hinge part **810** and the converting and outputting part **840**, may be changed by interlocking with the rotation of the door **300** and the elements whose states are changed in this way may move the mounting protrusion **820** in the front-rear direction.

As illustrated in FIGS. **20** to **22**, when the door **300** rotates upward to open the cooking compartment **105**, a rotary force due to the rotation of the door **300** changes the state of the hinge part **810** of the hinge assembly **800**, and the mounting protrusion **820** moves forward as a result. Also, the tray **200** may move forward due to the mounting protrusion **820** moving forward and be withdrawn to the outside of the cooking compartment **105**.

That is, when the door **300** is opened, the tray **200** is automatically withdrawn. Accordingly, the user may easily and safely put food to be cooked on the tray **200** or take out the cooked food on the tray **200** from the tray **200** and may easily take out the tray **200**, which has withdrawn forward, from the inside of the cooking compartment **105** and move the tray **200**.

Furthermore, in the cooking appliance of the present embodiment, the door **300** is provided to be able to open both the front surface and the upper surface of the cooking compartment **105**. Accordingly, the user may insert or withdraw food or the tray **200** into or from the cooking compartment **105** through a much larger opening as compared with a cooking appliance where the door only opens at the front side of the cooking compartment **105**.

That is, the cooking appliance of the present embodiment may not only provide a much larger opening for allowing the user to easily and conveniently insert or withdraw food or the tray **200** into or from the cooking compartment **105** but also provide a function of allowing the food or the tray **200** to be more easily and conveniently withdrawn by the automatic withdrawal of the tray **200** when the door **300** is opened.

The cooking appliance of the present embodiment may also provide a function of allowing the tray **200** to be automatically inserted into the cooking compartment **105** when the door **300** is closed as long as the tray **200** is mounted on the mounting protrusion **820**. The function may contribute to improving convenience and safety of the cooking appliance by eliminating the need for the user to put their hand inside the cooking compartment **105** filled with hot air when the user wants to put the tray **200** back into the cooking compartment **105** after taking out the tray **200** from the cooking compartment **105** while cooking is performed.

Further, according to the cooking appliance of the present embodiment, since the door **300** is opened by rotating upward as opposed to the door being unfolded forward, there is little concern about the center of mass of the cooking appliance being biased towards the front even when the door **300** is opened. Rather, when the door **300** is opened, the center of mass of the door **300** moves further to the rear than when the door **300** is closed.

In the structure in which the center of mass of the cooking appliance moves to the rear when the door **300** is opened, the risk of the cooking appliance toppling forward when the door **300** is opened is significantly lowered. Also, in the structure, the weight of the tray **200** may be freely increased because the risk of the cooking appliance toppling forward is low even when the weight of the tray is increased. That is, in the above structure, it is possible to use the tray **200** which is thicker and heavier than that used in the structure in which the door unfolds forward.

The thicker and heavier the tray **200** is, the better the high-temperature cooking performance and the easier it is to maintain warmth for a long time. Therefore, better cooking performance may be expected to an extent that the tray **200** is thicker and heavier.

Also, the tray **200** usable in an environment heated by the induction heating part generally weighs more than an ordinary tray. Therefore, when it becomes possible to use the tray **200** which is much thicker and heavier than the ordinary tray, even when the second heating part **600** is provided in the form of an induction heating part, it is possible to provide the tray **200** suitable for the second heating part **600**.

As described above, in the cooking appliance of the present embodiment, the tray **200** may be withdrawn forward when the door **300** is opened. Also, the tray **200** may be provided that is thicker and heavier than ordinary trays in order to improve high-temperature cooking performance and warmth maintaining performance.

In a state in which the tray **200** is withdrawn forward, the center of mass of the cooking appliance is biased towards the front as much as the extent to which the tray **200** is withdrawn, and thus a risk of the cooking appliance toppling forward is inevitably increased.

In consideration of such an aspect, the cooking appliance of the present embodiment includes various forms of configurations for preventing the cooking appliance from toppling forward when the door **300** is opened.

Hereinafter, configurations for preventing the cooking appliance from toppling forward when the door **300** is opened will be described in detail.

FIG. **23** is a view illustrating a center-of-mass change state in the door-opened state of the cooking appliance.

Referring to FIGS. **20** to **23**, the hinge part **810** is disposed at both the side surfaces **120** and **130** of the housing **100** in such a way that the hinge part **810** is disposed at sides adjacent to the back surface **140** of the housing **100**. That is, the hinge part **810** is disposed at the rear of both sides of the housing **100**.

The hinge part **810** is coupled to the door **300** in such a way that the hinge part **810** is coupled to the rear side of the door upper surface part **310**. That is, the hinge part **810** is coupled to the rear of each sides of the door upper surface part **310**, and the door **300** may open or close the cooking compartment **105** by rotating in the up-down direction about the rear side of the door upper surface part **310** coupled to the hinge part **810** as described above.

The door **300** may rotate about the rear side of the door upper surface part **310** such that, in a state in which the front surface and the upper surface of the housing **100** are opened (hereinafter referred to as "opened state"), the door **300** is located further behind than in a state in which the front

surface and the upper surface of the housing **100** are closed (hereinafter referred to as "closed state").

By the door **300** rotating about the rear side of the door upper surface part **310** as described above, the position of the door **300** may be further biased towards the rear in the opened state than in the closed state.

The door **300** whose position is relatively further biased towards the rear in the opened state as described above may cause the center of mass of the cooking device to be biased towards the rear from the center of the cooking appliance in the front-rear direction when the door **300** is in the opened state.

That is, the first configuration provided for preventing the cooking appliance from toppling forward when the door **300** is opened is allowing the door **300** to rotate about the rear side of the door upper surface part **310**. Accordingly, the position of the door **300** may be further biased towards the rear in the opened state than in the closed state, and, in this way, the center of mass of the cooking appliance may be formed to be biased towards the rear from the center of the cooking appliance in the front-rear direction when the door **300** is in the opened state.

Meanwhile, when looking at the configuration of the door **300** itself, the door **300** is provided in which the up-down length of the door front surface part **350** is shorter than the front-rear length of the door upper surface part **310**. That is, when the door **300** is in the closed state, the up-down length of the door front surface part **350** is shorter than the front-rear length of the door upper surface part **310**.

Accordingly, in the door **300**, the proportion occupied by the volume of the door upper surface part **310** is larger than the proportion occupied by the volume of the door front surface part **350**. Accordingly, in the total weight of the door **300**, the proportion occupied by the weight of the door upper surface part **310** is larger than the proportion occupied by the weight of the door front surface part **350**.

When the door **300** is rotated rearward to be opened, the center of mass of the door **300** gradually moves rearward. In the door **300**, the door front surface part **350** is disposed at the front side, and the door upper surface part **310** is disposed behind the door front surface part **350**.

Accordingly, the larger the proportion occupied by the weight of the door upper surface part **310** with respect to the total weight of the door **300**, the greater the extent to which the center of mass of the door **300** moves rearward when the door **300** rotates rearward.

In other words, the greater the proportion occupied by the weight of the door upper surface part **310** with respect to the total weight of the door **300**, the easier it is for the center of mass of the door **300** to promptly move rearward when the door **300** rotates rearward.

That is, the second configuration provided for preventing the cooking appliance from toppling forward when the door **300** is opened is providing the door **300** in which the up-down length of the door front surface part **350** is shorter than the front-rear length of the door upper surface part **310**. Accordingly, when the door **300** rotates rearward, the center of mass of the door **300**, and thus the center of mass of the cooking appliance may move further rearward more promptly.

Meanwhile, the first heating part **400** and the see-through window W are provided in the door **300**, and the first heating part **400** and the see-through window W are disposed in the door upper surface part **310**.

As described above, the see-through window W may include the pair of glasses **330** and **335** (see FIG. **10**). Generally, glasses are formed of a heavyweight material. Therefore, when the see-through window W formed of glass is disposed in the door upper surface part **310**, the weight of the door upper surface part **310** is inevitably increased as much as the weight of the see-through window W.

Furthermore, the see-through window W of the present embodiment may include the pair of glasses **330** and **335**, i.e., two layers of glasses. Therefore, the weight of the door upper surface part **310** is inevitably increased as much as the weight of the see-through window W.

Since the see-through window W is disposed in the door upper surface part **310** as described above, the proportion occupied by the weight of the door upper surface part **310** with respect to the total weight of the door **300** is increased as much as the weight of the glasses forming the see-through window W.

Accordingly, when the door **300** rotates rearward, the center of mass of the door **300**, and thus the center of mass of the cooking appliance may more promptly move further rearward as much as the increase in the weight of the door upper surface part **310** due to the see-through window W.

Further, the pair of first heating parts **400** are disposed at the bottom surface side of the door upper surface part **310**. In this case, the first heating part **400** is disposed at each of the front outer side and the rear outer side of the see-through window W. One of the pair of first heating parts **400** is disposed at the rear side of the door upper surface part **310** adjacent to the hinge part **810**.

Since the first heating part **400** is disposed in the door upper surface part **310** as described above, the proportion occupied by the weight of the door upper surface part **310** with respect to the total weight of the door **300** is further increased as much as the weight of the first heating part **400**.

Accordingly, when the door **300** rotates rearward, the center of mass of the door **300**, and thus the center of mass of the cooking appliance may more promptly move further rearward as much as the increase in the weight of the door upper surface part **310** due to the first heating part **400**.

Furthermore, due to the first heating part **400** disposed at the rear side of the door upper surface part **310** adjacent to the hinge part **810**, the center of mass of the door **300** may move further rearward. In this way, when the door **300** rotates rearward, the center of mass of the door **300**, and thus the center of mass of the cooking appliance may more promptly move further rearward.

That is, the third configuration provided for preventing the cooking appliance from toppling forward when the door **300** is opened is placing the first heating part **400** and the see-through window W in the door upper surface part **310**. Accordingly, when the door **300** rotates rearward, the center of mass of the door **300** may more promptly move further rearward.

In summary, the door **300** of the present embodiment is provided in which the position of the door **300** moves rearward when the door **300** rotates rearward, the up-down length of the door front surface part **350** is shorter than the front-rear length of the door upper surface part **310**, and the first heating part **400** and the see-through window W are disposed in the door upper surface part **310**.

The door **300** is provided so that, when the cooking compartment **105** is opened and the tray **200** is withdrawn forward as a result, the door **300** itself is moved toward the rear of the cooking appliance, and the center of mass of the door **300** promptly moves rearward according to the rearward rotation of the door **300**.

Since the door **300** provided as described above causes the center of mass of the cooking appliance to be biased towards the rear from the center in the front-rear direction

when the cooking compartment **105** is opened and the tray **200** is withdrawn forward as a result, the door **300** may contribute to significantly lowering the risk of the occurrence of the cooking appliance toppling forward.

Meanwhile, the door **300** rotates about the rear side of the door upper surface part **310** coupled to the hinge part **810**. When the door **300** is in the opened state, most of the load of the door **300** acts toward the hinge part **810**.

Since the hinge part **810** is disposed at the rear side of the cooking appliance, when the door **300** is in the opened state, most of the load of the door **300** is concentrated on the rear side of the cooking appliance.

Therefore, when the door **300** is in the opened state, the center of mass of the cooking appliance moves towards the rear side of the cooking appliance to the extent that most of the load of the door **300** is concentrated on the rear side of the cooking appliance.

In other words, when the door **300** is in the opened state, in addition to the influence of the change in the position of the door **300** itself and the change in the center of mass of the door **300** itself, an additional influence is caused by most of the load of the door **300** being concentrated on the rear side of the cooking appliance. In this way, the center of mass of the cooking appliance may be further biased towards the rear side.

That is, the fourth configuration provided for preventing the cooking appliance from toppling forward when the door **300** is opened is a configuration in which a coupling point between the door **300** and the hinge part **810** is disposed at the rear side of the cooking appliance so that an additional influence is caused by most of the load of the door **300** being concentrated on the rear side of the cooking appliance.

Also, when the door **300** is in the opened state, moment is applied to the cooking appliance around a portion where the door **300** and the hinge part **810** are coupled to each other. The moment acts as a force rotating the cooking appliance forward. That is, as the moment becomes greater, the force attempting to rotate the cooking appliance forward becomes larger, and the risk of the cooking appliance toppling forward is also increased.

Further, when the door **300** is in the opened state, the tray **200** is withdrawn forward, and moment acting from the tray **200** withdrawn in this way is applied to the cooking appliance. The moment also acts as the force rotating the cooking appliance forward.

Accordingly, the force equivalent to the sum of the moment acting from the door **300** and the moment acting from the tray **200** may act as a force further increasing the risk of the cooking appliance toppling forward.

The size of the moment acting from the door **300** may be determined by a force acting on the door **300** and a distance between a position on which the force acts and a rotation shaft (portion where the door and the hinge part are coupled to each other). In this case, only gravity acts on the door **300** unless a separate force is applied thereto. Since gravity acts on the entire part of the door **300**, it can be seen that gravity acts on the center of mass of the door **300**. Therefore, the moment increases as the center of mass of the door **300** moves away from the portion where the door **300** and the hinge part **810** are coupled to each other and decreases as the center of mass of the door **300** approaches the portion where the door **300** and the hinge part **810** are coupled to each other.

According to the present embodiment, as the door **300** rotates rearward to open the cooking compartment **105**, the center of mass of the door **300** also moves rearward, and, as a result, the size of the moment acting from the door **300** may be decreased together.

That is, when the door **300** is in the opened state, the moment acting from the tray **200** may increase due to the tray **200** being withdrawn forward, but the moment acting from the door **300** may relatively decrease.

In this way, since the cooking appliance of the present embodiment allows the size of the moment acting on the cooking appliance due to the door **300** to be decreased, the risk of the cooking appliance toppling forward due to the tray **200** withdrawn forward may be significantly lowered.

That is, the fifth configuration provided for preventing the cooking appliance from toppling forward when the door **300** is opened is a configuration in which the center of mass of the door **300** is allowed to be more biased towards the rear so that the size of the moment acting on the cooking appliance due to the door **300** is decreased.

Meanwhile, the mounting protrusion **820** may protrude towards the inside of the cooking compartment **105** via the first slot **835** formed in the hinge case **830** and the second slot **125** formed in the housing **100**.

The first slot **835** and the second slot **125** may provide a passage for allowing the mounting protrusion **820**, which is connected to the converting and outputting part **840** inside the hinge case **830**, to protrude towards the inside of the cooking compartment **105** and provide a passage required for the mounting protrusion **820** to move in the front-rear direction.

To this end, the first slot **835** and the second slot **125** may be formed to pass through the hinge case **830** and the side surface **120** of the housing **100**, respectively, and each of the first slot **835** and the second slot **125** may be formed as a slot having an up-down width corresponding to the thickness of the mounting protrusion **820** and a length extending in the front-rear direction.

Preferably, the front-rear lengths of the first slot **835** and the second slot **125** may be less than ½ of the front-rear length of the tray **200**.

The lengths of the first slot **835** and the second slot **125** are related to a withdrawal range of the tray **200**. That is, the tray **200** may be withdrawn as the mounting protrusion **820** moves forward. Since a forward movement range of the mounting protrusion **820** is limited by the first slot **835** and the second slot **125**, the withdrawal range of the tray **200** may be determined by the first slot **835** and the second slot **125**.

Therefore, when the front-rear lengths of the first slot **835** and the second slot **125** are less than ½ of the front-rear length of the tray **200**, a distance along which the tray **200** is movable is limited to less than ½ of the front-rear length of the tray **200**.

Accordingly, when it is assumed that the tray **200** is completely inserted into the cooking compartment **105** when the mounting protrusion **820** is disposed at the rearmost end portions of the first slot **835** and the second slot **125**, in a case in which the mounting protrusion **820** is disposed at the foremost end portions of the first slot **835** and the second slot **125**, the tray **200** may be withdrawn to the outside of the cooking compartment **105** only as much as a length less than ½ of the longitudinal length of the tray **200**.

This is a result of designing so that the center of mass of the tray **200** is located inside the cooking compartment **105** even when the tray **200** is withdrawn. That is, in consideration of the fact that, when the tray **200** is excessively withdrawn, the risk of the tray **200** toppling forward increases to the extent that the tray **200** is excessively

withdrawn. Thus, the center of mass of the tray **200** is allowed to be located inside the cooking compartment **105** even when the tray **200** is withdrawn. Also, when the tray **200** is excessively withdrawn and the center of mass of the cooking appliance is biased to the front, the size of the moment acting on the cooking appliance increases to the extent that the center of mass of the cooking appliance is biased to the front, and, as a result, the risk of the cooking appliance itself toppling forward also increases.

In consideration of such aspect, in the present embodiment, the tray **200** is allowed to be withdrawn to the outside of the cooking compartment **105** only as much as a length less than ½ of the longitudinal length of the tray **200**. In this way, since the tray **200** is automatically withdrawn when the door **300** is opened, advantageous effects in that withdrawal of food or the tray **200** is more easily and conveniently performed and the risk of the tray **200** and the cooking appliance toppling forward is lowered.

In the case of a conventional cooking appliance in which the door only opens the front of a cooking compartment, when, as described above, the tray **200** is withdrawn to the outside of the cooking compartment **105** only as much as the length less than ½ of the longitudinal length of the tray **200**, various inconveniences may occur.

That is, since the tray **200** is not completely exposed to the outside of the cooking compartment, it is difficult to properly check the cooking state of food placed on the tray **200**, and there is an inconvenience in placing food on the tray **200** or taking out the food placed on the tray **200**.

In contrast, in the cooking appliance of the present embodiment, since the upper surface of the cooking compartment **105** as well as the front surface thereof are opened together when the door **300** is opened, the entire tray **200** may be exposed to the outside even when, as described above, the tray **200** is withdrawn to the outside of the cooking compartment **105** only as much as the length less than ½ of the longitudinal length of the tray **200**.

Therefore, even when the tray **200** is withdrawn to the outside of the cooking compartment **105** only as much as the length less than ½ of the longitudinal length of the tray **200**, it is easy to check the cooking state of the entire food placed on the tray **200**, and placing food on the tray **200** or taking out the food placed on the tray **200** may be easily and promptly performed.

That is, the sixth configuration provided for preventing the cooking appliance from toppling forward when the door **300** is opened is a configuration in which the tray **200** is allowed to be withdrawn to the outside of the cooking compartment **105** only as much as the length less than ½ of the longitudinal length of the tray **200** so that the tray **200** may be exposed to the outside while the risk of the occurrence of the cooking appliance toppling forward is lowered.

FIG. **24** is an exploded perspective view of the tray illustrated in FIG. **11**, and FIG. **25** is a cross-sectional view taken along line "XXV-XXV" of FIG. **11**.

Referring to FIG. **3** and FIGS. **24** and **25**, a water receiving groove **220** may be formed in the tray **200**. The water receiving groove **220** may be disposed in at least one of the four side surfaces of the tray **200**. In the present embodiment, the water receiving groove **220** is illustrated as being disposed in the side surface disposed at the front of the tray main body **205**. The water receiving groove **220** may be formed in the form of a groove which is concavely depressed downward from an upper end of the side surface of the tray **200**.

Water may be held in the water receiving groove **220**, and the water held in the water receiving groove **220** may be evaporated when the inside of the cooking compartment **105** or the tray **200** is heated and then be provided as steam acting in the cooking compartment **105**.

Further, the tray **200** may further include a steam cover **230**. The steam cover **230** may be provided as an element which covers the water receiving groove **220** from the top and may include a cover main body part **231** and a water entrance guide surface **235**.

The cover main body part **231** may cover the water receiving groove **220** from the top and be detachably coupled to the tray **200**. A plurality of steam holes **233** may be disposed in the cover main body part **231**. Each steam hole **233** is formed in the cover main body part **231** to pass through the cover main body part **231** in the up-down direction. By having each steam hole **233** formed in this way, a passage connecting the cooking compartment **105** and the inside of the water receiving groove **220** covered by the steam cover **230** may be formed in the steam cover **230**.

According to the present embodiment, the water receiving groove **220** and the steam cover **230** are disposed in front of the tray **200** and extend in the left-right direction. Also, the plurality of steam holes **233** are disposed in the cover main body part **231** of the steam cover **230** in such a way that the plurality of steam holes **233** are arranged to be spaced a predetermined distance apart from each other in the left-right direction. That is, the steam holes **233** are provided to be evenly disposed inside the cooking compartment **105** in the left-right direction.

Also, the water entrance guide surface **235** is formed on the cover main body part **231** so as to be concave in the up-down direction. A water entrance hole **237** is formed in the water entrance guide surface **235** to pass through the water entrance guide surface **235** in the up-down direction.

The water entrance hole **237** forms a passage connecting the water receiving groove **220** and an upper surface of the steam cover **230** to each other in the steam cover **230**. Also, the water entrance guide surface **235** guides the flow of water so that the flow of water supplied through the upper surface of the steam cover **230** is guided toward the water entrance hole **237**.

Preferably, the water entrance hole **237** may be disposed at a central side of the water entrance guide surface **235** in the left-right direction, and the water entrance guide surface **235** may be inclined to connect the cover main body part **231** and the water entrance hole **237** to each other. Accordingly, water supplied to the water entrance guide surface **235** may flow towards the water entrance hole **237** guided by the inclined surface formed by the water entrance guide surface **235** and then be supplied into the water receiving groove **220** through the water entrance hole **237**.

The water supplied into the water receiving groove **220** as described above may be used as water for generating steam to be supplied in the cooking appliance.

For example, when operation of the cooking appliance begins in a state in which water is housed in the water receiving groove **220** and the tray **200** is inserted into the cooking compartment **105**, heating of the tray **200** is performed by operation of at least one of the first heating part **400** and the second heating part **600**.

When the tray **200** is heated in this way, the water housed in the water receiving groove **220** is heated and steam is generated. The steam generated inside the water receiving groove **220** may pass through the steam cover **230** through the steam holes **233** and be introduced into the cooking compartment **105**. In this case, since the water receiving groove **220** is formed to extend in the left-right direction, and the plurality of steam holes **233** are evenly disposed

inside the cooking compartment **105** in the left-right direction, steam may be evenly spread inside the cooking compartment **105**. The steam may also be discharged through the water entrance hole **237** disposed at the center of the steam cover **230**.

Since the steam is evenly spread inside the cooking compartment **105** as described above instead of being concentrated on any one portion of the cooking compartment **105**, the steam may be evenly supplied to the entire food which is an object to be cooked. In this way, the cooking appliance of the present embodiment may provide a cooking function which allows moisture to be effectively maintained in the food by the steam evenly supplied to the inside of the cooking compartment **105**.

Also, since the steam cover **230** is provided to be separable from the tray **200**, the inside of the water receiving groove **220** may be easily washed, and, when necessary, only the steam cover **230** may be replaced easily and promptly. Therefore, it is possible to provide a cooking appliance which facilitates hygiene care, and maintenance and repair.

FIG. **26** is an exploded perspective view separately illustrating a housing and a second heating part according to an embodiment of the present disclosure, and FIG. **27** is a plan view illustrating the second heating part illustrated in FIG. **26**. FIG. **28** is an exploded perspective view separately illustrating the second heating part illustrated in FIG. **26**, a receiver coil, and an electromagnetic shielding plate. FIG. **29** is a cross-sectional view illustrating a coupled state among the second heating part illustrated in FIG. **26**, a temperature sensor, a receiving coil, and the electromagnetic shielding plate. FIG. **30** is a rear view illustrating a second control board illustrated in FIG. **26**.

Referring to FIG. **3** and FIGS. **26** and **27**, the second heating part **600** is disposed at the lower portion of the tray **200**. The second heating part **600** is installed at the lower portion of the bottom surface **110** of the housing **100** and is provided in the form of a heating part which heats the tray **200** using a heating method different from that of the first heating part **400**, e.g., an induction heating part. The induction heating part may a working coil **610** installed at the lower portion of the bottom surface **110** of the housing **100** and may induce heating of the tray **200** from the lower portion of the tray **200**.

The working coil **610** includes a coil installation base **611**. In the present embodiment, the coil installation base **611** is illustrated as being formed in a quadrilateral shape similar to the shape of the tray **200**. This is a result of designing the size and shape of the working coil **610** to be similar to those of the tray **200** so that the entire region of the tray **200** may be heated by the working coil **610**.

As illustrated in FIGS. **28** and **29**, the coil installation base **611** has a spiral groove, in which a coil **613** may be installed. The coil **613** is housed in the spiral groove and fixed by being densely wound at an upper portion of the coil installation base **611**. A coil connection wiring **615** connected to a coil control printed circuit board (PCB) for controlling the coil **613** is provided at an end portion of the coil **613**.

Further, the second heating part **600** may further include a receiver coil **620**. The receiver coil **620** is an element provided to receive wirelessly-transmitted power and is disposed at a lower portion of the second heating part **600**. Also, a base **180** is disposed at a lower portion of the receiver coil **620**. The base **180** is coupled to the lower portion of the bottom surface **110** of the housing **100** and supports the working coil **610**, the receiver coil **620**, and the like from the lower portion of the receiver coil **620** while forming an exterior of the bottom surface of the cooking appliance.

Like the working coil **610**, the receiver coil **620** may include a coil installation base **621** and a coil **623**. Unlike the coil installation base **611** of the working coil **610**, the coil installation base **621** of the receiver coil **620** is formed in a substantially circular shape. This is a result of designing the shape of the receiver coil **620** to be similar to the shape of a working coil of an induction heating part provided at a cooktop.

According to the present embodiment, the receiver coil **620** is provided to be able to receive power from an induction heating part of another cooking appliance that is separately provided from the cooking appliance of the present embodiment.

For example, the cooking appliance of the present embodiment may be used while being placed on a cooktop. In this case, power required for operation of the cooking appliance may be received from an induction heating part of the cooktop.

For example, when the working coil of the cooktop and the cooking appliance of the present embodiment are operated together while the cooking appliance of the present embodiment is placed on the cooktop, power supplied through the cooktop may be transmitted to the receiver coil **620**.

In this case, a current is induced towards the receiver coil **620** through a magnetic field which changes in the working coil of the cooktop due to magnetic induction phenomenon. In this way, power supplied through the cooktop may be transmitted to the receiver coil **620**. In this process, in order to improve power reception efficiency of the receiver coil **620**, the cooking appliance of the present embodiment may be placed on the cooktop such that the position of the receiver coil **620** overlaps with the position of the working coil provided in the induction heating part of the cooktop in the up-down direction.

Further, the induction heating part may further include an electromagnetic shielding plate **630** disposed between the working coil **610** and the receiver coil **620**. The electromagnetic shielding plate **630** may be provided in the form of a metal plate. The electromagnetic shielding plate **630** is disposed between the working coil **610** and the receiver coil **620** and serves to minimize an influence of electromagnetic interference (EMI) due to the working coil **610** on the receiver coil **620** or an influence of EMI due to the receiver coil **620** on the working coil **610**.

The cooking appliance of the present embodiment including the receiver coil **620** may be operated by wirelessly receiving power from the induction heating part of the cooktop. Since the cooking appliance does not require untidy power cables, the cooking appliance may be provided with a simple and neat exterior, and may be operated by wirelessly receiving power just by being placed on the cooktop, and thus the user's satisfaction may be further improved.

As illustrated in FIGS. **26**, **27**, and **30**, the receiver coil **620** is electrically connected to the second control board **700** disposed behind the working coil **610** and the receiver coil **620**. The power wirelessly transmitted from the working coil of the cooktop to the receiver coil **620** is transmitted to the second control board **700** electrically connected to the receiver coil **620**.

According to the present embodiment, the inner space at the lower portion of the bottom surface **110** of the housing **100** and the inner space at the rear of the back surface **140**

of the housing **100** are connected to each other. The working coil **610** of the induction heating part disposed at the lower portion of the bottom surface **110** of the housing **100** and the second control board **700** disposed at the rear of the back surface **140** of the housing **100** may be electrically connected to each other by a cable. The cable connects the working coil **610** and the second control board **700** through the inner space at the lower portion of the bottom surface **110** of the housing **100** and the inner space at the rear of the back surface **140** of the housing **100** which are connected to each other.

A power processing part provided at the second control board **700** supplies power required for operation of the induction heating part and the like of the second heating part **600**. The power processing part is connected to the receiver coil **620** and receives power from the receiver coil **620** and processes the received power to a form suitable for use in the second heating part **600** and the like. The power processing part may include a noise filter PCB **710**, and a coil control PCB **720** for controlling operation of the working coil **610** may be provided at the second control board **700**.

The noise filter PCB **710** serves to remove noise from power to be supplied to the working coil **610**, and the coil control PCB **720** controls the operation of the working coil **610**. A chip for controlling the operation of the working coil **610**, e.g., an insulated gate bipolar transistor (IGBT) chip **725**, may be mounted on the coil control PCB **720**.

The IGBT chip **725** is a kind of high heat generation chip that may require temperature management. When the IGBT chip **725** is overheated to a predetermined temperature or more, the IGBT chip **725** is unable to control the working coil **610**.

In consideration of such aspect, a second cooling fan **730** is installed at the second control board **700**. The second cooling fan **730** may be a sirocco fan which sucks air from an outside environment of the housing **100** and discharges the air toward the IGBT chip **725**.

The second cooling fan **730** may be disposed at the side of the IGBT chip **725** and may suck air from the rear side of the housing **100** and discharge the air sideward toward the IGBT chip **725**.

The air introduced into the space portion at the rear of the back surface of the housing **100** through the second cooling fan **730** may first come into contact with the IGBT chip **725** and a heat sink **726** for cooling the IGBT chip **725**, cool the IGBT chip **725** and the heat sink **726**, cool a portion of the noise filter PCB **710**, and then be discharged to the outside environment.

Meanwhile, as illustrated in FIGS. **26** to **29**, the second heating part **600** of the present embodiment may further include a temperature measurement module **640**. The temperature measurement module **640** is provided to measure a temperature of the tray or a temperature of the inside of the cooking compartment **105** in which the tray is disposed.

The temperature measurement module **640** may be disposed at the center of the working coil **610**. Specifically, the temperature measurement module **640** may be disposed at a portion where the coil **613** is not disposed on the coil installation base **611**, e.g., a central portion of the coil installation base **611**.

The temperature measurement module **640** may be fitted and coupled to the working coil **610** via a through-hole formed in the central portion of the coil installation base **611**. Also, the temperature measurement module **640** installed in this way may include a temperature sensor such as a thermistor and may be disposed at the lower portion of the bottom surface **110** of the housing **100** and measure the temperature of the tray or the temperature of the inside of the cooking compartment **105** in which the tray is disposed.

Referring to FIG. **3** and FIGS. **26** to **30**, the hinge assemblies **800**, the second heating part **600**, and the second control board **700** are disposed in the housing **100**.

The cooking compartment **105** may be formed inside the housing **100**, and the tray **200** may be installed in the cooking compartment so as to be withdrawable therefrom. The second heating part **600** for heating the tray **200** is disposed at the lower portion of the housing **100**. Also, the hinge assembly **800** which rotatably supports the door **300** is disposed at each side portions of the housing **100**.

The hinge assemblies **800** are disposed at both side portions of the housing **100** in order to stably support the door **300** from both sides of the door **300**. Also, the hinge assemblies **800** interlock with rotation of the door **300** and causes the tray **200** to be withdrawn or inserted. To allow the hinge assemblies **800** to be coupled to the tray **200** so that the hinge assemblies **800** may move the tray **200** in the front-rear direction, the hinge assemblies **800** are disposed at both side portions of the housing **100**.

That is, the hinge assemblies **800** is disposed at both side portions of the housing **100** for the hinge assemblies **800** to be coupled to the tray **200** so that the hinge assemblies **800** may stably support the door **300** and move the tray **200** in the front-rear direction.

Further, since the upper surface and the front surface of the housing **100** are open and the second heating part **600** is installed at the lower portion of the housing **100**, the hinge assemblies **800** are inevitably disposed at the rear or both side portions of the housing **100**. Due to the above-described reasons, in many ways, it is advantageous for the hinge assemblies **800** to be disposed at both side portions of the housing **100**.

The receiver coil **620** is disposed at the lower portion of the housing **100**, more specifically, at the lower portion of the second heating part **600**. Since the receiver coil **620** is disposed at a position most adjacent to a target of wireless power transmission, e.g., the working coil of the cooktop, the receiver coil **620** may be disposed at the lower portion of the housing **100**.

When the receiver coil **620** is disposed at the lower portion of the housing **100** together with the working coil **610** of the second heating part **600** as described above, the EMI of the working coil **610** or the receiver coil **620** may affect each other. In consideration of such an aspect, the electromagnetic shielding plate **630** may be disposed between the working coil **610** and the receiver coil **620**.

Since the second control board **700** is an element closely related to power reception through the receiver coil **620** and the operation of the working coil **610**, the second control board **700** may be disposed at a position adjacent to the receiver coil **620** and the working coil **610**.

Since the second heating part **600** and the receiver coil **620** are disposed at the lower portion of the housing **100**, and the hinge assemblies **800** are disposed at both side portions of the housing **100**, the rear of the housing **100** may be the most suitable position for arrangement of the second control board **700**.

In consideration of such aspect, the second control board **700** may be installed in a space at the rear of the back surface **140** of the housing **100**. The second control board **700** installed in this way may be disposed at a position very close to the working coil **610** and the receiver coil **620**. Accordingly, wires for connecting the second control board **700**, the working coil **610**, and the receiver coil **620** may be simply configured.

Also, the position of the second control board **700** disposed at the rear of the housing **100** as described above is also close to the hinge assemblies **800**. Accordingly, when configuring wires for connecting the second control board **700** and the elements disposed in the door **300**, the wires may be easily concealed inside the hinge assemblies **800**. There is an advantage in that it is possible to configure the wires in a neat and simple manner such that the wires are not easily exposed to the outside.

As described above, the second heating part **600** and the receiver coil **620**, the hinge assemblies **800**, and the second control board **700** are disposed at the lower portion of the housing **100**, both side portions of the housing **100**, and the rear of the housing **100**, respectively. The elements are those suitable to be disposed in the housing **100** and are disposed at optimal positions that allow the elements to function optimally, have high structural stability, have neat and simple wiring configurations, and efficiently avoid interference therebetween.

Meanwhile, referring to FIGS. **5** and **9**, the see-through window W, the first heating part **400**, the input part **360**, and the first control board **500** are disposed in the door **300**. The elements are those more suitable to be disposed in the door **300** than in the housing **100** due to functions thereof. Also in consideration of an aspect that various other elements are already disposed in the housing **100** and thus it is difficult for other elements to be disposed in the housing **100**, the see-through window W, the first heating part **400**, the input part **360**, and the first control board **500** are more suitable to be disposed in the door **300** than in the housing **100**.

The see-through window W is disposed at the upper portion of the cooking appliance. In consideration of a characteristic of the cooking appliance provided in the form of a mini oven in that the cooking appliance is generally used at a position lower than a user's gaze, the see-through window W may be disposed at the upper portion of the cooking appliance rather than being disposed at the front of the cooking appliance.

The see-through window W is disposed at the upper surface of the door **300**, more specifically, at the door upper surface part **310**. In this case, the larger the size of the see-through window W, the more advantageous it is for securing the field of view for the inside of the cooking compartment **105**. However, the size of the see-through window W may be set to a size that allows a space required for installation of the first heating part **400** and the cable mounting parts **340** and **345** to be secured in the door upper surface part **310**.

Like the see-through window W, the first heating part **400** is disposed in the door upper surface part **310**. This is a result of designing the first heating part **400** to be disposed at an upper portion facing the second heating part **600** with the tray **200** disposed therebetween. That is, the first heating part **400** is disposed on the door upper surface part **310** so as to be disposed higher than the tray **200**.

The first heating part **400** installed in the door upper surface part **310** together with the see-through window W as described above may be disposed at a position at which the first heating part **400** is not exposed through the see-through window W when viewed from the top. When the first heating part **400** is disposed in a region exposed through the see-through window W, it is aesthetically not pleasing, a problem may occur in securing the field of view through the see-through window W, and a problem that the temperature of a portion of the see-through window W rises may also occur.

Also, in consideration of the shape of the door front surface part **350** having a rectangular shape in which a front-rear length is longer than a left-right length, the first heating part **400** may be disposed at the front outer side and the rear outer side of the see-through window W so that a length of the first heating part **400** may be increased accordingly, and improvement in thermal power of the first heating part **400** may be expected as much as the increase in the length of the first heating part **400**.

In consideration of such aspects, the first heating part **400** is disposed at each of the front outer side and the rear outer side of the see-through window W. In this way, it may be advantageous to secure functional advantages such as maintaining aesthetics, maintaining a secured field of view, suppressing a temperature rise of the see-through window W, and improving thermal power of the first heating part **400**.

Since the see-through window W and the first heating part **400** are disposed in the door upper surface part **310** as described above, most of the region of the door upper surface part **310** is occupied by the see-through window W and the first heating part **400**. Also, the input part **360** and the first control board **500** are disposed in the door front surface part **350** instead of the door upper surface part **310**.

In consideration of the state in which most of the region of the door upper surface part **310** is occupied by the see-through window W and the first heating part **400**, it is not easy to secure a space for installing the input part **360** in the door upper surface part **310**. Also, when the input part **360** is disposed in the door upper surface part **310**, in the process of opening the door **300**, a collision may occur between the input part **360** and an obstacle disposed at the upper portion of the cooking appliance, and there is a risk of damage of the input part **360**. Particularly, when the input part **360** is provided in the form protruding from the door **300**, the risk is even greater.

Also, the door upper surface part **310** in which the first heating part **400** is disposed is likely to have a higher temperature than the door front surface part **350**. Considering that the input part **360** is an element held by the user's hand and manipulated, when the input part **360** is disposed in the door upper surface part **310**, the possibility that the user will come into contact with a hot portion of the door upper surface part **310** in the process of manipulating the input part **360** may be increased. That is, when the input part **360** is disposed in the door upper surface part **310**, a risk that the user will suffer an injury such as a burn in the process of manipulating the input part **360** may be increased.

In consideration of such aspect, the input part **360** is disposed in the door front surface part **350** instead of the door upper surface part **310**. Since the input part **360** is disposed in the door front surface part **350**, the user may safely and conveniently control the operation of the cooking appliance from the front of the cooking appliance.

In addition to the input part **360**, the first control board **500** is also disposed in the door front surface part **350**. Various elements and circuits related to reception of manipulation signals input via the input part **360**, generation of control signals for controlling operations of the first heating part **400** and the second heating part **600**, and the like may be provided in the first control board **500**. Therefore, in particular, the first control board **500** may be electrically connected to the input part **360**.

According to the present embodiment, like the input part **360**, the first control board **500** is installed in the door front surface part **350** and disposed at a position very close to the input part **360**. Therefore, connection between the input part

360 and the first control board 500 may be configured in the form in which the input part 360 is directly connected to the first control board 500, and, accordingly, a very simple and stable connection structure may be provided for the input part 360 and the first control board 500.

Also, since the first control board 500 is installed in the door front surface part 350 instead of the door upper surface part 310 in which the first heating part 400, which is a heat generating component, is disposed, the first control board 500 may be disposed at a position deviated, to some extent, from an influence of heat generated by the first heating part 400. In this way, since an influence of heat, which is generated during operation of the first heating part 400, on the first control board 500 may be reduced accordingly, and the stability and operational reliability of the cooking appliance may be further improved.

FIG. 31 is an exploded perspective view illustrating a door frame and elements installed in the door frame according to an embodiment of the present disclosure, and FIG. 32 is an exploded perspective view illustrating the door frame and the elements installed in the door frame, which are illustrated in FIG. 31, in an exploded manner. Also, FIG. 33 is an enlarged view of portions of the door frame and the elements installed in the door frame, which are illustrated in FIG. 31, and FIG. 34 is a view illustrating a state in which a first heating part and a protective grille are removed from the door frame illustrated in FIG. 33.

In FIGS. 31, 33, and 34, a glass and a reflector are not illustrated.

Referring to FIGS. 31 to 34, the door frame 320 is coupled to the door 300 in such a way that the door frame 320 covers the lower portion of the door upper surface part 310. The door frame 320 may be coupled to the door 300 in such a way that the door frame 320 supports the first heating part 400. Also, the first heating part 400 coupled to the door frame 320 may be maintained in a state of being disposed in the door 300, more specifically, at the lower portion of the door upper surface part 310.

The door frame 320 may include a coupling part 321 and a heater mounting part 325. The heater mounting part 325 may be provided in the form protruding from the coupling part 321, and the first heating part 400 may be coupled to the heater mounting part 325.

The coupling part 321 may be coupled to the door upper surface part 310 so that the heater mounting part 325 is supported by the door upper surface part 310. The coupling part 321 may be provided in the form of a square-shaped frame in which a through-hole is formed.

A seating surface 322 may be formed at an inner side surface of the coupling part 321 adjacent to the through-hole. The seating surface 322 may form a plane whose height is lower than that of an upper surface of the coupling part 321, and surrounding portions of edges of the glass 335 may be seated on the seating surface 322.

In this way, the glass 335 seated on the seating surface 322 may be disposed at upper portions of the heater mounting part 325 and the first heating part 400 installed at the heater mounting part 325 in such a way that the glass 335 covers the through-hole from the top. In this case, the seating surface 322 may form a plane whose height is lower than that of the upper surface of the coupling part 321. The seating surface 322 may form a plane whose height is lower than that of the coupling part 321 as much as a height substantially corresponding to a thickness of the glass 335. In this way, the glass 335 may be installed in the door frame 320 while being disposed at a position where the glass 335 does not protrude upward past the upper surface of the coupling part 321.

The seating surface 322 may be disposed at both sides of the through-hole in the left-right direction. The seating surface 322 may also be disposed at one side or the other side of the through-hole in the front-rear direction. In the present embodiment, the seating surface 322 is disposed at both sides of the through-hole in the left-right direction and the front side of the through-hole. Accordingly, the glass 335 may be stably installed in the door frame 320 such that surrounding portions of three edges of the glass 335 are supported by the seating surface 322.

Also, since movement of the glass 335 in the left-right direction is restricted by the inner side surface of the coupling part 321 surrounding the seating surface 322, an installation position of the glass 335 may be guided in the left-right direction, and shaking of the glass 335 may be suppressed in the left-right direction such that the installation of the glass 335 may be stably performed.

Further, a restricting rib 323 and a stopper 324 may be further provided in the door frame 320. The restricting rib 323 may be disposed at one side of the through-hole in the front-rear direction, and the stopper 324 may be disposed at the other side of the through-hole in the front-rear direction. In the present embodiment, the restricting rib 323 is illustrated as being disposed at the rear of the through-hole, and the stopper 324 is illustrated as being disposed at the front of the through-hole.

The restricting rib 323 may be formed to protrude from the coupling part 321. Specifically, the restricting rib 323 may be formed in a shape in which a portion protruding upward from the coupling part 3321 and a portion protruding toward the through-hole from the portion protruding upward are connected in an L-shape. The restricting rib 323 interferes with a rear edge and an upper surface of the glass 335 from the rear of the glass 335, thereby restricting rearward and upward movements of the glass 335.

The stopper 324 may be formed to protrude upward from the coupling part 321. The stopper 324 interferes with a front edge of the glass 335 from the front of the glass 335, thereby restricting forward movement of the glass 335.

That is, the glass 335 may be seated on the seating surface 322 such that the surrounding portions of the three edges of the glass 335 are supported by the seating surface 322 and both sides of the glass 335 in the left-right direction are supported by the inner side surface of the coupling part 321. Also, the forward movement of the glass 335 may be restricted by the stopper 324, and the rearward and upward movements of the glass may be restricted by the restricting rib 323. In this way, the glass 335 may be stably supported and installed in the door frame 320.

Meanwhile, the first heating part 400 may include a heating element 410, a first connecting end 420, and a second connecting end 430.

The heating element 410 corresponds to a portion emitting heat in the first heating part 400 provided in the form of an electric heater. The heating element 410 may be formed in the shape of a rod having a predetermined length.

The first connecting end 420 is disposed at an end of one side of the heating element 410 in the longitudinal direction, and the second connecting end 430 is disposed at an end of the other side of the heating element 410 in the longitudinal direction.

At least one of the first connecting end 420 and the second connecting end 430 includes a cylindrical part 421 and a key-shaped part 425. In the present embodiment, both the

first connecting end **420** and the second connecting end **430** are illustrated as including the cylindrical part **421** and the key-shaped part **425**.

The cylindrical part **421** is disposed at an end of the heating element **410** in the longitudinal direction. The cylindrical part **421** may be formed in a cylindrical shape in which an underside of a circular shape is disposed at the outermost end of the first heating part **410**.

The key-shaped part **425** is disposed between the heating element **410** and the cylindrical part **421**. That is, the key-shaped part **425** is disposed at both side ends of the heating element **410** in the longitudinal direction, and the cylindrical part **421** is disposed at the outermost side of the heating element **410** in the longitudinal direction.

The key-shaped part **425** may be formed in a flat hexahedral shape whose thickness is smaller than a diameter of the cylindrical part **421** and whose width is larger than the diameter of the cylindrical part **421**. For example, a pair of quadrilateral surfaces **426** (hereinafter referred to as "first surfaces") parallel to a width direction of the key-shaped part **425** may be disposed to be spaced apart from each other in a thickness direction of the key-shaped part **425** and form two side surfaces of the key-shaped part **425**. Also, two pairs of quadrilateral surfaces **427** (hereinafter referred to as "second surfaces") parallel to the thickness direction of the key-shaped part **425** may be disposed between the pair of first surfaces **426** and form an upper surface and a lower surface of the key-shaped part **425**.

In this case, the first surface **426** may be formed of a quadrilateral surface having a side longer than the diameter of the cylindrical part **421**, and the second surface **427** may be formed of a quadrilateral surface having a side shorter than the diameter of the cylindrical part **421**.

Therefore, when the first connecting end **420** or the second connecting end **430** is viewed in the longitudinal direction of the first heating part **410**, the cylindrical part **421** may protrude outward past the key-shaped part **425** in the radial direction of the cylindrical part **421** in most of the region, and the key-shaped part **425** may protrude outward past the cylindrical part **421** in the radial direction of the cylindrical part **421** only in a portion of the region.

The heater mounting part **325** is provided to fix the first connecting end **420** and the second connecting end **430** as described above. The heater mounting part **325** may include a first connecting end fixing part **326** which fixes the first connecting end **420** and a second connecting end fixing part **327** which fixes the second connecting end **430**.

At least one of the first connecting end fixing part **326** and the second connecting end fixing part **327** may include a cover a and a support wall b. In the present embodiment, both the first connecting end fixing part **326** and the second connecting end fixing part **327** are illustrated as identically including the cover a and the support wall b.

The cover a is provided in the form of surrounding the surrounding portions of the connecting end from the outer side of the connecting end in the circumferential direction. The cover a may be formed in a curved shape surrounding a lower portion and one side portion of the connecting end and may be formed in a length corresponding to a length of the connecting end or in a length slightly longer than the length of the connecting end.

Further, the heater mounting part **325** may further include a shielding plate **328**. The shielding plate **328** is disposed at a side farther from the center of the cooking compartment in the front-rear direction than the first heating part **400** and connects the first connecting end fixing part **326** and the second connecting end fixing part **327** to each other. The shielding plate **328** may be formed in the shape of a plate having a length extending in the longitudinal direction of the first heating part **400**.

According to the present embodiment, the first connecting end fixing part **326** and the second connecting end fixing part **327** are disposed at both end portions of the first heating part **400** in the longitudinal direction. Also, the shielding plate **328** is disposed at a side farther from the center of the cooking compartment in the front-rear direction than the first heating part **400**, and of a front side and a rear side of the first heating part **400**.

Also, the cover a is disposed at a side closer to the center of the cooking compartment in the front-rear direction than the first heating part **400**, and of the front side and the rear side of the first heating part **400**. The cover a may surround the connecting end at a lower portion of the first heating part **400** and at the side closer to the center of the cooking compartment in the front-rear direction than the first heating part **400**.

A lower side of the cover a is connected to the shielding plate **328**. Accordingly, a space surrounded by the cover a and the shielding plate **328**, which are connected in a U-shape, is formed around the connecting end.

The support wall b is disposed in the space surrounded by the cover a and the shielding plate **328** as described above. The support wall b may be formed to protrude towards the space from the cover a and the shielding plate **328**. The support wall b formed in this way may divide the space surrounded by the cover a and the shielding plate **328** into an inner side space and an outer side space in the longitudinal direction of the first heating part **400**. Also, the connecting end may be fitted and coupled to the support wall b.

A coupling hole c and a through-hole d may be formed in the support wall b.

The coupling hole c may be formed to pass through the support wall b. The coupling hole c may have a shape corresponding to the shape of an outer circumferential surface of the cylindrical part **421**, e.g., a hollow circular shape. By the cylindrical part **421** being fitted into the coupling hole c having the above-described shape, the connecting end may be fitted and coupled to the support wall b.

The through-hole d may be formed to pass through the support wall b. The through-hole d may be formed by being cut out up to the coupling hole c from an upper side end portion of the support wall b. The through-hole d may be formed to pass through the support wall b while having a width corresponding to the length of the short side of the key-shaped part **425**. In this way, the through-hole d may form a passage connecting the coupling hole c and an outer portion of the support wall b to each other.

The through-hole d may be formed in a width corresponding to the length of the short side of the key-shaped part **425**, in other words, the thickness of the key-shaped part **425**.

Any one of the first connecting end **420** and the second connecting end **430** may pass through the through-hole d and be inserted into the coupling hole c in a state in which the first heating part **400** takes a first posture. Here, the first posture is defined as a posture of the first heating part **400** in which the surface parallel to the thickness direction of the key-shaped part **425**, that is, the second surface **427**, is disposed parallel to a width direction of the through-hole d (see FIG. **36**).

Further, an extension hole e may be further formed in the support wall b. The extension hole e may be formed to pass through the support wall b like the through-hole d. The

extension hole e may be formed in the shape in which the through-hole d formed at an upper portion of the coupling hole c, and passes through the coupling hole c and extends to the lower portion of the coupling hole c.

When the connecting end takes the first posture, the key-shaped part **425** protrudes more upward and downward than the cylindrical part **421**. Also, when the connecting end takes the first posture, for the cylindrical part **421** to reach a state in which the cylindrical part **421** is allowed to be inserted into the coupling hole c, the cylindrical part **421** and the coupling hole c should be disposed at the same height. However, for the cylindrical part **421** and the coupling hole c to be disposed at the same height, the portion of the key-shaped part **425** protruding downward should be disposed at a lower position than the coupling hole c.

To this end, the extension hole e may be formed at the lower portion of the coupling hole c, and the portion of the key-shaped part **425** protruding downward may be inserted into the extension hole e. That is, the extension hole e may provide a passage that allows the portion protruding downward of the key-shaped part **425**, which is inserted into the coupling hole c to take the first posture, by passing through the coupling hole c downward.

Also, the connecting end may further include an extension part **422**. The extension part **422** may be formed by the cylindrical part **421** extending towards the key-shaped part **425**. The extension part **422** is formed to protrude outward in the thickness direction of the key-shaped part **425** from the first surface **426** of the key-shaped part **425** so that a step **423** is formed at a surface of the extension part **422** parallel to the width direction of the key-shaped part **425**, that is, between the extension part **422** and the first surface **426**. By having the extension part **422** formed in this way, a region in which the extension part **422** and the key-shaped part **425** overlap with each other is formed in a portion of the key-shaped part **425** adjacent to the cylindrical part **421**.

In this region, the extension part **422** protrudes further in the thickness direction of the key-shaped part **425** than the first surface **426** of the key-shaped part **425**, and the second surface **427** of the key-shaped part **425** protrudes further in the width direction of the key-shaped part **425** than the extension part **422**.

Since the extension part **422** is formed as described above, a strength of a coupling portion between the cylindrical part **421** and the key-shaped part **425** may be further reinforced. When the extension part **422** is not present, the coupling portion between the cylindrical part **421** and the key-shaped part **425** would be limited to an end portion of a side surface of the key-shaped part **425**. However, since the extension part **422** is formed at the connecting end, the coupling portion between the cylindrical part **421** and the key-shaped part **425** may extend to the point where the extension part **422** and the key-shaped part **425** overlap with each other, and thus the strength of the coupling portion between the cylindrical part **421** and the key-shaped part **425** may be further reinforced.

Also, the step **423** formed due to the extension part **422** may serve to guide a position at which the key-shaped part **425** is inserted into the through-hole d when the connecting end and the support wall b are fitted and coupled to each other. This will be described in detail below.

Meanwhile, each of the first connecting end fixing part **326** and the second connecting end fixing part **327** may further include an outer wall f. The outer wall f may be disposed at an outer side of each support wall b in a longitudinal direction of the heating element **410** and may be connected to the inner side surface of the coupling part **321**. The outer wall f forms the outermost side wall of each of the first connecting end fixing part **326** and the second connecting end fixing part **327** in the longitudinal direction of the heating element **410**.

A space surrounded by the cover a, the support wall b, the outer wall f, and the shielding plate **328** is formed in each of the first connecting end fixing part **326** and the second connecting end fixing part **327**. The corresponding space is a space whose side portions are surrounded by the cover a, the support wall b, the outer wall f, and the shielding plate **328** and whose lower portion is surrounded by the cover a. At least a portion of the cylindrical part **421** at a fixing end fixed to the first connecting end fixing part **326** or the second connecting end fixing part **327** is inserted into the space.

In the space, the cylindrical part **421** may be connected to a cable. The cable connected to the cylindrical part **421** may be a signal cable which transmits a control signal generated in the first control board **500** to the first heating part **400**, may be a power cable which supplies power to the first heating part **400**, or may be both the signal cable and the power cable.

Referring to FIG. **7**, the signal cable and the power cable may be installed at the cable mounting parts **340** and **345** provided in the door upper surface part **310**. Also, the coupling between the door upper surface part **310** and the door frame **320** is performed in a state in which the coupling part **321** covers the portions where the cable mounting parts **340** and **345** are disposed.

A plurality of fastening bosses may be disposed in the cable mounting parts **340** and **345**. Also, a plurality of fastening holes **320***a* may be disposed in the door frame **320** so as to correspond to the fastening bosses. When portions where the fastening holes **320***a* and the fastening bosses are formed are fastened using a fastening member after matching the positions of the door upper surface part **310** and the door frame **320** so that the positions of the fastening holes **320***a* and the fastening bosses **341** and **346** match with each other, the coupling between the door upper surface part **310** and the door frame **320** may be performed. In this case, the portions where the cable mounting parts **340** and **345** are disposed are covered by the coupling part **321**.

Although the glasses **330** and **335** do not cover the portions where the cable mounting parts **340** and **345** are disposed, the first heating part **400** and the heater mounting part **325** are disposed at a lower portion of a region covered by the glass **335**. Therefore, for the cables installed at the cable mounting parts **340** and **345** to be connected to the connecting end, as illustrated in FIGS. **32** to **35**, a passage should be formed between the region of the coupling part **321** not covered by the glass **335** and the region of the heater mounting part **325** covered by the glass **335**.

In consideration of such aspect, in the present embodiment, a concave groove g is provided in a connecting portion between the outer wall f and the coupling part **321**. At the connecting portion between the outer wall f and the coupling part **321**, the concave groove g forms the upper surface of the coupling part **321**, more specifically, a surface more concave than the seating surface **322** of the coupling part **321**. The concave groove g formed in this way provides a gap through which the cable may pass to be disposed at a lower portion of the glass **335** seated on the seating surface **322**, thereby allowing a passage through which the cable may pass to be disposed between the cable mounting parts **340** and **345** (see FIG. **7**) and the space housing the cylindrical part **421** of the connecting end.

Meanwhile, a reference numeral **320***b* which has not been described above indicates a hole formed in the door frame

320 to pass through the door frame 320 to form, on the door frame 320, a passage for allowing the hinge part 810 (see FIG. 2) to pass through the door frame 320.

Meanwhile, the cooking appliance of the present embodiment may further include a reflector 440 and a protective grille 450.

The reflector 440 is provided as an element which reflects heat of the first heating part 400 so that the heat of the first heating part 400 may be concentrated on the tray 200 (see FIG. 2). In the present embodiment, the reflector 440 is illustrated as being provided in the shape in which a reflective surface forming a plane parallel to the shielding plate 328 and a reflective surface forming a plane parallel to the glass 335 are connected to each other in an L-shape. The reflector 440 may be coupled to the shielding plate 328, thereby being installed in the door frame 320 (see FIG. 8).

The reflector 440 installed as described above may reflect heat of the first heating part 400 while blocking the first heating part 400 and the shielding plate 328 from each other and blocking the first heating part 400 and the glass 335 from each other, thereby contributing to the concentration of the heat of the first heating part 400 on the tray 200.

The protective grille 450 is provided as an element for protecting the first heating part 400 while allowing the heat of the first heating part 400 to be transmitted to the tray 200. The protective grille 450 is disposed to be spaced apart from the shielding plate 238 with the first heating part 400 disposed therebetween.

The protective grille 450 may include a plurality of steel wires 451 and a plurality of fixing members 453. Each steel wire 451 has a length extending in the longitudinal direction of the first heating part 400 in such a way that each steel wire 451 has a length substantially corresponding to the length of the first heating part 400 or a length slightly longer than the length of the first heating part 400.

The plurality of steel wires 451 are arranged in the form surrounding the surrounding portion of the first heating part 400 from the outside of the first heating part 400 in the circumferential direction. The plurality of steel wires 451 may be disposed to be spaced a predetermined distance apart from each other in the circumferential direction of the first heating part 400.

According to the present embodiment, the surrounding portion of the first heating part 400 in the circumferential direction is surrounded by the reflector 440 and the protective grille 450. That is, one side of the first heating part 400 in the front-rear direction and an upper portion of the first heating part 400 are surrounded by the reflector 440, and the remaining portions of the first heating part 400, that is, the other side of the first heating part 400 in the front-rear direction and the lower portion of the first heating part 400 are surrounded by the protective grille 450.

Accordingly, the plurality of steel wires 451 are arranged in the form of surrounding the other side of the first heating part 400 in the front-rear direction and the lower portion of the first heating part 400 from the outer side of the first heating part 400 in the circumferential direction. Also, the fixing members 453 are formed in the form extending in the direction in which the steel wires 451 are arranged. The plurality of fixing members 453 may be disposed to be spaced a predetermined distance apart from each other in the longitudinal direction of the steel wires 451.

The protective grille 450 may be installed in the door frame 320 in such a way that both side end portions of the protective grille 450 in the longitudinal direction are respectively fixed to the first connecting end fixing part 326 and the second connecting end fixing part 327.

To this end, a grille fixing part may be provided in each of the first connecting end fixing part 326 and the second connecting end fixing part 327. The grille fixing part is provided as a means for fixing the steel wires 451 of the protective grille 450 to the heater mounting part 325. The grille fixing part may include a plurality of fixing ribs h.

The plurality of fixing ribs h are disposed to be spaced a predetermined distance apart from each other in the direction in which the plurality of steel wires 451 are arranged. Also, each fixing rib h is formed to protrude from the cover a towards the first heating part 400. Accordingly, a fixing groove may be formed between the fixing ribs h. The distance at which the fixing ribs h are spaced apart from each other may be determined to allow the fixing groove to be formed in a width corresponding to a thickness of the steel wire 451.

By fitting and fixing the steel wire 451 to each fixing groove formed between the plurality of fixing ribs h as described above, the protective grille 450 and the grille fixing part may be fitted and coupled to each other. In this way, a task of installing the protective grille 450 in the door frame 320 may be easily and promptly performed just by a simple task of fitting and fixing both side end portions of the protective grille 450 to the grille fixing part formed at each of the first connecting end fixing part 326 and the second connecting end fixing part 327.

Further, the plurality of fixing ribs h formed to protrude from the cover a as described above may also serve as reinforcing structures for improving the strength of the cover a.

FIGS. 35 to 39 are views for showing a process in which the first heating part is installed in the door frame.

Hereinafter, the process in which the first heating part 400 is installed in the door frame 320 will be described with reference to FIGS. 35 to 39.

Referring to FIG. 35, installation of the protective grille 450 may be performed prior to installing the first heating part 400 in the door frame 320. The installation of the protective grille 450 may be performed in the form in which both side end portions of the protective griller 450 in the longitudinal direction are respectively fixed to the first connecting end fixing part 326 and the second connecting end fixing part 327. In this case, fixing of each end portion of the protective grille 450 may be performed in the form in which the steel wires 451 are fitted into the fixing grooves formed between the plurality of fixing ribs h so that the protective grille 450 and the grille fixing part are fitted and coupled to each other.

The installation of the first heating part 400 may be performed in a state in which the installation of the protective grille 450 is completed. For the first heating part 400 to be installed in the door frame 320, first, the first heating part 400 should take the first posture. In this case, both the first connecting end 420 and the second connecting end 430 reach a state in which the pair of first surfaces 426 face forward and downward and, of the two pairs of second surfaces 427, the pair of second surfaces 427 facing each other face upward and downward.

In this state, as illustrated in FIG. 36, any one of the first connecting end 420 and the second connecting end 430 is fitted into the support wall b. In the present embodiment, an example in which the first connecting end 420 is fitted to the support wall b provided in the first connecting end fixing part 326 is illustrated.

For the first connecting end 420 to be fitted into the support wall b, the first connecting end 420 should be inserted into the through-hole d formed in the support wall

b. To this end, the first connecting end **420** is inserted into the through-hole d in a state in which the position of the key-shaped part **425** matches the position of the through-hole d. In this process, the key-shaped part **425** is inserted into the through-hole d through a cut-out upper end of the support wall b and passes through the through-hole d to be inserted into the coupling hole c.

In this case, the second connecting end **430** maintains a state of not being fitted into the second connecting end fixing part **327**. That is, even when the first heating part **400** moves downward in the state in which the key-shaped part **425** of the first connecting end **420** is inserted into the coupling hole c, the second connecting end **430** is not fitted to the support wall b and maintains a state of being disposed outside of the support wall b.

In order to be fitted into the support wall b, the first connecting end **420** may be guided in the longitudinal direction to a position at which a region between a longitudinal end portion of the heating element **410** and the extension part **422** (hereinafter referred to as "depressed region") may overlap with the through-hole d. That is, in the first connecting end **420**, a portion able to pass through the through-hole d is limited to the depressed region. The depressed region may be clearly distinguished due to the characteristic of being depressed between the longitudinal end portion of the heating element **410** and the extension part **422**.

When a length of the depressed region is set to be substantially equal to the thickness of the support wall b or slightly longer than the thickness of the support wall b, the first heating part **400** may be easily guided to a position which allows the second connecting end **430** to maintain the state of not being fitted to the support wall b of the second connecting end fixing part **327** while the first connecting end **420** is fitted to the support wall b of the first connecting end fixing part **326**.

To this end, a separation distance L_1 between the support wall b of the first connecting end fixing part **326** and the support wall b of the second connecting end fixing part **327** satisfies the following relational expression.

$$L_H=L_{H1}+2L_{H2}+2L_{H3}$$

$$L_1=L_H-L_{H2}-L_{H3}$$

Here, L_H is an entire length of the first heating part, L_{H1} is a length of the heating element, L_{H2} is a distance between the end of one side of the heating element and a step, and L_{H3} is a distance between the step and the outermost end of the cylindrical part. Further, L_{H2} may also be referred to as a length of the depressed region as well as the distance between the end of one side of the heating element and the step.

That is, the separation distance L_1 between the support wall b of the first connecting end fixing part **326** and the support wall b of the second connecting end fixing part **327** is set to a length equal to a length excluding one connecting end from the heating element **410** and the pair of connecting ends **420** and **430** constituting the first heating part **400**.

When the separation distance L_1 between the support wall b of the first connecting end fixing part **326** and the support wall b of the second connecting end fixing part **327** is set as described above, when the depressed region of the first connecting end **420** is inserted into the through-hole d and fitted into the support wall b of the first connecting end fixing part **326**, the second connecting end **430** maintains the state of not being fitted into the support wall b of the second connecting end fixing part **327**.

Meanwhile, as illustrated in FIG. **37**, when the depressed region of the key-shaped part **425** passes through the through-hole d and is inserted into the coupling hole c, and thus the state in which the cylindrical part **421** is disposed at the same height as the coupling hole c is reached, the portion of the key-shaped part **425** protruding downward is inserted into the extension hole e, and the state in which the first connecting end **420** is unable to further move downward is reached.

In this state, as illustrated in FIG. **38**, the entire first heating part **400** is moved in the longitudinal direction of the first heating part **400** by moving the heating element **410** in a direction moving away from the support wall b of the first connecting end fixing part **326**. Accordingly, the key-shaped part **425** of the first connecting end **420** is separated from the support wall b. That is, the key-shaped part **425** of the first connecting end **420** is deviated from the coupling hole c, the through-hole d, and the extension hole e, and instead, the cylindrical part **421** is inserted into the coupling hole c such that the cylindrical part **421** of the first connecting end **420** and the support wall b of the first connecting end fixing part **326** are fitted and coupled to each other.

At the same time, in the second connecting end fixing part **327**, the cylindrical part **421** of the second connecting end **420** is inserted into the coupling hole c, and accordingly, the cylindrical part **421** of the second connecting end **430** and the support wall b of the second connecting end fixing part **327** are fitted and coupled to each other. In this case, the state in which the key-shaped part **425** of the second connecting end **420** is separated from the support wall b, that is, the state in which the key-shaped part **425** of the second connecting end **420** is not inserted into the coupling hole c, the through-hole d, and the extension hole e is also maintained in the second connecting end fixing part **327**.

To this end, the separation distance L_1 between the support wall b of the first connecting end fixing part **326** and the support wall b of the second connecting end fixing part **327** satisfies the following relational expression.

$$L_1=L_{H1}+2L_{H4}$$

Here, L_{H4} is a length of the key-shaped part **425**.

That is, the separation distance L_1 between the support wall b of the first connecting end fixing part **326** and the support wall b of the second connecting end fixing part **327** is set to a length equal to a length including the heating element **410** and the pair of key-shaped parts **425**.

When the separation distance L_1 between the support wall b of the first connecting end fixing part **326** and the support wall b of the second connecting end fixing part **327** are set as described above, when both the cylindrical part **421** of the first connecting end **420** and the cylindrical part **421** of the second connecting end **430** are fitted to the support walls b, both the key-shaped part **425** of the first connecting end **420** and the key-shaped part **425** of the second connecting end **430** maintain the state of not being fitted to the support walls b.

In this state, as illustrated in FIG. **39**, when the posture of the first heating part **400** is changed to a second posture, the installation of the first heating part **400** is completed. Here, the second posture is defined as a posture of the first heating part **400** in which the first surface **426** of the key-shaped part **425** is disposed parallel to the width direction of the through-hole d. The second posture of the first heating part **400** may be a state reached by the first heating part **400** rotating 90° about the longitudinal axis of the first heating part **400** from the first posture.

As the posture of the first heating part **400** is changed as described above, the key-shaped part **425** disposed at each of both side end portions of the first heating part **400** may be adhered to the respective support wall b, and accordingly, the first heating part **400** may be fixed to the heater mounting part **325** in a state in which the movement of the first heating part **400** is restricted in the longitudinal direction.

This may correspond to the advantageous effect obtained by designing the shapes of the first heating part **400** and the heater mounting part **325** so that the separation distance L_1 between the support wall b of the first connecting end fixing part **420** and the support wall b of the second connecting end fixing part **430** satisfies the relational expression, $L_1=L_{H1}+2L_{H4}$.

Further, a separation distance L2 between the support wall b and the outer wall f satisfies the following relational expression.

$$L_2 \geq L_{H3}$$

That is, the separation distance L2 between the support wall b and the outer wall f is set to a length longer than a length between the step **423** and the outermost end of the cylindrical part **421**.

When the separation distance L_2 between the support wall b and the outer wall f is set as described above, a space having a length corresponding to the separation distance L_2 is formed between the support wall b and the outer wall f. The extension part **422** and the cylindrical part **421** are inserted into the space formed between the support wall b and the outer wall f. Also, in the space, the connection between the cables and the connecting ends may be performed. That is, when the separation distance L_2 between the support wall b and the outer wall f is set as described above, sufficient space required for the insertion of the extension part **422** and the cylindrical part **421** and the connection between the cables and the connecting ends may be provided.

When the installation of the first heating part **400** is completed as described above, the installation of the reflector **440** may be performed. The installation of the reflector **440** may be performed in the form in which the reflector **440** is coupled to the shielding plate **328**.

Then, when the glass **335** (see FIG. **31**) is seated on the seating surface **332** of the door frame **320** and then fixed by the restricting rib **323** and the stopper **324**, the installation of the glass **335** is completed.

The task of connecting the connecting ends and the cables may be performed before or after the process of installing the glass **335**. Once all of these processes are completed, the door frame **320**, the first heating part **400**, the reflector **440**, the protective grille **450**, and the glass **335** may be provided as an integrally-assembled unit body. Also, when the door frame **320** which is integrally assembled with the first heating part **400**, the reflector **440**, the protective grille **450**, and the glass **335** as described above is coupled to the door upper surface part **310** (see FIG. **31**), the first heating part **400**, the reflector **440**, the protective grille **450**, and the glass **335** may be assembled to the door **300** at once.

Although not illustrated, once the installation of the first heating part **400** and the task of connecting the connecting ends and the cables are completed, open upper portions of the first connecting end fixing part **326** and the second connecting end fixing part **327** (see FIG. **31**) may be covered with caps so that the connecting ends are protected. For coupling between the caps and the first connecting end fixing part **326** and the second connecting end fixing part **327**, a coupling protrusion i may be provided to protrude from an upper portion of the cover a.

The door frame **320** of the present embodiment having the above-described configuration may provide the following advantageous effects.

First, since the door frame **320** is coupled to the lower portion of the door upper surface part **310**, the door frame **320** may cover the lower portion of the door upper surface part **310** so that the cable mounting parts **340** and **345** (see FIG. **7**) disposed inside the door upper surface part **310** and the cables installed at the cable mounting parts **340** and **345** are not exposed to the outside.

The door frame **320** may be coupled to the lower portion of the door upper surface part **310** in the form in which, while the portions where the cable mounting parts **340** and **345** are disposed are covered by the coupling part **321**, the door frame **320** is fastened to the cable mounting parts **340** and **345** using a fastening member. The door frame **320** coupled to the lower portion of the door upper surface part **310** in this way may cover the cable mounting parts **340** and **345** (see FIG. **7**) disposed inside the door upper surface part **310** and the cables installed at the cable mounting parts **340** and **345** so that the cable mounting parts **340** and **345** and the cables are not exposed to the outside, and the door frame **320** may be easily separated from the door **300** when necessary. Since the door frame **320** may safely protect the components inside the door upper surface part **310** while being easily separable when necessary, the door frame **320** may contribute to allowing maintenance and repair tasks of the cooking appliance to be performed easily and promptly.

Second, the door frame **320** provides a frame in which the first heating part **400**, the components related thereto, and the glass **335** may be assembled to a single unit body. In this way, the door frame **320** may contribute to allowing the components management and manufacturing management to be more efficiently performed.

In addition to the structures for fixing the glass **335** to the door frame **320**, the structures for fixing the first heating part **400**, the reflector **440**, and the protective grille **450** to the door frame **320** are provided in the door frame **320**.

Accordingly, the glass **335**, the first heating part **400**, the reflector **440**, and the protective grille **450** may be provided as an integrally-assembled unit body coupled to the door frame **320**, and the glass **335**, the first heating part **400**, the reflector **440**, and the protective grille **450** may be assembled at once just by coupling the door frame **320** to the lower portion of the door upper surface part **310**.

Third, since the door frame **320** provides structures that allow the first heating part **400** to be easily and promptly installed at the door frame **320**, the door frame **320** may contribute to allowing the task of installing the first heating part **400** to be more efficiently performed.

According to the present embodiment, the installation of the first heating part **400** may be completed by a simple task in which one side end portion of the first heating part **400** is first fitted to any one of the first connecting end fixing part **326** and the second connecting end fixing part **327**, the first heating part **400** is moved in the longitudinal direction thereof so that both side end portions of the first heating part **400** are respectively fitted to the first connecting end fixing part **326** and the second connecting end fixing part **327**, and then the first heating part **400** is rotated.

In this case, since the first connecting end fixing part **326** and the second connecting end fixing part **327** are not provided to be directional, the installation of the first heating part **400** is possible without problems regardless of which of the first connecting end fixing part **326** and the second

connecting end fixing part **327** is first fitted to the one side end portion of the first heating part **400**.

In this way, by allowing the task of installing the first heating part **400** to be performed more efficiently, the door frame **320** may contribute to allowing maintenance and repair tasks performed for replacing the first heating part **400**, as well as the task of manufacturing the cooking appliance, to be easily and promptly performed.

The present disclosure has been described above with reference to the embodiments illustrated in the drawings, but the embodiments are merely illustrative. Those of ordinary skill in the art to which the present disclosure pertains should understand that various modifications and other equivalent embodiments are possible from the above embodiments. Therefore, the actual technical scope of the present disclosure should be defined by the claims below.

What is claimed is:

1. A cooking appliance comprising:

a housing having a cooking compartment formed therein, wherein the housing has an upper opening;

a door having a door upper surface part for opening and closing the upper opening of the housing;

a heating part disposed at the door; and

a door frame that supports the heating part and is coupled to the door, wherein the door frame includes a heater mounting part to which the heating part is coupled, and a coupling part mounted to the door upper surface part and supporting the heater mounting part on the door upper surface part,

wherein:

a through-hole is formed in each of the door upper surface part and the door frame,

at least one glass covers the through-hole.

2. The cooking appliance according to claim **1**, wherein:

the door frame covers a bottom portion of the door upper surface part; and

the heating part is installed on the door frame, and is disposed at the bottom portion of the door upper surface part.

3. The cooking appliance according to claim **1**, wherein at least one of the heating part and the heater mounting part is disposed at a front outer side and a rear outer side of the through-hole on a plane in a horizontal direction corresponding to the door upper surface part.

4. The cooking appliance according to claim **1**, wherein:

the heating part includes a heating element, a first connecting end disposed at an end of the heating element in a longitudinal direction, and a second connecting end disposed at another end of the heating element in the longitudinal direction; and

the heater mounting part includes a first connecting end fixing part that fixes the first connecting end and a second connecting end fixing part that fixes the second connecting end.

5. The cooking appliance according to claim **4**, wherein each of the first connecting end fixing part and the second connecting end fixing part includes:

a cover that surrounds an outer side of the respective first connecting end and second connecting end in a circumferential direction; and

a support wall which partitions a space formed by the cover into inner and outer spaces and, the first connecting end and second connecting end are fitted into the respective support wall.

6. The cooking appliance according to claim **5**, wherein:

the heating element is formed in a shape of a rod having a predetermined length;

each of the first connecting end and the second connecting end includes a cylindrical part that is formed in a cylindrical shape and is disposed at the respective end of the heating element in the longitudinal direction, and a key-shaped part that is disposed between the heating element and the respective cylindrical part and is formed in a flat hexahedral shape whose thickness is smaller than a diameter of the cylindrical part and whose width is larger than the diameter of the cylindrical part; and

each support wall includes a coupling hole that is formed to pass through the support wall and is formed in a shape corresponding to a shape of an outer circumferential surface of the cylindrical part, and the through-hole that is formed to pass through the support wall and is formed as a passage that connects the coupling hole and an outer portion of the support wall to each other.

7. The cooking appliance according to claim **6**, wherein the through-hole of the support wall is formed with a width corresponding to the thickness of the key-shaped part.

8. The cooking appliance according to claim **7**, wherein:

the heating part is moved in a first direction so that one of the first connecting end and the second connecting end passes through the through-hole and is inserted into the coupling hole of one support wall and takes a first posture, wherein the first posture is a posture in which a surface parallel to a thickness direction of the key-shaped part is disposed parallel to a width direction of the through-hole; and then

the heating part is moved in a second direction opposite to the first direction so that the other one of the first connecting end and the second connecting end passes through the through-hole and is inserted into the coupling hole of the other support wall and takes a second posture,

wherein the second posture is a posture in which the heating part has rotated by an angle about the longitudinal axis of the first heating part from the first posture.

9. The cooking appliance according to claim **7**, wherein:

each of the cylindrical part further includes an extension part that is formed to extend toward the respective key-shaped part; and

the extension part is formed to protrude outward from a surface parallel to a width direction of the respective key-shaped part so that a step is formed on the surface parallel to the width direction of the respective key-shaped part.

10. The cooking appliance according to claim **9**, wherein a separation distance (L_1) between the support wall of the first connecting end fixing part and the support wall of the second connecting end fixing part satisfies the following relational expression:

$$L_H = L_{H1} + 2L_{H2} + 2L_{H3}$$

$$L_1 = L_H - L_{H2} - L_{H3}$$

where L_H is an entire length of the heating part, L_{H1} is a length of the heating element, L_{H2} is a distance between the end of one side of the heating element and the step, and L_{H3} is a distance between the step and an outermost end of the cylindrical part.

11. The cooking appliance according to claim 10, wherein the separation distance (L_1) between the support wall of the first connecting end fixing part and the support wall of the second connecting end fixing part satisfies the following relational expression:

$$L_1=L_{H1}+2L_{H4}$$

where L_{H4} is a length of the key-shaped part.

12. The cooking appliance according to claim 10, further comprising an outer wall disposed outside of each of the support wall in the longitudinal direction of the heating element,

wherein a separation distance (L_2) between the support wall and the outer wall satisfies the following relational expression:

$$L_2 \geq L_{H3}.$$

13. The cooking appliance according to claim 12, wherein:

at least a part of each cylindrical part of the heating part are inserted into a space surrounded by the cover, the support wall, and an outer wall of the respective first connecting end fixing part and second connecting end fixing part;

a plurality of connecting portions, each outer wall is connected to the coupling part through a respective connecting portion; and

a concave groove recessed from an upper surface of the coupling part is formed in the respective connecting portion.

14. The cooking appliance according to claim 5, further comprising a shielding plate that is disposed at a side farther from a center of the cooking compartment in a front-rear direction than the heating part and connects the first connecting end fixing part and the second connecting end fixing part to each other.

15. The cooking appliance according to claim 14, further comprising a protective grille disposed to be spaced apart from the shielding plate with the heating part interposed therebetween.

16. The cooking appliance according to claim 15, wherein:

the protective grille includes a plurality of steel wires that extend in the longitudinal direction of the heating part, and a plurality of fixing members that extend in a direction in which the plurality of steel wires are arranged and fix the plurality of steel wires; and

the plurality of steel wires are arranged to surround an outside of the heating part in a circumferential direction.

17. The cooking appliance according to claim 16, wherein:

each of the first connecting end fixing part and the second connecting end fixing part includes a grille fixing part that fixes the steel wires to the heater mounting part;

the grille fixing part includes a plurality of fixing ribs that are formed to protrude from the cover toward the heating part; and

the plurality of steel wires are fitted into fixing grooves formed between the plurality of fixing ribs.

18. A cooking appliance comprising:

a housing having a cooking compartment formed therein, wherein the housing has an upper opening;

a door having a door upper surface part for opening and closing the upper opening of the housing;

a heating part disposed at the door; and

a door frame that supports the heating part and is coupled to the door, wherein the door frame includes a heater mounting part to which the heating part is coupled, and a coupling part mounted to the door upper surface part and supporting the heater mounting part on the door upper surface part,

a through-hole formed in each of the door upper surface part and inside the coupling part in a planar direction; and

a glass covering the through-hole formed inside the coupling part, wherein the glass is disposed at an upper side of the heater mounting part.

19. The cooking appliance according to claim 18, wherein:

the heating part includes a heating element, a first connecting end disposed at an end of the heating element in a longitudinal direction, and a second connecting end disposed at another end of the heating element in the longitudinal direction; and

the heater mounting part includes a first connecting end fixing part that fixes the first connecting end and a second connecting end fixing part that fixes the second connecting end,

wherein each of the first connecting end fixing part and the second connecting end fixing part includes:

a cover that surrounds an outer side of the respective first connecting end and second connecting end in a circumferential direction; and

a support wall which partitions a space formed by the cover into inner and outer spaces and, the first connecting end and second connecting end are fitted into the respective support wall,

wherein the cooking appliance further comprising:

a shielding plate that is disposed at a side farther from a center of the cooking compartment in a front-rear direction than the heating part and connects the first connecting end fixing part and the second connecting end fixing part to each other; and

a reflector that reflects heat of the heating part, blocks the heating part and the shielding plate from each other, and blocks the heating part and the glass from each other.

20. The cooking appliance according to claim 18, wherein:

the heating part includes a heating element, a first connecting end disposed at an end of the heating element in a longitudinal direction, and a second connecting end disposed at another end of the heating element in the longitudinal direction; and

the heater mounting part includes a first connecting end fixing part that fixes the first connecting end and a second connecting end fixing part that fixes the second connecting end,

wherein each of the first connecting end fixing part and the second connecting end fixing part includes:

a cover that surrounds an outer side of the respective first connecting end and second connecting end in a circumferential direction; and

a support wall which partitions a space formed by the cover into inner and outer spaces and, the first con-

necting end and second connecting end are fitted into the respective support wall,

wherein:

seating surfaces on which the glass is seated are formed at an inner side surface of the coupling part adjacent to the through-hole formed inside the coupling part;

the seating surfaces are disposed on both sides of the through-hole formed inside the coupling part in a left-right direction; and

the coupling part includes a restricting rib that is disposed at one side of the through-hole formed inside the coupling part in the front-rear direction and restricts movement of the glass to one side in the front-rear direction and movement of the glass in an upward direction, and a stopper that is disposed at the other side of the through-hole formed inside the coupling part in the front-rear direction and restricts movement of the glass to the other side in the front-rear direction.

* * * * *