US 20250259320A1

(19) United States
(12) Patent Application Publication
MASUDA

(10) Pub. No.: US 2025/0259320 A1
(43) Pub. Date: Aug. 14, 2025

(54) **INFORMATION PROCESSING DEVICE, INFORMATION PROCESSING METHOD, AND PROGRAM**

(71) Applicant: **FUJIFILM CORPORATION**, Tokyo (JP)

(72) Inventor: **Tomonori MASUDA**, Saitama (JP)

(21) Appl. No.: **19/195,884**

(22) Filed: **May 1, 2025**

Related U.S. Application Data

(63) Continuation of application No. 18/333,156, filed on Jun. 12, 2023, which is a continuation of application No. 17/356,725, filed on Jun. 24, 2021, now Pat. No. 11,727,585, which is a continuation of application No. 16/705,193, filed on Dec. 5, 2019, now Pat. No. 11,074,705, which is a continuation of application No. 15/954,627, filed on Apr. 17, 2018, now Pat. No. 10,546,381, which is a continuation of application No. PCT/JP2016/081597, filed on Oct. 25, 2016.

(30) **Foreign Application Priority Data**

Nov. 6, 2015 (JP) 2015-218642

Publication Classification

(51) **Int. Cl.**

G06T 7/521	(2017.01)
G01B 11/00	(2006.01)
G01S 17/08	(2006.01)
G06F 3/147	(2006.01)
G06T 7/55	(2017.01)
G06T 7/593	(2017.01)
G06T 7/73	(2017.01)
G09G 5/14	(2006.01)

(52) **U.S. Cl.**

CPC ***G06T 7/521*** (2017.01); ***G01B 11/002*** (2013.01); ***G01S 17/08*** (2013.01); ***G06F 3/147*** (2013.01); ***G06T 7/55*** (2017.01); ***G06T 7/593*** (2017.01); ***G06T 7/73*** (2017.01); ***G09G 5/14*** (2013.01); *G06T 2207/10012* (2013.01); *G09G 2340/12* (2013.01); *G09G 2370/16* (2013.01)

(57) **ABSTRACT**

Provided is an information processing device including an acquisition unit that acquires a first captured image, a second captured image, and a distance to a subject, and a derivation unit that derives an imaging position distance which is a distance between the first imaging position and the second imaging position, on the basis of a plurality of pixel coordinates for specifying a plurality of pixels of more than three pixels which are present in the same planar region as an emission position irradiated with the directional light beam on the real space and correspond to the position on the real space in each of the first captured image and the second captured image which are acquired by the acquisition unit, emission position coordinates which are derived on the basis of the distance acquired by the acquisition unit, a focal length of an imaging lens, and dimensions of imaging pixels.

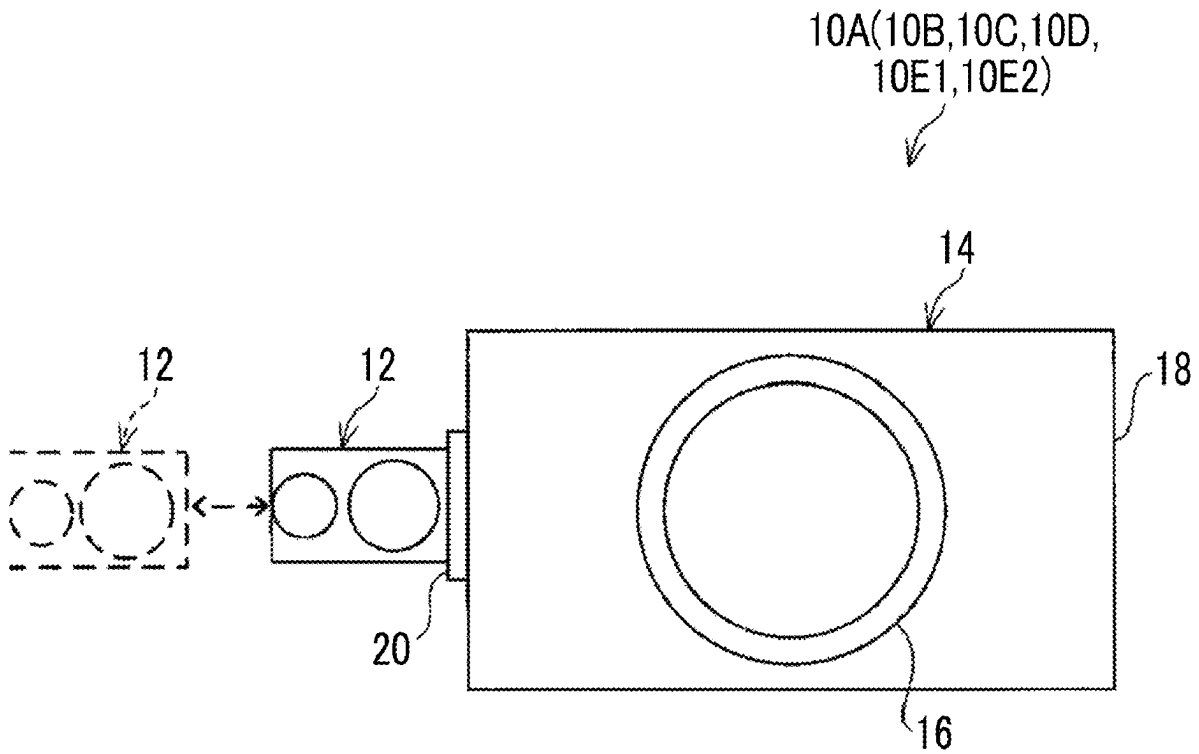

FIG. 1

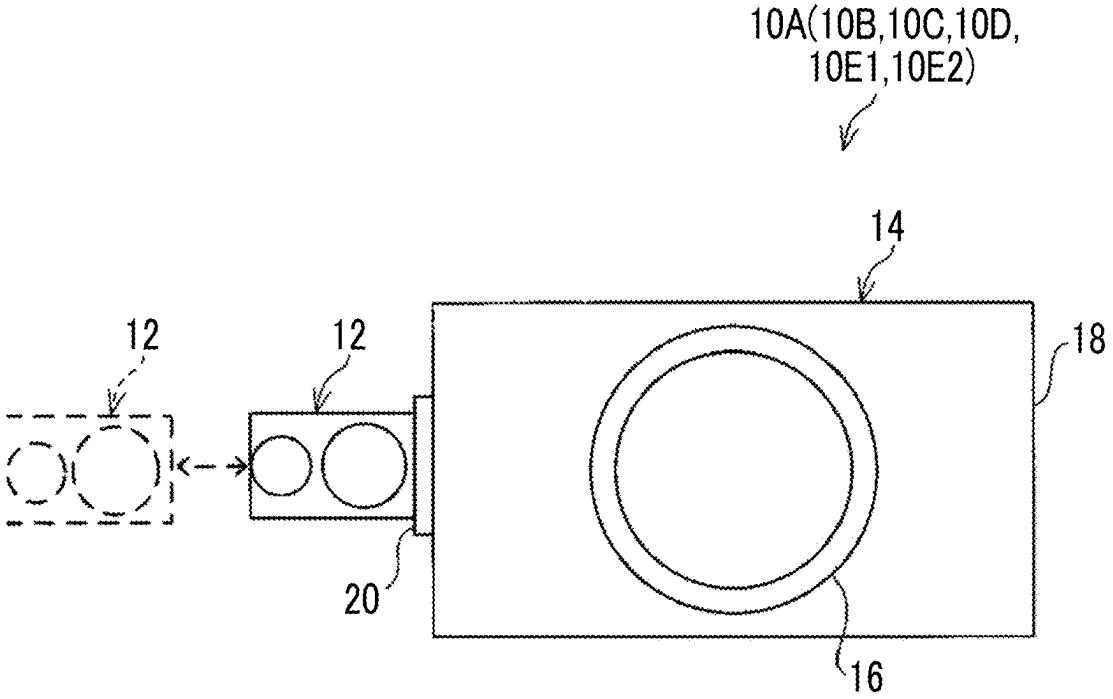

FIG. 2

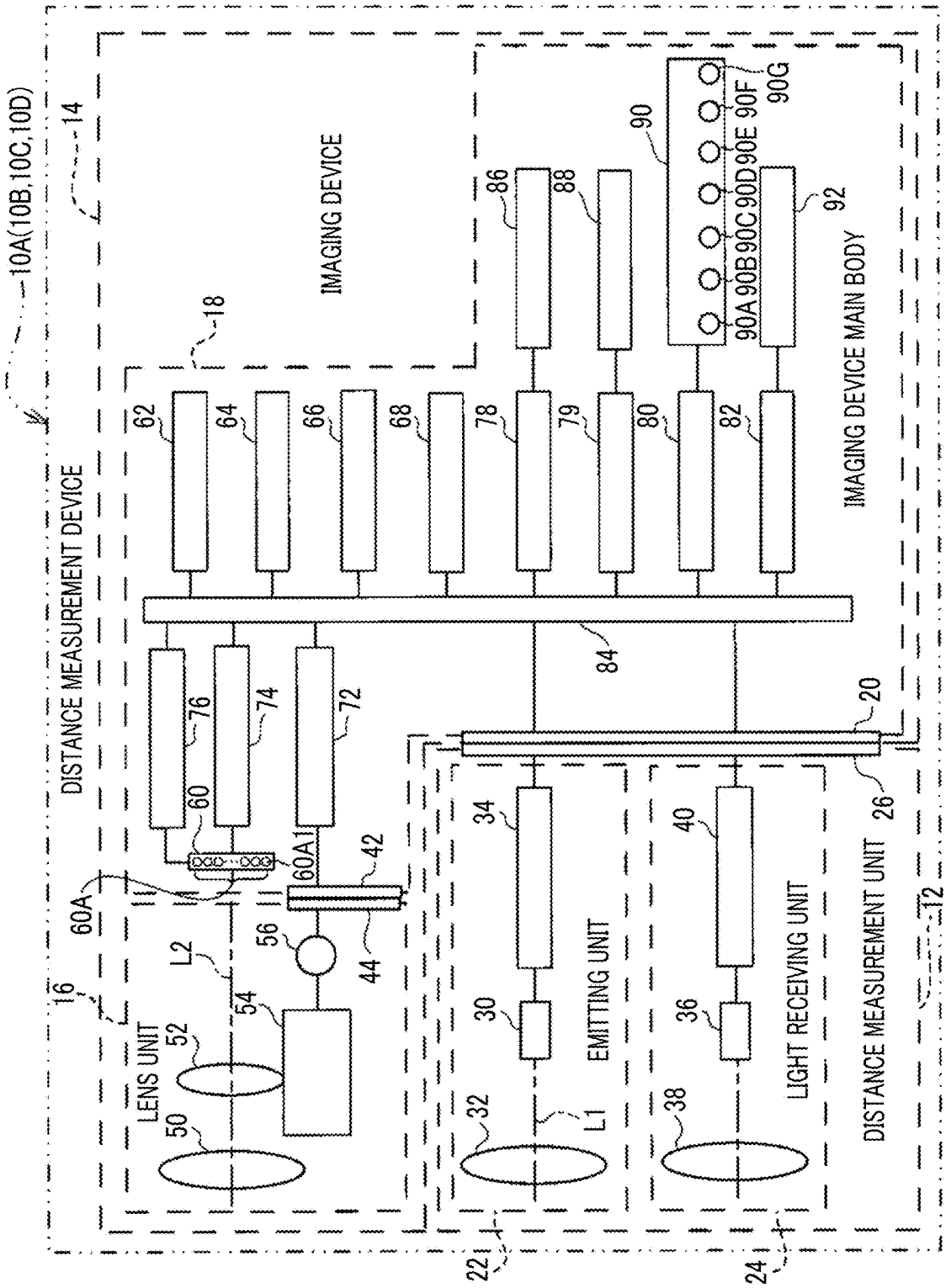
10A(10B,10C,10D)
14
DISTANCE MEASUREMENT DEVICE
IMAGING DEVICE
18
62
64
66
68
78
79
80
82
86
88
90
90A 90B 90C 90D 90E 90F
90G
92
IMAGING DEVICE MAIN BODY
84
20
26
12
76
74
72
60
60A1
42
44
60A
56
L2
54
16
LENS UNIT
52
50
34
30
32
L1
EMITTING UNIT
40
36
38
LIGHT RECEIVING UNIT
DISTANCE MEASUREMENT UNIT
22
24

FIG. 3

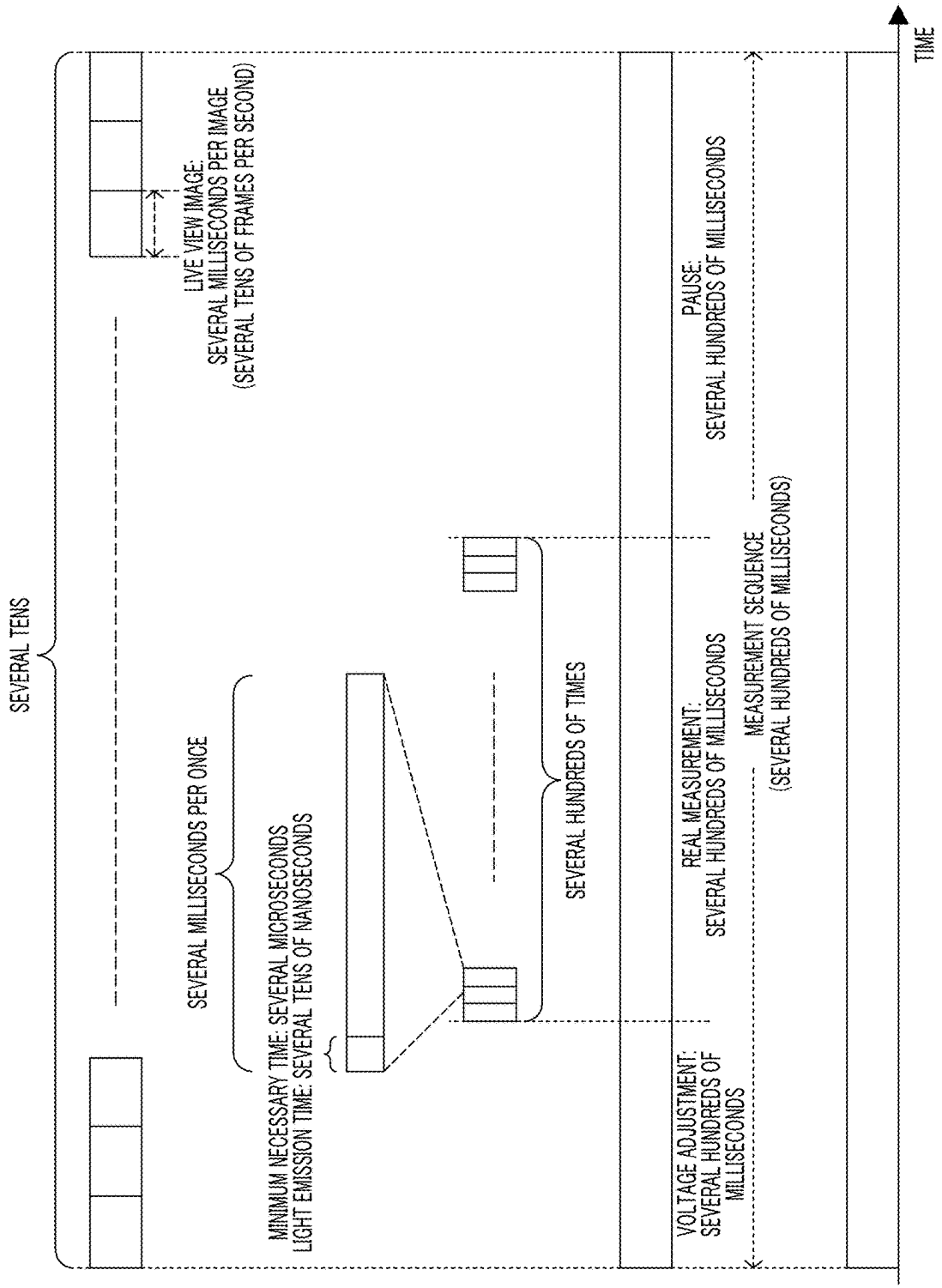
SEVERAL TENS
LIVE VIEW IMAGE:
SEVERAL MILLISECONDS PER IMAGE
(SEVERAL TENS OF FRAMES PER SECOND)
SEVERAL MILLISECONDS PER ONCE
MINIMUM NECESSARY TIME: SEVERAL MICROSECONDS
LIGHT EMISSION TIME: SEVERAL TENS OF NANOSECONDS
SEVERAL HUNDREDS OF TIMES
VOLTAGE ADJUSTMENT:
SEVERAL HUNDREDS OF
MILLISECONDS
REAL MEASUREMENT:
SEVERAL HUNDREDS OF MILLISECONDS
PAUSE:
SEVERAL HUNDREDS OF MILLISECONDS
MEASUREMENT SEQUENCE
(SEVERAL HUNDREDS OF MILLISECONDS)
TIME

FIG. 4

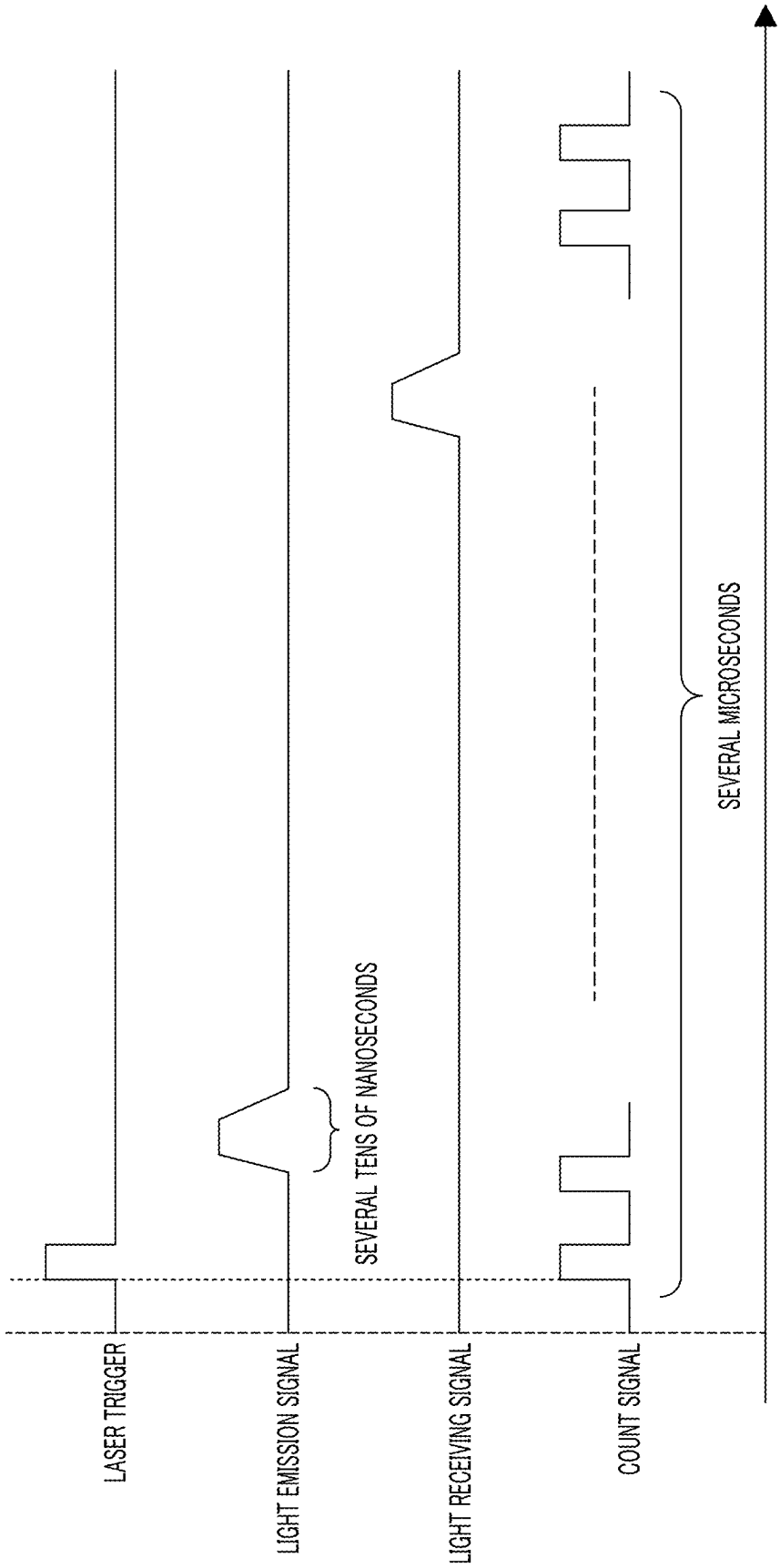
LASER TRIGGER
LIGHT EMISSION SIGNAL
SEVERAL TENS OF NANOSECONDS
LIGHT RECEIVING SIGNAL
COUNT SIGNAL
SEVERAL MICROSECONDS

FIG. 5

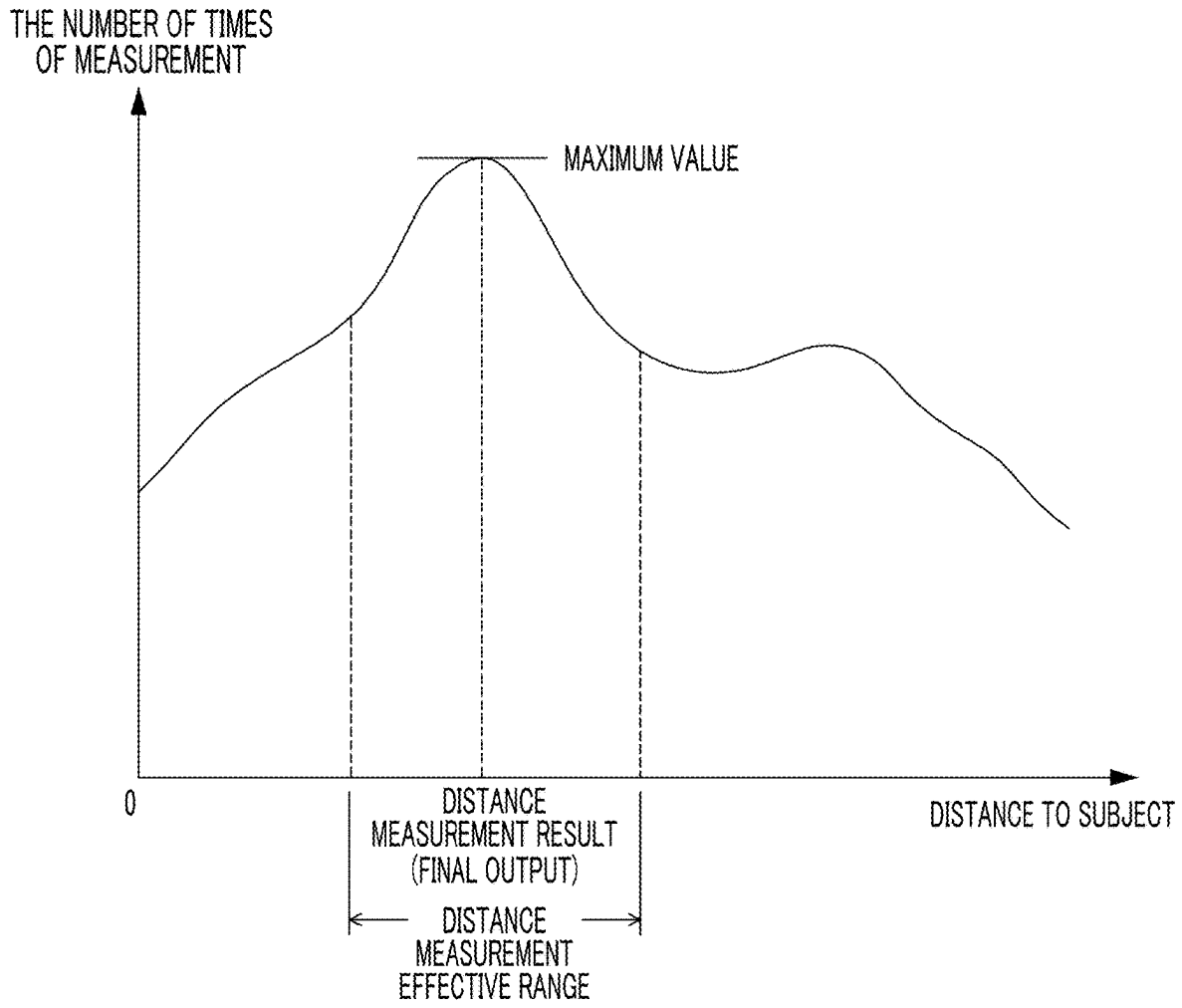
THE NUMBER OF TIMES
OF MEASUREMENT
MAXIMUM VALUE
0
DISTANCE
MEASUREMENT RESULT
(FINAL OUTPUT)
DISTANCE TO SUBJECT
DISTANCE
MEASUREMENT
EFFECTIVE RANGE

FIG. 6

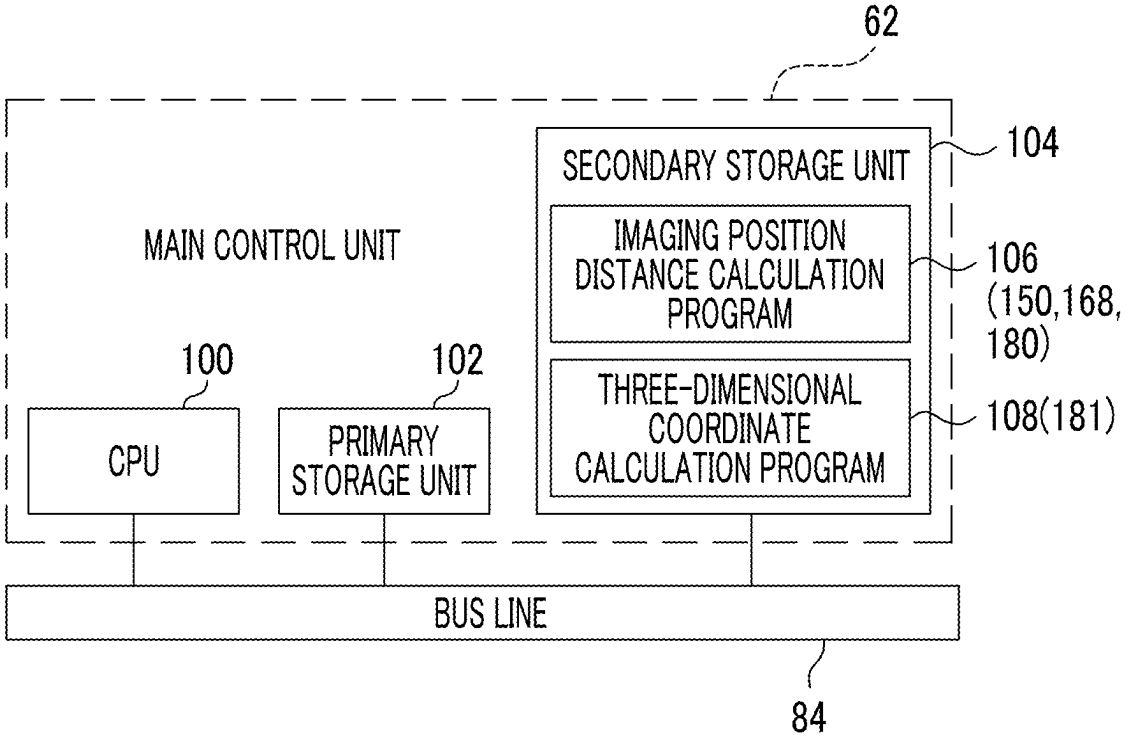
62
MAIN CONTROL UNIT
SECONDARY STORAGE UNIT
104
IMAGING POSITION DISTANCE CALCULATION PROGRAM
106 (150,168, 180)
THREE-DIMENSIONAL COORDINATE CALCULATION PROGRAM
108(181)
100
CPU
102
PRIMARY STORAGE UNIT
BUS LINE
84

FIG. 7

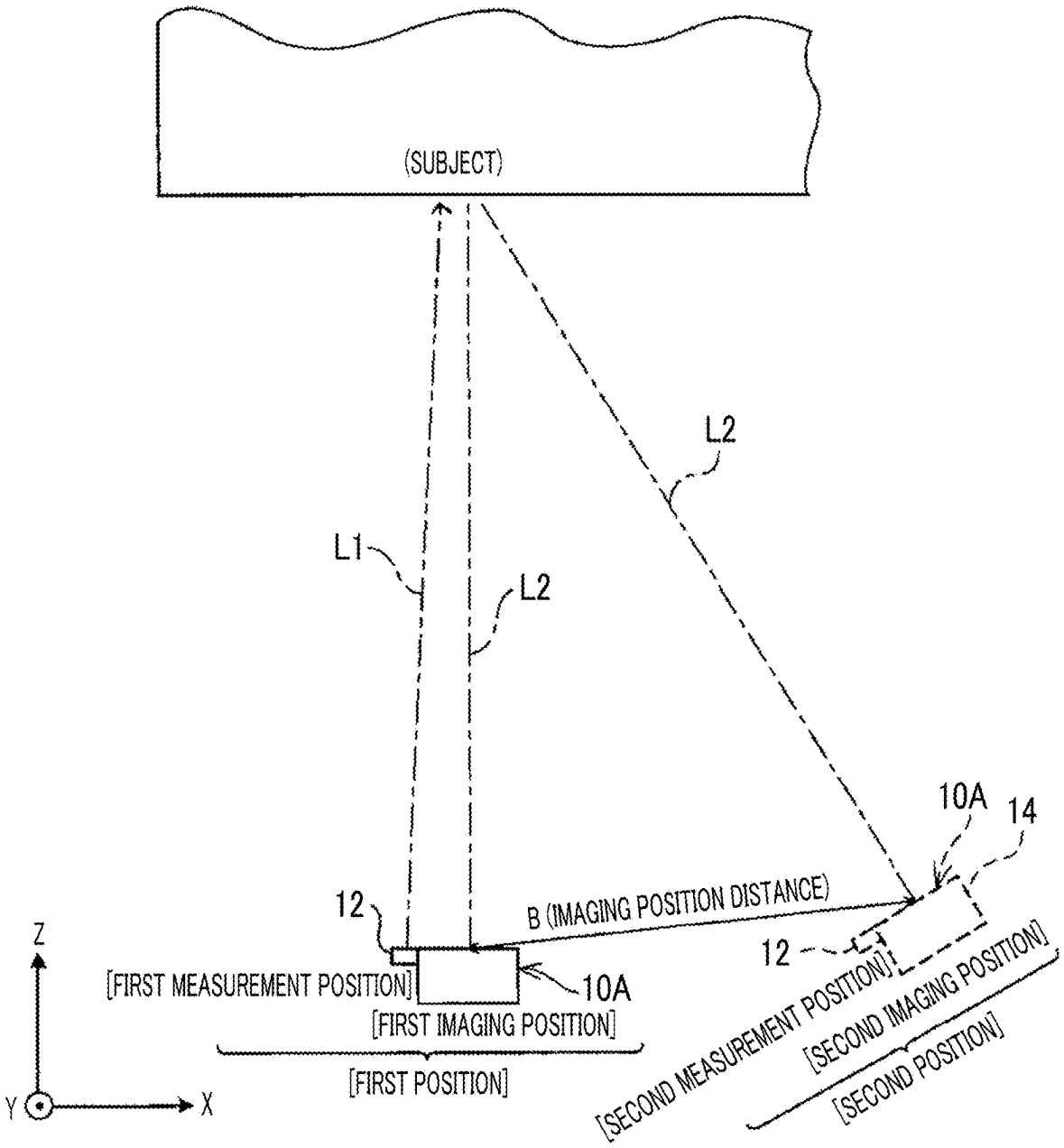
(SUBJECT)
L2
L1
L2
10A
14
12
B (IMAGING POSITION DISTANCE)
12
Z
[FIRST MEASUREMENT POSITION]
10A
[FIRST IMAGING POSITION]
[FIRST POSITION]
[SECOND MEASUREMENT POSITION]
[SECOND IMAGING POSITION]
[SECOND POSITION]
Y
X

FIG. 8

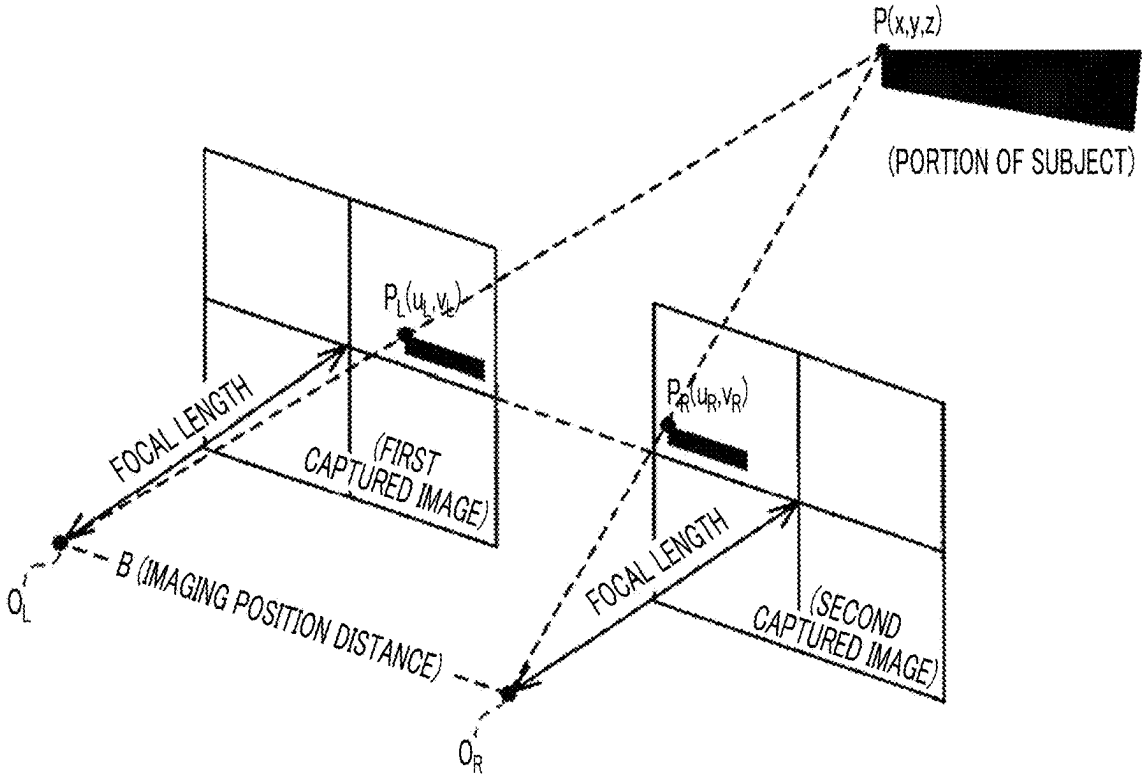
P(x,y,z)
(PORTION OF SUBJECT)
$P_L(u_L,v_L)$
$P_R(u_R,v_R)$
FOCAL LENGTH
(FIRST CAPTURED IMAGE)
FOCAL LENGTH
(SECOND CAPTURED IMAGE)
O_L
B (IMAGING POSITION DISTANCE)
O_R

FIG. 9

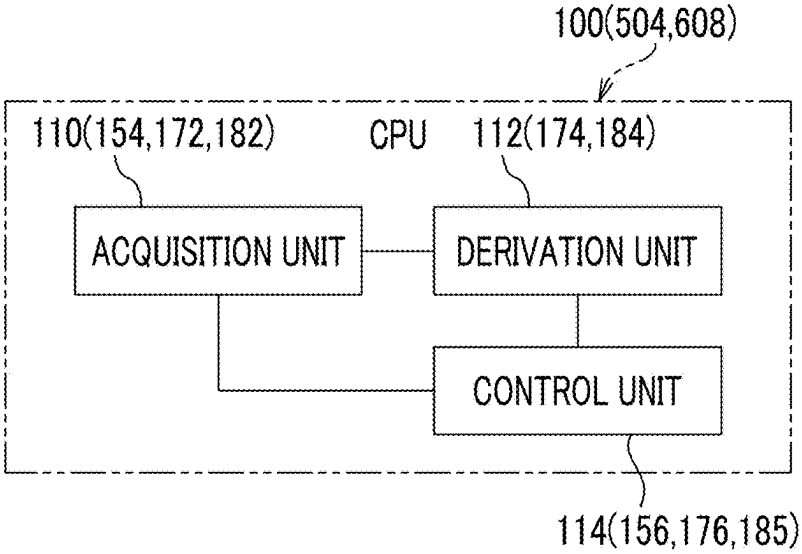
100(504,608)
110(154,172,182)
CPU
112(174,184)
ACQUISITION UNIT
DERIVATION UNIT
CONTROL UNIT
114(156,176,185)

FIG. 10

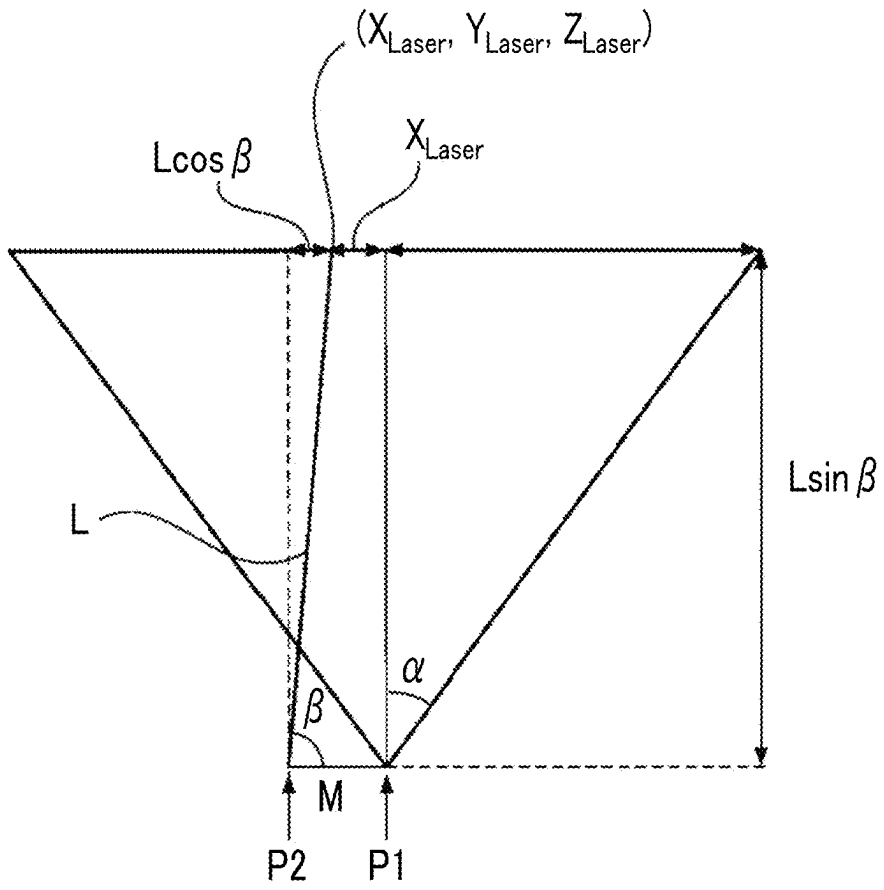
$(X_{Laser}, Y_{Laser}, Z_{Laser})$
X_{Laser}
$L\cos\beta$
$L\sin\beta$
L
α
β
M
P2
P1

FIG. 11

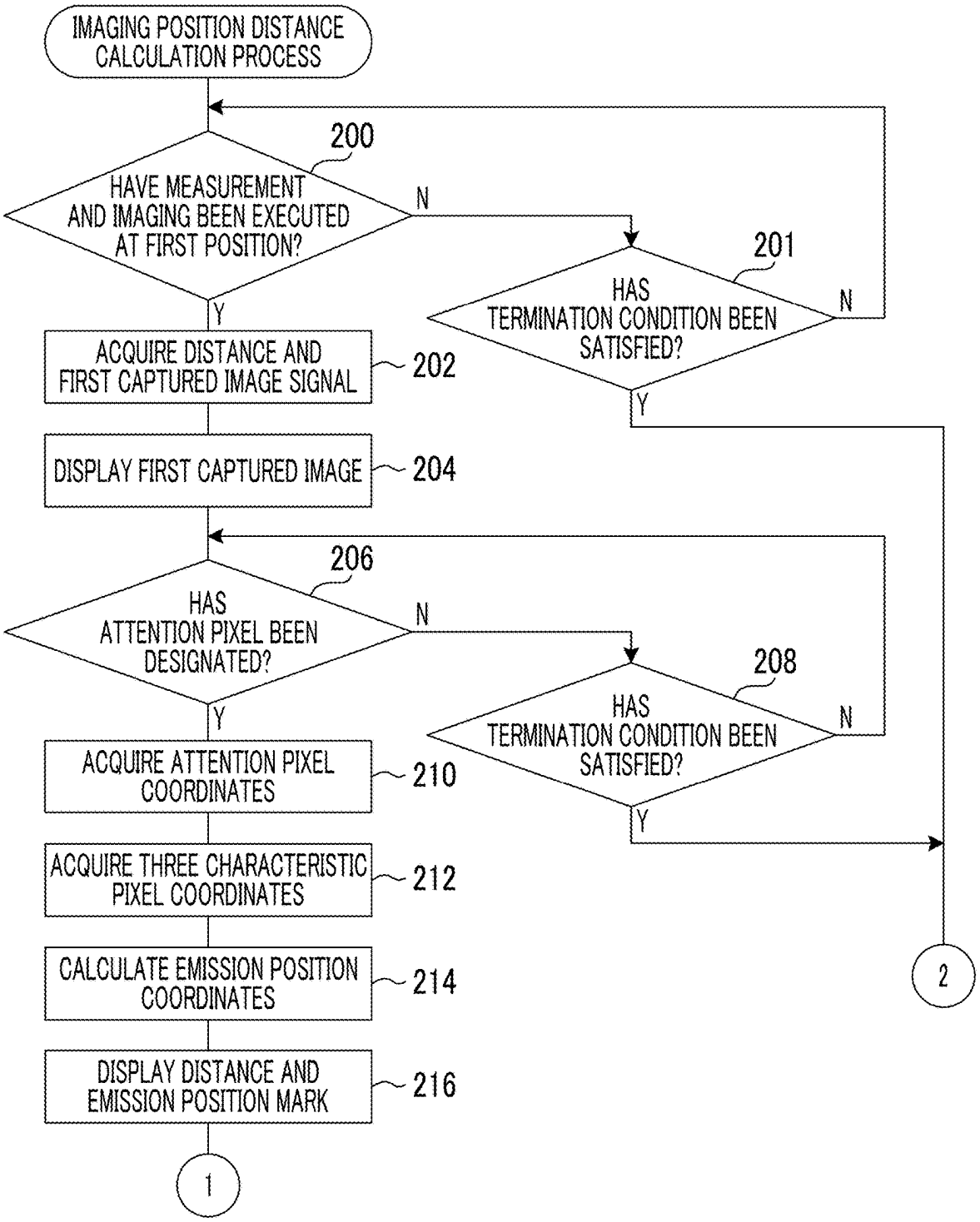
IMAGING POSITION DISTANCE CALCULATION PROCESS
200
HAVE MEASUREMENT AND IMAGING BEEN EXECUTED AT FIRST POSITION?
N
Y
201
HAS TERMINATION CONDITION BEEN SATISFIED?
N
Y
ACQUIRE DISTANCE AND FIRST CAPTURED IMAGE SIGNAL
202
DISPLAY FIRST CAPTURED IMAGE
204
206
HAS ATTENTION PIXEL BEEN DESIGNATED?
N
Y
208
HAS TERMINATION CONDITION BEEN SATISFIED?
N
Y
ACQUIRE ATTENTION PIXEL COORDINATES
210
ACQUIRE THREE CHARACTERISTIC PIXEL COORDINATES
212
CALCULATE EMISSION POSITION COORDINATES
214
DISPLAY DISTANCE AND EMISSION POSITION MARK
216
1
2

FIG. 12

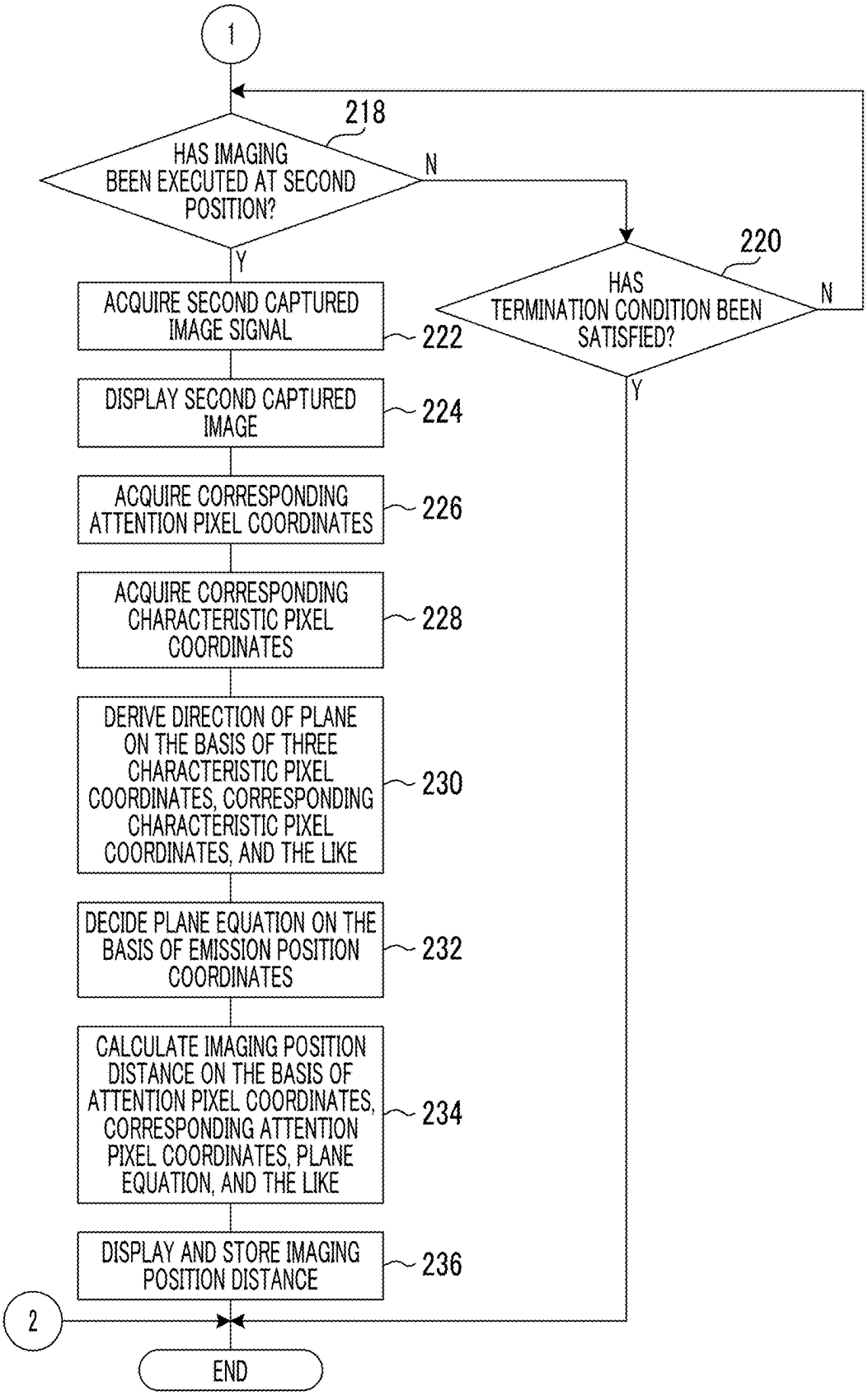
1
218
HAS IMAGING BEEN EXECUTED AT SECOND POSITION?
N
Y
220
HAS TERMINATION CONDITION BEEN SATISFIED?
N
Y
ACQUIRE SECOND CAPTURED IMAGE SIGNAL
222
DISPLAY SECOND CAPTURED IMAGE
224
ACQUIRE CORRESPONDING ATTENTION PIXEL COORDINATES
226
ACQUIRE CORRESPONDING CHARACTERISTIC PIXEL COORDINATES
228
DERIVE DIRECTION OF PLANE ON THE BASIS OF THREE CHARACTERISTIC PIXEL COORDINATES, CORRESPONDING CHARACTERISTIC PIXEL COORDINATES, AND THE LIKE
230
DECIDE PLANE EQUATION ON THE BASIS OF EMISSION POSITION COORDINATES
232
CALCULATE IMAGING POSITION DISTANCE ON THE BASIS OF ATTENTION PIXEL COORDINATES, CORRESPONDING ATTENTION PIXEL COORDINATES, PLANE EQUATION, AND THE LIKE
234
DISPLAY AND STORE IMAGING POSITION DISTANCE
236
2
END

FIG. 13

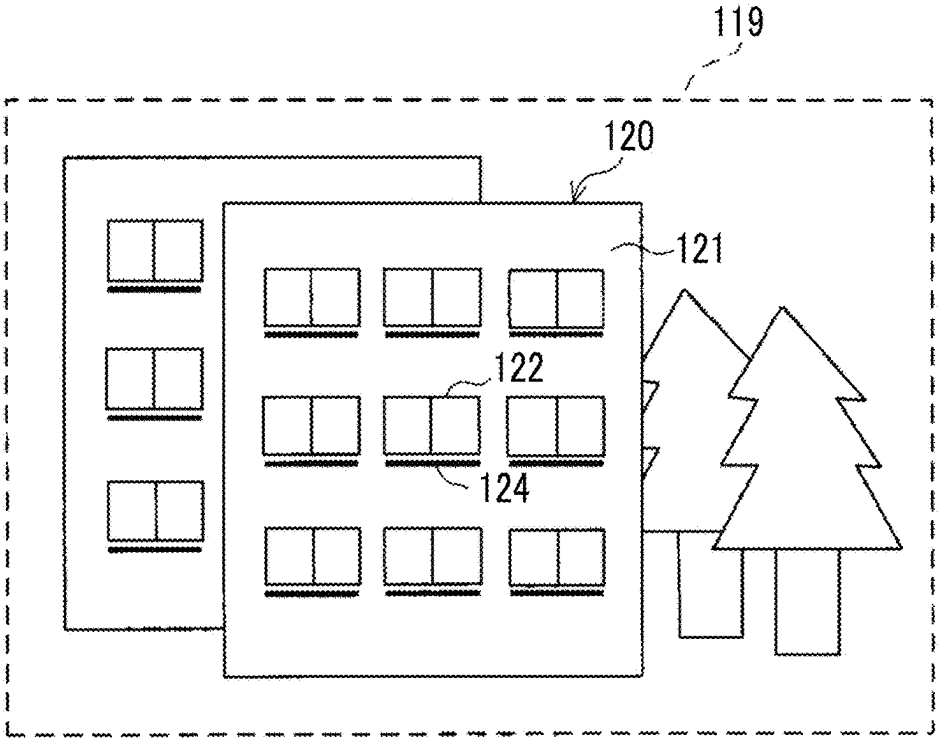

FIG. 14

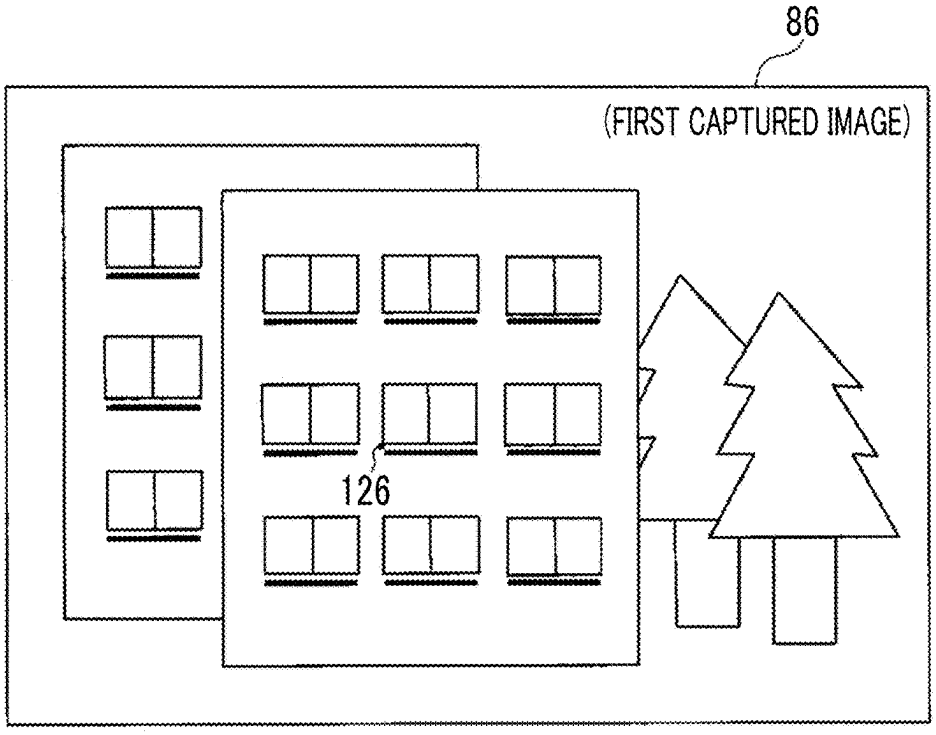

FIG. 15

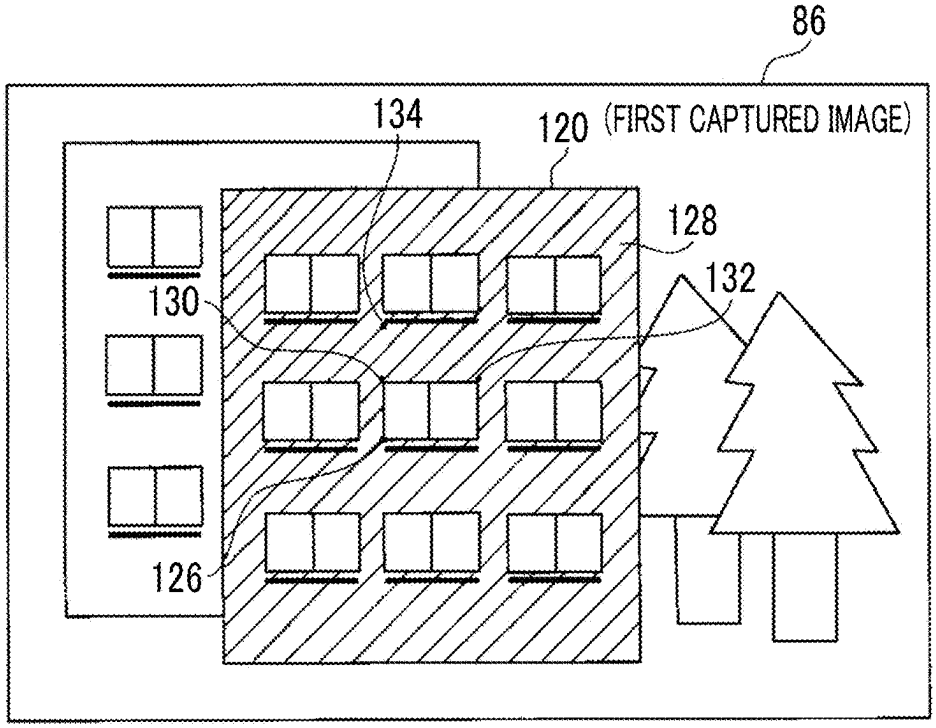
86
134
120
(FIRST CAPTURED IMAGE)
128
132
130
126

FIG. 16

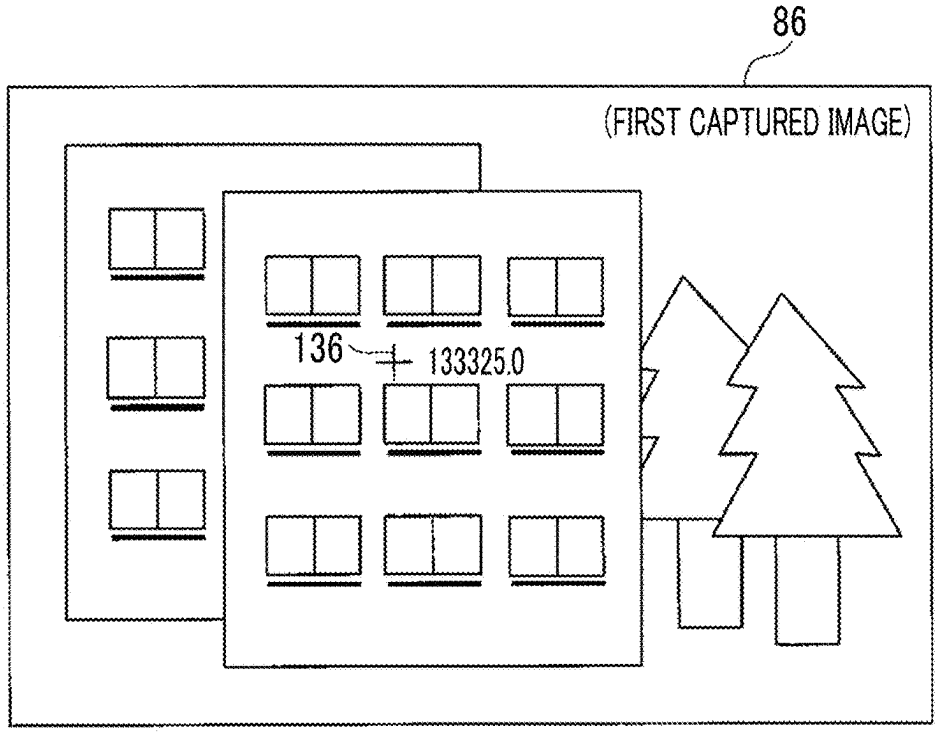
86
(FIRST CAPTURED IMAGE)
136
133325.0

FIG. 17

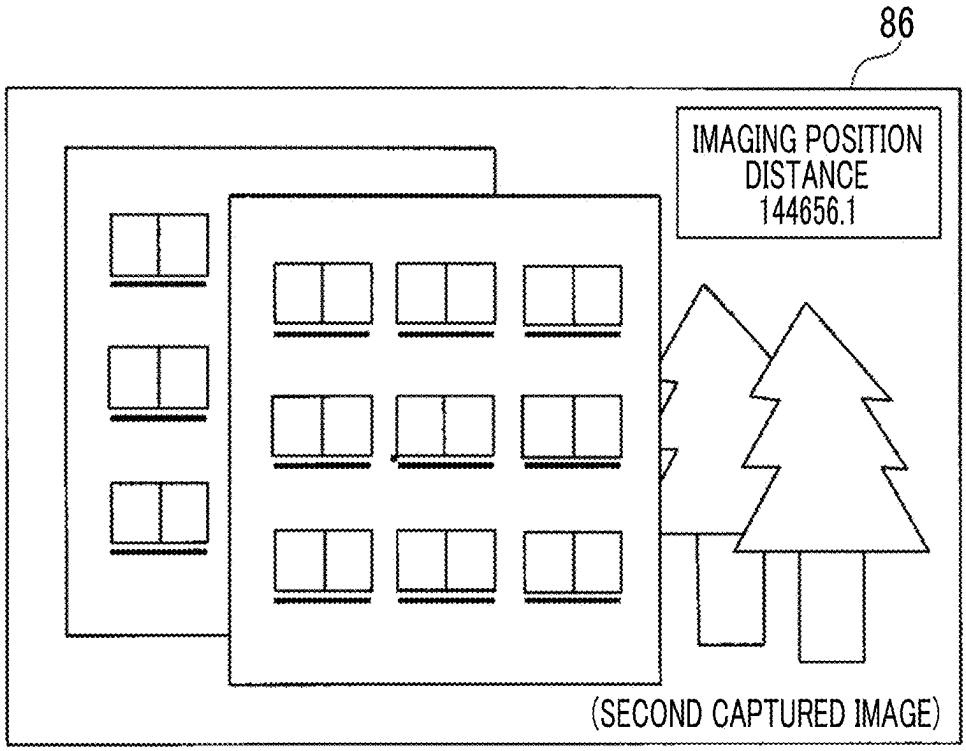
86
IMAGING POSITION
DISTANCE
144656.1
(SECOND CAPTURED IMAGE)

FIG. 18

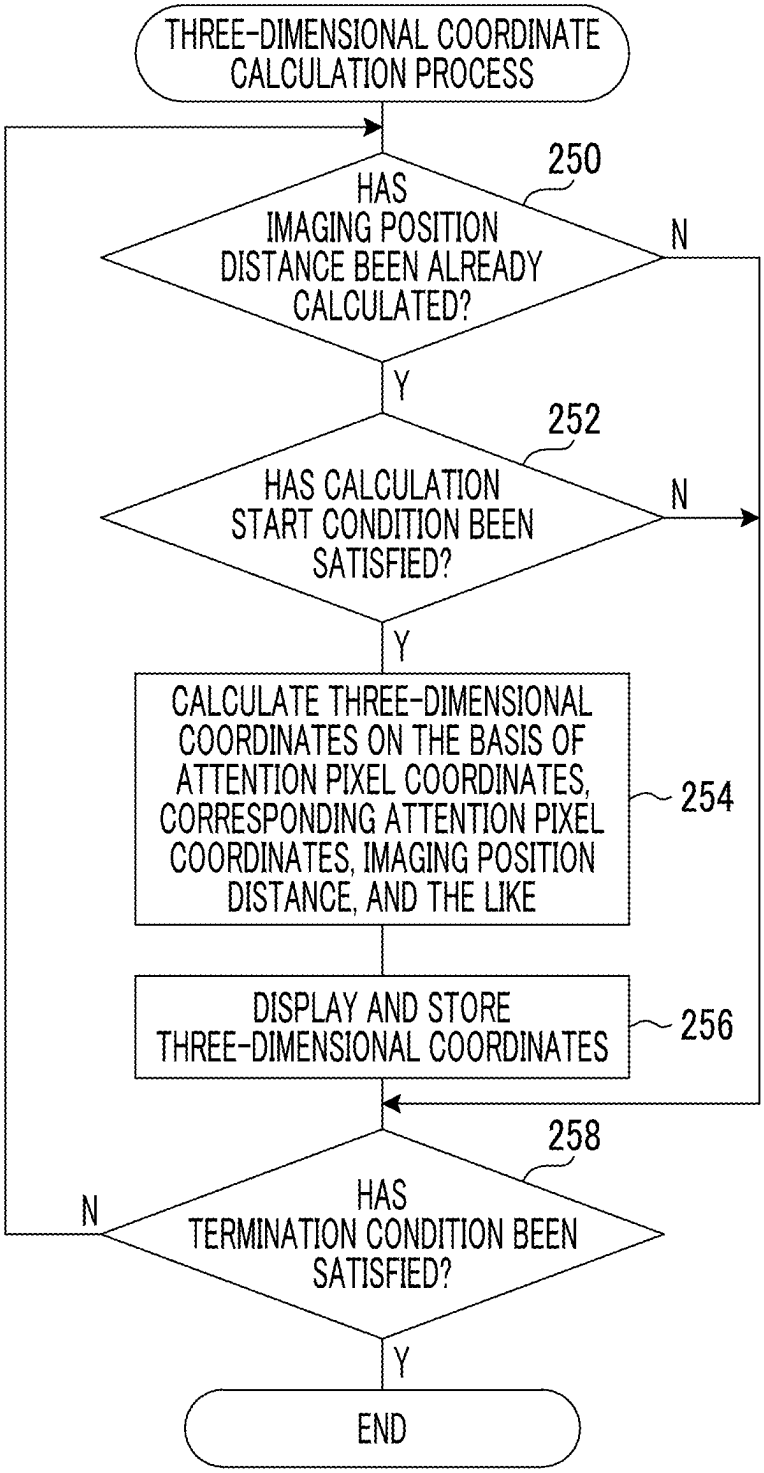
THREE-DIMENSIONAL COORDINATE CALCULATION PROCESS
250
HAS IMAGING POSITION DISTANCE BEEN ALREADY CALCULATED?
N
Y
252
HAS CALCULATION START CONDITION BEEN SATISFIED?
N
Y
CALCULATE THREE-DIMENSIONAL COORDINATES ON THE BASIS OF ATTENTION PIXEL COORDINATES, CORRESPONDING ATTENTION PIXEL COORDINATES, IMAGING POSITION DISTANCE, AND THE LIKE
254
DISPLAY AND STORE THREE-DIMENSIONAL COORDINATES
256
258
HAS TERMINATION CONDITION BEEN SATISFIED?
N
Y
END

FIG. 19

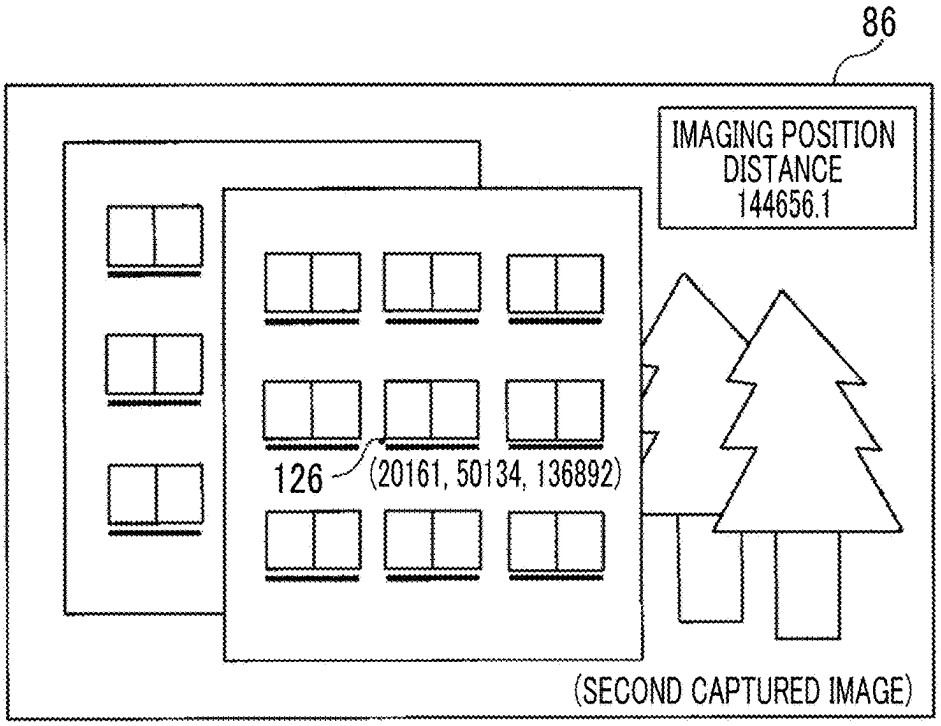
86
IMAGING POSITION
DISTANCE
144656.1
126
(20161, 50134, 136892)
(SECOND CAPTURED IMAGE)

FIG. 20

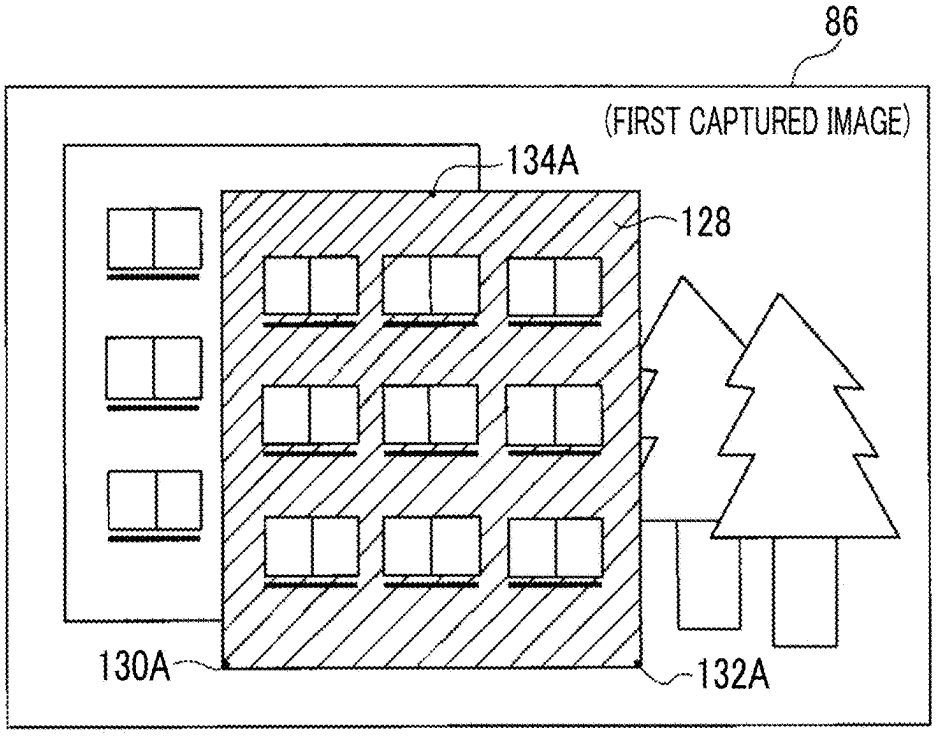
86
(FIRST CAPTURED IMAGE)
134A
128
130A
132A

FIG. 21

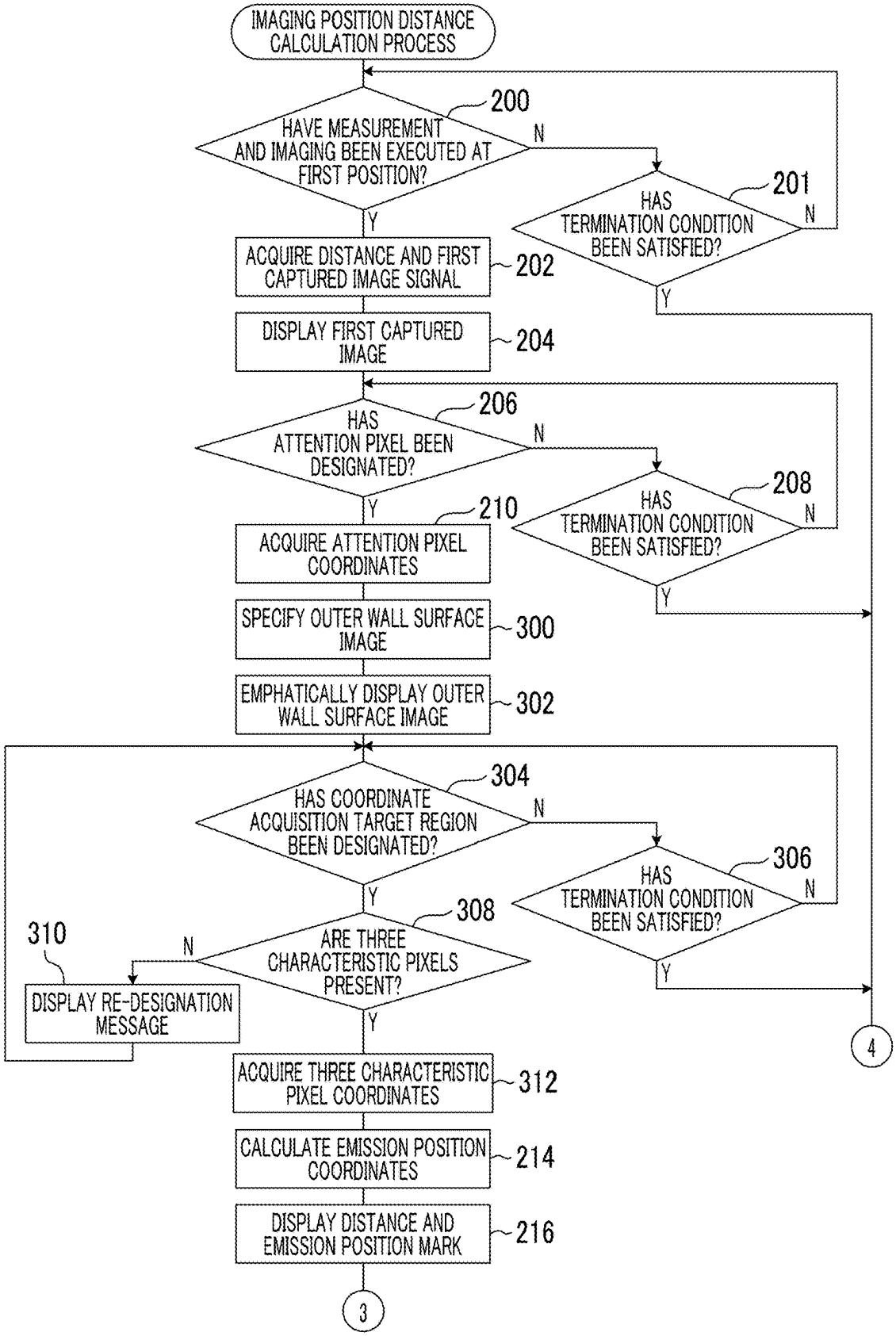
IMAGING POSITION DISTANCE CALCULATION PROCESS
200
HAVE MEASUREMENT AND IMAGING BEEN EXECUTED AT FIRST POSITION?
N
Y
201
HAS TERMINATION CONDITION BEEN SATISFIED?
N
Y
ACQUIRE DISTANCE AND FIRST CAPTURED IMAGE SIGNAL
202
DISPLAY FIRST CAPTURED IMAGE
204
206
HAS ATTENTION PIXEL BEEN DESIGNATED?
N
Y
208
HAS TERMINATION CONDITION BEEN SATISFIED?
N
Y
210
ACQUIRE ATTENTION PIXEL COORDINATES
SPECIFY OUTER WALL SURFACE IMAGE
300
EMPHATICALLY DISPLAY OUTER WALL SURFACE IMAGE
302
304
HAS COORDINATE ACQUISITION TARGET REGION BEEN DESIGNATED?
N
Y
306
HAS TERMINATION CONDITION BEEN SATISFIED?
N
Y
308
ARE THREE CHARACTERISTIC PIXELS PRESENT?
N
Y
310
DISPLAY RE-DESIGNATION MESSAGE
4
ACQUIRE THREE CHARACTERISTIC PIXEL COORDINATES
312
CALCULATE EMISSION POSITION COORDINATES
214
DISPLAY DISTANCE AND EMISSION POSITION MARK
216
3

FIG. 22

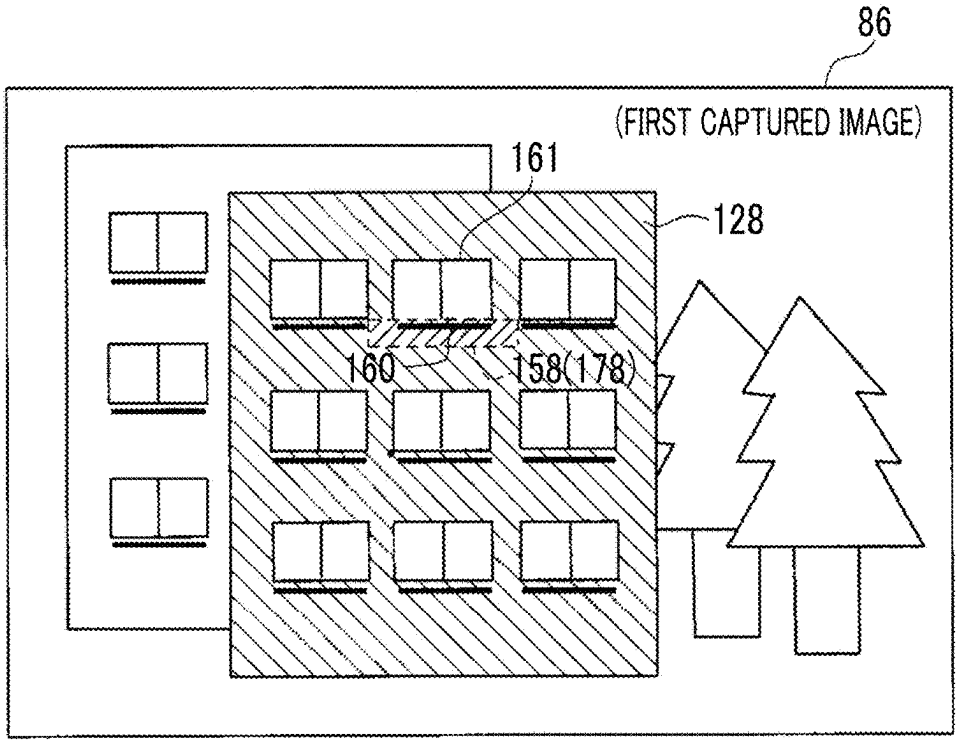
86
(FIRST CAPTURED IMAGE)
161
128
160
158(178)

FIG. 23

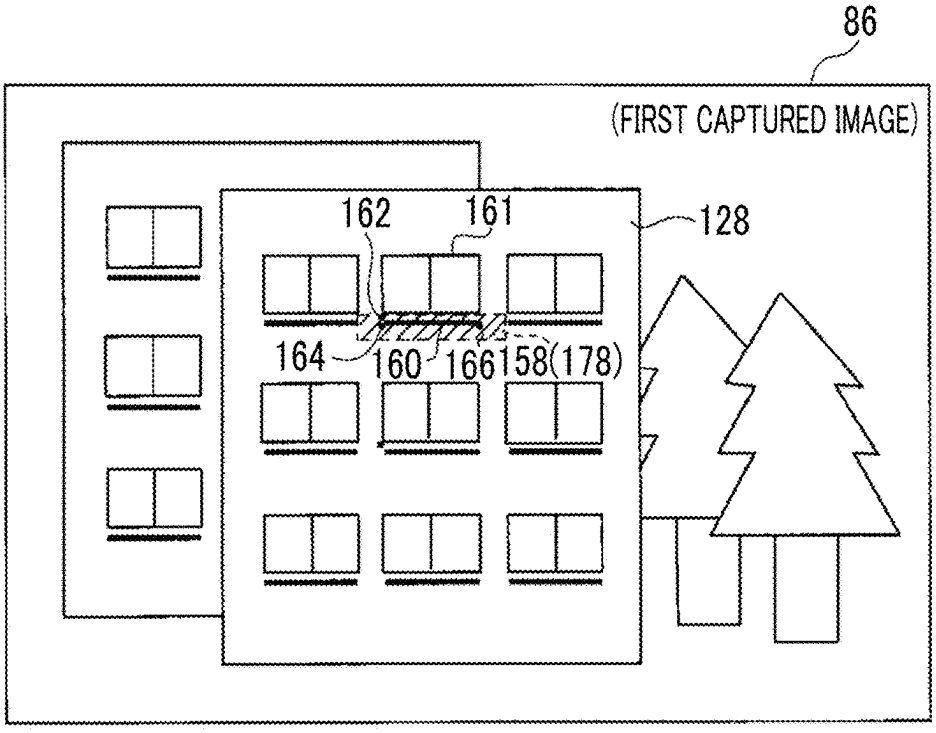
86
(FIRST CAPTURED IMAGE)
162
161
128
164
160
166
158(178)

FIG. 24

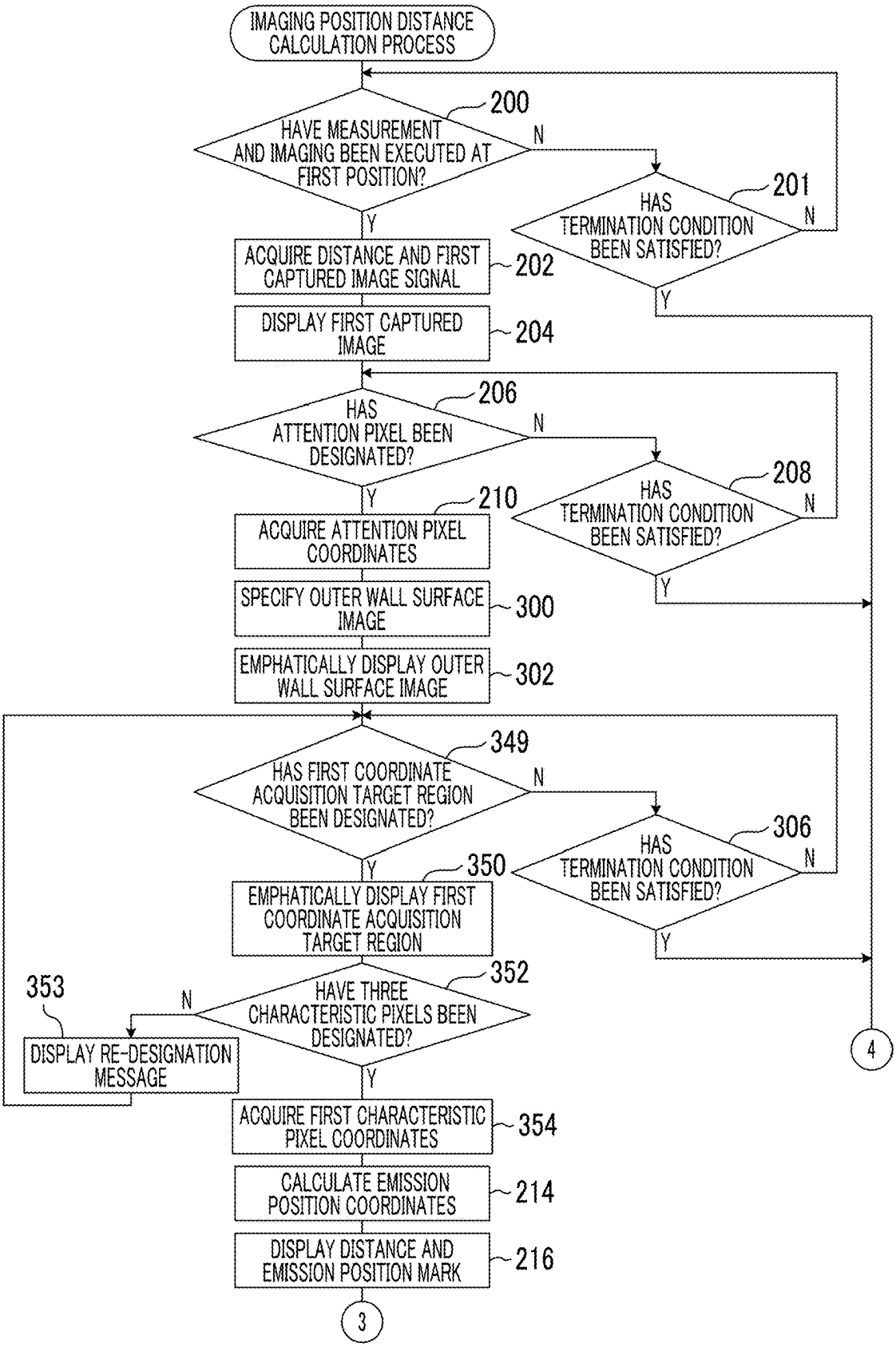
IMAGING POSITION DISTANCE CALCULATION PROCESS
HAVE MEASUREMENT AND IMAGING BEEN EXECUTED AT FIRST POSITION?
200
N
Y
HAS TERMINATION CONDITION BEEN SATISFIED?
201
N
Y
ACQUIRE DISTANCE AND FIRST CAPTURED IMAGE SIGNAL
202
DISPLAY FIRST CAPTURED IMAGE
204
HAS ATTENTION PIXEL BEEN DESIGNATED?
206
N
Y
HAS TERMINATION CONDITION BEEN SATISFIED?
208
N
Y
ACQUIRE ATTENTION PIXEL COORDINATES
210
SPECIFY OUTER WALL SURFACE IMAGE
300
EMPHATICALLY DISPLAY OUTER WALL SURFACE IMAGE
302
HAS FIRST COORDINATE ACQUISITION TARGET REGION BEEN DESIGNATED?
349
N
Y
HAS TERMINATION CONDITION BEEN SATISFIED?
306
N
Y
EMPHATICALLY DISPLAY FIRST COORDINATE ACQUISITION TARGET REGION
350
HAVE THREE CHARACTERISTIC PIXELS BEEN DESIGNATED?
352
N
Y
DISPLAY RE-DESIGNATION MESSAGE
353
4
ACQUIRE FIRST CHARACTERISTIC PIXEL COORDINATES
354
CALCULATE EMISSION POSITION COORDINATES
214
DISPLAY DISTANCE AND EMISSION POSITION MARK
216
3

FIG. 25

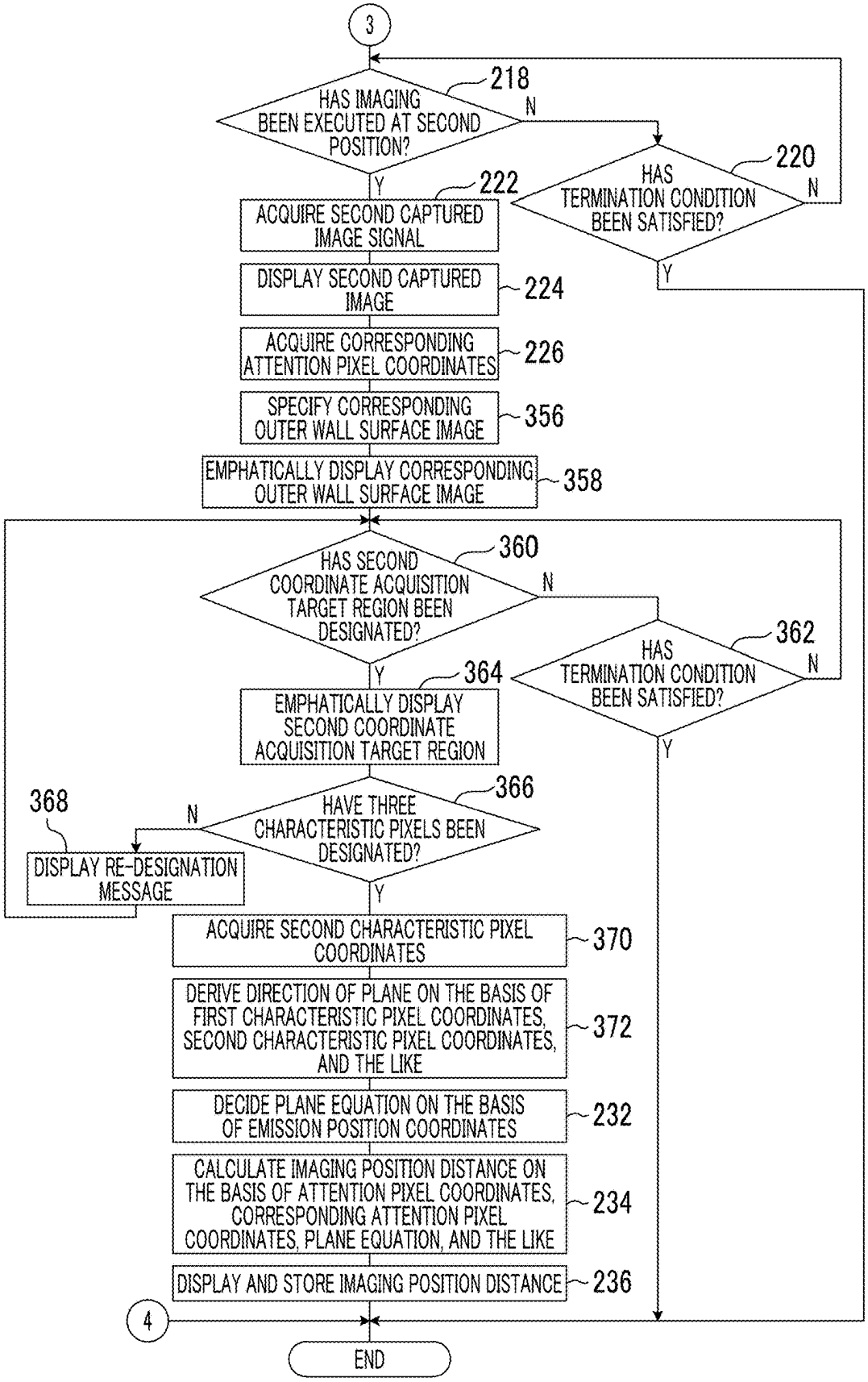
3
HAS IMAGING BEEN EXECUTED AT SECOND POSITION?
218
N
Y
HAS TERMINATION CONDITION BEEN SATISFIED?
220
N
Y
ACQUIRE SECOND CAPTURED IMAGE SIGNAL
222
DISPLAY SECOND CAPTURED IMAGE
224
ACQUIRE CORRESPONDING ATTENTION PIXEL COORDINATES
226
SPECIFY CORRESPONDING OUTER WALL SURFACE IMAGE
356
EMPHATICALLY DISPLAY CORRESPONDING OUTER WALL SURFACE IMAGE
358
HAS SECOND COORDINATE ACQUISITION TARGET REGION BEEN DESIGNATED?
360
N
Y
HAS TERMINATION CONDITION BEEN SATISFIED?
362
N
Y
EMPHATICALLY DISPLAY SECOND COORDINATE ACQUISITION TARGET REGION
364
HAVE THREE CHARACTERISTIC PIXELS BEEN DESIGNATED?
366
N
Y
368
DISPLAY RE-DESIGNATION MESSAGE
ACQUIRE SECOND CHARACTERISTIC PIXEL COORDINATES
370
DERIVE DIRECTION OF PLANE ON THE BASIS OF FIRST CHARACTERISTIC PIXEL COORDINATES, SECOND CHARACTERISTIC PIXEL COORDINATES, AND THE LIKE
372
DECIDE PLANE EQUATION ON THE BASIS OF EMISSION POSITION COORDINATES
232
CALCULATE IMAGING POSITION DISTANCE ON THE BASIS OF ATTENTION PIXEL COORDINATES, CORRESPONDING ATTENTION PIXEL COORDINATES, PLANE EQUATION, AND THE LIKE
234
DISPLAY AND STORE IMAGING POSITION DISTANCE
236
4
END

FIG. 26

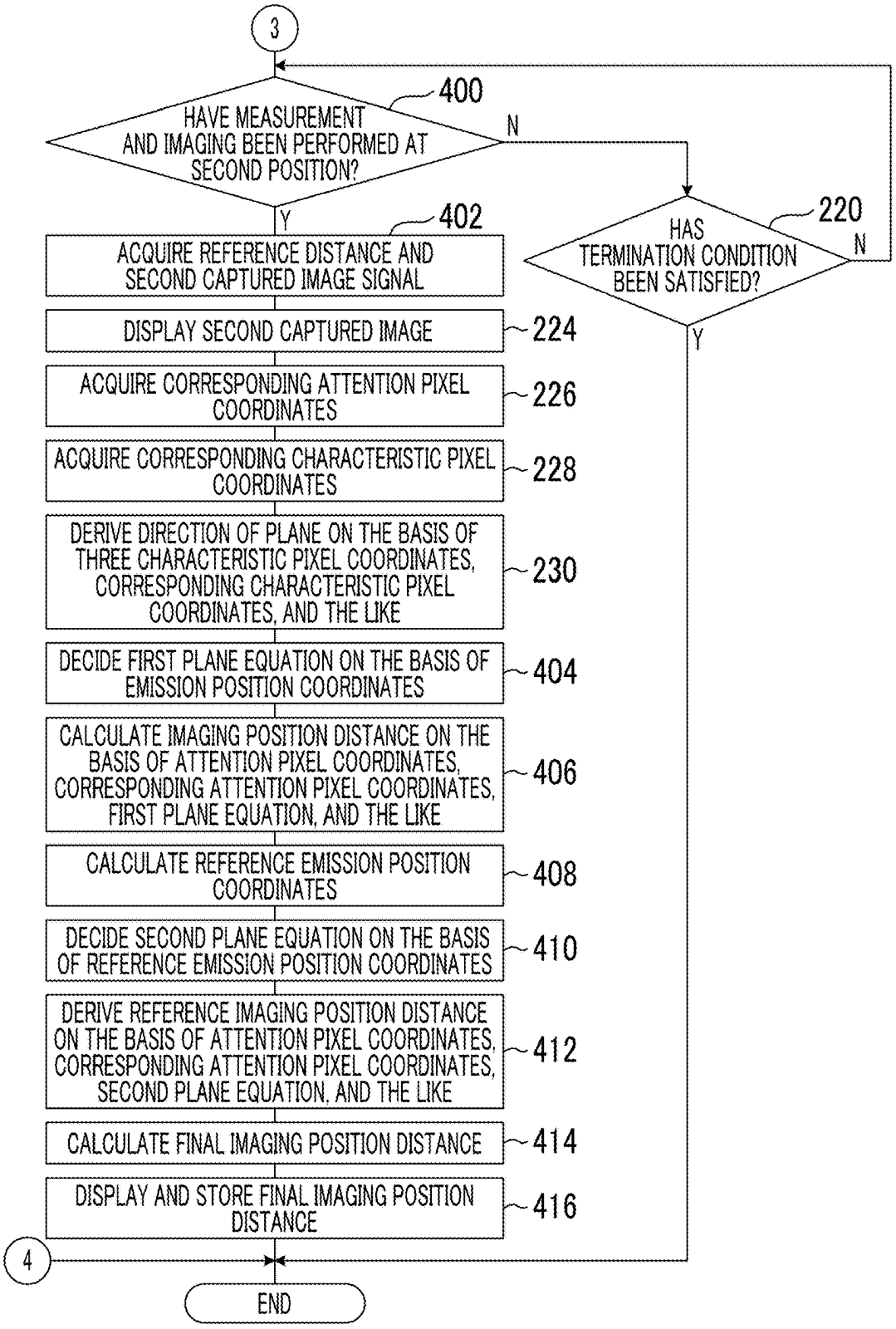
3
HAVE MEASUREMENT AND IMAGING BEEN PERFORMED AT SECOND POSITION?
400
N
Y
HAS TERMINATION CONDITION BEEN SATISFIED?
220
N
Y
ACQUIRE REFERENCE DISTANCE AND SECOND CAPTURED IMAGE SIGNAL
402
DISPLAY SECOND CAPTURED IMAGE
224
ACQUIRE CORRESPONDING ATTENTION PIXEL COORDINATES
226
ACQUIRE CORRESPONDING CHARACTERISTIC PIXEL COORDINATES
228
DERIVE DIRECTION OF PLANE ON THE BASIS OF THREE CHARACTERISTIC PIXEL COORDINATES, CORRESPONDING CHARACTERISTIC PIXEL COORDINATES, AND THE LIKE
230
DECIDE FIRST PLANE EQUATION ON THE BASIS OF EMISSION POSITION COORDINATES
404
CALCULATE IMAGING POSITION DISTANCE ON THE BASIS OF ATTENTION PIXEL COORDINATES, CORRESPONDING ATTENTION PIXEL COORDINATES, FIRST PLANE EQUATION, AND THE LIKE
406
CALCULATE REFERENCE EMISSION POSITION COORDINATES
408
DECIDE SECOND PLANE EQUATION ON THE BASIS OF REFERENCE EMISSION POSITION COORDINATES
410
DERIVE REFERENCE IMAGING POSITION DISTANCE ON THE BASIS OF ATTENTION PIXEL COORDINATES, CORRESPONDING ATTENTION PIXEL COORDINATES, SECOND PLANE EQUATION, AND THE LIKE
412
CALCULATE FINAL IMAGING POSITION DISTANCE
414
DISPLAY AND STORE FINAL IMAGING POSITION DISTANCE
416
4
END

FIG. 27

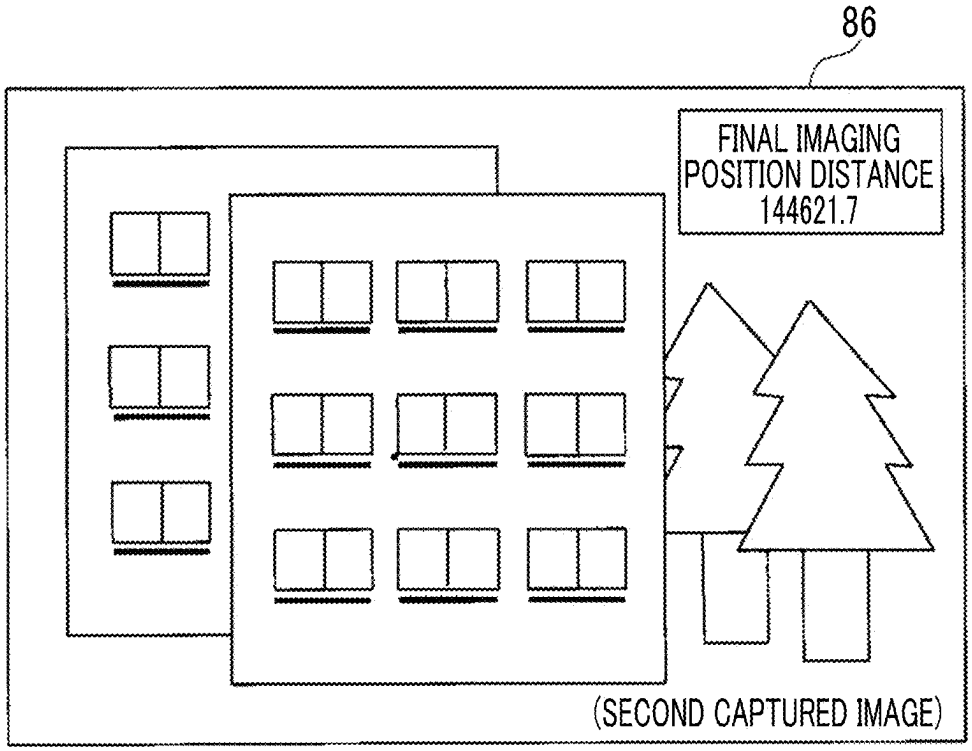
86
FINAL IMAGING POSITION DISTANCE 144621.7
(SECOND CAPTURED IMAGE)

FIG. 28

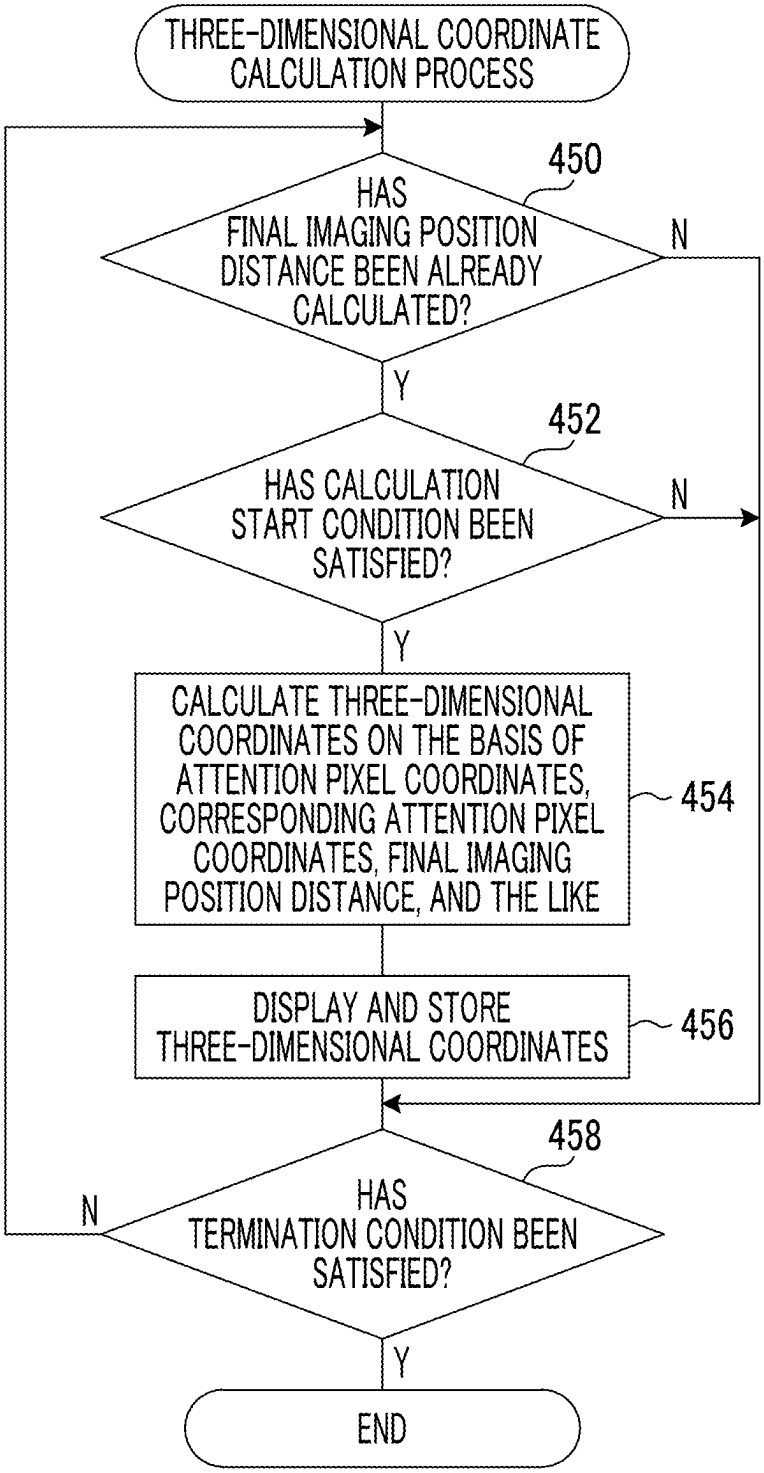
THREE-DIMENSIONAL COORDINATE CALCULATION PROCESS
450
HAS FINAL IMAGING POSITION DISTANCE BEEN ALREADY CALCULATED?
N
Y
452
HAS CALCULATION START CONDITION BEEN SATISFIED?
N
Y
CALCULATE THREE-DIMENSIONAL COORDINATES ON THE BASIS OF ATTENTION PIXEL COORDINATES, CORRESPONDING ATTENTION PIXEL COORDINATES, FINAL IMAGING POSITION DISTANCE, AND THE LIKE
454
DISPLAY AND STORE THREE-DIMENSIONAL COORDINATES
456
458
HAS TERMINATION CONDITION BEEN SATISFIED?
N
Y
END

FIG. 29

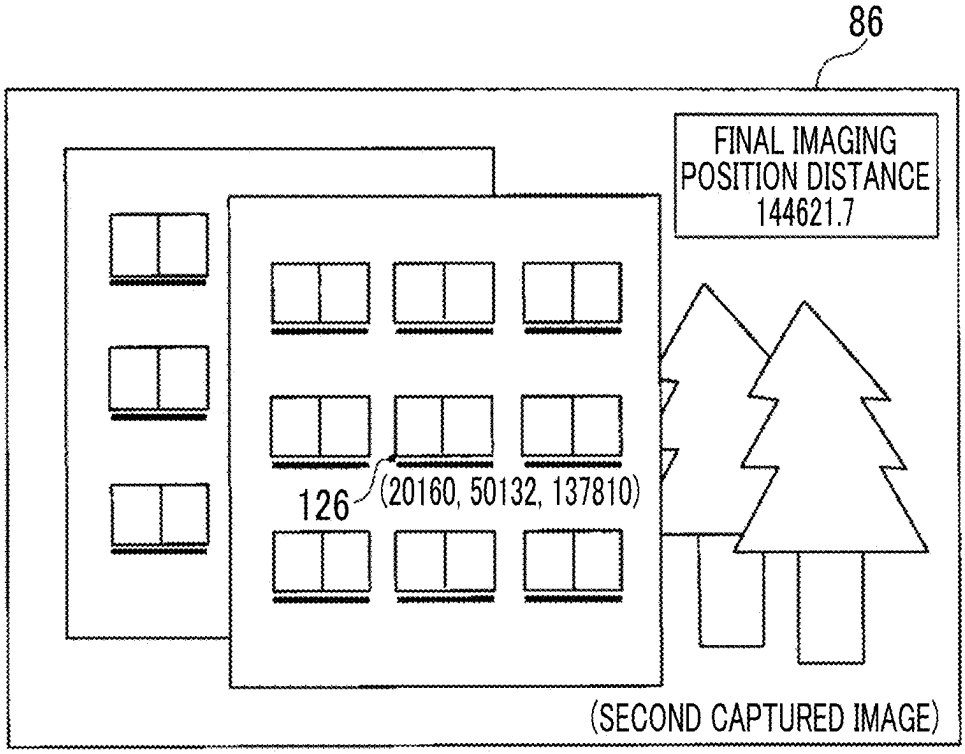
86
FINAL IMAGING POSITION DISTANCE 144621.7
126
(20160, 50132, 137810)
(SECOND CAPTURED IMAGE)

FIG. 30

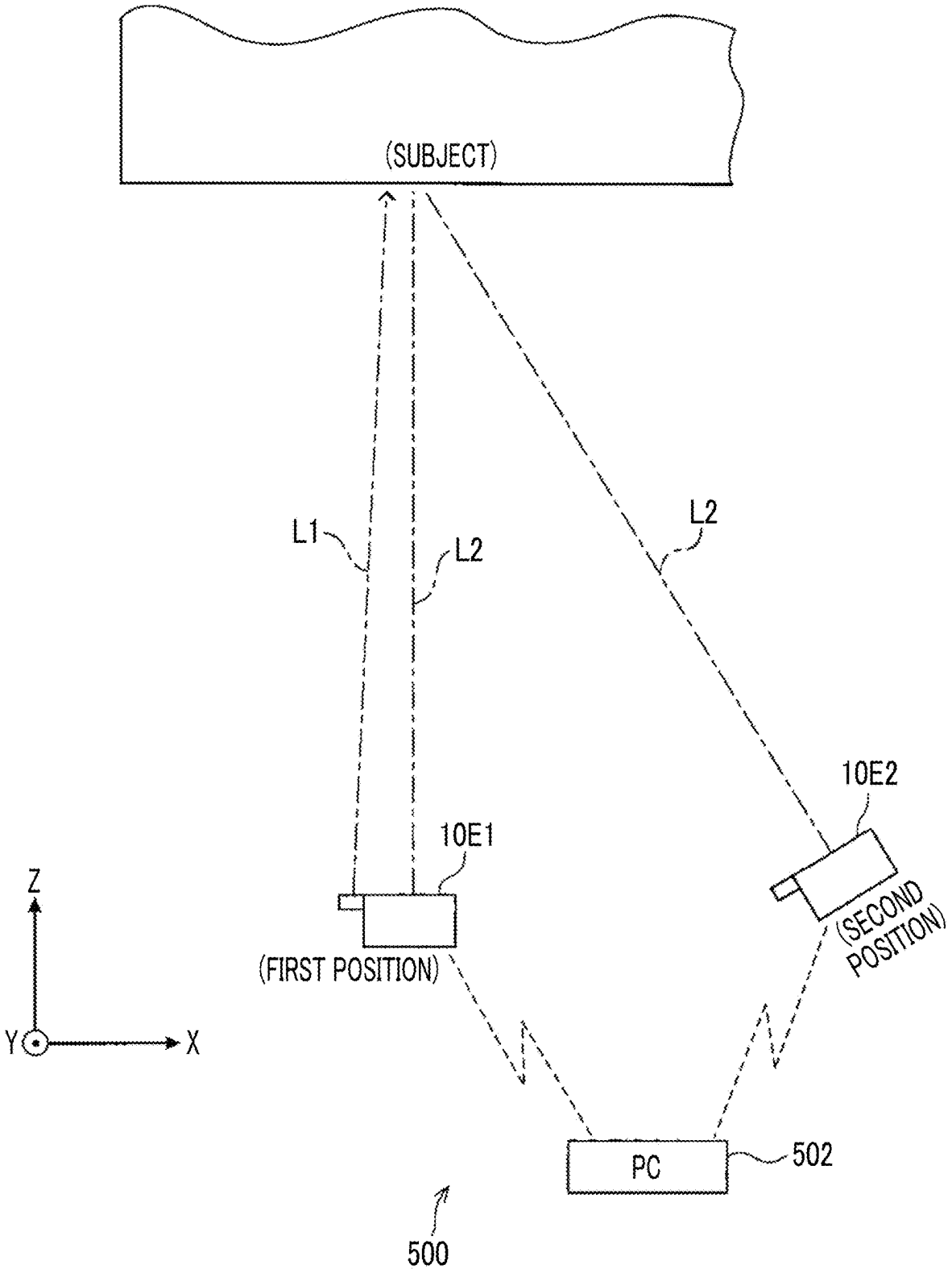
(SUBJECT)
L1
L2
L2
10E1
10E2
(FIRST POSITION)
(SECOND POSITION)
Z
Y
X
PC
502
500

FIG. 31

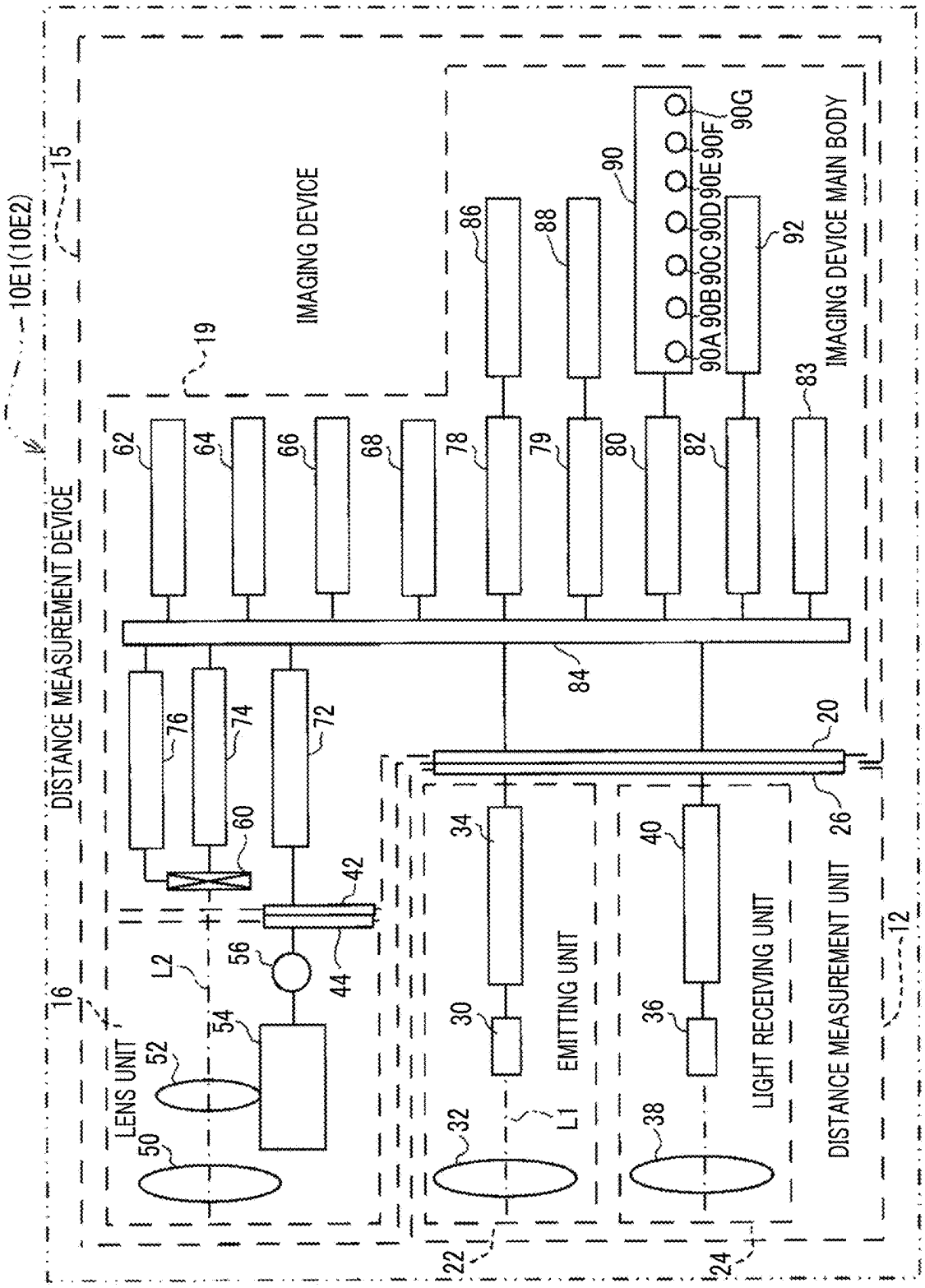
10E1(10E2)
15
DISTANCE MEASUREMENT DEVICE
IMAGING DEVICE
19
IMAGING DEVICE MAIN BODY
62
64
66
68
78
79
80
82
83
86
88
90
90A
90B
90C
90D
90E
90F
90G
92
84
76
74
72
60
42
44
56
L2
54
52
50
16
LENS UNIT
34
30
32
L1
EMITTING UNIT
40
36
38
LIGHT RECEIVING UNIT
20
26
12
DISTANCE MEASUREMENT UNIT
22
24

FIG. 32

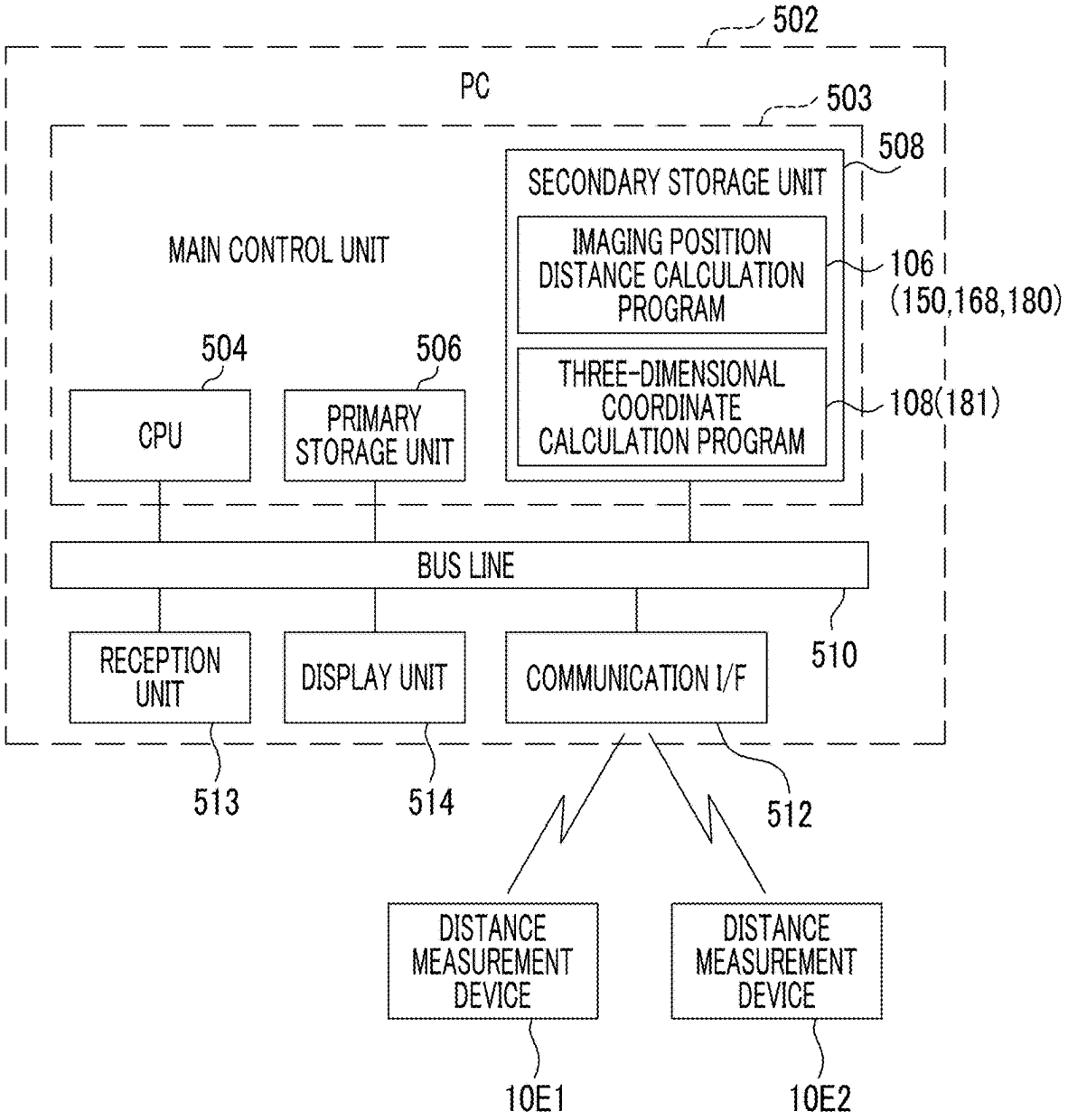
502
PC
503
508
SECONDARY STORAGE UNIT
MAIN CONTROL UNIT
IMAGING POSITION DISTANCE CALCULATION PROGRAM
106 (150,168,180)
504
506
THREE-DIMENSIONAL COORDINATE CALCULATION PROGRAM
108(181)
CPU
PRIMARY STORAGE UNIT
BUS LINE
510
RECEPTION UNIT
DISPLAY UNIT
COMMUNICATION I/F
513
514
512
DISTANCE MEASUREMENT DEVICE
DISTANCE MEASUREMENT DEVICE
10E1
10E2

FIG. 33

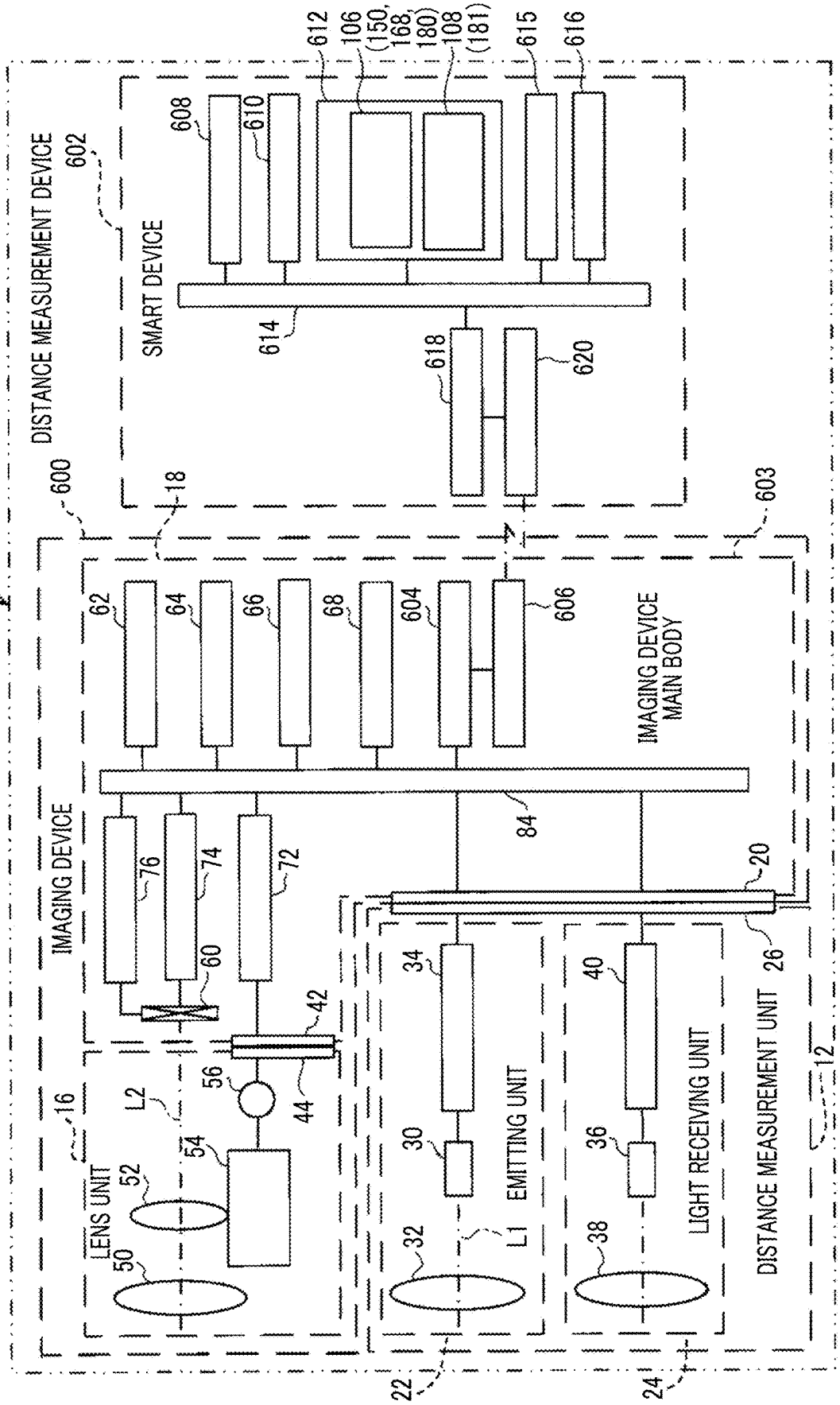
10F
DISTANCE MEASUREMENT DEVICE
602
SMART DEVICE
608
610
612
106
(150,
168,
180)
108
(181)
615
616
614
618
620
600
18
603
62
64
66
68
604
606
IMAGING DEVICE
MAIN BODY
84
IMAGING DEVICE
76
74
72
60
42
44
56
16
L2
54
52
LENS UNIT
50
20
26
34
30
32
L1
EMITTING UNIT
40
36
38
LIGHT RECEIVING UNIT
DISTANCE MEASUREMENT UNIT
12
22
24

FIG. 34

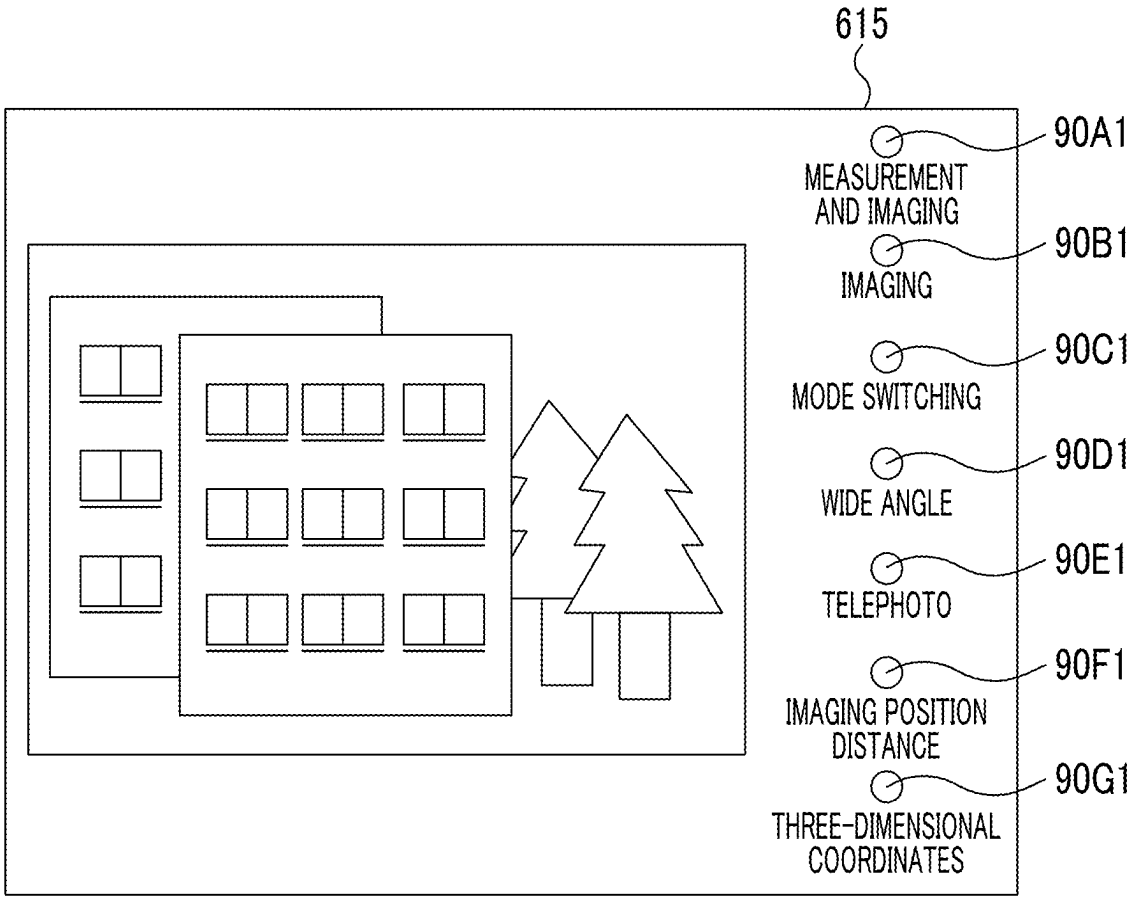
615
90A1
MEASUREMENT AND IMAGING
90B1
IMAGING
90C1
MODE SWITCHING
90D1
WIDE ANGLE
90E1
TELEPHOTO
90F1
IMAGING POSITION DISTANCE
90G1
THREE-DIMENSIONAL COORDINATES

FIG. 35

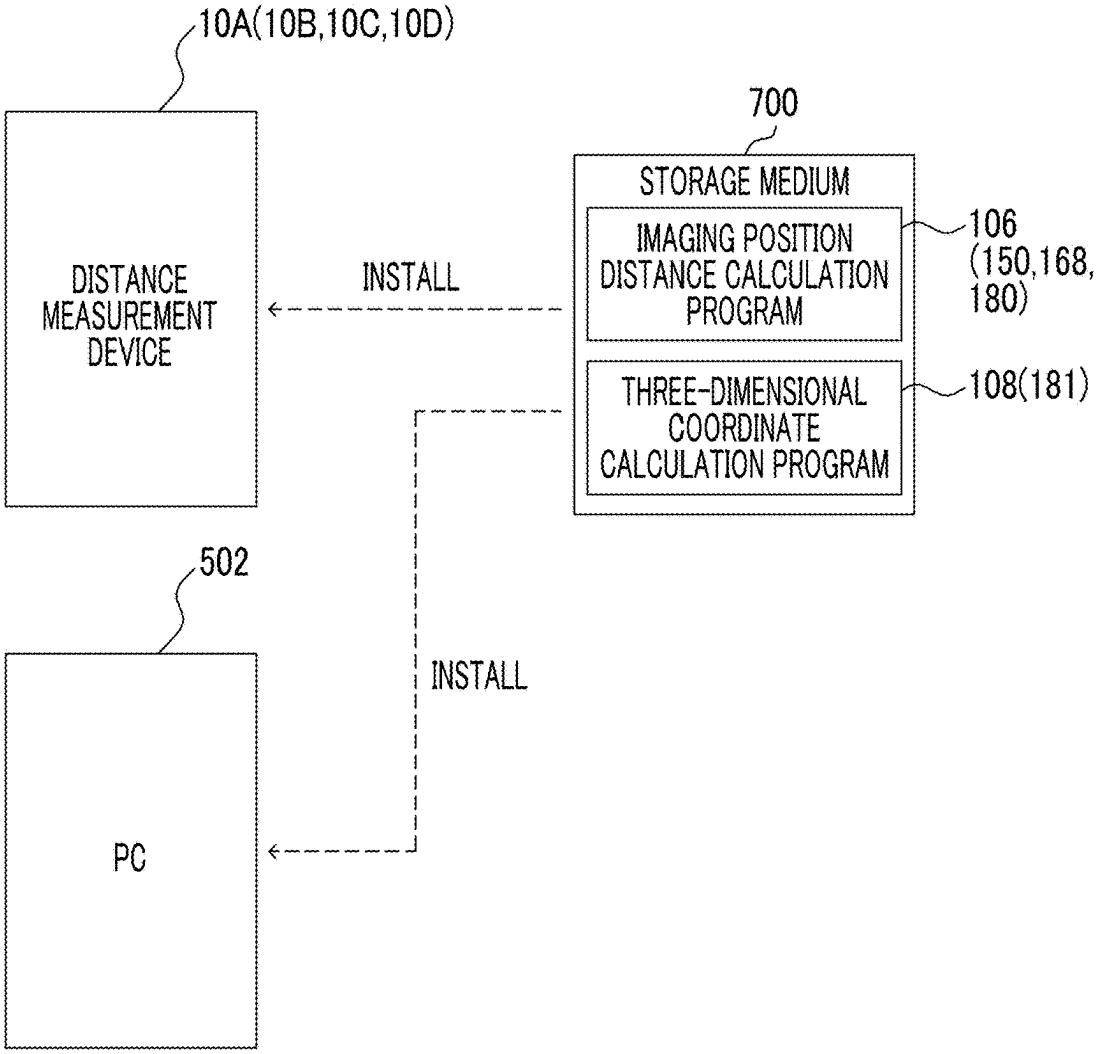
10A(10B,10C,10D)
DISTANCE MEASUREMENT DEVICE
INSTALL
700
STORAGE MEDIUM
IMAGING POSITION DISTANCE CALCULATION PROGRAM
106 (150,168, 180)
THREE-DIMENSIONAL COORDINATE CALCULATION PROGRAM
108(181)
502
INSTALL
PC

FIG. 36

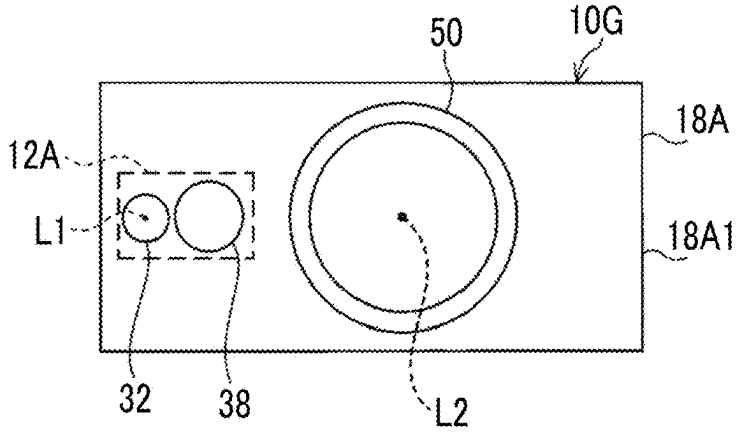
50
10G
18A
12A
L1
18A1
32
38
L2

INFORMATION PROCESSING DEVICE, INFORMATION PROCESSING METHOD, AND PROGRAM

CROSS-REFERENCE TO RELATED APPLICATIONS

[0001] This application is a continuation of U.S. Ser. No. 18/333,156, filed Jun. 12, 2023, which is a continuation of U.S. Ser. No. 17/356,725, filed Jun. 24, 2021, which is a continuation of U.S. Ser. No. 16/705,193, filed Dec. 5, 2019, which is a continuation application of U.S. Ser. No. 15/954,627, filed Apr. 17, 2018, which is a continuation application of International Application No. PCT/JP2016/081597, filed Oct. 25, 2016. Further, this application claims priority from Japanese Patent Application No. 2015-218642, filed Nov. 6, 2015. The entire disclosure of each of the above applications is incorporated herein by reference.

BACKGROUND

1. Technical Field

[0002] The technique of the present disclosure relates to an information processing device, an information processing method, and a program.

2. Related Art

[0003] There has been known a distance measurement device that performs distance measurement on the basis of a reciprocating time of a laser beam emitted by an emitting unit toward a subject assumed to be a distance measurement target by a user (see, for example, JP2012-167944A). Meanwhile, in this specification, the distance measurement refers to measurement of a distance from the distance measurement device to a subject to be measured.

[0004] In addition, as a type of distance measurement device, there is also known a distance measurement device equipped with a three-dimensional coordinate calculation function which is a function of calculating three-dimensional coordinates of a subject.

[0005] As a method for realizing the three-dimensional coordinate calculation function, JP3095463B discloses a three-dimensional measurement method of calculating three-dimensional coordinates of a plurality of measurement points of an object to be measured from image data, which is obtained by imaging using two or more cameras, by a triangulation method.

[0006] The three-dimensional measurement method disclosed in JP3095463B includes the following steps 1 to 5. In step 1, four or more reference point members and reference bars are disposed within fields of view of two or more cameras. In step 2, the reference point members and the reference bars are imaged by the two or more cameras, and angles in the horizontal direction and the vertical direction of the reference point members and the reference bars with respect to an optical axis of each camera are obtained from image data obtained by the imaging. In step 3, a relative positional relationship between the reference point members, the reference bars, and the two or more cameras is obtained from data of the angles of the reference point members and the reference bars.

[0007] In step 4, absolute positions and poses of the two or more cameras are calculated from the obtained relative positional relationship and a distance between two reference bars. In step 5, three-dimensional coordinates of a plurality of measurement points of an object to be measured are calculated from image data, which is obtained by the two or more cameras, by a triangulation method on the basis of the calculated absolute positions and poses of the two or more cameras.

[0008] In addition, as a device for realizing a three-dimensional coordinate calculation function, JP2013-122434A discloses a three-dimensional position measurement device including a monocular imaging device to which irradiation means having an irradiation light source emitting a laser beam is fixed.

[0009] The three-dimensional position measurement device disclosed in JP2013-122434A captures an image of a calibration plate as a subject by moving the calibration plate while irradiating the calibration plate with a laser beam or captures an image of the calibration plate as a subject from two imaging positions by moving an imaging device. In addition, the three-dimensional position measurement device disclosed in JP2013-122434A calculates three-dimensional coordinates of an emission position of a laser beam in each image from the captured images, and calculates a direction vector or a plane equation of the laser beam. The three-dimensional position measurement device disclosed in JP2013-122434A calculates three-dimensional coordinates of an object to be irradiated with a laser beam by using the calculated direction vector or plane equation.

SUMMARY

[0010] However, in the technique disclosed in JP3095463B, it is necessary to use the reference point members and the reference bars, it is not possible to calculate three-dimensional coordinates of a plurality of measurement points of an object to be measured under a situation where it is not possible to use the reference point members and the reference bars.

[0011] In the technique disclosed in JP2013-122434A, the calibration plate has a plurality of characteristic locations, and the characteristic locations of the calibration plate are irradiated with a laser beam. However, in a case where any subject, such as an existing building, is irradiated with a laser beam, it is considered that the subject does not have a characteristic location to be irradiated with a laser beam. In a case where the subject does not have a characteristic location, it is difficult to irradiate the same location with a laser beam from different positions. As a result, in the technique disclosed in JP2013-122434A, it is also difficult to calculate three-dimensional coordinates of an object to be irradiated with a laser beam.

[0012] As another method of calculating three-dimensional coordinates, a method of calculating three-dimensional coordinates on the basis of a first captured image, a second captured image, and an imaging position distance is considered. Here, the first captured image refers to an image obtained by imaging a subject from a first imaging position, and the second captured image refers to an image obtained by imaging the subject from a second imaging position different from the first imaging position. In addition, the imaging position distance refers to a distance between the first imaging position and the second imaging position.

[0013] In a case where three-dimensional coordinates are calculated on the basis of the first captured image, the second captured image, and the imaging position distance, it is necessary to obtain the imaging position distance with a

high level of accuracy. The imaging position distance can be calculated, for example, when distance measurement is performed by using a predetermined location which is a characteristic location capable of being specified and a subject including the predetermined location can be imaged from each of the first imaging position and the second imaging position. The calibration plate makes it possible to provide the predetermined location to a user, but the imaging position distance cannot be calculated in a case where the characteristic location capable of being specified is not irradiated with a laser beam under a situation where the calibration plate cannot be used.

[0014] One embodiment of the invention is contrived in view of such situations, and provides an information processing device, an information processing method, and a program which are capable of deriving an imaging position distance on the basis of captured images obtained by imaging a subject from each of different imaging positions even when a characteristic location capable of being specified is not irradiated with a laser beam.

[0015] An information processing device of a first aspect of the invention includes an acquisition unit that acquires a first captured image obtained by imaging a subject from a first imaging position, a second captured image obtained by imaging the subject from a second imaging position different from the first imaging position, and a distance from one of a position corresponding to the first imaging position and a position corresponding to the second imaging position to the subject, the distance being measured by emitting directional light, which has directivity, to the subject and receiving a reflected light of the directional light, and a derivation unit that derives an imaging position distance which is a distance between the first imaging position and the second imaging position, on the basis of a plurality of pixel coordinates being a plurality of coordinates for satisfying the plurality of pixels of more than three pixels which are present in the same planar region as an emission position irradiated with the directional light on the real space and correspond to the position on the real space in each of the first captured image and the second captured image which are acquired by the acquisition unit, emission position coordinates which specifies the emission position on the real space and are derived on the basis of the distance acquired by the acquisition unit, a focal length of an imaging lens used for the imaging of the subject, and dimensions of imaging pixels included in an imaging pixel group for imaging the subject.

[0016] Therefore, according to the information processing device of the first aspect of the invention, it is possible to derive the imaging position distance on the basis of captured images obtained by imaging the subject from each of different imaging positions even when a characteristic location capable of being specified is not irradiated with a laser beam.

[0017] In the information processing device of a second aspect of the invention according to the information processing device of the first aspect of the invention, the derivation unit derives designated pixel real space coordinates, which are coordinates of designated pixels on the real space which are designated as pixels corresponding to the position on the real space in each of the first captured image and the second captured image which are acquired by the acquisition unit, on the basis of the derived imaging position distance.

[0018] Therefore, according to the information processing device of the second aspect of the invention, it is possible to derive designated pixel real space coordinates even when a characteristic location capable of being specified is not irradiated with a laser beam.

[0019] In the information processing device of a third aspect of the invention according to the information processing device of the second aspect of the invention, the designated pixel real space coordinates are specified on the basis of the imaging position distance, the focal length, and the dimensions.

[0020] Therefore, according to the information processing device of the third aspect of the invention, it is possible to derive the designated pixel real space coordinates with a high level of accuracy, as compared to a case where the designated pixel real space coordinates are not specified on the basis of the imaging position distance, the designated pixel coordinates, the focal length of the imaging lens, and the dimensions of the imaging pixel.

[0021] In the information processing device of a fourth aspect of the invention according to the information processing device of any one of the first to third aspects of the invention, the derivation unit derives a direction of a plane, including coordinates on the real space which correspond to the plurality of pixel coordinates, which is specified by a plane equation indicating the plane on the basis of the plurality of pixel coordinates, the focal length, and the dimensions, decides the plane equation on the basis of the derived direction and the emission position coordinates, and derives the imaging position distance on the basis of the decided plane equation, the focal length, and the dimensions.

[0022] Therefore, according to the information processing device of the fourth aspect of the invention, it is possible to derive the imaging position distance with a high level of accuracy, as compared to a case where the imaging position distance is derived without using the plane equation in a case where a characteristic location capable of being specified is not irradiated with a laser beam.

[0023] In the information processing device according to a fifth aspect of the invention according to the information processing device of any one of the first to fourth aspects, the plurality of pixels are designated by first pixel designation information for designating a pixel from each of the first captured image and the second captured image, the first pixel designation information being received by a first reception unit receiving the first pixel designation information, the acquisition unit acquires a plurality of coordinates for specifying the plurality of pixels designated in accordance with the first pixel designation information as the plurality of pixel coordinates, and the derivation unit derives the imaging position distance on the basis of the plurality of pixel coordinates acquired by the acquisition unit, the emission position coordinates, the focal length, and the dimensions.

[0024] Therefore, according to the information processing device of the fifth aspect of the invention, it is possible to derive the imaging position distance on the basis of a plurality of pixel coordinates acquired by a user's intention.

[0025] In the information processing device of a sixth aspect of the invention according to the information processing device of any one of the first to fourth aspects of the invention, the acquisition unit acquires a plurality of coordinates, as the plurality of pixel coordinates, for specifying

a plurality of characteristic pixels more than three pixels which are present in the same planar region as the emission position on the real space and correspond to the position on the real space in each of the first captured image and the second captured image, and the derivation unit derives the imaging position distance on the basis of the plurality of pixel coordinates acquired by the acquisition unit, the emission position coordinates, the focal length, and the dimensions.

[0026] Therefore, according to the information processing device of the sixth aspect of the invention, it is possible to derive the imaging position distance on the basis of a plurality of pixel coordinates with a small number of operations, as compared to a case where a plurality of pixels for specifying the plurality of pixel coordinates are designated by the user in acquiring the plurality of pixel coordinates used for the derivation of the imaging position distance.

[0027] In the information processing device of a seventh aspect of the invention according to the information processing device of the sixth aspect of the invention, the plurality of characteristic pixels are a predetermined number of pixels more than three pixels which are present in the same planar region as the emission position on the real space and correspond to the position on the real space in each of the first captured image and the second captured image, and are a plurality of pixels for maximizing an area surrounded.

[0028] Therefore, according to the information processing device of the seventh aspect of the invention, it is possible to derive the imaging position distance with a high level of accuracy, as compared to a case where a plurality of pixels not for maximizing an area surrounded are adopted as the plurality of characteristic pixels.

[0029] The information processing device of an eighth aspect of the invention according to the information processing device of the sixth aspect of the invention further includes a first control unit that performs control of displaying at least one of the first captured image and the second captured image on a first display unit, and displaying a corresponding region corresponding to the same planar region as the emission position within a display region so as to be distinguishable from the other regions, in which the acquisition unit acquires a plurality of coordinates for specifying the plurality of characteristic pixels as the plurality of pixel coordinates, from a portion of the corresponding region designated in accordance with region designation information received by a second reception unit receiving the region designation information for designating a portion of the corresponding region in a state where the corresponding region is displayed on the first display unit.

[0030] Therefore, according to the information processing device of the eighth aspect of the invention, it is possible to acquire a plurality of pixel coordinates with a small load, as compared to a case where the plurality of pixel coordinates are acquired from the entire corresponding region.

[0031] In the information processing device of a ninth aspect of the invention according to the information processing device of any one of the first to eighth aspects of the invention, the designated pixel, which is related to one of the first captured image and the second captured image among the designated pixels designated as a pixel corresponding to the position on the real space in each of the first captured image and the second captured image which are acquired by the acquisition unit, is a pixel designated in accordance with second pixel designation information received by a third reception unit receiving the second pixel designation information for designating a pixel from one of the first captured image and the second captured image, and the designated pixel related to the other one of the first captured image and the second captured image is a pixel which is included in the other one of the first captured image and the second captured image and corresponds to a position of the pixel designated in accordance with the second pixel designation information on the real space.

[0032] Therefore, according to the information processing device of the ninth aspect of the invention, it is possible to rapidly determine a designated pixel related to both the first captured image and the second captured image, as compared to a case where the designated pixel related to both the first captured image and the second captured image is designated by the user.

[0033] The information processing device of a tenth aspect of the invention according to the information processing device of any one of the first to ninth aspects of the invention further includes a measurement unit that measures the distance by emitting the directional light and receiving the reflected light, in which the acquisition unit acquires the distance measured by the measurement unit.

[0034] Therefore, according to the information processing device of the tenth aspect of the invention, it is possible to easily acquire the distance used for the derivation of the emission position coordinates, as compared to a case where the measurement unit is not provided.

[0035] The information processing device of an eleventh aspect of the invention according to the information processing device of any one of the first to tenth aspects of the invention further includes an imaging unit that images the subject, in which the acquisition unit that acquires the first captured image obtained by imaging the subject by the imaging unit from the first imaging position, and the second captured image obtained by imaging the subject by the imaging unit from the second imaging position.

[0036] Therefore, according to the information processing device of the eleventh aspect of the invention, it is possible to easily acquire the first captured image and the second captured image which are used to obtain the designated pixel coordinates and the plurality of pixel coordinates, as compared to a case where the imaging unit is not provided.

[0037] In the information processing device of a twelfth aspect of the invention according to the information processing device of any one of the first to eleventh aspects of the invention, the acquisition unit further acquires a reference distance to the subject which is measured by emitting the directional light to the subject from the other one of the position corresponding to the first imaging position and the position corresponding to the second imaging position and receiving the reflected light of the directional light, and the derivation unit further derives a reference imaging position distance which is the distance between the first imaging position and the second imaging position on the basis of the plurality of pixel coordinates, reference emission position coordinates for specifying the emission position on the real space and derived on the basis of the reference distance acquired by the acquisition unit, the focal length, and the dimensions, and adjusts the imaging position distance with reference to the derived reference imaging position distance to derive a final imaging position distance which is finally adopted as the distance between the first imaging position and the second imaging position.

[0038] Therefore, according to the information processing device of the twelfth aspect of the invention, it is possible to derive the distance between the first imaging position and the second imaging position with a high level of accuracy, as compared to a case where the reference imaging position distance is not used.

[0039] In the information processing device of a thirteenth aspect of the invention according to the information processing device of the twelfth aspect of the invention, the derivation unit derives final designated pixel real space coordinates, which are finally adopted as the coordinates of the designated pixels on the real space which are designated as pixels corresponding to the position on the real space in each of the first captured image and the second captured image which are acquired by the acquisition unit, on the basis of the derived final imaging position distance.

[0040] Therefore, according to the information processing device of the thirteenth aspect of the invention, it is possible to derive the coordinates of the designated pixel on the real space with a high level of accuracy, as compared to a case where the coordinates of the designated pixel on the real space are derived without using the final imaging position distance derived with reference to the reference imaging position distance.

[0041] In the information processing device of a fourteenth aspect of the invention according to the information processing device of the thirteenth aspect of the invention, the final designated pixel real space coordinates are specified on the basis of the final imaging position distance, the focal length, and the dimensions.

[0042] Therefore, according to the information processing device of the fourteenth aspect of the invention, it is possible to derive the final designated pixel real space coordinates with a high level of accuracy, as compared to a case where the final designated pixel real space coordinates are not specified on the basis of the final imaging position distance, the designated pixel coordinates, the focal length of the imaging lens, and the dimensions of the imaging pixel.

[0043] The information processing device of a fifteenth aspect of the invention according to the information processing device of any one of the first to fourteenth aspects of the invention further includes a second control unit that performs control of displaying derivation results of the derivation unit on a second display unit.

[0044] Therefore, according to the information processing device of the fifteenth aspect of the invention, it is possible to make the user easily recognize the derivation results of the derivation unit, as compared to a case where the derivation results of the derivation unit are not displayed.

[0045] An information processing method of a sixteenth aspect of the invention includes acquiring a first captured image obtained by imaging a subject from a first imaging position, a second captured image obtained by imaging the subject from a second imaging position different from the first imaging position, and a distance from one of a position corresponding to the first imaging position and a position corresponding to the second imaging position to the subject, the distance being measured by emitting directional light, which has directivity, to the subject and receiving a reflected light of the directional light, and deriving an imaging position distance which is a distance between the first imaging position and the second imaging position, on the basis of a plurality of pixel coordinates being a plurality of coordinates for specifying a plurality of pixels of more than three pixels which are present in the same planar region as an emission position irradiated with the directional light on the real space and correspond to the position on the real space in each of the acquired first captured image and second captured image, emission position coordinates which specifies the emission position on the real space and are derived on the basis of the acquired distance, a focal length of an imaging lens used for the imaging of the subject, and dimensions of imaging pixels included in an imaging pixel group for imaging the subject.

[0046] Therefore, according to the information processing method of the sixteenth aspect of the invention, it is possible to derive the imaging position distance on the basis of captured images obtained by imaging the subject from each of different imaging positions even when a characteristic location capable of being specified is not irradiated with a laser beam.

[0047] A program of a seventeenth aspect of the invention, the program causing a computer to execute processes of acquiring a first captured image obtained by imaging a subject from a first imaging position, a second captured image obtained by imaging the subject from a second imaging position different from the first imaging position, and a distance from one of a position corresponding to the first imaging position and a position corresponding to the second imaging position to the subject, the distance being measured by emitting directional light, which has directivity, to the subject and receiving a reflected light of the directional light, and deriving an imaging position distance which is a distance between the first imaging position and the second imaging position, on the basis of a plurality of pixel coordinates being a plurality of coordinates for specifying a plurality of pixels of more than three pixels which are present in the same planar region as an emission position irradiated with the directional light on the real space and correspond to the position on the real space in each of the acquired first captured image and second captured image, emission position coordinates which specifies the emission position on the real space and are derived on the basis of the acquired distance, a focal length of an imaging lens used for the imaging of the subject, and dimensions of imaging pixels included in an imaging pixel group for imaging the subject.

[0048] Therefore, according to the program of the seventeenth aspect of the invention, it is possible to derive the imaging position distance on the basis of captured images obtained by imaging the subject from each of different imaging positions even when a characteristic location capable of being specified is not irradiated with a laser beam.

[0049] According to one embodiment of the invention, it is possible to obtain an effect that an imaging position distance can be derived on the basis of captured images obtained by performing imaging from each of different imaging positions even when a characteristic location capable of being specified is not irradiated with a laser beam.

BRIEF DESCRIPTION OF THE DRAWINGS

[0050] Exemplary embodiments according to the technique of the present disclosure will be described in detail based on the following figures, wherein:

[0051] FIG. **1** is a front view illustrating an example of the appearance of a distance measurement device according to first to fifth embodiments;

[0052] FIG. **2** is a block diagram illustrating an example of a hardware configuration of the distance measurement device according to the first to fourth embodiments;

[0053] FIG. **3** is a time chart illustrating an example of a measurement sequence of the distance measurement device according to the first to sixth embodiments.

[0054] FIG. **4** is a time chart illustrating an example of a laser trigger, a light emission signal, a light receiving signal, and a count signal which are required in a case where measurement is performed once by the distance measurement device according to the first to sixth embodiments;

[0055] FIG. **5** is a graph illustrating an example of a histogram (histogram in a case where a distance (measured value) to a subject is represented by a lateral axis and the number of times of measurement is represented by a vertical axis) of measured values obtained by the measurement sequence of the distance measurement device according to the first to sixth embodiments;

[0056] FIG. **6** is a block diagram illustrating an example of a hardware configuration of a main control unit included in the distance measurement device according to the first to sixth embodiments;

[0057] FIG. **7** is a schematic plan view illustrating an example of a positional relationship between the distance measurement device and the subject according to the first to fourth embodiments and the sixth embodiment;

[0058] FIG. **8** is a conceptual diagram illustrating an example of a positional relationship between a portion of the subject, a first captured image, a second captured image, a principal point of an imaging lens at a first imaging position, and a principal point of the imaging lens at a second imaging position;

[0059] FIG. **9** is a block diagram illustrating an example of a main function of a CPU according to the first to sixth embodiments;

[0060] FIG. **10** is a diagram illustrating a method of calculating emission position coordinates according to the first to sixth embodiments;

[0061] FIG. **11** is a flowchart illustrating an example of a flow of an imaging position distance calculation process according to the first embodiment;

[0062] FIG. **12** is the continuation of the flowchart illustrated in FIG. **11**;

[0063] FIG. **13** is a conceptual diagram illustrating an example of a subject included in an imaging range of an imaging device according to the first to sixth embodiments;

[0064] FIG. **14** is a schematic image illustrating an example of the first captured image obtained by the imaging device according to the first embodiment;

[0065] FIG. **15** is a schematic image illustrating an example of the first captured image obtained by the imaging device according to the first embodiment;

[0066] FIG. **16** is a schematic image illustrating an example of the first captured image obtained by the imaging device according to the first embodiment;

[0067] FIG. **17** is a schematic image illustrating an example of the first captured image obtained by the imaging device according to the first embodiment;

[0068] FIG. **18** is a flowchart illustrating an example of a flow of a three-dimensional coordinate calculation process according to the first embodiment;

[0069] FIG. **19** is a schematic image illustrating an example of the second captured image obtained by the imaging device according to the first embodiment;

[0070] FIG. **20** is a schematic image illustrating an example of the first captured image obtained by the imaging device according to the first embodiment;

[0071] FIG. **21** is a flowchart illustrating an example of a flow of an imaging position distance calculation process according to the second embodiment;

[0072] FIG. **22** is a schematic image illustrating an example of a first captured image obtained by an imaging device according to the second embodiment;

[0073] FIG. **23** is a schematic image illustrating an example of the first captured image obtained by the imaging device according to the second embodiment;

[0074] FIG. **24** is a flowchart illustrating an example of a flow of an imaging position distance calculation process according to the third embodiment;

[0075] FIG. **25** is the continuation of the flowchart illustrated in FIG. **24**;

[0076] FIG. **26** is a flowchart illustrating an example of a flow of an imaging position distance calculation process according to the fourth embodiment;

[0077] FIG. **27** is a schematic image illustrating an example of a second captured image obtained by an imaging device according to the fourth embodiment;

[0078] FIG. **28** is a flowchart illustrating an example of a flow of a three-dimensional coordinate calculation process according to the fourth embodiment;

[0079] FIG. **29** is a schematic image illustrating an example of the second captured image obtained by the imaging device according to the fourth embodiment;

[0080] FIG. **30** is a schematic plan view illustrating an example of a positional relationship between two distance measurement devices, a PC, and a subject according to the fifth embodiment;

[0081] FIG. **31** is a block diagram illustrating an example of a hardware configuration of a distance measurement device according to the fifth embodiment;

[0082] FIG. **32** is a block diagram illustrating an example of a hardware configuration of the PC according to the fifth embodiment;

[0083] FIG. **33** is a block diagram illustrating an example of a hardware configuration of a distance measurement device according to the sixth embodiment;

[0084] FIG. **34** is a screen view illustrating an example of a screen including various buttons displayed as soft keys on a display unit of a smart device included in the distance measurement device according to the sixth embodiment;

[0085] FIG. **35** is a conceptual diagram illustrating an example of a mode in which an imaging position distance calculation program and a three-dimensional coordinate calculation program are installed in the distance measurement device or the PC from a storage medium in which the imaging position distance calculation program and the three-dimensional coordinate calculation program according to the first to fourth embodiments are stored; and

[0086] FIG. **36** is a front view illustrating a modification example of the appearance of the distance measurement device according to the first to sixth embodiments.

DETAILED DESCRIPTION

[0087] Hereinafter, an example of an embodiment according to a technique of this disclosure will be described with reference to the accompanying drawings. Meanwhile, in this embodiment, for convenience of description, a distance from a distance measurement device **10**A to a subject to be

measured will be also simply referred to as a "distance" or a "distance to a subject". In this embodiment, an angle of view with respect to a subject will be also simply referred to as an "angle of view".

First Embodiment

[0088] As illustrated in FIG. **1** as an example, the distance measurement device **10**A which is an example of an information processing device according to the technique of this disclosure includes a distance measurement unit **12** and an imaging device **14**. Meanwhile, in this embodiment, the distance measurement unit **12** and a distance measurement control unit **68** to be described later (see FIG. **2**) are examples of a measurement unit according to the technique of this disclosure, and the imaging device **14** is an example of an imaging unit according to the technique of this disclosure.

[0089] The imaging device **14** includes a lens unit **16** and an imaging device main body **18**, and the lens unit **16** is detachably attached to the imaging device main body **18**.

[0090] A hot shoe (Hot Shoe) **20** is provided on the left surface of the imaging device main body **18** in a front view, and the distance measurement unit **12** is detachably attached to the hot shoe **20**.

[0091] The distance measurement device **10**A has a distance measurement system function of emitting a laser beam for distance measurement to the distance measurement unit **12** to perform distance measurement and an imaging system function of causing the imaging device **14** to image a subject to obtain a captured image. Meanwhile, hereinafter, a captured image will be also simply referred to as an "image". In addition, hereinafter, for convenience of description, a description will be given on the assumption that the height of an optical axis L**1** (see FIG. **2**) of a laser beam emitted from the distance measurement unit **12** is the same as the height of an optical axis L**2** (see FIG. **2**) of the lens unit **16** in the vertical direction.

[0092] The distance measurement device **10**A operates the distance measurement system function to perform a measurement sequence (see FIG. **3**) once in accordance with one instruction, and one distance is finally output by the measurement sequence being performed once,

[0093] The distance measurement device **10**A has a still image imaging mode and a movie imaging mode as an operation mode of the imaging system function. The still image imaging mode is an operation mode for capturing a still image, and the movie imaging mode is an operation mode for capturing a moving image. The still image imaging mode and the movie imaging mode are selectively set in accordance with a user's instruction.

[0094] As illustrated in FIG. **2** as an example, the distance measurement unit **12** includes an emitting unit **22**, a light receiving unit **24**, and a connector **26**.

[0095] The connector **26** can be connected to the hot shoe **20**, and the distance measurement unit **12** is operated under the control of the imaging device main body **18** in a state where the connector **26** is connected to the hot shoe **20**.

[0096] The emitting unit **22** includes a Laser Diode (LD) **30**, a condensing lens (not shown), an objective lens **32**, and an LD driver **34**.

[0097] The condensing lens and the objective lens **32** are provided along the optical axis L**1** of a laser beam emitted by the LD **30**, and are disposed in this order along the optical axis L**1** from the LD **30** side.

[0098] The LD **30** emits a laser beam for distance measurement which is an example of a directional light according to the technique of this disclosure. The laser beam emitted by the LD **30** is a colored laser beam, and a real space emission position which is an emission position on the real space of the laser beam is visually recognized on the real space and is also visually recognized from a captured image obtained by the imaging device **14**, for example, within a range of approximately several meters from the emitting unit **22**. Meanwhile, hereinafter, for convenience of description, the real space emission position of the laser beam will also be simply referred to as an "emission position".

[0099] The condensing lens condenses a laser beam emitted by the LD **30**, and transmits the condensed laser beam. The objective lens **32** faces a subject, and emits the laser beam passing through the condensing lens to the subject.

[0100] The LD driver **34** is connected to the connector **26** and the LD **30**, and drives the LD **30** in accordance with an instruction of the imaging device main body **18** to emit a laser beam.

[0101] The light receiving unit **24** includes a Photo Diode (PD) **36**, an objective lens **38**, and a light receiving signal processing circuit **40**. The objective lens **38** is disposed on a light receiving surface side of the PD **36**, and a reflected laser beam which is a laser beam emitted by the emitting unit **22** and reflected from the subject is incident on the objective lens **38**. The objective lens **38** transmits the reflected laser beam and guides the reflected laser beam to the light receiving surface of the PD **36**. The PD **36** receives the reflected laser beam having passed through the objective lens **38**, and outputs an analog signal based on the amount of light received, as a light receiving signal.

[0102] The light receiving signal processing circuit **40** is connected to the connector **26** and the PD **36**, amplifies the light receiving signal, which is input from the PD **36**, by an amplifier (not shown), and performs Analog/Digital (A/D) conversion on the amplified light receiving signal. The light receiving signal processing circuit **40** outputs the light receiving signal digitalized by the A/D conversion to the imaging device main body **18**.

[0103] The imaging device **14** includes mounts **42** and **44**. The mount **42** is provided in the imaging device main body **18**, and the mount **44** is provided in the lens unit **16**. The lens unit **16** is exchangeably mounted on the imaging device main body **18** by the mount **44** being coupled to the mount **42**.

[0104] The lens unit **16** includes an imaging lens **50**, a zoom lens **52**, a zoom lens moving mechanism **54**, and a motor **56**.

[0105] Subject light which is light reflected from the subject is incident on the imaging lens **50**. The imaging lens **50** transmits the subject light and guides the subject light to the zoom lens **52**.

[0106] The zoom lens **52** is attached to the zoom lens moving mechanism **54** so as to be slidable with respect to the optical axis L**2**. In addition, the motor **56** is connected to the zoom lens moving mechanism **54**, and the zoom lens moving mechanism **54** receives the power of the motor **56** to make the zoom lens **52** slide along the direction of the optical axis L**2**.

[0107] The motor **56** is connected to the imaging device main body **18** through the mounts **42** and **44**, and driving is controlled in accordance with a command from the imaging device main body **18**. Meanwhile, in this embodiment, a

stepping motor is applied as an example of the motor **56**. Therefore, the motor **56** is operated in synchronization with a pulse power on the basis of a command from the imaging device main body **18**.

[0108] The imaging device main body **18** includes an imaging element **60**, a main control unit **62**, an image memory **64**, an image processing unit **66**, a distance measurement control unit **68**, a motor driver **72**, an imaging element driver **74**, an image signal processing circuit **76**, and a display control unit **78**. In addition, the imaging device main body **18** includes a touch panel interface (I/F) **79**, a reception I/F **80**, and a media I/F **82**.

[0109] The main control unit **62**, the image memory **64**, the image processing unit **66**, the distance measurement control unit **68**, the motor driver **72**, the imaging element driver **74**, the image signal processing circuit **76**, and the display control unit **78** are connected to a bus line **84**. In addition, the touch panel I/F **79**, the reception I/F **80**, and the media I/F **82** are also connected to the bus line **84**.

[0110] The imaging element **60** is a Complementary Metal Oxide Semicondutor (CMOS) type image sensor, and includes color filters (not shown). The color filters include a G filter corresponding to green (G), an R filter corresponding to red (R), and a B filter corresponding to blue (B) which most contribute to the obtainment of a brightness signal. The imaging element **60** includes an imaging pixel group **60**A including a plurality of imaging pixels **60A1** arranged in a matrix. Any one filter of the R filter, the G filter, and the B filter included in the color filters is allocated to each of the imaging pixels **60A1**, and the imaging pixel group **60**A receives the subject light to image the subject.

[0111] That is, the subject light having passed through the zoom lens **52** is imaged on the light receiving surface of the imaging element **60**, and charge based on the amount of subject light received is accumulated in the imaging pixels **60A1**. The imaging element **60** outputs the charge accumulated in the imaging pixels **60A1** as an image signal indicating an image equivalent to a subject image which is obtained by imaging the subject light on the light receiving surface.

[0112] The main control unit **62** controls the entire distance measurement device **10**A through the bus line **84**.

[0113] The motor driver **72** is connected to the motor **56** through the mounts **42** and **44**, and controls the motor **56** in accordance with an instruction of the main control unit **62**.

[0114] The imaging device **14** has a viewing angle changing function. The viewing angle changing function is a function of changing an angle of view by moving the zoom lens **52**, and is realized by the zoom lens **52**, the zoom lens moving mechanism **54**, the motor **56**, the motor driver **72**, and the main control unit **62** in this embodiment. Meanwhile, in this embodiment, an optical viewing angle changing function of the zoom lens **52** is described. However, the technique of this disclosure is not limited thereto, an electronic viewing angle changing function not using the zoom lens **52** may be used.

[0115] The imaging element driver **74** is connected to the imaging element **60**, and provides a driving pulse to the imaging element **60** under the control of the main control unit **62**. The imaging pixels **60A1** included in the imaging pixel group **60**A are driven in accordance with the driving pulse supplied to the imaging element **60** by the imaging element driver **74**.

[0116] The image signal processing circuit **76** is connected to the imaging element **60**, and reads out an image signal for one frame from the imaging element **60** for each imaging pixel **60A1** under the control of the main control unit **62**. The image signal processing circuit **76** performs various processing, such as correlative double sampling processing, automatic gain control, and A/D conversion, on the read-out image signal. The image signal processing circuit **76** outputs an image signal, which is digitalized by performing various processing on the image signal, to the image memory **64** for each frame at a specific frame rate (for example, several tens of frames per second) which is specified by a clock signal supplied from the main control unit **62**. The image memory **64** temporarily holds the image signal which is input from the image signal processing circuit **76**.

[0117] The imaging device main body **18** includes a display unit **86**, a touch panel **88**, a reception device **90**, and a memory card **92**.

[0118] The display unit **86** which is an example of each of a first display unit and a second display unit according to the technique of this disclosure is connected to the display control unit **78**, and displays various information under the control of the display control unit **78**. The display unit **86** is realized by, for example, a Liquid Crystal Display (LCD).

[0119] The touch panel **88** which is an example of each of first to third reception units according to the technique of this disclosure is superimposed on a display screen of the display unit **86**, and receives a touch of a user's finger or an indicator such as a touch pen. The touch panel **88** is connected to the touch panel I/F **79**, and outputs positional information indicating a position touched by the indicator to the touch panel I/F **79**. The touch panel I/F **79** operates the touch panel **88** in accordance with an instruction of the main control unit **62**, and outputs the positional information, which is input from the touch panel **88**, to the main control unit **62**. Meanwhile, in this embodiment, the touch panel **88** is described as an example of the first to third reception units according to the technique of this disclosure, but the invention is not limited thereto. A mouse (not shown) used by being connected to the distance measurement device **10**A may be applied instead of the touch panel **88**, or the touch panel **88** and the mouse may be used in combination.

[0120] The reception device **90** includes a measurement and imaging button **90**A, an imaging button **90**B, an imaging system operation mode switching button **90**C, a wide angle instruction button **90**D, and a telephoto instruction button **90**E. In addition, the reception device **90** also includes an imaging position distance calculation button **90**F, a three-dimensional coordinate calculation button **90**G, and the like, and receives the user's various instructions. The reception device **90** is connected to the reception I/F **80**, and the reception I/F **80** outputs an instruction content signal indicating contents of an instruction received by the reception device **90** to the main control unit **62**.

[0121] The measurement and imaging button **90**A is a pressing type button that receives an instruction for starting measurement and imaging. The imaging button **90**B is a pressing type button that receives an instruction for starting imaging. The imaging system operation mode switching button **90**C is a pressing type button that receives an instruction for switching between a still image imaging mode and a movie imaging mode.

[0122] The wide angle instruction button **90**D is a pressing type button that receives an instruction for setting an angle

of view to be a wide angle, and the amount of change of the angle of view to the wide angle side is determined depending on a pressing time for which the pressing of the wide angle instruction button **90**D is continuously performed within an allowable range.

[0123] The telephoto instruction button **90**E is a pressing type button that receives an instruction for setting an angle of view to be at a telephoto side, the amount of change of the angle of view to the telephoto side is determined depending on a pressing time for which the pressing of the telephoto instruction button **90**E is continuously performed within an allowable range.

[0124] The imaging position distance calculation button **90**F is a pressing type button that receives an instruction for starting an imaging position distance calculation process to be described later. The three-dimensional coordinate calculation button **90**G is a pressing type button that receives an instruction for starting an imaging position distance calculation process to be described later and a three-dimensional coordinate calculation process to be described later.

[0125] Meanwhile, hereinafter, for convenience of description, the measurement and imaging button **90**A and the imaging button **90**B will be referred to as a "release button" in a case where it is not necessary to give a description by distinguishing between the buttons. In addition, hereinafter, for convenience of description, the wide angle instruction button **90**D and the telephoto instruction button **90**E will be referred to as an "angle of view instruction button" in a case where it is not necessary to give a description by distinguishing between the buttons.

[0126] Meanwhile, in the distance measurement device **10**A according to this embodiment, a manual focus mode and an autofocus mode are selectively set in accordance with the user's instruction through the reception device **90**. The release button receives two-stage pressing operations of an imaging preparation instruction state and an imaging instruction state. The imaging preparation instruction state refers to, for example, a state where the release button is pressed to an intermediate position (half pressing position) from a waiting position, and the imaging instruction state refers to a state where the release button is pressed to a final pressing position (full pressing position) beyond the intermediate position. Meanwhile, hereinafter, for convenience of description, the "state where the release button is pressed to the half pressing position from the waiting position" will be referred to as a "half pressing state", and the "state where the release button is pressed to the full pressing position from the waiting position" will be referred to as a "full pressing state".

[0127] In the autofocus mode, the adjustment of imaging conditions is performed by the release button being set to be in a half pressing state. Thereafter, when the release button is subsequently set to be in a full pressing state, the actual exposure is performed. That is, after exposure adjustment is performed by the operation of an Automatic Exposure (AE) function by the release button being set to be in a half pressing state prior to the actual exposure, focus adjustment is performed by the operation of an Auto-Focus (AF) function, and the actual exposure is performed when the release button is set to be in a full pressing state.

[0128] Here, the actual exposure refers to exposure performed to obtain a still image file to be described later. In this embodiment, the exposure means exposure performed to obtain a live view image to be described later and exposure performed to obtain a moving image file to be described later, in addition to the actual exposure. Hereinafter, for convenience of description, the exposures will be simply referred to as "exposure" in a case where it is not necessary to give a description by distinguishing between the exposures.

[0129] Meanwhile, in this embodiment, the main control unit **62** performs exposure adjustment based on an AE function and focus adjustment based on an AF function. In this embodiment, a case where the exposure adjustment and the focus adjustment are performed is described. However, the technique of this disclosure is not limited thereto, and the exposure adjustment or the focus adjustment may be performed.

[0130] The image processing unit **66** acquires an image signal for each frame from the image memory **64** at a specific frame rate, and performs various processing, such as gamma correction, brightness and color difference conversion, and compression processing, on the acquired image signal.

[0131] The image processing unit **66** outputs the image signal, which is obtained by performing various processing, to the display control unit **78** for each frame at a specific frame rate. In addition, the image processing unit **66** outputs the image signal, which is obtained by performing various processing, to the main control unit **62** in accordance with a request of the main control unit **62**.

[0132] The display control unit **78** outputs the image signal, which is input from the image processing unit **66**, to the display unit **86** for each frame at a specific frame rate under the control of the main control unit **62**.

[0133] The display unit **86** displays an image, character information, and the like. The display unit **86** displays an image shown by the image signal, which is input from the display control unit **78** at a specific frame rate, as a live view image. The live view image is a consecutive frame image which is obtained by consecutive imaging, and is also referred to as a through-image. In addition, the display unit **86** also displays a still image which is a single frame image obtained by performing imaging using a single frame. Further, the display unit **86** also displays a reproduced image, a menu screen, and the like, in addition to the live view image.

[0134] Meanwhile, in this embodiment, the image processing unit **66** and the display control unit **78** are realized by an Application Specific Integrated Circuit (ASIC), but the technique of this disclosure is not limited thereto. For example, each of the image processing unit **66** and the display control unit **78** may be realized by a Field-Programmable Gate Array (FPGA). In addition, the image processing unit **66** may be realized by a computer including a Central Processing Unit (CPU), a Read Only Memory (ROM), and a Random Access Memory (RAM). In addition, the display control unit **78** may also be realized by a computer including a CPU, a ROM, and a RAM. Further, each of the image processing unit **66** and the display control unit **78** may be realized by a combination of a hardware configuration and a software configuration.

[0135] The main control unit **62** controls the imaging element driver **74** to cause the imaging element **60** to perform exposure for each frame in a case where an instruction for capturing a still image is received by the release button under a still image imaging mode. The main control unit **62** acquires an image signal, which is obtained by performing the exposure for each frame, from the image

processing unit **66** and performs compression processing on the acquired image signal to generate a still image file having a specific still image format. Meanwhile, here, the specific still image format refers to, for example, Joint Photographic Experts Group (JPEG).

[0136] The main control unit **62** acquires an image signal, which is output to the display control unit **78** as a signal for a live view image by the image processing unit **66**, for each frame at a specific frame rate in a case where an instruction for capturing a moving image is received by the release button under a movie imaging mode. The main control unit **62** performs compression processing on the image signal acquired from the image processing unit **66** to generate a moving image file having a specific moving image format. Meanwhile, here, the specific moving image format refers to, for example, Moving Picture Experts Group (MPEG). Meanwhile, hereinafter, for convenience of description, the still image file and the moving image file will be referred to as an image file in a case where it is not necessary to give a description by distinguishing between the image files.

[0137] The media I/F **82** is connected to the memory card **92**, and performs the recording and read-out of the image file on the memory card **92** under the control of the main control unit **62**. Meanwhile, the image file which is read out from the memory card **92** by the media I/F **82** is subjected to extension processing by the main control unit **62** to be displayed on the display unit **86** as a reproduced image.

[0138] Meanwhile, the main control unit **62** stores distance information, which is input from the distance measurement control unit **68**, in the memory card **92** through the media I/F **82** in association with the image file. The distance information is read out together with the image file by the main control unit **62** from the memory card **92** through the media I/F **82**, and a distance indicated by the read-out distance information is displayed on the display unit **86** together with the reproduced image based on the associated image file.

[0139] The distance measurement control unit **68** controls the distance measurement unit **12** under the control of the main control unit **62**. Meanwhile, in this embodiment, the distance measurement control unit **68** is realized by an ASIC, but the technique of this disclosure is not limited thereto. For example, the distance measurement control unit **68** may be realized by a FPGA. In addition, the distance measurement control unit **68** may be realized by a computer including a CPU, a ROM, and a RAM. Further, the distance measurement control unit **68** may be realized by a combination of a hardware configuration and a software configuration.

[0140] The hot shoe **20** is connected to the bus line **84**, and the distance measurement control unit **68** controls the LD driver **34** to control the emission of a laser beam by the LD **30** under the control of the main control unit **62** and acquires a light receiving signal from the light receiving signal processing circuit **40**. The distance measurement control unit **68** derives a distance to the subject on the basis of a timing when the laser beam is emitted and a timing when the light receiving signal is acquired, and outputs distance information indicating the derived distance to the main control unit **62**.

[0141] Here, the measurement of a distance to the subject by the distance measurement control unit **68** will be described in more detail.

[0142] As illustrated in FIG. **3** as an example, one measurement sequence by the distance measurement device **10**A is specified by a voltage adjustment period, a real measurement period, and a pause period.

[0143] The voltage adjustment period is a period in which driving voltages of the LD **30** and the PD **36** are adjusted. The real measurement period is a period in which a distance to the subject is actually measured. In the real measurement period, an operation of causing the LD **30** to emit a laser beam and causing the PD **36** to receive the reflected laser beam is repeated several hundred times, and a distance to the subject is derived on the basis of a timing when the laser beam is emitted and a timing when the light receiving signal is acquired. The pause period is a period for stopping the driving of the LD **30** and the PD **36**. Accordingly, in one measurement sequence, the measurement of a distance to the subject is performed several hundred times.

[0144] Meanwhile, in this embodiment, each of the voltage adjustment period, the real measurement period, and the pause period is set to be several hundred milliseconds.

[0145] As illustrated in FIG. **4** as an example, a count signal for specifying a timing when the distance measurement control unit **68** gives an instruction for emitting a laser beam and a timing when a light receiving signal is acquired is provided to the distance measurement control unit **68**. In this embodiment, the count signal is generated by the main control unit **62** and is supplied to the distance measurement control unit **68**. However, the invention is not limited thereto, and the control signal may be generated by a dedicated circuit, such as a time counter, which is connected to the bus line **84**, and may be supplied to the distance measurement control unit **68**.

[0146] The distance measurement control unit **68** outputs a laser trigger for emitting a laser beam to the LD driver **34** in accordance with the count signal. The LD driver **34** drives the LD **30** to emit a laser beam in accordance with the laser trigger.

[0147] In the example illustrated in FIG. **4**, a light emission time of a laser beam is set to be several tens of nanoseconds. In this case, a time until the laser beam, which is emitted toward a subject positioned several kilometers ahead by the emitting unit **22**, is received by the PD **36** as a reflected laser beam is set to be "several kilometers×2/speed of light"=several microseconds. Therefore, as illustrated in FIG. **3** as an example, a time of several microseconds is required as a minimum necessary time in order to measure a distance to the subject positioned several kilometers ahead.

[0148] Meanwhile, in this embodiment, as illustrated in FIG. **3** as an example, one measurement time is set to be several milliseconds in consideration of a reciprocating time of the laser beam, and the like. However, the reciprocating time of the laser beam varies depending on a distance to the subject, and thus one measurement time may vary in accordance with an assumed distance.

[0149] In a case where a distance to the subject is derived on the basis of measured values obtained from several hundred times of measurement in one measurement sequence, the distance measurement control unit **68** analyzes, for example, a histogram of the measured values obtained from several hundred times of measurement to derive a distance to the subject.

[0150] As illustrated in FIG. **5** as an example, in a histogram of measured values obtained from several hundred

times of measurement in one measurement sequence, the lateral axis represents a distance to a subject, the vertical axis represents the number of times of measurement, and a distance corresponding to a maximum value of the number of times of measurement is derived by the distance measurement control unit **68** as a distance measurement result. Meanwhile, the histogram illustrated in FIG. **5** is just an example, and a histogram may be generated on the basis of a reciprocating time (an elapsed time from the emission of light to the reception of light) of a laser beam, half of the reciprocating time of the laser beam, and the like, instead of the distance to the subject.

[0151] As illustrated in FIG. **6** as an example, the main control unit **62** includes a CPU **100**, a primary storage unit **102**, and a secondary storage unit **104** which are examples of an acquisition unit and a derivation unit according to the technique of this disclosure. The CPU **100** controls the entire distance measurement device **10**A. The primary storage unit **102** is a volatile memory which is used as a work area during the execution of various programs, and the like. An example of the primary storage unit **102** is a RAM. The secondary storage unit **104** is a non-volatile memory that stores control programs, various parameters, and the like for controlling the operation of the distance measurement device **10**A. An example of the secondary storage unit **104** is an Electrically Erasable Programmable Read Only Memory (EEPROM) and a flash memory. The CPU **100**, the primary storage unit **102**, and the secondary storage unit **104** are connected to each other through the bus line **84**.

[0152] The distance measurement device **10**A has a three-dimensional coordinate calculation function. The three-dimensional coordinate calculation function refers to a function of calculating designated pixel three-dimensional coordinates to be described later, on the basis of Expression (1) from first designated pixel coordinates to be described later, second designated pixel coordinates to be described later, an imaging position distance to be described later, a focal length of the imaging lens **50**, and the dimension of the imaging pixel **60**A**1**.

$$X = \frac{B}{u_L - u_R} u_L,\ Y = \frac{B}{u_L - u_R} v_L,\ Z = \frac{B}{u_L - u_R} f \tag{1}$$

[0153] Meanwhile, in Expression (1), "u_L" denotes an X coordinate of the first designated pixel coordinates. In Expression (1), "v_L" denotes a Y coordinate of the first designated pixel coordinates. In Expression (1), "u_R" denotes an X coordinate of the second designated pixel coordinates. In Expression (1), "B" denotes the imaging position distance (see FIGS. **7** and **8**). In Expression (1), "f" denotes (focal length of the imaging lens **50**)/(dimension of the imaging pixel **60**A**1**). In Expression (1), (X, Y, Z) denotes the designated pixel three-dimensional coordinates.

[0154] The first designated pixel coordinates are two-dimensional coordinates for specifying a first designated pixel (equivalent to a "designated pixel" according to the technique of this disclosure) which is designated as a pixel corresponding to a position on the real space in a first captured image to be described later. The second designated pixel coordinates are two-dimensional coordinates for specifying a second designated pixel (equivalent to a "designated pixel" according to the technique of this disclosure) which is designated as a pixel corresponding to a position on the real space in a second captured image to be described later. That is, the first designated pixel and the second designated pixel are pixels that are designated as pixels of which the positions on the real space correspond to each other, and are pixels capable of being specified at the positions corresponding to each other in each of the first captured image and the second captured image. The first designated pixel coordinates are two-dimensional coordinates on the first captured image, and the second designated pixel coordinates are two-dimensional coordinates on the second captured image.

[0155] The designated pixel three-dimensional coordinates refer to three-dimensional coordinates which are coordinates on the real space which correspond to the first designated pixel coordinates and the second designated pixel coordinates. Meanwhile, the designated pixel three-dimensional coordinates are an example of designated pixel real space coordinates according to the technique of this disclosure.

[0156] Here, as illustrated in FIGS. **7** and **8** as examples, the first captured image refers to a captured image obtained by imaging the subject by the imaging device **14** from the first imaging position. In addition, as an example, as illustrated in FIGS. **7** and **8**, the second captured image indicates a captured image obtained by imaging a subject, including the subject imaged from the first imaging position, by the imaging device **14** from the second imaging position different from the first imaging position. Meanwhile, the invention is not limited to the first captured image and the second captured image. In this embodiment, for convenience of description, captured images obtained by the imaging of the imaging device **14**, inclusive of a still image and a moving image, will be simply referred to as a "captured image" in a case where it is not necessary to give a description by distinguishing between the captured images.

[0157] In the example illustrated in FIG. **7**, a first measurement position and a second measurement position are shown as positions of the distance measurement unit **12**. The first measurement position is an example of a "position corresponding to the first imaging position" according to the technique of this disclosure. The second measurement position is an example of a "position corresponding to the second imaging position" according to the technique of this disclosure. The first measurement position indicates the position of the distance measurement unit **12** in a case where the subject is imaged by the imaging device **14** from the first imaging position in a state where the distance measurement unit **12** is correctly attached to the imaging device **14**. The second measurement position refers to the position of the distance measurement unit **12** in a case where the subject is imaged by the imaging device **14** from the second imaging position in a state where the distance measurement unit **12** is correctly attached to the imaging device **14**.

[0158] The imaging position distance refers to a distance between the first imaging position and the second imaging position. As illustrated in FIG. **8**, an example of the imaging position distance is a distance between a principal point O_L of the imaging lens **50** of the imaging device **14** at the first imaging position and a principal point O_R of the imaging lens **50** of the imaging device **14** at the second imaging position, but the technique of this disclosure is not limited thereto. For example, a distance between the imaging pixel **60**A**1** positioned in the middle of the imaging element **60** of the imaging device **14** at the first imaging position and the imaging pixel **60**A**1** positioned in the middle of the imaging

element **60** of the imaging device **14** at the second imaging position may be set to be an imaging position distance.

[0159] In the example illustrated in FIG. **8**, a pixel P_L included in the first captured image is a first designated pixel, a pixel P_R included in the second captured image is a second designated pixel, and pixels P_L and P_R are pixels corresponding to a point P of the subject. Accordingly, first designated pixel coordinates (u_L, v_L) which are two-dimensional coordinates of the pixel P_L and second designated pixel coordinates (u_R, v_R) which are two-dimensional coordinates of the pixel P_R correspond to designated pixel three-dimensional coordinates (X, Y, Z) which are three-dimensional coordinates of the point P. Meanwhile, in Expression (1), "v_R" is not used.

[0160] Meanwhile, hereinafter, for convenience of description, the first designated pixel and the second designated pixel will be referred to as a "designated pixel" in a case where it is not necessary to give a description by distinguishing between the designated pixels. Further, hereinafter, for convenience of description, the first designated pixel coordinates and the second designated pixel coordinates will be referred to as "designated pixel coordinates" in a case where it is not necessary to give a description by distinguishing between the designated pixel coordinates.

[0161] Incidentally, in a case where designated pixel three-dimensional coordinates are calculated on the basis of Expression (1) by the distance measurement device **10**A operating a three-dimensional coordinate calculation function, it is preferable to calculate an imaging position distance with a high level of accuracy. This is because "B" which is an imaging position distance is included in Expression (1).

[0162] Consequently, in the distance measurement device **10**A, as illustrated in FIG. **6** as an example, the secondary storage unit **104** stores an imaging position distance calculation program **106** which is an example of a program according to the technique of this disclosure.

[0163] The CPU **100** reads out the imaging position distance calculation program **106** from the secondary storage unit **104** and develops the read-out program to the primary storage unit **102** to execute the imaging position distance calculation program **106**.

[0164] In addition, as illustrated in FIG. **6** as an example, the secondary storage unit **104** stores a three-dimensional coordinate calculation program **108**. The CPU **100** reads out the three-dimensional coordinate calculation program **108** from the secondary storage unit **104** and develops the read-out program to the primary storage unit **102** to execute the three-dimensional coordinate calculation program **108**.

[0165] The CPU **100** executes the imaging position distance calculation program **106** and the three-dimensional coordinate calculation program **108** to be operated as an acquisition unit **110**, a derivation unit **112**, and a control unit **114** as illustrated in FIG. **9** as an example.

[0166] The acquisition unit **110** acquires a first captured image, a second captured image, and a distance to the subject. The "distance to the subject" as mentioned herein refers to a distance to the subject which is measured on the basis of the laser beam emitted by the distance measurement unit **12** at the first measurement position.

[0167] The derivation unit **112** derives an imaging position distance on the basis of designated pixel coordinates, a plurality of pixel coordinates to be described later, emission position real space coordinates to be described later, a focal length of the imaging lens **50**, and the dimension of the imaging pixel **60**A**1**. The control unit **114** which is an example of a second control unit according to the technique of this disclosure performs control of displaying derivation results obtained by the derivation unit **112** on the display unit **86**.

[0168] Here, the plurality of pixel coordinates and the emission position real space coordinates which are used in the derivation unit **112** will be described. Meanwhile, hereinafter, for convenience of description, the "emission position real space coordinates" will also be referred to as "emission position coordinates". The plurality of pixel coordinates are a plurality of two-dimensional coordinates for specifying a plurality of pixels more than three pixels which are present in a planar region which is the same as an emission position of a laser beam on the real space and correspond to a position on the real space, in each of the first captured image and the second captured image which are acquired by the acquisition unit **110**. In addition, the emission position coordinates are three-dimensional coordinates for specifying the emission position of the laser beam on the real space, and are three-dimensional coordinates which are derived on the basis of a distance acquired by the acquisition unit **110**.

[0169] The emission position coordinates are derived on the basis of the following Expression (2) from a distance L, a half angle of view α, an emission angle β, and a distance between reference points M which are illustrated in FIG. **10** as an example. In Expression (2), (x_{Laser}, y_{Laser}, z_{Laser}) denotes emission position coordinates.

$$x_{Laser} = \frac{(M - L\cos\beta)}{L\tan\alpha\sin\beta},\ y_{Laser} = 0,\ z_{Laser} = L\sin\beta \tag{2}$$

[0170] In Expression (2), the relation of $y_{Laser}=0$ is established, but this means that the height of an optical axis L**1** is the same as the height of an optical axis L**2** in the vertical direction. In a case where the position of a laser beam emitted to the subject is higher than the position of the optical axis L**2** in the subject in the vertical direction, y_{Laser} is set to have a positive value. In a case where the position of the laser beam emitted to the subject is lower than the position of the optical axis L**2** in the subject in the vertical direction, y_{Laser} is set to have a negative value. Meanwhile, hereinafter, for convenience of description, a description will be given on the assumption that the relation of "$y_{Laser}=0$" is established.

[0171] Here, as illustrated in FIG. **10** as an example, the half angle of view α refers to half an angle of view. The emission angle β refers to an angle at which a laser beam is emitted from the emitting unit **22**. The distance between reference points M refers to a distance between a first reference point P**1** specified for the imaging device **14** and a second reference point P**2** specified for the distance measurement unit **12**. An example of the first reference point P**1** is a principal point of the imaging lens **50**. An example of the second reference point P**2** is a point which is set in advance as the starting point of coordinates capable of specifying the position of a three-dimensional space in the distance measurement unit **12**. Specifically, an example of the second reference point is one end out of right and left ends of the objective lens **38** in a front view, or one angle, that is, one apex of a housing in a case where the housing

(not shown) of the distance measurement unit **12** has a rectangular parallelepiped shape.

[0172] The derivation unit **112** derives the direction of a plane specified by a plane equation showing a plane including three-dimensional coordinates on the real space which correspond to a plurality of pixel coordinates, on the basis of the plurality of pixel coordinates, a focal length of the imaging lens **50**, and the dimension of the imaging pixel **60**A**1**. The derivation unit **112** decides the plane equation on the basis of the derived direction of the plane and the emission position coordinates, and derives the an imaging position distance on the basis of the decided plane equation, the designated pixel coordinates, the focal length of the imaging lens **50**, and the dimension of the imaging pixel **60**A**1**.

[0173] Meanwhile, the plane equation which is used for the derivation of the imaging position distance is specified by the following Expression (3). Therefore, the derivation of the "direction of the plane" means that a, b, and c in Expression (3) are derived, and the fixedly deriving of the "plane equation" means that d in Expression (3) is derived to fixedly derive a, b, c, and d of the plane equation.

$$ax + by + cz + d = 0 \tag{3}$$

[0174] Next, operations of portions of the distance measurement device **10**A according to the technique of this disclosure will be described.

[0175] First, reference will be made to FIGS. **11** and **12** to describe an imaging position distance calculation process realized by the CPU **100** executing the imaging position distance calculation program **106** in a case where the three-dimensional coordinate calculation button **90**G is turned on.

[0176] Meanwhile, hereinafter, for convenience of description, a description will be given on the assumption that a region including an outer wall surface **121** of an office building **120** is included as a subject in an imaging range **119** of the imaging device **14** of the distance measurement device **10**A, as illustrated in FIG. **13** as an example. In addition, a description will be given on the assumption that the outer wall surface **121** is a main subject and is an object to be irradiated with a laser beam.

[0177] In addition, the outer wall surface **121** is formed to have a planar shape, and is an example of a planar region according to the technique of this disclosure. In addition, as illustrated in FIG. **13** as an example, a plurality of windows **122** having a quadrilateral shape are provided on the outer wall surface **121**. In addition, as illustrated in FIG. **13** as an example, a pattern **124** having a laterally long rectangular shape is drawn below each window **122** on the outer wall surface **121**. However, the invention is not limited thereto, and dirt attached to the outer wall surface **121**, a crack, or the like may be used.

[0178] Meanwhile, in this embodiment, the "planar shape" includes not only a plane but also a planar shape in a range allowing slight irregularities due to the window, a ventilating opening, or the like, and may be, for example, a plane or a planar shape which is recognized as a "planar shape" by visual observation or the existing image analysis technique.

[0179] In addition, hereinafter, for convenience of description, a description will be given on the assumption that a distance to the outer wall surface **121** is measured by the distance measurement device **10**A by a laser beam being emitted to the outer wall surface **121**. In addition, hereinafter, for convenience of description, the position of the distance measurement device **10**A in a case where the distance measurement unit **12** is positioned at a first measurement position and the imaging device **14** is positioned at a first imaging position will be referred to as a "first position". In addition, hereinafter, for convenience of description, the position of the distance measurement device **10**A in a case where the distance measurement unit **12** is positioned at a second measurement position and the imaging device **14** is positioned at a second imaging position will be referred to as a "second position".

[0180] In the imaging position distance calculation process illustrated in FIG. **11**, first, the acquisition unit **110** determines whether or not the measurement and imaging of a distance have been executed at the first position by the distance measurement device **10**A, in step **200**. The first position may be a position where the outer wall surface **121** can be irradiated with a laser beam and a region including the outer wall surface **121** can be imaged as a subject.

[0181] In a case where the measurement and imaging of a distance have not been executed at the first position by the distance measurement device **10**A in step **200**, the determination result is negative, and the process proceeds to step **201**. In a case where the measurement and imaging of a distance have been executed at the first position by the distance measurement device **10**A in step **200**, the determination result is positive, and the process proceeds to step **202**.

[0182] In step **201**, the acquisition unit **110** determines whether or not a condition for terminating the imaging position distance calculation process has been satisfied. The condition for terminating the imaging position distance calculation process refers to, for example, a condition that an instruction for terminating the imaging position distance calculation process is received by the touch panel **88** or a condition that the determination result is not positive after the start of the processing of step **200** and a first predetermined time elapses. Meanwhile, the first predetermined time refers to, for example, one minute.

[0183] In a case where the condition for terminating the imaging position distance calculation process has not been satisfied in step **201**, the determination result is negative, and the process proceeds to step **200**. In a case where the condition for terminating the imaging position distance calculation process has been satisfied in step **201**, the determination result is positive, and thus the imaging position distance calculation process is terminated.

[0184] In step **202**, the acquisition unit **110** acquires a distance measured at the first position and a first captured image signal indicating a first captured image obtained by executing imaging at the first position, and then the process proceeds to step **204**. Meanwhile, the first captured image is a captured image obtained by performing imaging in a focusing state at the first position.

[0185] In step **204**, the acquisition unit **110** displays the acquired first captured image indicated by the first captured image signal on the display unit **86** as illustrated in FIG. **14** as an example, and then the process proceeds to step **206**.

[0186] In step **206**, the acquisition unit **110** determines whether or not an attention pixel has been designated by a user from the first captured image through the touch panel **88**. Here, the attention pixel is equivalent to the above-

described first designated pixel. Meanwhile, the touch panel **88** receives pixel designation information (an example of second pixel designation information according to the technique of this disclosure) for designating two-dimensional coordinates corresponding to a pixel included in the first captured image among two-dimensional coordinates given to the touch panel **88**. Accordingly, it is determined in step **206** that an attention pixel has been designated in a case where the pixel designation information is received by the touch panel **88**. That is, a pixel corresponding to the two-dimensional coordinates designated in accordance with the pixel designation information is an attention pixel.

[0187] In step **206**, in a case where an attention pixel has not been designated by the user from the first captured image through the touch panel **88**, the determination result is negative, and the process proceeds to step **208**. In step **206**, in a case where an attention pixel has been designated by the user from the first captured image through the touch panel **88**, the determination result is positive, and the process proceeds to step **210**.

[0188] In step **208**, the acquisition unit **110** determines whether or not a condition for terminating the imaging position distance calculation process has been satisfied. In step **208**, in a case where the condition for terminating the imaging position distance calculation process has not been satisfied, the determination result is negative, and the process proceeds to step **206**. In step **208**, in a case where the condition for terminating the imaging position distance calculation process has been satisfied, the determination result is positive, and thus the imaging position distance calculation process is terminated.

[0189] In step **210**, the acquisition unit **110** acquires attention pixel coordinates for specifying an attention pixel **126** (see FIG. **14**) which is designated by the user through the touch panel **88** in the first captured image, and then the process proceeds to step **212**. Meanwhile, here, an example of the pixel designated by the user through the touch panel **88** is the attention pixel **126** as illustrated in FIG. **14** as an example. The attention pixel **126** is a pixel at the lower left corner in a front view of an image equivalent to a central window in a second floor of the outer wall surface in the first captured image, as illustrated in FIG. **14** as an example. The central window in the second floor of the outer wall surface indicates a central window **122** in a second floor of the office building **120** among the windows **122** provided on the outer wall surface **121** in the example illustrated in FIG. **13**. In addition, the attention pixel coordinates indicate two-dimensional coordinates for specifying the attention pixel **126** in the first captured image.

[0190] In step **212**, the acquisition unit **110** acquires three characteristic pixel coordinates for specifying three characteristic pixels in an outer wall surface image **128** (a hatched region in the example illustrated in FIG. **15**) in the first captured image, and then the process proceeds to step **214**. Meanwhile, the "three characteristic pixels" as mentioned herein is an example of "a plurality of pixels" and "a plurality of characteristic pixels" according to the technique of this disclosure.

[0191] Here, the outer wall surface image **128** refers to an image showing the outer wall surface **121** (see FIG. **13**) in the first captured image. The three characteristic pixels are pixels which are separated from each other by a predetermined number of pixels within the first captured image and are respectively present at three points specified in accordance with a fixed rule by image analysis on the basis of a spatial frequency and the like of an image equivalent to a pattern, a building material, or the like in the outer wall surface image **128**. For example, three pixels which show different apexes having a maximum spatial frequency within a circular region, which is fixed by a predetermined radius on the basis of the attention pixel **126**, and satisfy fixed conditions are extracted as three characteristic pixels. Meanwhile, the three characteristic pixel coordinates are equivalent to the above-described plurality of pixel coordinates.

[0192] In the example illustrated in FIG. **15**, the three characteristic pixels are a first pixel **130**, a second pixel **132**, and a third pixel **134**. The first pixel **130** is a pixel at the upper left corner in a front view of an image equivalent to a central window in the second floor of the outer wall surface in the outer wall surface image **128**. The second pixel **132** is a pixel at the upper right corner in a front view of the image equivalent to the central window in the second floor of the outer wall surface. The third pixel **134** is a pixel at the lower left corner in a front view of an image equivalent to the pattern **124** close to a lower portion of a central window in a third floor of the outer wall surface. Meanwhile, the central window in the third floor of the outer wall surface refers to a central window **122** in the third floor of the office building **120** among the windows **122** provided on the outer wall surface **121**, in the example illustrated in FIG. **13**.

[0193] In step **214**, the derivation unit **112** calculates emission position coordinates from the distance L, the half angle of view α, the emission angle β, and the distance between reference points M on the basis of Expression (2), and then the process proceeds to step **216**. The distance L used in the processing of step **214** refers to a distance to the subject which is measured at the first imaging position by the distance measurement device **10**A.

[0194] In step **216**, the derivation unit **112** displays a distance and emission position mark **136** on the display unit **86** so as to be superimposed on the first captured image as illustrated in FIG. **16** as an example, and then the process proceeds to step **218**.

[0195] The distance displayed by the execution of the processing of step **216** indicates a distance which is measured at the first imaging position by the distance measurement device **10**A, that is, the distance L which is used for the calculation of the emission position coordinates in the processing of step **214**. In the example illustrated in FIG. **16**, a numerical value of "133325.0" corresponds to the distance L which is measured at the first imaging position by the distance measurement device **10**A, and the unit is millimeter.

[0196] In the example illustrated in FIG. **16**, the emission position mark **136** is a mark indicating a position which is specified by the emission position coordinates calculated by the execution of the processing of step **214**.

[0197] In step **218** illustrated in FIG. **12**, the acquisition unit **110** determines whether or not imaging has been executed at the second position by the distance measurement device **10**A. The second position is a position of a moving destination of the distance measurement device **10**A, and may be a position where the outer wall surface **121** can be irradiated with a laser beam and a region including the outer wall surface **121** can be imaged as a subject.

[0198] In step **218**, in a case where imaging has not been executed at the second position by the distance measurement device **10**A, the determination result is negative, and the

process proceeds to step **220**. In step **218**, in a case where imaging has been executed at the second position by the distance measurement device **10**A, the determination result is positive, and the process proceeds to step **222**.

[0199] In step **220**, the acquisition unit **110** determines whether or not a condition for terminating the imaging position distance calculation process has been satisfied. In step **220**, in a case where the condition for terminating the imaging position distance calculation process has not been satisfied, the determination result is negative, and the process proceeds to step **218**. In step **220**, in a case where the condition for terminating the imaging position distance calculation process has been satisfied, the determination result is positive, and thus the imaging position distance calculation process is terminated.

[0200] In step **222**, the acquisition unit **110** acquires a second captured image signal indicating the second captured image obtained by executing imaging at the second position, and then the process proceeds to step **224**. Meanwhile, the second captured image is a captured image obtained by performing imaging in a focusing state at the second position.

[0201] In step **224**, the acquisition unit **110** displays the acquired second captured image indicated by the second captured image signal on the display unit **86**, and then the process proceeds to step **226**.

[0202] In step **226**, the acquisition unit **110** specifies a corresponding attention pixel which is a pixel corresponding to the attention pixel **126** among pixels included in the second captured image and acquires corresponding attention pixel coordinates for specifying the specified corresponding attention pixel, and then the process proceeds to step **228**. Meanwhile, here, the corresponding attention pixel coordinates refer to two-dimensional coordinates for specifying the corresponding attention pixel in the second captured image. In addition, the corresponding attention pixel is specified by executing the existing image analysis by using the first and second captured images as objects to be analyzed. Meanwhile, the corresponding attention pixel is equivalent to the above-described second designated pixel, and is uniquely specified from the second captured image by the execution of the processing of step **226** when the attention pixel **126** is specified from the first captured image.

[0203] In step **228**, the acquisition unit **110** specifies three characteristic pixels in an outer wall surface image corresponding to the outer wall surface image **128** (see FIG. **15**) in the second captured image and acquires corresponding characteristic pixel coordinates for specifying the specified three characteristic pixels, and then the process proceeds to step **230**. Meanwhile, the "three characteristic pixels" as mentioned herein is an example of "a plurality of pixels" and "a plurality of characteristic pixels" according to the technique of this disclosure. In addition, the corresponding characteristic pixel coordinates refer to two-dimensional coordinates for specifying the three characteristic pixels specified in the second captured image. In addition, the corresponding characteristic pixel coordinates are also two-dimensional coordinates corresponding to the three characteristic pixel coordinates acquired in the processing of step **212** in the second captured image, and are equivalent to the above-described plurality of pixel coordinates. In addition, the three characteristic pixels in the second captured image are specified by executing the existing image analysis by using the first and second captured images as objects to be analyzed, similar to the above-described method of specifying a corresponding attention pixel.

[0204] In step **230**, the derivation unit **112** derives a, b, and c of the plane equation shown in Expression (3) from the three characteristic pixel coordinates, the corresponding characteristic pixel coordinates, the focal length of the imaging lens **50**, and the dimension of the imaging pixel **60A1** to derive the direction of a plane specified by the plane equation.

[0205] Here, the three characteristic pixel coordinates are set to be (u_{L1}, v_{L1}), (u_{L2}, v_{L2}), and (u_{L3}, v_{L3}) and the corresponding characteristic pixel coordinates are set to be (u_{R1}, v_{R1}), (u_{R2}, v_{R2}), and (u_{R3}, v_{R3}), first to third characteristic pixel three-dimensional coordinates are specified by the following Expressions (4) to (6). The first characteristic pixel three-dimensional coordinates refer to three-dimensional coordinates corresponding to (u_{L1}, v_{L1}) and (u_{R1}, v_{R1}). The second characteristic pixel three-dimensional coordinates refer to three-dimensional coordinates corresponding to (u_{L2}, v_{L2}) and (u_{R2}, v_{R2}). The third characteristic pixel three-dimensional coordinates indicate three-dimensional coordinates corresponding to (u_{L3}, v_{L3}) and (u_{R3}, v_{R3}). Meanwhile, in Expression (4) to (6), "v_{R1}", "v_{R2}", and "v_{R3}" are not used.

first characteristic pixel three-dimensional coordinates: (4)

$$\left(\frac{B}{u_{L1}-u_{R1}}u_{L1},\ \frac{B}{u_{L1}-u_{R1}}v_{L1},\ \frac{B}{u_{L1}-u_{R1}}f\right)$$

second characteristic pixel three-dimensional coordinates: (5)

$$\left(\frac{B}{u_{L2}-u_{R2}}u_{L2},\ \frac{B}{u_{L2}-u_{R2}}v_{L2},\ \frac{B}{u_{L2}-u_{R2}}f\right)$$

third characteristic pixel three-dimensional coordinates: (6)

$$\left(\frac{B}{u_{L3}-u_{R3}}u_{L3},\ \frac{B}{u_{L3}-u_{R3}}v_{L3},\ \frac{B}{u_{L3}-u_{R3}}f\right)$$

[0206] In step **230**, the derivation unit **112** derives a, b, and c in Expression (3) by optimizing a, b, and c in Expression (3) from three expressions having an equivalence relationship obtained by substituting each of the first to third characteristic pixel three-dimensional coordinates shown in Expressions (4) to (6) for Expression (3). In this manner, the derivation of a, b, and c in Expression (3) means that the direction of the plane specified by the plane equation shown in Expression (3) is derived.

[0207] In step **232**, the derivation unit **112** decides the plane equation shown in Expression (3) on the basis of the emission position coordinates derived in the processing of step **214**, and then the process proceeds to step **234**. That is, in step **232**, the derivation unit **112** substitutes a, b, and c derived in the processing of step **230** and the emission position coordinates derived in the processing of step **214** for Expression (3) to decide d in Expression (3). Since a, b, and c in Expression (3) are derived in the processing of step **230**, the plane equation shown in Expression (3) is decided when d in Expression (3) is decided in the processing of step **232**.

[0208] In step **234**, the derivation unit **112** calculates an imaging position distance on the basis of the attention pixel coordinates, the corresponding attention pixel coordinates, the focal length of the imaging lens **50**, the dimension of the

imaging pixel **60A1**, the plane equation, and Expression (1), and then the process proceeds to step **236**.

[0209] Here, the attention pixel coordinates used in the processing of step **234** refer to the attention pixel coordinates acquired in the processing of step **210**. In addition, the corresponding attention pixel coordinates used in the processing of step **234** refer to the corresponding attention pixel coordinates acquired in the processing of step **226**. Further, the plane equation used in step **234** refers to the plane equation decided in step **232**.

[0210] Accordingly, in step **234**, (X, Y, Z) in Expression (1) for which the attention pixel coordinates, the corresponding attention pixel coordinates, the focal length of the imaging lens **50**, and the dimension of the imaging pixel **60A1** are substituted is substituted for the plane equation, and thus "B" which is an imaging position distance is derived.

[0211] Meanwhile, "B" which is an imaging position distance may be derived on the basis of the characteristic pixel three-dimensional coordinates and the plane equation decided in step **232**. That is, in this case, "B" which is an imaging position distance is derived by the characteristic pixel three-dimensional coordinates being substituted for the plane equation decided in step **232**. The "characteristic pixel three-dimensional coordinates" as mentioned herein refers to, for example, the first characteristic pixel three-dimensional coordinates. However, the invention is not limited thereto, and the characteristic pixel three-dimensional coordinates may be the second characteristic pixel three-dimensional coordinates or the third characteristic pixel three-dimensional coordinates.

[0212] In step **236**, the control unit **114** displays the imaging position distance calculated in the processing of step **234** on the display unit **86** so as to be superimposed on the second captured image, as illustrated in FIG. **17** as an example. In step **236**, the control unit **114** stores the imaging position distance calculated in the processing of step **234** in a predetermined storage region, and then terminates the imaging position distance calculation process. Meanwhile, an example of the predetermined storage region is a storage region of the primary storage unit **102** or a storage region of the secondary storage unit **104**.

[0213] Meanwhile, in the example illustrated in FIG. **17**, a numerical value of "144656.1" corresponds to the imaging position distance calculated in the processing of step **234**, and the unit is millimeter.

[0214] Next, reference will be made to FIG. **18** to describe the three-dimensional coordinate calculation process realized by the CPU **100** executing the three-dimensional coordinate calculation program **108** in a case where the three-dimensional coordinate calculation button **90G** is turned on.

[0215] In the three-dimensional coordinate calculation process illustrated in FIG. **18**, first, in step **250**, the derivation unit **112** determines whether or not an imaging position distance has been already calculated in the processing of step **234** included in the imaging position distance calculation process. In step **250**, in a case where an imaging position distance has not been calculated in the processing of step **234** included in the imaging position distance calculation process, the determination result is negative, and the process proceeds to step **258**. In step **250**, in a case where an imaging position distance has been already calculated in the processing of step **234** included in the imaging position distance calculation process, the determination result is positive, and the process proceeds to step **252**.

[0216] In step **252**, the derivation unit **112** determines whether or not a condition (hereinafter, referred to as a "calculation start condition") for starting the calculation of designated pixel three-dimensional coordinates has been satisfied. An example of the calculation start condition is a condition that an instruction for starting the calculation of the designated pixel three-dimensional coordinates is received by the touch panel **88**, or a condition that the imaging position distance is displayed on the display unit **86**.

[0217] In step **252**, in a case where the calculation start condition has not been satisfied, the determination result is negative, and the process proceeds to step **258**. In step **252**, in a case where the calculation start condition has been satisfied, the determination result is positive, and the process proceeds to step **254**.

[0218] In step **254**, the derivation unit **112** calculates designated pixel three-dimensional coordinates on the basis of the attention pixel coordinates, the corresponding attention pixel coordinates, the imaging position distance, the focal length of the imaging lens **50**, the dimension of the imaging pixel **60A1**, and Expression (1), and then the process proceeds to step **256**.

[0219] Here, the attention pixel coordinates used in the processing of step **254** refer to the attention pixel coordinates acquired in the processing of step **210** included in the imaging position distance calculation process. In addition, the corresponding attention pixel coordinates used in the processing of step **254** refer to the corresponding attention pixel coordinates acquired in the processing of step **226** included in the imaging position distance calculation process. In addition, the imaging position distance used in the processing of step **254** indicates the imaging position distance derived in the processing of step **234** included in the imaging position distance calculation process.

[0220] Accordingly, in step **254**, the designated pixel three-dimensional coordinates are calculated by substituting the attention pixel coordinates, the corresponding attention pixel coordinates, the imaging position distance, the focal length of the imaging lens **50**, and the dimension of the imaging pixel **60A1** for Expression (1).

[0221] In step **256**, the control unit **114** displays the designated pixel three-dimensional coordinates calculated in the processing of step **254** on the display unit **86** so as to be superimposed on the second captured image, as illustrated in FIG. **19** as an example. In step **256**, the control unit **114** stores the designated pixel three-dimensional coordinates calculated in the processing of step **254** in a predetermined storage region, and then terminates the three-dimensional coordinate calculation process. Meanwhile, an example of the predetermined storage region is a storage region of the primary storage unit **102** and a storage region of the secondary storage unit **104**.

[0222] Meanwhile, in the example illustrated in FIG. **19**, (20161, 50134, 136892) corresponds to the designated pixel three-dimensional coordinates calculated in the processing of step **254**. In the example illustrated in FIG. **19**, the designated pixel three-dimensional coordinates are displayed in proximity to the attention pixel **126**. Meanwhile, the attention pixel **126** may be emphatically displayed so as to be distinguishable from other pixels.

[0223] In step **258**, the derivation unit **112** determines whether or not a condition for terminating the three-dimen-

sional coordinate calculation process has been satisfied. An example of the condition for terminating the three-dimensional coordinate calculation process is a condition that an instruction for terminating the three-dimensional coordinate calculation process is received by the touch panel **88**. Another example of the condition for terminating the three-dimensional coordinate calculation process is a condition that the determination result is not positive in step **250** after the determination result is negative in step **250** and a second predetermined time elapses, and the like. Meanwhile, the second predetermined time refers to, for example, 30 minutes.

[0224] In step **258**, in a case where the condition for terminating the three-dimensional coordinate calculation process has not been satisfied, the determination result is negative, and the process proceeds to step **250**. In step **258**, in a case where the condition for terminating the three-dimensional coordinate calculation process has been satisfied, the determination result is positive, and thus the three-dimensional coordinate calculation process is terminated.

[0225] As described above, in the distance measurement device **10**A, the first captured image, the second captured image, and the distance to the subject are acquired by the acquisition unit **110**. In addition, the attention pixel **126** is designated in the first captured image by the user through the touch panel **88**, and attention pixel coordinates are acquired by the acquisition unit **110** (step **210**). In addition, corresponding attention pixel coordinates are acquired by the acquisition unit **110** (step **226**). In addition, three characteristic pixel coordinates are acquired by the acquisition unit **110** (step **212**). In addition, corresponding characteristic pixel coordinates are acquired by the acquisition unit **110** (step **228**). In addition, the emission position coordinates are calculated by the derivation unit **112** (step **214**). The imaging position distance is derived by the derivation unit **112** on the basis of the attention pixel coordinates, the corresponding attention pixel coordinates, the three characteristic pixel coordinates, corresponding characteristic pixel coordinates, the emission position coordinates, the focal length of the imaging lens **50**, and the dimension of the imaging pixel **60**A**1**.

[0226] Therefore, according to the distance measurement device **10**A, even when a characteristic location capable of being specified is not irradiated with a laser beam, it is possible to derive the imaging position distance on the basis of the first captured image and the second captured image which are obtained by respectively imaging the subject from the first imaging position and the second imaging position.

[0227] In the distance measurement device **10**A, designated pixel three-dimensional coordinates are calculated on the basis of the imaging position distance calculated in the imaging position distance calculation process (see FIG. **18**). Therefore, according to the distance measurement device **10**A, even when a characteristic location capable of being specified is not irradiated with a laser beam, the designated pixel three-dimensional coordinates can be derived.

[0228] In the distance measurement device **10**A, the designated pixel three-dimensional coordinates are specified on the basis of the attention pixel coordinates, the corresponding attention pixel coordinates, the imaging position distance, the focal length of the imaging lens **50**, and the dimension of the imaging pixel **60**A**1** (see Expression (1)). Therefore, according to the distance measurement device **10**A, it is possible to derive the designated pixel three-dimensional coordinates with a high level of accuracy, as compared to a case where the designated pixel three-dimensional coordinates are not specified on the basis of the attention pixel coordinates, the corresponding attention pixel coordinates, the imaging position distance, the focal length of the imaging lens **50**, and the dimension of the imaging pixel **60**A**1**.

[0229] In the distance measurement device **10**A, the direction of a plane specified by the plane equation shown in Expression (3) is derived by the derivation unit **112** on the basis of the three characteristic pixel coordinates, the corresponding characteristic pixel coordinates, the focal length of the imaging lens **50**, and the dimension of the imaging pixel **60**A**1** (step **230**). In addition, the plane equation shown in Expression (3) is decided by the derivation unit **112** on the basis of the direction of the plane and the emission position coordinates calculated in the processing of step **214** (step **232**). An imaging position distance is calculated by the derivation unit **112** on the basis of the decided plane equation, the attention pixel coordinates, the focal length of the imaging lens **50**, and the dimension of the imaging pixel **60**A**1** (step **234**). Therefore, according to the distance measurement device **10**A, it is possible to derive the imaging position distance with a high level of accuracy, as compared to a case where the imaging position distance is derived without using the plane equation when a characteristic location capable of being specified is not irradiated with a laser beam.

[0230] In the distance measurement device **10**A, three characteristic pixel coordinates are acquired by the acquisition unit **110** (step **212**), and corresponding characteristic pixel coordinates are acquired by the acquisition unit **110** (step **228**). An imaging position distance is calculated by the derivation unit **112** on the basis of the attention pixel coordinates, the corresponding attention pixel coordinates, the three characteristic pixel coordinates, the corresponding characteristic pixel coordinates, the emission position coordinates, the focal length of the imaging lens **50**, and the dimension of the imaging pixel **60**A**1** (steps **230** to **234**). Therefore, according to the distance measurement device **10**A, it is possible to derive the imaging position distance on the basis of the three characteristic pixel coordinates and the corresponding characteristic pixel coordinates with a small number of operations, as compared to a case where the user designates three characteristic pixels in acquiring the three characteristic pixel coordinates and the corresponding characteristic pixel coordinates.

[0231] In the distance measurement device **10**A, pixel designation information is received by the touch panel **88**, a pixel designated on the basis of the received pixel designation information is set to be the attention pixel **126**, and attention pixel coordinates are acquired by the acquisition unit **110** (step **210**). In addition, a corresponding attention pixel which is a pixel corresponding to the attention pixel **126** is specified by the acquisition unit **110**. Corresponding attention pixel coordinates for specifying the corresponding attention pixel are acquired by the acquisition unit **110** (step **226**). Therefore, according to the distance measurement device **10**A, it is possible to rapidly determine a designated pixel related to both the first captured image and the second captured image, as compared to a case where the designated pixel related to both the first captured image and the second captured image is designated by the user.

[0232] In addition, the distance measurement device **10**A includes the distance measurement unit **12** and the distance measurement control unit **68**, and a distance to the subject which is measured by the distance measurement unit **12** and the distance measurement control unit **68** is acquired by the acquisition unit **110**. Therefore, according to the distance measurement device **10**A, it is possible to easily acquire a distance to the subject which is used for the derivation of emission position coordinates, as compared to a case where the distance measurement device does not include the distance measurement unit **12** and the distance measurement control unit **68**.

[0233] In addition, the distance measurement device **10**A includes the imaging device **14**, and the first captured image and the second captured image which are obtained by imaging the subject by the imaging device **14** are acquired by the acquisition unit **110**. Therefore, according to the distance measurement device **10**A, it is possible to easily acquire the first captured image and the second captured image which are used to obtain the attention pixel coordinates, the three characteristic pixel coordinates, the corresponding attention pixel coordinates, and the corresponding characteristic pixel coordinates, as compared to a case where the distance measurement device does not include the imaging device **14**.

[0234] Further, in the distance measurement device **10**A, derivation results of the derivation unit **112** are displayed by the display unit **86**. Therefore, according to the distance measurement device **10**A, it is possible to make the user easily recognize the derivation results of the derivation unit **112**, as compared to a case where the derivation results of the derivation unit **112** are not displayed by the display unit **86**.

[0235] Meanwhile, in the first embodiment, the three characteristic pixel coordinates are described, but the technique of this disclosure is not limited thereto. For example, two-dimensional coordinates for specifying each of a predetermined number of pixels more than four characteristic pixels may be adopted instead of the three characteristic pixel coordinates.

[0236] In the first embodiment, a description has been given of a case where the attention pixel coordinates are acquired from coordinates on the first captured image and the corresponding attention pixel coordinates are acquired from coordinates on the second captured image, but the technique of this disclosure is not limited thereto. For example, the attention pixel coordinates may be acquired from the coordinates on the second captured image, and the corresponding attention pixel coordinates may be acquired from the coordinates on the first captured image.

[0237] In the first embodiment, a description has been given of a case where the three characteristic pixel coordinates are acquired from coordinates on the first captured image and the corresponding characteristic pixel coordinates are acquired from coordinates on the second captured image, but the technique of this disclosure is not limited thereto. For example, the three characteristic pixel coordinates may be acquired from the coordinates on the second captured image, and the corresponding characteristic pixel coordinates may be acquired from the coordinates on the first captured image.

[0238] In the first embodiment, a description has been given of a case where two-dimensional coordinates for specifying each of the first pixel **130**, the second pixel **132**, and the third pixel **134** are acquired by the acquisition unit **110** as three characteristic pixel coordinates, but the technique of this disclosure is not limited thereto. For example, as illustrated in FIG. **20**, two-dimensional coordinates for specifying each of a first pixel **130**A, a second pixel **132**A, and a third pixel **134**A may be acquired by the acquisition unit **110**. The first pixel **130**A, the second pixel **132**A, and the third pixel **134**A are three pixels for maximizing an area surrounded in the outer wall surface image **128**. Meanwhile, the invention is not limited to the three pixels, and the pixels may be a predetermined number of pixels more than three pixels for maximizing an area surrounded in the outer wall surface image **128**.

[0239] In this manner, in the example illustrated in FIG. **20**, three pixels for maximizing an area surrounded in the outer wall surface image **128** are specified as three characteristic pixels, and two-dimensional coordinates related to the specified the three pixels are acquired by the acquisition unit **110** as three characteristic pixel coordinates. In addition, corresponding characteristic pixel coordinates corresponding to the three characteristic pixel coordinates are also acquired by the acquisition unit **110**. Therefore, according to the distance measurement device **10**A, it is possible to derive an imaging position distance with a high level of accuracy, as compared to a case where three characteristic pixel coordinates for specifying a plurality of pixels not for maximizing an area surrounded and corresponding characteristic pixel coordinates are acquired as three characteristic pixels.

[0240] In the first embodiment, a description has been given of a case where the imaging position distance derivation process is realized when the three-dimensional coordinate calculation button **90**G is turned on, but the invention is not limited thereto. For example, the imaging position distance derivation process may be executed in a case where the imaging position distance calculation button **90**F is turned on. The imaging position distance derivation process described in the first embodiment is an example in a case where the derivation of three-dimensional coordinates is set to be the final purpose.

[0241] For this reason, attention pixel coordinates and corresponding pixel coordinates which are required in the derivation of three-dimensional coordinates are acquired through the imaging position distance derivation process. However, in a case where only the derivation of an imaging position distance is a purpose, it is not necessary to acquire attention pixel coordinates and corresponding pixel coordinates in the imaging position distance derivation process. Accordingly, the CPU **100** may derive the imaging position distance without acquiring the attention pixel coordinates and the corresponding attention pixel coordinates in a case where the imaging position distance calculation button **90**F is turned on, and may then acquire the attention pixel coordinates and the corresponding attention pixel coordinates in a case where the three-dimensional coordinate calculation button **90**G is turned on. In this case, the CPU **100** may acquire the attention pixel coordinates and the corresponding attention pixel coordinates, for example, between the processing of step **252** and the processing of step **254** of the three-dimensional coordinates derivation process illustrated in FIG. **34**, and may use the acquired attention pixel coordinates and corresponding attention pixel coordinates in the processing of step **254**.

Second Embodiment

[0242] In the first embodiment, a description has been given of a case where three characteristic pixel coordinates are acquired with respect to the entire outer wall surface image **128**. However, in a second embodiment, a description will be given of a case where three characteristic pixel coordinates are acquired with respect to a portion of the outer wall surface image **128**. Meanwhile, in the second embodiment, the same components as those described in the first embodiment will be denoted by the same reference numerals and signs, and a description thereof will be omitted.

[0243] A distance measurement device **10**B according to the second embodiment is different from the distance measurement device **10**A as illustrated in FIG. **6** as an example in that an imaging position distance calculation program **150** is stored in a secondary storage unit **104** instead of the imaging position distance calculation program **106**.

[0244] The CPU **100** executes the imaging position distance calculation program **150** and a three-dimensional coordinate calculation program **108** to be operated as an acquisition unit **154**, a derivation unit **112**, and a control unit **156** which is an example of each of a first control unit and a second control unit according to the technique of this disclosure (see FIG. **9**).

[0245] The acquisition unit **154** corresponds to the acquisition unit **110** described in the first embodiment, and the control unit **156** corresponds to the control unit **114** described in the first embodiment. Meanwhile, in the second embodiment, for convenience of description, different portions from the acquisition unit **110** and the control unit **114** described in the first embodiment will be described with regard to the acquisition unit **154** and the control unit **156**.

[0246] The control unit **156** performs control of displaying a first captured image on a display unit **86** and displaying an outer wall surface image **128**, which is an example of a corresponding region according to the technique of this disclosure, within a display region so as to be distinguishable from the other regions. A touch panel **88** receives region designation information for designating a coordinate acquisition target region **158** (see FIG. **22**) in a state where the outer wall surface image **128** is displayed on the display unit **86**. Here, the coordinate acquisition target region **158** refers to a partial closed region in the outer wall surface image **128**. The region designation information refers to information for designating the coordinate acquisition target region **158**.

[0247] The acquisition unit **154** acquires three characteristic pixel coordinates from the coordinate acquisition target region **158** designated in accordance with the region designation information received by the touch panel **88**.

[0248] Next, an imaging position distance calculation process realized by the CPU **100** executing the imaging position distance calculation program **150** will be described with reference to FIG. **21**, as the operation of portions of the distance measurement device **10**B according to the technique of this disclosure. Meanwhile, the same steps as those in the flowchart illustrated in FIG. **11** will be denoted by the same step numbers, and a description thereof will be omitted.

[0249] The flowchart illustrated in FIG. **21** is different from the flowchart illustrated in FIG. **11** in that steps **300** to **312** are provided instead of step **212**.

[0250] In step **300** illustrated in FIG. **21**, the control unit **156** specifies the outer wall surface image **128** (see FIG. **15**) from the first captured image, and then the process proceeds to step **302**.

[0251] In step **302**, the control unit **156** emphatically displays the outer wall surface image **128** specified in the processing of step **300** on the display unit **86** so as to be distinguishable from the other regions within the display region of the first captured image, and then the process proceeds to step **304**.

[0252] In step **304**, the acquisition unit **154** determines whether or not the region designation information has been received by the touch panel **88** and the coordinate acquisition target region **158** has been designated in accordance with the received region designation information.

[0253] In step **304**, in a case where the coordinate acquisition target region **158** has not been designated in accordance with the region designation information, the determination result is negative, and the process proceeds to step **306**. In step **304**, in a case where the coordinate acquisition target region **158** has been designated in accordance with the region designation information, the determination result is positive, and the process proceeds to step **308**.

[0254] In step **306**, the acquisition unit **154** determines whether or not a condition for terminating the imaging position distance calculation process has been satisfied. In step **306**, in a case where the condition for terminating the imaging position distance calculation process has not been satisfied, the determination result is negative, and the process proceeds to step **304**. In step **306**, in a case where the condition for terminating the imaging position distance calculation process has been satisfied, the determination result is positive, and thus the imaging position distance calculation process is terminated.

[0255] In step **308**, the acquisition unit **154** determines whether or not the coordinate acquisition target region **158** designated in accordance with the region designation information received by the touch panel **88** includes the three characteristic pixels described in the first embodiment.

[0256] As illustrated in FIG. **22** as an example, in a case where the coordinate acquisition target region **158** has been designated in accordance with the region designation information received by the touch panel **88**, the coordinate acquisition target region **158** includes a pattern image **160** showing a pattern **124** (see FIG. **13**).

[0257] In the example illustrated in FIG. **23**, the coordinate acquisition target region **158** includes a first pixel **162**, a second pixel **164**, and a third pixel **166** as three characteristic pixels. In the example illustrated in FIG. **23**, the first pixel **162** is a pixel at the upper left corner in a front view of the pattern image **160**, the second pixel **164** is a pixel at the lower left corner in a front view of the pattern image **160**, and the third pixel **166** is a pixel at the lower right corner in a front view of the pattern image **160**.

[0258] In step **308**, in a case where the coordinate acquisition target region **158** has been designated in accordance with the region designation information received by the touch panel **88** does not include three characteristic pixels, the determination result is negative, and the process proceeds to step **310**. In step **308**, in a case where the coordinate acquisition target region **158** has been designated in accordance with the region designation information received by the touch panel **88** includes three characteristic pixels, the determination result is positive, and the process proceeds to

step **312**. Meanwhile, the case where the determination result is positive in step **308** refers to a case where a region including the pattern image **160** has been designated in accordance with the region designation information received by the touch panel **88**, for example, as illustrated in FIG. **22**.

[0259] In step **310**, the control unit **156** displays a re-designation message on the display unit **86** so as to be superimposed on a predetermined region of the first captured image, and then the process proceeds to step **304**. The re-designation message refers to, for example, a message of "please designate a closed region including a characteristic pattern, a building material, and the like". Meanwhile, here, a case where the re-designation message is visibly displayed has been described. However, the technique of this disclosure is not limited thereto, and audible display such as the output of a sound using a sound reproducing device (not shown) or permanent visible display such as the output of printed matter using a printer may be performed instead of the visible display or may be performed in combination.

[0260] In step **312**, the acquisition unit **154** acquires three characteristic pixel coordinates for specifying three characteristic pixels in the coordinate acquisition target region designated in accordance with the region designation information received by the touch panel **88**, and then the process proceeds to step **214**. Meanwhile, in the example illustrated in FIG. **23**, the processing of step **312** is executed, and thus two-dimensional coordinates for specifying each of the first pixel **162**, the second pixel **164**, and the third pixel **166** are acquired by the acquisition unit **154** as three characteristic pixel coordinates.

[0261] As described above, in the distance measurement device **10**B, the outer wall surface image **128** is displayed on the display unit **86** so as to be distinguishable from the other regions in the first captured image. In addition, the region designation information is received by the touch panel **88**, and a coordinate acquisition target region which is a portion of the outer wall surface image **128** is designated in accordance with the received region designation information. In a case where the coordinate acquisition target region includes three characteristic pixels, the three characteristic pixel coordinates for specifying the three characteristic pixels are acquired by the acquisition unit **154** (step **312**), and corresponding characteristic pixel coordinates corresponding to the three characteristic pixel coordinates are also acquired (step **228**). Therefore, according to the distance measurement device **10**B, it is possible to acquire the three characteristic pixel coordinates and the corresponding characteristic pixel coordinates with a small load, as compared to a case where the three characteristic pixel coordinates and the corresponding characteristic pixel coordinates are acquired with respect to the entire outer wall surface image **128**.

Third Embodiment

[0262] In the above-described embodiments, a description has been given of a case where three characteristic pixels are searched for and specified within a specific image through-image analysis. However, in a third embodiment, a description will be given of a case where three characteristic pixels are designated in accordance with an operation to the touch panel **88**. Meanwhile, in the third embodiment, the same components as those described in the above-described embodiments will be denoted by the same reference numerals and signs, and a description thereof will be omitted.

[0263] A distance measurement device **10**C according to the third embodiment is different from the distance measurement device **10**A in that an imaging position distance calculation program **168** is stored in a secondary storage unit **104** instead of the imaging position distance calculation program **106**.

[0264] A CPU **100** executes the imaging position distance calculation program **168** and a three-dimensional coordinate calculation program **108** to be operated as an acquisition unit **172**, a derivation unit **174**, and a control unit **176** as illustrated in FIG. **9** as an example.

[0265] The acquisition unit **172** corresponds to the acquisition unit **110** (**154**) described in the above-described embodiments, the derivation unit **174** corresponds to the derivation unit **112** described in the first embodiment, and the control unit **176** corresponds to the control unit **114** (**156**) described in the above-described embodiments. Meanwhile, in the third embodiment, for convenience of description, different portions from the acquisition unit **110** (**154**), the derivation unit **112**, and the control unit **114** (**156**) described in the above-described embodiments will be described with regard to the acquisition unit **172**, the derivation unit **174**, and the control unit **176**.

[0266] The touch panel **88** receives the pixel designation information (first pixel designation information according to the technique of this disclosure) which is described in the first embodiment in a case where each of a first captured image and a second captured image is displayed on a display unit **86**. In addition, the touch panel **88** also receives the pixel designation information (first pixel designation information according to the technique of this disclosure) which is described in the first embodiment even when the second captured image is displayed on the display unit **86**.

[0267] In a case where the first captured image is displayed on the display unit **86**, the acquisition unit **110** acquires first characteristic pixel coordinates which are two-dimensional coordinates for specifying each of three characteristic pixels designated in accordance with the pixel designation information received by the touch panel **88**. The first characteristic pixel coordinates are two-dimensional coordinates corresponding to the three characteristic pixel coordinates described in the first embodiment.

[0268] In a case where the second captured image is displayed on the display unit **86**, the acquisition unit **110** acquires second characteristic pixel coordinates which are two-dimensional coordinates for specifying each of three characteristic pixels designated in accordance with the pixel designation information received by the touch panel **88**. The second characteristic pixel coordinates are two-dimensional coordinates corresponding to the corresponding characteristic pixel coordinates described in the first embodiment.

[0269] The derivation unit **174** derives an imaging position distance on the basis of attention pixel coordinates, corresponding attention pixel coordinates, first characteristic pixel coordinates, second characteristic pixel coordinates, emission position coordinates, a focal length of an imaging lens **50**, and a dimension of an imaging pixel **60A1**.

[0270] Next, an imaging position distance calculation process realized by the CPU **100** executing an imaging position distance calculation program **150** will be described with reference to FIGS. **24** and **25**, as the operation of portions of the distance measurement device **10**C according to the technique of this disclosure. Meanwhile, the same steps as

those in the flowchart illustrated in FIGS. **12** and **21** will be denoted by the same step numbers, and a description thereof will be omitted.

[0271] The flowchart illustrated in FIG. **24** is different from the flowchart illustrated in FIG. **21** in that step **349** is provided instead of step **304**. In addition, the flowchart illustrated in FIG. **24** is different from the flowchart illustrated in FIG. **21** in that steps **350** and **352** are provided instead of step **308**. In addition, the flowchart illustrated in FIG. **24** is different from the flowchart illustrated in FIG. **21** in that step **353** is provided instead of step **310**. In addition, the flowchart illustrated in FIG. **24** is different from the flowchart illustrated in FIG. **21** in that step **354** is provided instead of step **312**. Further, the flowchart illustrated in FIG. **25** is different from the flowchart illustrated in FIG. **12** in that steps **356** to **372** are provided instead of steps **228** and **230**.

[0272] In step **349**, the acquisition unit **154** determines whether or not the region designation information has been received by the touch panel **88** and a first coordinate acquisition target region **178** (see FIG. **22**) has been designated in accordance with the received region designation information. Meanwhile, the first coordinate acquisition target region **178** is a region corresponding to the coordinate acquisition target region described in the second embodiment.

[0273] In step **349**, in a case where the first coordinate acquisition target region **178** has not been designated in accordance with the region designation information, the determination result is negative, and the process proceeds to step **306**. In step **349**, in a case where the first coordinate acquisition target region **178** has been designated in accordance with the region designation information, the determination result is positive, and the process proceeds to step **350**.

[0274] In step **350**, the control unit **176** emphatically displays the first coordinate acquisition target region **178**, which is designated in accordance with the region designation information received by the touch panel, **88** on the display unit **86** so as to be distinguishable from the other regions within the display region of the first captured image, and then the process proceeds to step **352**.

[0275] In step **352**, the acquisition unit **172** determines whether or not three characteristic pixels have been designated in accordance with the pixel designation information received by the touch panel **88**.

[0276] As illustrated in FIG. **22** as an example, in a case where the first coordinate acquisition target region **178** has been designated in accordance with the region designation information received by the touch panel **88**, the first coordinate acquisition target region **178** includes a pattern image **160**. In this case, the three characteristic pixels refer to a first pixel **162**, a second pixel **164**, and a third pixel **166** which are pixels positioned at three corners of the pattern image **160**, as illustrated in FIG. **23** as an example.

[0277] In step **352**, in a case where the three characteristic pixels have not been designated in accordance with the pixel designation information received by the touch panel **88**, the determination result is negative, and the process proceeds to step **353**. In step **352**, in a case where the three characteristic pixels have been designated in accordance with the pixel designation information received by the touch panel **88**, the determination result is positive, and the process proceeds to step **354**.

[0278] In step **353**, the control unit **176** displays a re-designation message on the display unit **86** so as to be superimposed on a predetermined region of the first captured image, and then the process proceeds to step **349**. The re-designation message according to the third embodiment refers to, for example, a message of "please designate a closed region including a characteristic pattern, a building material, and the like and then designate three characteristic pixels".

[0279] In step **354**, the acquisition unit **172** acquires first characteristic pixel coordinates for specifying the three characteristic pixels designated in accordance with the pixel designation information received by the touch panel **88**, and then the process proceeds to step **214**. Meanwhile, in the example illustrated in FIG. **23**, the processing of step **354** is executed, and thus two-dimensional coordinates for specifying each of the first pixel **162**, the second pixel **164**, and the third pixel **166** are acquired by the acquisition unit **172** as the first characteristic pixel coordinates.

[0280] In step **356** illustrated in FIG. **25**, the control unit **176** specifies a corresponding outer wall surface image which is an outer wall surface image corresponding to the outer wall surface image **128** from the second captured image, and then the process proceeds to step **358**.

[0281] In step **358**, the control unit **176** emphatically displays the corresponding outer wall surface image specified in the processing of step **356** on the display unit **86** so as to be distinguishable from the other regions within a display region of the second captured image, and then the process proceeds to step **360**.

[0282] In step **360**, the acquisition unit **172** determines whether or not the region designation information has been received by the touch panel **88** and a second coordinate acquisition target region has been designated in accordance with the received region designation information. Meanwhile, the second coordinate acquisition target region is a region designated by the user through the touch panel **88** as a region corresponding to the first coordinate acquisition target region **178** (see FIG. **23**) in the second captured image.

[0283] In step **360**, in a case where the second coordinate acquisition target region has not been designated in accordance with the region designation information, the determination result is negative, and the process proceeds to step **362**. In step **360**, in a case where the second coordinate acquisition target region has been designated in accordance with the region designation information, the determination result is positive, and the process proceeds to step **364**.

[0284] In step **362**, the acquisition unit **172** determines whether or not a condition for terminating the imaging position distance calculation process has been satisfied. In step **362**, in a case where the condition for terminating the imaging position distance calculation process has not been satisfied, the determination result is negative, and the process proceeds to step **360**. In step **362**, in a case where the condition for terminating the imaging position distance calculation process has been satisfied, the determination result is positive, and thus the imaging position distance calculation process is terminated.

[0285] In step **364**, the control unit **176** emphatically displays the second coordinate acquisition target region, which is designated in accordance with the region designation information received by the touch panel **88**, on the display unit **86** so as to be distinguishable from the other

regions within the display region of the second captured image, and then the process proceeds to step **366**.

[0286] In step **366**, the acquisition unit **172** determines whether or not three characteristic pixels have been designated in accordance with the pixel designation information received by the touch panel **88**.

[0287] In a case where the second coordinate acquisition target region has been designated in accordance with the region designation information received by the touch panel **88**, the second coordinate acquisition target region includes a pattern image corresponding to the pattern image **160**. In this case, the three characteristic pixels are pixels positioned at three corners of the pattern image corresponding to the pattern image **160** in the second captured image. The pixels positioned at the three corners of the pattern image corresponding to the pattern image **160** refer to, for example, a pixel corresponding to the first pixel **162**, a pixel corresponding to the second pixel **164**, and a pixel corresponding to the third pixel in the second captured image.

[0288] In step **366**, in a case where the three characteristic pixels have not been designated in accordance with the pixel designation information received by the touch panel **88**, the determination result is negative, and the process proceeds to step **368**. In step **366**, in a case where the three characteristic pixels have been designated in accordance with the pixel designation information received by the touch panel **88**, the determination result is positive, and the process proceeds to step **370**.

[0289] In step **368**, the control unit **176** displays the re-designation message according to the third embodiment on the display unit **86** so as to be superimposed on a predetermined region of the second captured image, and then the process proceeds to step **360**.

[0290] In step **370**, the acquisition unit **172** acquires second characteristic pixel coordinates for specifying the three characteristic pixels designated in accordance with the pixel designation information received by the touch panel **88**, and then the process proceeds to step **372**. Meanwhile, in step **370**, two-dimensional coordinates for specifying each of the pixel corresponding to the first pixel **162**, the pixel corresponding to the second pixel **164**, and the pixel corresponding to the third pixel **166** are acquired by the acquisition unit **172** as the second characteristic pixel coordinates, for example, in the second captured image.

[0291] In step **372**, the derivation unit **174** derives a, b, and c of the plane equation shown in Expression (3) from the first characteristic pixel coordinates, the second characteristic pixel coordinates, the focal length of the imaging lens **50**, and the dimension of the imaging pixel **60A1** to derive the direction of a plane specified by the plane equation. Meanwhile, the first characteristic pixel coordinates used in the processing of step **372** are the first characteristic pixel coordinates acquired in the processing of step **354**, and are equivalent to the three characteristic pixel coordinates described in the first embodiment. In addition, the second characteristic pixel coordinates used in the processing of step **372** are the second characteristic pixel coordinates acquired in the processing of step **370**, and are equivalent to the corresponding characteristic pixel coordinates described in the first embodiment.

[0292] As described above, in the distance measurement device **10**C, the three characteristic pixels are designated through the touch panel **88** in the first captured image, and the first characteristic pixel coordinates for specifying the designated three characteristic pixels are acquired by the acquisition unit **172** (step **354**). In addition, the three characteristic pixels corresponding to the three characteristic pixels of the first captured image are designated through the touch panel **88** in the second captured image (step **366**: Y). In addition, the second characteristic pixel coordinates for specifying the three characteristic pixels designated through the touch panel **88** in the second captured image are acquired by the acquisition unit **172** (step **370**). An imaging position distance is calculated by the derivation unit **174** on the basis of the attention pixel coordinates, the corresponding attention pixel coordinates, the first characteristic pixel coordinates, the second characteristic pixel coordinates, the focus position coordinates, the focal length of the imaging lens **50**, and the dimension of the imaging pixel **60A1**. Therefore, according to the distance measurement device **10**C, it is possible to calculate the imaging position distance on the basis of the first characteristic pixel coordinates and the second characteristic pixel coordinates which are acquired in accordance with the user's intention.

Fourth Embodiment

[0293] In the above-described embodiments, a description has been given of a case where distance measurement is performed at a first position out of the first position and a second position, but a description will be given of a case where distance measurement is also performed at the second position in a fourth embodiment. Meanwhile, in the fourth embodiment, the same components as those described in the above-described embodiments will be denoted by the same reference numerals and signs, and a description thereof will be omitted.

[0294] A distance measurement device **10**D according to the fourth embodiment is different from the distance measurement device **10**A in that an imaging position distance calculation program **180** is stored in a secondary storage unit **104** instead of an imaging position distance calculation program **106**. In addition, the distance measurement device **10**D is different from the distance measurement device **10**A in that a three-dimensional coordinate calculation program **181** is stored in the secondary storage unit **104** instead of a three-dimensional coordinate calculation program **108**.

[0295] A CPU **100** executes the imaging position distance calculation program **180** and a three-dimensional coordinate calculation program **181** to be operated as an acquisition unit **182**, a derivation unit **184**, and a control unit **185** as illustrated in FIG. **9** as an example.

[0296] The acquisition unit **182** corresponds to the acquisition unit **154** described in the second embodiment, the derivation unit **184** corresponds to the derivation unit **112** described in the first embodiment, and the control unit **185** corresponds to the control unit **156** described in the second embodiment. Meanwhile, in the fourth embodiment, for convenience of description, different portions from the acquisition unit **154** described in the second embodiment will be described with regard to the acquisition unit **182**. In the fourth embodiment, for convenience of description, different portions from the derivation unit **112** described in the first embodiment will be described with regard to the derivation unit **184**. Further, in the fourth embodiment, for convenience of description, different portions from the control unit **156** described in the second embodiment will be described with regard to the control unit **185**.

[0297] The acquisition unit **182** further acquires a reference distance, as compared to the acquisition unit **154**. The "reference distance" as mentioned herein refers to a distance which is measured on the basis of a laser beam emitted by a distance measurement unit **12** at a second measurement position.

[0298] The derivation unit **184** derives a reference imaging position distance which is a distance between a first imaging position and a second imaging position, on the basis of attention pixel coordinates, three characteristic pixel coordinates, reference emission position coordinates, a focal length of an imaging lens **50**, and a dimension of an imaging pixel **60**A**1**. The derivation unit **184** adjusts the imaging position distance with reference to the derived reference imaging position distance to derive a final imaging position distance which is finally adopted as the distance between the first imaging position and the second imaging position.

[0299] In addition, the derivation unit **184** derives designated pixel three-dimensional coordinates on the basis of the derived final imaging position distance. The designated pixel three-dimensional coordinates according to the fourth embodiment are an example of final designated pixel real space coordinates according to the technique of this disclosure. The final designated pixel real space coordinates refer to three-dimensional coordinates which are finally adopted as the three-dimensional coordinates which are coordinates on the real space of an attention pixel (see step **206** illustrated in FIG. **21**) which is an example of a designated pixel according to the technique of this disclosure.

[0300] Next, an imaging position distance calculation process realized by the CPU **100** executing the imaging position distance calculation program **180** will be described with reference to FIG. **26**, as the operation of portions of the distance measurement device **10**D according to the technique of this disclosure. Meanwhile, the same steps as those in the flowchart illustrated in FIG. **12** will be denoted by the same step numbers, and a description thereof will be omitted.

[0301] The flowchart illustrated in FIG. **26** is different from the flowchart illustrated in FIG. **12** in that steps **400** and **402** are provided instead of steps **218** and **222**. In addition, the flowchart illustrated in FIG. **26** is different from the flowchart illustrated in FIG. **12** in that steps **404** to **416** are provided instead of steps **232** to **236**. In addition, the flowchart illustrated in FIG. **26** is also the continuation of the flowchart illustrated in FIG. **24**.

[0302] In step **400** illustrated in FIG. **26**, the acquisition unit **182** determines whether or not measurement and imaging of a distance at the second position have been executed by the distance measurement device **10**D. In step **400**, in a case where measurement and imaging of a distance at the second position have not been executed by the distance measurement device **10**D, the determination result is negative, and the process proceeds to step **220**. In step **400**, in a case where measurement and imaging of a distance at the second position have been executed by the distance measurement device **10**D, the determination result is positive, and the process proceeds to step **402**.

[0303] In step **402**, the acquisition unit **182** acquires a reference distance which is a distance measured at the second position and a second captured image signal indicating a second captured image which is obtained by performing imaging at the second position, and then the process proceeds to step **224**.

[0304] In step **404**, the derivation unit **184** decides a first plane equation which is the plane equation shown in Expression (3) on the basis of the emission position coordinates calculated in the processing of step **214**, and then the process proceeds to step **406**.

[0305] In step **406**, the derivation unit **184** calculates an imaging position distance on the basis of the attention pixel coordinates, the corresponding attention pixel coordinates, the focal length of the imaging lens **50**, the dimension of the imaging pixel **60**A**1**, the first plane equation, and Expression (1), and then the process proceeds to step **408**.

[0306] In step **408**, the derivation unit **184** calculates reference emission position coordinates on the basis of Expression (2) from the reference distance acquired by the acquisition unit **182** in the processing of step **402**, a half angle of view α, an emission angle β, and a distance between reference points M, and then the process proceeds to step **410**. Meanwhile, the reference distance used in the processing of step **408** is a distance corresponding to the distance L described in the first embodiment.

[0307] In step **410**, the derivation unit **184** decides a second plane equation which is the plane equation shown in Expression (3) on the basis of the reference emission position coordinates derived in the processing of step **408**, and then the process proceeds to step **412**. That is, in step **410**, the derivation unit **184** substitutes a, b, and c derived in the processing of step **230** and the reference emission position coordinates derived in the processing of step **408** for Expression (3) to decide d in Expression (3). Since a, b, and c in Expression (3) are derived in the processing of step **230**, the second plane equation is decided when d in Expression (3) is decided in the processing of step **410**.

[0308] In step **412**, the derivation unit **184** derives a reference imaging position distance on the basis of the attention pixel coordinates, the corresponding attention pixel coordinates, the focal length of the imaging lens **50**, the dimension of the imaging pixel **60**A**1**, the second plane equation, and Expression (1), and then the process proceeds to step **414**. Meanwhile, the reference imaging position distance is equivalent to "B" shown in Expression (1), and is calculated by substituting (X, Y, Z) in Expression (1), for which the attention pixel coordinates, the corresponding attention pixel coordinates, the focal length of the imaging lens **50**, and the dimension of the imaging pixel **60**A**1** are substituted, for the second plane equation.

[0309] In step **414**, the derivation unit **184** adjusts the imaging position distance calculated in the processing of step **406** with reference to the reference imaging position distance calculated in the processing of step **412** to calculate the final imaging position distance, and then the process proceeds to step **416**. Here, the adjustment of the imaging position distance refers to, for example, the obtainment of an average value between the imaging position distance and the reference imaging position distance, the multiplication of the average value between the imaging position distance and the reference imaging position distance and a first adjustment coefficient, or the multiplication of the imaging position distance and a second adjustment coefficient.

[0310] Meanwhile, both the first adjustment coefficient and the second adjustment coefficient are, for example, coefficients which are uniquely determined in accordance with the reference imaging position distance. The first adjustment coefficient is derived from, for example, a correspondence table in which the reference imaging position

distance and the first adjustment coefficient are associated with each other in advance, or a computational expression in which the reference imaging position distance is set to be an independent variable and the first adjustment coefficient is set to be a dependent variable. The second adjustment coefficient is similarly derived. The correspondence table and the computational expression are derived from a derivation table or a computational expression which is derived from results of experiment performed by the real machine of the distance measurement device **10**D or computer simulation based on design specifications of the distance measurement device **10**D at the stage before the shipment of the distance measurement device **10**D.

[0311] Accordingly, examples of the final imaging position distance include an average value between the imaging position distance and the reference imaging position distance, a value obtained by multiplying the average value between the imaging position distance and the reference imaging position distance by the first adjustment coefficient, and a value obtained by multiplying the imaging position distance by the second adjustment coefficient.

[0312] In step **416**, the control unit **185** displays the final imaging position distance calculated in the processing of step **414** on the display unit **86** so as to be superimposed on the second captured image, as illustrated in FIG. **27** as an example. In step **416**, the control unit **185** stores the final imaging position distance calculated in the processing of step **414** in a predetermined storage region, and then terminates the imaging position distance calculation process.

[0313] Next, reference will be made to FIG. **28** to describe a three-dimensional coordinate calculation process realized by the CPU **100** executing the three-dimensional coordinate calculation program **181** in a case where a three-dimensional coordinate calculation button **90**G is turned on.

[0314] In the three-dimensional coordinate calculation process illustrated in FIG. **28**, first, the derivation unit **184** determines whether or not the final imaging position distance has been already calculated in the processing of step **414** included in the imaging position distance calculation process, in step **450**. In step **450**, in a case where the final imaging position distance has not been calculated in the processing of step **414** included in the imaging position distance calculation process, the determination result is negative, and the process proceeds to step **458**. In step **450**, in a case where the final imaging position distance has been already calculated in the processing of step **414** included in the imaging position distance calculation process, the determination result is positive, and the process proceeds to step **458**.

[0315] In step **452**, the derivation unit **184** determines whether or not a calculation start condition has been satisfied. In step **452**, in a case where the calculation start condition has not been satisfied, the determination result is negative, and the process proceeds to step **458**. In step **452**, in a case where the calculation start condition has been satisfied, the determination result is positive, and the process proceeds to step **454**.

[0316] In step **454**, the derivation unit **184** calculates the designated pixel three-dimensional coordinates on the basis of the attention pixel coordinates, the corresponding attention pixel coordinates, the final imaging position distance, the focal length of the imaging lens **50**, the dimension of the imaging pixel **60**A**1**, and Expression (1), and then the process proceeds to step **456**.

[0317] Meanwhile, in step **454**, the designated pixel three-dimensional coordinates are calculated by substituting the attention pixel coordinates, the corresponding attention pixel coordinates, the final imaging position distance, the focal length of the imaging lens **50**, and the dimension of the imaging pixel **60**A**1** for Expression (1).

[0318] In step **456**, the control unit **185** displays the designated pixel three-dimensional coordinates calculated in the processing of step **454** on the display unit **86** so as to be superimposed on the second captured image, as illustrated in FIG. **29** as an example. In step **456**, the control unit **185** stores the designated pixel three-dimensional coordinates calculated in the processing of step **454** in a predetermined storage region, and then terminates the three-dimensional coordinate calculation process.

[0319] Meanwhile, in the example illustrated in FIG. **29**, (20160, 50132, 137810) corresponds to the designated pixel three-dimensional coordinates calculated in the processing of step **454**. In the example illustrated in FIG. **29**, the designated pixel three-dimensional coordinates are displayed in proximity to the attention pixel **126**.

[0320] In step **458**, the derivation unit **112** determines whether or not a condition for terminating the three-dimensional coordinate calculation process has been satisfied. In step **458**, in a case where the condition for terminating the three-dimensional coordinate calculation process has not been satisfied, the determination result is negative, and the process proceeds to step **450**. In step **458**, in a case where the condition for terminating the three-dimensional coordinate calculation process has been satisfied, the determination result is positive, and thus the three-dimensional coordinate calculation process is terminated.

[0321] As described above, in the distance measurement device **10**D, a distance from the second position to the subject is measured, and a reference distance which is the measured distance is acquired by the acquisition unit **182** (step **402**). In addition, the reference emission position coordinates are calculated by the derivation unit **184** on the basis of the reference distance (step **408**). In addition, the reference imaging position distance is calculated by the derivation unit **184** on the basis of the attention pixel coordinates, the corresponding attention pixel coordinates, the three characteristic pixel coordinates, the corresponding characteristic pixel coordinates, the reference emission position coordinates, the focal length of the imaging lens **50**, and the dimension of the imaging pixel **60**A**1** (step **406**). The imaging position distance is adjusted by the derivation unit **184** with reference to the reference imaging position distance, and thus the final imaging position distance is calculated (step **414**). Therefore, according to the distance measurement device **10**D, it is possible to calculate a distance between the first imaging position and the second imaging position with a high level of accuracy, as compared to a case where the reference imaging position distance is not used.

[0322] In the distance measurement device **10**D, the designated pixel three-dimensional coordinates are calculated on the basis of the final imaging position distance calculated in the imaging position distance calculation process (see FIG. **28**). Therefore, according to the distance measurement device **10**D, it is possible to calculate the designated pixel three-dimensional coordinates with a high level of accuracy, as compared to a case where the final imaging position distance is not used.

[0323] Further, in the distance measurement device **10**D, the designated pixel three-dimensional coordinates are specified on the basis of the attention pixel coordinates, the corresponding attention pixel coordinates, the final imaging position distance, the focal length of the imaging lens **50**, and the dimension of the imaging pixel **60A1** (see Expression (1)). Therefore, according to the distance measurement device **10**D, it is possible to derive the designated pixel three-dimensional coordinates with a high level of accuracy, as compared to a case where the designated pixel three-dimensional coordinates are not specified on the basis of the final imaging position distance, the attention pixel coordinates, the corresponding attention pixel coordinates, the focal length of the imaging lens **50**, and the dimension of the imaging pixel **60A1**.

[0324] Meanwhile, in the fourth embodiment, a distance measured on the basis of a laser beam emitted from the second position is set to be the reference distance, but the technique of this disclosure is not limited thereto. For example, a distance measured on the basis of a laser beam emitted from the first position may be set to be the reference distance.

Fifth Embodiment

[0325] In the above-described embodiments, a description has been given of a case where an imaging position distance and the like are derived by one distance measurement device, but a description will be given of a case where an imaging position distance and the like are derived by two of a distance measurement devices and a personal computer (hereinafter, referred to as a PC) in a fifth embodiment. Meanwhile, PC stands for a Personal Computer. Meanwhile, in the fifth embodiment, the same components as those described in the above-described embodiments will be denoted by the same reference numerals and signs, and a description thereof will be omitted.

[0326] As illustrated in FIG. **30** as an example, an information processing system **500** according to the fifth embodiment includes distance measurement devices **10**E**1** and **10**E**2**, and a PC **502**.

[0327] Meanwhile, in the fifth embodiment, the PC **502** can communicate with the distance measurement devices **10**E**1** and **10**E**2**. In the fifth embodiment, the PC **502** is an example of an information processing device according to the technique of this disclosure.

[0328] As illustrated in FIG. **30** as an example, the distance measurement device **10**E**1** is disposed at a first position, and the distance measurement device **10**E**2** is disposed at a second position different from the first position.

[0329] As illustrated in FIG. **31** as an example, the distance measurement devices **10**E**1** and **10**E**2** have the same configuration. Meanwhile, hereinafter, the distance measurement devices **10**E**1** and **10**E**2** will be referred to as a "distance measurement device **10**E" in a case where it is not necessary to give a description by distinguishing between the distance measurement devices.

[0330] The distance measurement device **10**E is different from the distance measurement device **10**A in that an imaging device **15** is provided instead of the imaging device **14**. The imaging device **15** is different from the imaging device **14** in that an imaging device main body **19** is provided instead of the imaging device main body **18**.

[0331] The imaging device main body **19** is different from the imaging device main body **18** in that a communication I/F **83** is provided. The communication I/F **83** is connected to a bus line **84**, and is operated under the control of a main control unit **62**.

[0332] The communication I/F **83** is connected to a communication network (not shown) such as the Internet, and transmits and receives various information to and from the PC **502** connected to the communication network.

[0333] As illustrated in FIG. **32** as an example, the PC **502** includes a main control unit **503**. The main control unit **503** includes a CPU **504**, a primary storage unit **506**, and a secondary storage unit **508**. The CPU **504**, the primary storage unit **506**, and the secondary storage unit **508** are connected to each other through a bus line **510**.

[0334] In addition, the PC **502** includes a communication I/F **512**. The communication I/F **512** is connected to the bus line **510**, and is operated under the control of the main control unit **503**. The communication I/F **512** is connected to the communication network, and transmits and receives various information to and from the distance measurement device **10**E connected to the communication network.

[0335] In addition, the PC **502** includes a reception unit **513** and a display unit **514**. The reception unit **513** is connected to the bus line **510** through a reception I/F (not shown), and the reception I/F outputs an instruction content signal indicating contents of an instruction received by the reception unit **513** to the main control unit **503**. Meanwhile, the reception unit **513** is realized by, for example, a keyboard, a mouse, and a touch panel.

[0336] The display unit **514** is connected to the bus line **510** through a display control unit (not shown), and displays various information under the control of the display control unit. Meanwhile, the display unit **514** is realized by, for example, an LCD.

[0337] The secondary storage unit **508** stores the imaging position distance calculation program **106** (**150**, **168**, **180**) and the three-dimensional coordinate calculation program **108** (**181**) which are described in the above-described embodiments. Meanwhile, hereinafter, for convenience of description, the imaging position distance calculation programs **106**, **150**, **168**, and **180** will be referred to as an "imaging position distance calculation program" without a reference numeral in a case where it is not necessary to give a description by distinguishing between the imaging position distance calculation programs. In addition, hereinafter, for convenience of description, the three-dimensional coordinate calculation programs **108** and **181** will be referred to as a "three-dimensional coordinate calculation program" without a reference numeral in a case where it is not necessary to give a description by distinguishing between the three-dimensional coordinate calculation programs.

[0338] The CPU **504** acquires a first captured image signal, attention pixel coordinates, a distance, and the like from the distance measurement device **10**E**1** through the communication I/F **512**. In addition, the CPU **504** acquires a second captured image signal and the like from the distance measurement device **10**E**2** through the communication I/F **512**.

[0339] The CPU **504** reads out the imaging position distance calculation program and the three-dimensional coordinate calculation program from the secondary storage unit **508** and develops the read-out imaging position distance calculation program and three-dimensional coordinate calculation program to the primary storage unit **506** to execute the imaging position distance calculation program and the

three-dimensional coordinate calculation program. Meanwhile, hereinafter, for convenience of description, the imaging position distance calculation program and the three-dimensional coordinate calculation program are collectively referred to as a "calculation program".

[0340] The CPU **100** executes the calculation programs to be operated as the acquisition unit **110** (**154**, **172**, **182**), the derivation unit **112** (**174**, **184**), and the control unit **114** (**156**, **176**, **185**).

[0341] Accordingly, in the information processing system **500**, the PC **502** acquires the first captured image signal, second captured image signal, the attention pixel coordinates, the distance, and the like from the distance measurement device **10**E through the communication I/F **512** and then executes the calculation programs, and thus the same operations and effects as those in the above-described embodiments are obtained.

Sixth Embodiment

[0342] In the first embodiment, a description has been given of a case where the distance measurement device **10**A is realized by the distance measurement unit **12** and the imaging device **14**, but a description will be given of a distance measurement device **10**F which is realized by further including a smart device **602** in a sixth embodiment. Meanwhile, in the sixth embodiment, the same components as those in the above-described embodiments will be denoted by the same reference numerals and signs, and a description thereof will be omitted, and only different portions from the above-described embodiments will be described.

[0343] As illustrated in FIG. **33** as an example, the distance measurement device **10**F according to the third embodiment is different from the distance measurement device **10**A according to the first embodiment in that an imaging device **600** is provided instead of the imaging device **14**. In addition, the distance measurement device **10**F is different from the distance measurement device **10**A in that a smart device **602** is provided.

[0344] The imaging device **600** is different from the imaging device **14** in that an imaging device main body **603** is provided instead of the imaging device main body **18**.

[0345] The imaging device main body **603** is different from the imaging device main body **18** in that a wireless communication unit **604** and a wireless communication antenna **606** are provided.

[0346] The wireless communication unit **604** is connected to a bus line **84** and the wireless communication antenna **606**. The main control unit **62** outputs transmission target information, which is information to be transmitted to the smart device **602**, to the wireless communication unit **604**.

[0347] The wireless communication unit **604** transmits the transmission target information, which is input from the main control unit **62**, to the smart device **602** by radio waves through the wireless communication antenna **606**. In addition, when the radio waves from the smart device **602** are received by the wireless communication antenna **606**, the wireless communication unit **604** acquires a signal based on the received radio waves, and outputs the acquired signal to the main control unit **62**.

[0348] The smart device **602** includes a CPU **608**, a primary storage unit **610**, and a secondary storage unit **612**. The CPU **608**, the primary storage unit **610**, and the secondary storage unit **612** are connected to a bus line **614**.

[0349] The CPU **608** controls the entire distance measurement device **10**F, inclusive of the smart device **602**. The primary storage unit **610** is a volatile memory which is used as a work area and the like during the execution of various programs. An example of the primary storage unit **610** is a RAM. The secondary storage unit **612** is a non-volatile memory that stores a control program for controlling the overall operation of the distance measurement device **10**F, various parameters, and the like, inclusive of the smart device **602**. An example of the secondary storage unit **612** is a flash memory or an EEPROM.

[0350] The smart device **142** includes a display unit **615**, a touch panel **616**, a wireless communication unit **618**, and a wireless communication antenna **620**.

[0351] The display unit **615** is connected to the bus line **614** through a display control unit (not shown), and displays various information under the control of the display control unit. Meanwhile, the display unit **615** is realized by, for example, an LCD.

[0352] The touch panel **616** is superimposed on a display screen of the display unit **615**, and receives a touch by an indicator. The touch panel **616** is connected to the bus line **614** through a touch panel I/F (not shown), and outputs positional information indicating a position touched by the indicator to the touch panel I/F. The touch panel I/F is operated in accordance with an instruction of the CPU **608**, and outputs the positional information, which is input from the touch panel **616**, to the CPU **608**.

[0353] Soft keys equivalent to a measurement and imaging button **90**A, an imaging button **90**B, an imaging system operation mode switching button **90**C, a wide angle instruction button **90**D, a telephoto instruction button **90**E, an imaging position distance calculation button **90**F, a three-dimensional coordinate calculation button **90**G, and the like are displayed on the display unit **615**.

[0354] For example, as illustrated in FIG. **34**, a measurement and imaging button **90A1** functioning as the measurement and imaging button **90**A is displayed on the display unit **615** as a soft key, and is pressed down by the user through the touch panel **616**. In addition, for example, an imaging button **90B1** functioning as the imaging button **90**B is displayed on the display unit **615** as a soft key, and is pressed down by the user through the touch panel **616**. In addition, for example, an imaging system operation mode switching button **90C1** functioning as the imaging system operation mode switching button **90**C is displayed on the display unit **615** as a soft key, and is pressed down by the user through the touch panel **616**.

[0355] In addition, for example, a wide angle instruction button **90D1** functioning as the wide angle instruction button **90**D is displayed on the display unit **615** as a soft key, and is pressed down by the user through the touch panel **616**. Further, for example, a telephoto instruction button **90E1** functioning as the telephoto instruction button **90**E is displayed on the display unit **615** as a soft key, and is pressed down by the user through the touch panel **616**.

[0356] In addition, for example, an imaging position distance calculation button **90F1** functioning as the imaging position distance calculation button **90**F is displayed on the display unit **615** as a soft key, and is pressed down by the user through the touch panel **616**. In addition, for example, a three-dimensional coordinate calculation button **90G1** functioning as the three-dimensional coordinate calculation

button **90**G is displayed on the display unit **615** as a soft key, and is pressed down by the user through the touch panel **616**.

[0357] The wireless communication unit **618** is connected to the bus line **614** and the wireless communication antenna **620**. The wireless communication unit **618** transmits a signal, which is input from the CPU **608**, to the imaging device main body **603** by radio waves through the wireless communication antenna **620**. In addition, when the radio waves are received by the wireless communication antenna **620** from the imaging device main body **603**, the wireless communication unit **618** acquires a signal based on the received radio waves and outputs the acquired signal to the CPU **608**. Therefore, the imaging device main body **603** is controlled by the smart device **602** through wireless communication performed between the smart device **602** and the imaging device main body **603**.

[0358] The secondary storage unit **612** stores a calculation program. The CPU **608** reads out the calculation program from the secondary storage unit **612** and develops the read-out calculation program to the primary storage unit **610** to execute the calculation program.

[0359] The CPU **608** executes the calculation program to be operated as the acquisition unit **110** (**154**, **172**, **182**), the derivation unit **112** (**174**, **184**), and the control unit **114** (**156**, **176**, **185**). For example, the CPU **608** executes the imaging position distance calculation program **106**, and thus the imaging position distance calculation process described in the first embodiment is realized. In addition, for example, the CPU **608** executes the three-dimensional coordinate calculation program **108**, and thus the three-dimensional calculation process described in the first embodiment is realized.

[0360] Therefore, in the distance measurement device **10**F, the smart device **602** executes the calculation program, and thus the same operations and effects as those in the above-described embodiments are obtained. In addition, according to the distance measurement device **10**F, it is possible to reduce a load applied to the imaging device **600** in obtaining the effects described in the above-described embodiments, as compared to a case where the imaging position distance calculation process and the three-dimensional calculation process are executed by the imaging device **600**.

[0361] Meanwhile, in the above-described embodiments, a corresponding attention pixel is specified by executing image analysis with a second captured image as an object to be analyzed, and corresponding attention pixel coordinates for specifying the specified corresponding attention pixel are acquired (see step **226** illustrated in FIG. **12**), but the technique of this disclosure is not limited thereto. For example, the user may designate a pixel corresponding to an attention pixel as the corresponding attention pixel from the second captured image through the touch panel **88**.

[0362] In the above-described embodiments, a description has been given of a case where the derivation unit **112** (**174**, **184**) calculates emission position coordinates, the direction of a plane, an imaging position distance, designated pixel three-dimensional coordinates, and the like by using a computational expression, but the technique of this disclosure is not limited thereto. For example, the derivation unit **112** (**174**, **184**) may calculate emission position coordinates, the direction of a plane, an imaging position distance, designated pixel three-dimensional coordinates, and the like by using a table in which an independent variable of the computational expression is set to be an input and a dependent variable of the computational expression is set to be an output.

[0363] In the above-described embodiments, a description has been given of a case where the calculation program is read out from the secondary storage unit **104** (**508**,**612**), but the calculation program is not necessarily stored in the secondary storage unit **104** (**508**,**612**) from the beginning. For example, as illustrated in FIG. **35**, the calculation program may be first stored in any portable storage medium **700** such as a Solid State Drive (SSD) or a Universal Serial Bus (USB) memory. In this case, the calculation program of the storage medium **700** is installed in the distance measurement device **10**A (**10**B, **10**C, **10**D, **10**F) (hereinafter, referred to as "distance measurement device **10**A and the like") or the PC **502**, and the installed calculation program is executed by the CPU **100** (**608**).

[0364] In addition, the calculation program may be stored in a storage unit of another computer or a server device connected to the distance measurement device **10**A and the like or the PC **502** through a communication network (not shown), and the calculation program may be downloaded in accordance with requests of the distance measurement device **10**A and the like. In this case, the downloaded calculation program is executed by the CPU **100** (**608**).

[0365] In the above-described embodiments, a description has been given of a case where various information such as an emission position mark **136**, an imaging position distance, and designated pixel three-dimensional coordinates is displayed on the display unit **86**, but the technique of this disclosure is not limited thereto. For example, various information may be displayed on a display unit of an external device which is used by being connected to the distance measurement device **10**A and the like or the PC **502**. An example of the external device is a PC or a spectacles-type or wristwatch type wearable terminal device.

[0366] In the above-described embodiments, a description has been given of a case where the emission position mark **136**, the imaging position distance, the designated pixel three-dimensional coordinates, and the like are visibly displayed by the display unit **86**, but the technique of this disclosure is not limited thereto. For example, audible display such as the output of a sound using a sound reproducing device or permanent visible display such as the output of printed matter using a printer may be performed instead of the visible display or may be performed in combination.

[0367] In the above-described embodiments, a description has been given of a case where the emission position mark **136**, the imaging position distance, the designated pixel three-dimensional coordinates, and the like are displayed on the display unit **86**, but the technique of this disclosure is not limited thereto. For example, at least one of the emission position mark **136**, the imaging position distance, the designated pixel three-dimensional coordinates, and the like may be displayed on a display unit (not shown) different from the display unit **86**, and the remainders may be displayed on the display unit **86**. The emission position mark **136**, the imaging position distance, the designated pixel three-dimensional coordinates, and the like may be individually displayed on a plurality of display units including the display unit **86**.

[0368] In the above-described embodiments, a laser beam has been described as light for distance measurement. However, the technique of this disclosure is not limited thereto, and a directional light which is directional light may be used. For example, the directional light may be directional light beam obtained by a Light Emitting Diode ((LED) or a Super Luminescent Diode ((SLD). It is preferable that directivity of the directional light beam is the same degree of directivity as that of the directivity of the laser beam and is usable in distance measurement, for example, within a range between several meters and several kilometers.

[0369] In addition, the imaging position distance calculation process and the three-dimensional coordinate calculation process described in the above-described embodiments are just examples. Therefore, it is needless to say that the deletion of unnecessary steps, the addition of new steps, and the change of processing order may be performed without departing from the scope of the invention. In addition, each processing included in the imaging position distance calculation process and the three-dimensional coordinate calculation process may be realized only by a hardware configuration such as ASIC, or may be realized by a combination of a software configuration and a hardware configuration using a computer

[0370] In the above-described embodiments, for convenience of description, a description has been given of a case where the distance measurement unit **12** is mounted on the side surface of the imaging device main body **18** included in the distance measurement device **10**A and the like, but the technique of this disclosure is not limited thereto. For example, the distance measurement unit **12** may be mounted on the upper surface or the lower surface of the imaging device main body **18**. In addition, for example, as illustrated in FIG. **36**, a distance measurement device **10**G may be applied instead of the distance measurement device **10**A and the like. As illustrated in FIG. **36** as an example, the distance measurement device **10**G is different from the distance measurement device **10**A and the like in that a distance measurement unit **12**A is provided instead of the distance measurement unit **12** and an imaging device main body **18**A is provided instead of the imaging device main body **18**.

[0371] In the example illustrated in FIG. **36**, the distance measurement unit **12**A is accommodated in a housing **18**A**1** of the imaging device main body **18**A, and objective lenses **32** and **38** are exposed from the housing **18**A**1** on the front side (a side where the imaging lens **50** is exposed) of the distance measurement device **10**G. In addition, it is preferable that the distance measurement unit **12**A is disposed such that optical axes L**1** and L**2** are set to be at the same height. Meanwhile, an opening (not shown) through which the distance measurement unit **12**A can be inserted into and removed from the housing **18**A**1** may be formed in the housing **18**A**1**.

[0372] Meanwhile, the half angle of view α used in the processing of step **214** included in the imaging position distance calculation process according to the first embodiment and the half angle of view α used in the processing of step **408** included in the imaging position distance calculation process according to the fourth embodiment are derived on the basis of the following Expression (7). In Expression (7), "f_0" denotes a focal length.

$$\alpha = a\tan\left\{\frac{(\text{dimension of imaging pixel})}{2 \times f_0}\right\} \tag{7}$$

[0373] All the documents, patent applications, and technical specifications described in the present specification are incorporated into the present specification by reference, to the same extent as in a case where the individual documents, patent applications, and technical specifications were specifically and individually described as being incorporated by reference.

[0374] With regard to the above-described embodiments, the following appendixes will be further disclosed.

APPENDIX 1

[0375] An information processing device including:

[0376] an acquisition unit that acquires a first captured image obtained by imaging a subject from a first imaging position, a second captured image obtained by imaging the subject from a second imaging position different from the first imaging position, and a distance from one of a position corresponding to the first imaging position and a position corresponding to the second imaging position to the subject, the distance being measured by emitting directional light, which has directivity, to the subject and receiving a reflected light of the directional light beam; and

[0377] a derivation unit that derives an imaging position distance which is a distance between the first imaging position and the second imaging position, on the basis of designated pixel coordinates which are coordinates for specifying designated pixels designated as pixels corresponding to a position on a real space in each of the first captured image and the second captured image which are acquired by the acquisition unit, a plurality of pixel coordinates being a plurality of coordinates for specifying a plurality of pixels of more than three pixels which are present in the same planar region as an emission position irradiated with the directional light beam on the real space and correspond to the position on the real space in each of the first captured image and the second captured image which are acquired by the acquisition unit, emission position coordinates which specifies the emission position on the real space and are derived on the basis of the distance acquired by the acquisition unit, a focal length of an imaging lens used for the imaging of the subject, and dimensions of imaging pixels included in an imaging pixel group for imaging the subject.

APPENDIX 2

[0378] The information processing device according to Appendix 1,

[0379] wherein the derivation unit derives designated pixel real space coordinates which are coordinates of the designated pixels on the real space on the basis of the derived imaging position distance.

APPENDIX 3

[0380] The information processing device according to Appendix 2,

[0381] wherein the designated pixel real space coordinates are specified on the basis of the imaging position

distance, the designated pixel coordinates, the focal length, and the dimensions.

APPENDIX 4

[0382] The information processing device according to any one of Appendixes 1 to 3,

[0383] wherein the derivation unit derives a direction of a plane, including coordinates on the real space which correspond to the plurality of pixel coordinates, which is specified by a plane equation indicating the plane on the basis of the plurality of pixel coordinates, the focal length, and the dimensions, decides the plane equation on the basis of the derived direction and the emission position coordinates, and derives the imaging position distance on the basis of the decided plane equation, the designated pixel coordinates, the focal length, and the dimensions.

APPENDIX 5

[0384] The information processing device according to any one of Appendixes 1 to 4,

[0385] wherein the plurality of pixels are designated by first pixel designation information for designating a pixel from each of the first captured image and the second captured image, the first pixel designation information being received by a first reception unit receiving the first pixel designation information, and

[0386] wherein the acquisition unit acquires a plurality of coordinates for specifying the plurality of pixels designated in accordance with the first pixel designation information as the plurality of pixel coordinates, and the derivation unit derives the imaging position distance on the basis of the designated pixel coordinates, the plurality of pixel coordinates acquired by the acquisition unit, the emission position coordinates, the focal length, and the dimensions.

APPENDIX 6

[0387] The information processing device according to any one of Appendixes 1 to 4,

[0388] wherein the acquisition unit acquires a plurality of coordinates, as the plurality of pixel coordinates, for specifying a plurality of characteristic pixels more than three pixels which are present in the same planar region as the emission position on the real space and correspond to the position on the real space in each of the first captured image and the second captured image, and

[0389] wherein the derivation unit derives the imaging position distance on the basis of the designated pixel coordinates, the plurality of pixel coordinates acquired by the acquisition unit, the emission position coordinates, the focal length, and the dimensions.

APPENDIX 7

[0390] The information processing device according to Appendix 6,

[0391] wherein the plurality of characteristic pixels are a predetermined number of pixels more than three pixels which are present in the same planar region as the emission position on the real space and correspond to the position on the real space in each of the first captured image and the second captured image, and are a plurality of pixels for maximizing an area surrounded.

APPENDIX 8

[0392] The information processing device according to Appendix 6, further including:

[0393] a first control unit that performs control of displaying at least one of the first captured image and the second captured image on a first display unit, and displaying a corresponding region corresponding to the same planar region as the emission position within a display region so as to be distinguishable from the other regions,

[0394] wherein the acquisition unit acquires a plurality of coordinates for specifying the plurality of characteristic pixels as the plurality of characteristic pixels coordinates, from a portion of the corresponding region designated in accordance with region designation information received by a second reception unit receiving the region designation information for designating a portion of the corresponding region in a state where the corresponding region is displayed on the first display unit.

APPENDIX 9

[0395] The information processing device according to any one of Appendixes 1 to 8,

[0396] wherein the designated pixel related to one of the first captured image and the second captured image is a pixel which is designated in accordance with second pixel designation information received by a third reception unit receiving the second pixel designation information for designating a pixel from one of the first captured image and the second captured image, and

[0397] wherein the designated pixel related to the other one of the first captured image and the second captured image is a pixel which is included in the other one of the first captured image and the second captured image and corresponds to a position of the pixel designated in accordance with the second pixel designation information on the real space.

APPENDIX 10

[0398] The information processing device according to any one of Appendixes 1 to 9, further including:

[0399] a measurement unit that measures the distance by emitting the directional light beam and receiving the reflected light,

[0400] wherein the acquisition unit acquires the distance measured by the measurement unit.

APPENDIX 11

[0401] The information processing device according to any one of Appendixes 1 to 10, further including:

[0402] an imaging unit that images the subject,

[0403] wherein the acquisition unit that acquires the first captured image obtained by imaging the subject by the imaging unit from the first imaging position, and the second captured image obtained by imaging the subject by the imaging unit from the second imaging position.

APPENDIX 12

[0404] The information processing device according to any one of Appendixes 1 to 11,

[0405] wherein the acquisition unit further acquires a reference distance to the subject which is measured by emitting the directional light beam to the subject from the other one of the position corresponding to the first imaging position and the position corresponding to the second imaging position and receiving the reflected light of the directional light beam,

[0406] wherein the derivation unit further derives a reference imaging position distance which is the distance between the first imaging position and the second imaging position on the basis of the designated pixel coordinates, the plurality of pixel coordinates, reference emission position coordinates for specifying the emission position on the real space and derived on the basis of the reference distance acquired by the acquisition unit, the focal length, and the dimensions, and adjusts the imaging position distance with reference to the derived reference imaging position distance to derive a final imaging position distance which is finally adopted as the distance between the first imaging position and the second imaging position.

APPENDIX 13

[0407] The information processing device according to Appendix 12,

[0408] wherein the derivation unit derives final designated pixel real space coordinates which are finally adopted as the coordinates of the designated pixels on the real space, on the basis of the derived final imaging position distance.

APPENDIX 14

[0409] The information processing device according to Appendix 13,

[0410] wherein the final designated pixel real space coordinates are specified on the basis of the final imaging position distance, the designated pixel coordinates, the focal length, and the dimensions.

APPENDIX 15

[0411] The information processing device according to any one of Appendixes 1 to 14, further including:

[0412] a second control unit that performs control of displaying derivation results of the derivation unit on a second display unit.

APPENDIX 16

[0413] An information processing method including:

[0414] acquiring a first captured image obtained by imaging a subject from a first imaging position, a second captured image obtained by imaging the subject from a second imaging position different from the first imaging position, and a distance from one of a position corresponding to the first imaging position and a position corresponding to the second imaging position to the subject, the distance being measured by emitting directional light, which has directivity, to the subject and receiving a reflected light of the directional light beam; and

[0415] deriving an imaging position distance which is a distance between the first imaging position and the second imaging position, on the basis of designated pixel coordinates which are coordinates for specifying designated pixels designated as pixels corresponding to a position on a real space in each of the acquired first captured image and second captured image, a plurality of pixel coordinates being a plurality of coordinates for specifying a plurality of pixels of more than three pixels which are present in the same planar region as an emission position irradiated with the directional light beam on the real space and correspond to the position on the real space in each of the acquired first captured image and second captured image, emission position coordinates which specifies the emission position on the real space and are derived on the basis of the acquired distance, a focal length of an imaging lens used for the imaging of the subject, and dimensions of imaging pixels included in an imaging pixel group for imaging the subject.

APPENDIX 17

[0416] A program causing a computer to execute processes of:

[0417] acquiring a first captured image obtained by imaging a subject from a first imaging position, a second captured image obtained by imaging the subject from a second imaging position different from the first imaging position, and a distance from one of a position corresponding to the first imaging position and a position corresponding to the second imaging position to the subject, the distance being measured by emitting directional light, which has directivity, to the subject and receiving a reflected light of the directional light beam; and

[0418] deriving an imaging position distance which is a distance between the first imaging position and the second imaging position, on the basis of designated pixel coordinates which are coordinates for specifying designated pixels designated as pixels corresponding to a position on a real space in each of the acquired first captured image and second captured image, a plurality of pixel coordinates being a plurality of coordinates for specifying a plurality of pixels of more than three pixels which are present in the same planar region as an emission position irradiated with the directional light beam on the real space and correspond to the position on the real space in each of the acquired first captured image and second captured image, emission position coordinates which specifies the emission position on the real space and are derived on the basis of the acquired distance, a focal length of an imaging lens used for the imaging of the subject, and dimensions of imaging pixels included in an imaging pixel group for imaging the subject.

What is claimed is:

1. An information processing device comprising:

a processor,

the processor is configured to:

acquire a first captured image obtained by imaging a subject from a first imaging position, a second captured image obtained by imaging the subject from a second imaging position different from the first imaging position, and a distance from one of a position correspond-

ing to the first imaging position or a position corresponding to the second imaging position to the subject, the distance being measured by emitting directional light, which has directivity, to the subject and receiving a reflected light of the directional light beam,

derive an imaging position distance, which is a distance between the first imaging position and the second imaging position, on the basis of a plurality of pixel coordinates, which are a plurality of coordinates for specifying a plurality of pixels of more than three pixels present in the same planar region as an emission position irradiated with the directional light beam on the real space and correspond to the position on the real space in each of the first captured image and the second captured image, emission position coordinates that specify the emission position on the real space and are derived on the basis of the distance, a focal length of an imaging lens used for the imaging of the subject, and dimensions of imaging pixels included in an imaging pixel group for imaging the subject, and

acquire the plurality of pixel coordinates by using a first coordinate acquisition target region to derive the imaging position distance.

2. The information processing device according to claim **1**,

wherein the processor is configured to emphatically display the first coordinate acquisition target region within the display region of the first captured image.

3. The information processing device according to claim **1**,

wherein the processor is configured to derive designated pixel real space coordinates, which are coordinates of designated pixels on the real space that are designated as pixels corresponding to the position on the real space in each of the first captured image and the second captured image, on the basis of the derived imaging position distance.

4. The information processing device according to claim **3**,

wherein the designated pixel real space coordinates are specified on the basis of the imaging position distance, the focal length, and the dimensions.

5. The information processing device according to claim **1**,

wherein the processor is configured to derive a direction of a plane, including coordinates on the real space which correspond to the plurality of pixel coordinates, which is specified by a plane equation indicating the plane on the basis of the plurality of pixel coordinates, the focal length, and the dimensions, to decide the plane equation on the basis of the derived direction and the emission position coordinates, and to derive the imaging position distance on the basis of the decided plane equation, the focal length, and the dimensions.

6. The information processing device according to claim **1**,

wherein the plurality of pixels are designated by first pixel designation information for designating a pixel from each of the first captured image and the second captured image, the first pixel designation information being received by a first reception device receiving the first pixel designation information,

wherein the processor is configured to:

acquire a plurality of coordinates for specifying the plurality of pixels designated in accordance with the first pixel designation information as the plurality of pixel coordinates, and

derive the imaging position distance on the basis of the plurality of pixel coordinates, the emission position coordinates, the focal length, and the dimensions.

7. The information processing device according to claim **1**,

wherein the processor is configured to:

acquire a plurality of coordinates, as the plurality of pixel coordinates, for specifying a plurality of characteristic pixels more than three pixels which are present in the same planar region as the emission position on the real space and correspond to the position on the real space in each of the first captured image and the second captured image, and

derive the imaging position distance on the basis of the plurality of pixel coordinates, the emission position coordinates, the focal length, and the dimensions.

8. The information processing device according to claim **7**,

wherein the plurality of characteristic pixels are a predetermined number of pixels of more than three pixels which are present in the same planar region as the emission position on the real space and correspond to the position on the real space in each of the first captured image and the second captured image, and are a plurality of pixels for maximizing an area surrounded.

9. The information processing device according to claim **7**,

wherein the processor is configured to:

perform control of displaying at least one of the first captured image or the second captured image on a first display, and displaying a corresponding region corresponding to the same planar region as the emission position within a display region so as to be distinguishable from the other regions, and

acquire a plurality of coordinates for specifying the plurality of characteristic pixels as the plurality of pixels coordinates, from a portion of the corresponding region designated in accordance with region designation information received by a second reception device receiving the region designation information for designating a portion of the corresponding region in a state where the corresponding region is displayed on the first display.

10. The information processing device according to claim **1**,

wherein the designated pixel, which is related to one of the first captured image or the second captured image among the designated pixels designated as a pixel corresponding to the position on the real space in each of the first captured image and the second captured image, is a pixel designated in accordance with second pixel designation information received by a third reception device receiving the second pixel designation information for designating a pixel from one of the first captured image or the second captured image, and

wherein the designated pixel related to the other one of the first captured image or the second captured image is a pixel which is included in the other one of the first captured image or the second captured image and

corresponds to a position of the pixel designated in accordance with the second pixel designation information on the real space.

11. The information processing device according to claim **1**,

wherein the processor is configured to:

measure the distance by emitting the directional light beam and receiving the reflected light, and

acquire the measured distance.

12. The information processing device according to claim **1**,

wherein the subject is imaged by an imaging device, and

the processor is configured to acquire the first captured image obtained by imaging the subject by the imaging device from the first imaging position, and the second captured image obtained by imaging the subject by the imaging device from the second imaging position.

13. The information processing device according to claim **1**,

wherein the processor is configured to:

acquire a reference distance to the subject which is measured by emitting the directional light beam to the subject from the other one of the position corresponding to the first imaging position or the position corresponding to the second imaging position and receiving the reflected light of the directional light beam, and

derive a reference imaging position distance which is the distance between the first imaging position and the second imaging position on the basis of the plurality of pixel coordinates, reference emission position coordinates for specifying the emission position on the real space and derived on the basis of the reference distance, the focal length, and the dimensions, and adjusts the imaging position distance with reference to the derived reference imaging position distance to derive a final imaging position distance which is finally adopted as the distance between the first imaging position and the second imaging position.

14. The information processing device according to claim **13**,

wherein the processor is configured to derive final designated pixel real space coordinates, which are finally adopted as the coordinates of the designated pixels on the real space which are designated as pixels corresponding to the position on the real space in each of the first captured image and the second captured image, on the basis of the derived final imaging position distance.

15. The information processing device according to claim **14**,

wherein the final designated pixel real space coordinates are specified on the basis of the final imaging position distance, the focal length, and the dimensions.

16. The information processing device according to claim **1**,

wherein derivation results by the processor are displayed on a second display.

17. An information processing method comprising:

acquiring a first captured image obtained by imaging a subject from a first imaging position, a second captured image obtained by imaging the subject from a second imaging position different from the first imaging position, and a distance from one of a position corresponding to the first imaging position or a position corresponding to the second imaging position to the subject, the distance being measured by emitting directional light, which has directivity, to the subject and receiving a reflected light of the directional light beam;

deriving an imaging position distance, which is a distance between the first imaging position and the second imaging position, on the basis of a plurality of pixel coordinates that are a plurality of coordinates for specifying a plurality of pixels of more than three pixels present in the same planar region as an emission position irradiated with the directional light beam on the real space and correspond to the position on the real space in each of the acquired first captured image and second captured image, emission position coordinates that specify the emission position on the real space and are derived on the basis of the acquired distance, a focal length of an imaging lens used for the imaging of the subject, and dimensions of imaging pixels included in an imaging pixel group for imaging the subject; and

acquiring the plurality of pixel coordinates by using a first coordinate acquisition target region to derive the imaging position distance.

18. A non-transitory computer-readable storage medium storing a program for causing a computer to execute a process comprising:

acquiring a first captured image obtained by imaging a subject from a first imaging position, a second captured image obtained by imaging the subject from a second imaging position different from the first imaging position, and a distance from one of a position corresponding to the first imaging position or a position corresponding to the second imaging position to the subject, the distance being measured by emitting directional light, which has directivity, to the subject and receiving a reflected light of the directional light beam;

deriving an imaging position distance, which is a distance between the first imaging position and the second imaging position, on the basis of a plurality of pixel coordinates that are a plurality of coordinates for specifying a plurality of pixels of more than three pixels present in the same planar region as an emission position irradiated with the directional light beam on the real space and correspond to the position on the real space in each of the acquired first captured image and second captured image, emission position coordinates that specify the emission position on the real space and are derived on the basis of the acquired distance, a focal length of an imaging lens used for the imaging of the subject, and dimensions of imaging pixels included in an imaging pixel group for imaging the subject; and

acquiring the plurality of pixel coordinates by using a first coordinate acquisition target region to derive the imaging position distance.

* * * * *