US012383259B2

(12) **United States Patent**
Harris et al.

(10) **Patent No.: US 12,383,259 B2**
(45) **Date of Patent: Aug. 12, 2025**

(54) **METHOD FOR CREATING A FLEXIBLE STAPLE LINE**

(71) Applicant: **Cilag GmbH International**, Zug (CH)

(72) Inventors: **Jason L. Harris**, Lebanon, OH (US); **Mark S. Zeiner**, Mason, OH (US); **Frederick E. Shelton, IV**, Hillsboro, OH (US)

(73) Assignee: **Cilag GmbH International**, Zug (CH)

(*) Notice: Subject to any disclaimer, the term of this patent is extended or adjusted under 35 U.S.C. 154(b) by 145 days.

(21) Appl. No.: **18/076,920**

(22) Filed: **Dec. 7, 2022**

(65) **Prior Publication Data**

US 2023/0165582 A1 Jun. 1, 2023

Related U.S. Application Data

(63) Continuation of application No. 16/411,411, filed on May 14, 2019, now Pat. No. 11,523,821, which is a

(Continued)

(51) **Int. Cl.**
A61B 17/068 (2006.01)
A61B 17/064 (2006.01)

(Continued)

(52) **U.S. Cl.**
CPC ***A61B 17/068*** (2013.01); ***A61B 17/0644*** (2013.01); ***A61B 17/0684*** (2013.01); ***A61B 17/072*** (2013.01); ***A61B 17/07207*** (2013.01); ***A61B 17/07292*** (2013.01); *A61B 2017/00004* (2013.01); *A61B 2017/00526* (2013.01); *A61B 2017/00884* (2013.01); *A61B 2017/00898* (2013.01); *A61B 2017/00942* (2013.01); *A61B 17/0682* (2013.01); *A61B 2017/0688* (2013.01);

(Continued)

(58) **Field of Classification Search**
CPC A61B 17/068; A61B 17/072; A61B 17/07207; A61B 17/0682; A61B 2017/07228; A61B 2017/07271; A61B 2017/07242
See application file for complete search history.

(56) **References Cited**

U.S. PATENT DOCUMENTS

66,052 A 6/1867 Smith
662,587 A 11/1900 Blake

(Continued)

FOREIGN PATENT DOCUMENTS

AU 2012200594 A1 2/2012
AU 2012203035 A1 6/2012

(Continued)

OTHER PUBLICATIONS

ASTM procedure D2240-00, "Standard Test Method for Rubber Property-Durometer Hardness," (Published Aug. 2000).

(Continued)

Primary Examiner — William H Matthews
(74) *Attorney, Agent, or Firm* — Frost Brown Todd LLP

(57) **ABSTRACT**

A method for creating a flexible fastener line is disclosed. The fastener line comprises fasteners oriented in directions which are transverse or oblique to a tissue incision created by a cutting member. The fasteners can translate and/or rotate within the tissue when the tissue is stretched thereby creating flexibility within the tissue.

14 Claims, 55 Drawing Sheets

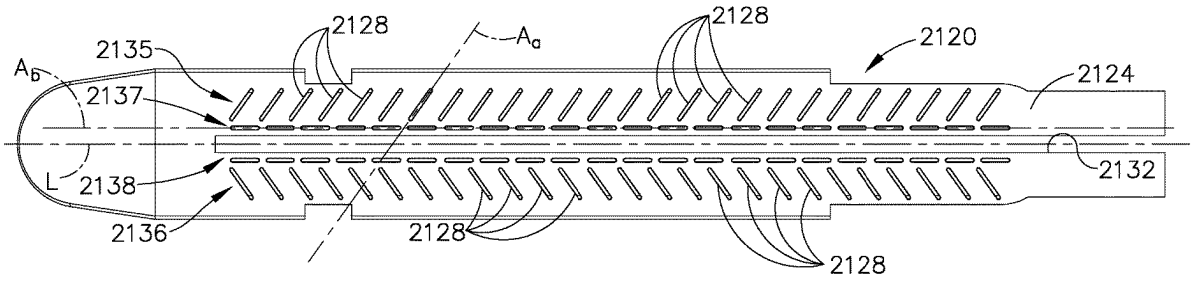

Related U.S. Application Data

continuation of application No. 14/498,145, filed on Sep. 26, 2014, now Pat. No. 10,327,764.

(51) **Int. Cl.**

A61B 17/072	(2006.01)
A61B 17/00	(2006.01)
A61B 17/10	(2006.01)
A61B 17/115	(2006.01)
A61B 17/122	(2006.01)
A61B 17/29	(2006.01)

(52) **U.S. Cl.**

CPC *A61B 2017/07214* (2013.01); *A61B 2017/07228* (2013.01); *A61B 2017/07235* (2013.01); *A61B 2017/07242* (2013.01); *A61B 2017/0725* (2013.01); *A61B 2017/07264* (2013.01); *A61B 2017/07271* (2013.01); *A61B 2017/07278* (2013.01); *A61B 17/105* (2013.01); *A61B 17/1155* (2013.01); *A61B 17/1222* (2013.01); *A61B 2017/2927* (2013.01)

(56) **References Cited**

U.S. PATENT DOCUMENTS

670,748	A	3/1901	Weddeler
719,487	A	2/1903	Minor
804,229	A	11/1905	Hutchinson
903,739	A	11/1908	Lesemann
951,393	A	3/1910	Hahn
1,075,556	A	10/1913	Fenoughty
1,082,105	A	12/1913	Anderson
1,188,721	A	6/1916	Bittner
1,306,107	A	6/1919	Elliott
1,314,601	A	9/1919	McCaskey
1,466,128	A	8/1923	Hallenbeck
1,677,337	A	7/1928	Grove
1,794,907	A	3/1931	Kelly
1,849,427	A	3/1932	Hook
1,912,783	A	6/1933	Meyer
1,944,116	A	1/1934	Stratman
1,954,048	A	4/1934	Jeffrey et al.
2,028,635	A	1/1936	Wappler
2,037,727	A	4/1936	La Chapelle
2,120,951	A	6/1938	Hodgman
2,132,295	A	10/1938	Hawkins
2,161,632	A	6/1939	Nattenheimer
D120,434	S	5/1940	Gold
2,211,117	A	8/1940	Hess
2,214,870	A	9/1940	West
2,224,108	A	12/1940	Ridgway
2,224,882	A	12/1940	Peck
2,256,295	A	9/1941	Schmid
2,318,379	A	5/1943	Davis et al.
2,329,440	A	9/1943	La Place
2,377,581	A	6/1945	Shaffrey
2,406,389	A	8/1946	Lee
2,420,552	A	5/1947	Morrill
2,441,096	A	5/1948	Happe
2,448,741	A	9/1948	Scott et al.
2,450,527	A	10/1948	Smith
2,491,872	A	12/1949	Neuman
2,507,872	A	5/1950	Unsinger
2,526,902	A	10/1950	Rublee
2,527,256	A	10/1950	Jackson
2,578,686	A	12/1951	Fish
2,638,901	A	5/1953	Sugarbaker
2,674,149	A	4/1954	Benson
2,701,489	A	2/1955	Osborn
2,711,461	A	6/1955	Happe
2,724,289	A	11/1955	Wight
2,742,955	A	4/1956	Dominguez
2,804,848	A	9/1957	O'Farrell et al.
2,808,482	A	10/1957	Zanichkowsky et al.
2,825,178	A	3/1958	Hawkins
2,853,074	A	9/1958	Olson
2,856,192	A	10/1958	Schuster
2,887,004	A	5/1959	Stewart
2,957,353	A	10/1960	Lewis
2,959,974	A	11/1960	Emrick
3,026,744	A	3/1962	Rouse
3,032,769	A	5/1962	Palmer
3,035,256	A	5/1962	Egbert
3,060,972	A	10/1962	Sheldon
3,075,062	A	1/1963	Iaccarino
3,078,465	A	2/1963	Bobrov
3,079,606	A	3/1963	Bobrov et al.
3,080,564	A	3/1963	Strekopitov et al.
3,166,072	A	1/1965	Sullivan, Jr.
3,180,236	A	4/1965	Beckett
3,196,869	A	7/1965	Scholl
3,204,731	A	9/1965	Bent et al.
3,252,643	A	5/1966	Strekopytov et al.
3,266,494	A	8/1966	Brownrigg et al.
3,269,630	A	8/1966	Fleischer
3,269,631	A	8/1966	Takaro
3,275,211	A	9/1966	Hirsch et al.
3,315,863	A	4/1967	O'Dea
3,317,103	A	5/1967	Cullen et al.
3,317,105	A	5/1967	Astafjev et al.
3,357,296	A	12/1967	Lefever
3,359,978	A	12/1967	Smith, Jr.
3,377,893	A	4/1968	Shorb
3,480,193	A	11/1969	Ralston
3,490,675	A	1/1970	Green et al.
3,494,533	A	2/1970	Green et al.
3,499,591	A	3/1970	Green
3,503,396	A	3/1970	Pierie et al.
3,509,629	A	5/1970	Kidokoro
3,551,987	A	1/1971	Wilkinson
3,568,675	A	3/1971	Harvey
3,572,159	A	3/1971	Tschanz
3,583,393	A	6/1971	Takahashi
3,589,589	A	6/1971	Akopov
3,598,943	A	8/1971	Barrett
3,604,561	A	9/1971	Mallina et al.
3,608,549	A	9/1971	Merrill
3,616,278	A	10/1971	Jansen
3,618,842	A	11/1971	Bryan
3,635,394	A	1/1972	Natelson
3,638,652	A	2/1972	Kelley
3,640,317	A	2/1972	Panfili
3,643,851	A	2/1972	Green et al.
3,650,453	A	3/1972	Smith, Jr.
3,661,339	A	5/1972	Shimizu
3,661,666	A	5/1972	Foster et al.
3,662,939	A	5/1972	Bryan
3,685,250	A	8/1972	Henry et al.
3,688,966	A	9/1972	Perkins et al.
3,692,224	A	9/1972	Astafiev et al.
3,695,646	A	10/1972	Mommsen
3,709,221	A	1/1973	Riely
3,717,294	A	2/1973	Green
3,724,237	A	4/1973	Wood
3,726,755	A	4/1973	Shannon
3,727,904	A	4/1973	Gabbey
3,734,207	A	5/1973	Fishbein
3,740,994	A	6/1973	De Carlo, Jr.
3,744,495	A	7/1973	Johnson
3,746,002	A	7/1973	Haller
3,747,603	A	7/1973	Adler
3,747,692	A	7/1973	Davidson
3,751,902	A	8/1973	Kingsbury et al.
3,752,161	A	8/1973	Bent
3,797,494	A	3/1974	Zaffaroni
3,799,151	A	3/1974	Fukaumi et al.
3,808,452	A	4/1974	Hutchinson
3,815,476	A	6/1974	Green et al.
3,819,100	A	6/1974	Noiles et al.
3,821,919	A	7/1974	Knohl
3,822,818	A	7/1974	Strekopytov et al.
3,825,007	A	7/1974	Rand
3,826,978	A	7/1974	Kelly

(56) **References Cited**

U.S. PATENT DOCUMENTS

3,836,171 A 9/1974 Hayashi et al.
3,837,555 A 9/1974 Green
3,841,474 A 10/1974 Maier
3,851,196 A 11/1974 Hinds
3,863,639 A 2/1975 Kleaveland
3,863,940 A 2/1975 Cummings
3,883,624 A 5/1975 McKenzie et al.
3,885,491 A 5/1975 Curtis
3,887,393 A 6/1975 La Rue, Jr.
3,892,228 A 7/1975 Mitsui
3,894,174 A 7/1975 Cartun
3,899,829 A 8/1975 Storm et al.
3,902,247 A 9/1975 Fleer et al.
3,940,844 A 3/1976 Colby et al.
3,944,163 A 3/1976 Hayashi et al.
3,950,686 A 4/1976 Randall
3,952,747 A 4/1976 Kimmell, Jr.
3,955,581 A 5/1976 Spasiano et al.
3,959,879 A 6/1976 Sellers
RE28,932 E 8/1976 Noiles et al.
3,972,734 A 8/1976 King
3,973,179 A 8/1976 Weber et al.
3,981,051 A 9/1976 Brumlik
3,999,110 A 12/1976 Ramstrom et al.
4,025,216 A 5/1977 Hives
4,027,746 A 6/1977 Kine
4,034,143 A 7/1977 Sweet
4,038,987 A 8/1977 Komiya
4,047,654 A 9/1977 Alvarado
4,054,108 A 10/1977 Gill
4,060,089 A 11/1977 Noiles
4,066,133 A 1/1978 Voss
4,085,337 A 4/1978 Moeller
4,100,820 A 7/1978 Evett
4,106,446 A 8/1978 Yamada et al.
4,106,620 A 8/1978 Brimmer et al.
4,108,211 A 8/1978 Tanaka
4,111,206 A 9/1978 Vishnevsky et al.
4,127,227 A 11/1978 Green
4,129,059 A 12/1978 Van Eck
4,132,146 A 1/1979 Uhlig
4,135,517 A 1/1979 Reale
4,149,461 A 4/1979 Simeth
4,154,122 A 5/1979 Severin
4,160,857 A 7/1979 Nardella et al.
4,169,476 A 10/1979 Hiltebrandt
4,169,990 A 10/1979 Lerdman
4,180,285 A 12/1979 Reneau
4,185,701 A 1/1980 Boys
4,190,042 A 2/1980 Sinnreich
4,198,734 A 4/1980 Brumlik
4,198,982 A 4/1980 Fortner et al.
4,203,444 A 5/1980 Bonnell et al.
4,207,898 A 6/1980 Becht
4,213,562 A 7/1980 Garrett et al.
4,226,242 A 10/1980 Jarvik
4,239,431 A 12/1980 Davini
4,241,861 A 12/1980 Fleischer
4,244,372 A 1/1981 Kapitanov et al.
4,250,436 A 2/1981 Weissman
4,250,817 A 2/1981 Michel
4,261,244 A 4/1981 Becht et al.
4,272,002 A 6/1981 Moshofsky
4,272,662 A 6/1981 Simpson
4,274,304 A 6/1981 Curtiss
4,274,398 A 6/1981 Scott, Jr.
4,275,813 A 6/1981 Noiles
4,278,091 A 7/1981 Borzone
4,282,573 A 8/1981 Imai et al.
4,289,131 A 9/1981 Mueller
4,289,133 A 9/1981 Rothfuss
4,290,542 A 9/1981 Fedotov et al.
D261,356 S 10/1981 Robinson
4,293,604 A 10/1981 Campbell
4,296,654 A 10/1981 Mercer
4,296,881 A 10/1981 Lee
4,304,236 A 12/1981 Conta et al.
4,305,539 A 12/1981 Korolkov et al.
4,312,363 A 1/1982 Rothfuss et al.
4,312,685 A 1/1982 Riedl
4,317,451 A 3/1982 Cerwin et al.
4,319,576 A 3/1982 Rothfuss
4,321,002 A 3/1982 Froehlich
4,321,746 A 3/1982 Grinage
4,328,839 A 5/1982 Lyons et al.
4,331,277 A 5/1982 Green
4,340,331 A 7/1982 Savino
4,347,450 A 8/1982 Colligan
4,348,603 A 9/1982 Huber
4,349,028 A 9/1982 Green
4,350,151 A 9/1982 Scott
4,353,371 A 10/1982 Cosman
4,357,940 A 11/1982 Muller
4,361,057 A 11/1982 Kochera
4,366,544 A 12/1982 Shima et al.
4,369,013 A 1/1983 Abildgaard et al.
4,373,147 A 2/1983 Carlson, Jr.
4,376,380 A 3/1983 Burgess
4,379,457 A 4/1983 Gravener et al.
4,380,312 A 4/1983 Landrus
4,382,326 A 5/1983 Rabuse
4,383,634 A 5/1983 Green
4,389,963 A 6/1983 Pearson
4,393,728 A 7/1983 Larson et al.
4,394,613 A 7/1983 Cole
4,396,139 A 8/1983 Hall et al.
4,397,311 A 8/1983 Kanshin et al.
4,402,445 A 9/1983 Green
4,406,621 A 9/1983 Bailey
4,408,692 A 10/1983 Sigel et al.
4,409,057 A 10/1983 Molenda et al.
4,415,112 A 11/1983 Green
4,416,276 A 11/1983 Newton et al.
4,417,890 A 11/1983 Dennehey et al.
4,421,264 A 12/1983 Arter et al.
4,423,456 A 12/1983 Zaidenweber
4,425,915 A 1/1984 Ivanov
4,428,376 A 1/1984 Mericle
4,429,695 A 2/1984 Green
4,430,997 A 2/1984 DiGiovanni et al.
4,434,796 A 3/1984 Karapetian et al.
4,438,659 A 3/1984 Desplats
4,442,964 A 4/1984 Becht
4,448,194 A 5/1984 DiGiovanni et al.
4,451,743 A 5/1984 Suzuki et al.
4,452,376 A 6/1984 Klieman et al.
4,454,887 A 6/1984 Kruger
4,459,519 A 7/1984 Erdman
4,461,305 A 7/1984 Cibley
4,467,805 A 8/1984 Fukuda
4,468,597 A 8/1984 Baumard et al.
4,469,481 A 9/1984 Kobayashi
4,470,414 A 9/1984 Imagawa et al.
4,471,780 A 9/1984 Menges et al.
4,471,781 A 9/1984 Di Giovanni et al.
4,473,077 A 9/1984 Noiles et al.
4,475,679 A 10/1984 Fleury, Jr.
4,476,864 A 10/1984 Tezel
4,478,220 A 10/1984 Di Giovanni et al.
4,480,641 A 11/1984 Failla et al.
4,481,458 A 11/1984 Lane
4,483,562 A 11/1984 Schoolman
4,485,816 A 12/1984 Krumme
4,485,817 A 12/1984 Swiggett
4,486,928 A 12/1984 Tucker et al.
4,488,523 A 12/1984 Shichman
4,489,875 A 12/1984 Crawford et al.
4,493,983 A 1/1985 Taggert
4,494,057 A 1/1985 Hotta
4,499,895 A 2/1985 Takayama
4,500,024 A 2/1985 DiGiovanni et al.
D278,081 S 3/1985 Green
4,503,842 A 3/1985 Takayama
4,505,272 A 3/1985 Utyamyshev et al.

(56) **References Cited**

U.S. PATENT DOCUMENTS

4,505,273	A	3/1985	Braun et al.
4,505,414	A	3/1985	Filipi
4,506,671	A	3/1985	Green
4,512,038	A	4/1985	Alexander et al.
4,514,477	A	4/1985	Kobayashi
4,520,817	A	6/1985	Green
4,522,327	A	6/1985	Korthoff et al.
4,523,707	A	6/1985	Blake, III et al.
4,526,174	A	7/1985	Froehlich
4,527,724	A	7/1985	Chow et al.
4,530,357	A	7/1985	Pawloski et al.
4,530,453	A	7/1985	Green
4,531,522	A	7/1985	Bedi et al.
4,532,927	A	8/1985	Miksza, Jr.
4,540,202	A	9/1985	Amphoux et al.
4,548,202	A	10/1985	Duncan
4,556,058	A	12/1985	Green
4,560,915	A	12/1985	Soultanian
4,565,109	A	1/1986	Tsay
4,565,189	A	1/1986	Mabuchi
4,566,620	A	1/1986	Green et al.
4,569,346	A	2/1986	Poirier
4,569,469	A	2/1986	Mongeon et al.
4,571,213	A	2/1986	Ishimoto
4,573,468	A	3/1986	Conta et al.
4,573,469	A	3/1986	Golden et al.
4,573,622	A	3/1986	Green et al.
4,576,165	A	3/1986	Green et al.
4,576,167	A	3/1986	Noiles
4,580,712	A	4/1986	Green
4,585,153	A	4/1986	Failla et al.
4,586,501	A	5/1986	Claracq
4,586,502	A	5/1986	Bedi et al.
4,589,416	A	5/1986	Green
4,589,582	A	5/1986	Bilotti
4,589,870	A	5/1986	Citrin et al.
4,591,085	A	5/1986	Di Giovanni
RE32,214	E	7/1986	Schramm
4,597,753	A	7/1986	Turley
4,600,037	A	7/1986	Hatten
4,604,786	A	8/1986	Howie, Jr.
4,605,001	A	8/1986	Rothfuss et al.
4,605,004	A	8/1986	Di Giovanni et al.
4,606,343	A	8/1986	Conta et al.
4,607,636	A	8/1986	Kula et al.
4,607,638	A	8/1986	Crainich
4,608,980	A	9/1986	Aihara
4,608,981	A	9/1986	Rothfuss et al.
4,610,250	A	9/1986	Green
4,610,383	A	9/1986	Rothfuss et al.
4,612,933	A	9/1986	Brinkerhoff et al.
D286,180	S	10/1986	Korthoff
D286,442	S	10/1986	Korthoff et al.
4,617,893	A	10/1986	Donner et al.
4,617,914	A	10/1986	Ueda
4,617,935	A	10/1986	Cartmell et al.
4,619,262	A	10/1986	Taylor
4,619,391	A	10/1986	Sharkany et al.
4,624,401	A	11/1986	Gassner et al.
D287,278	S	12/1986	Spreckelmeier
4,628,459	A	12/1986	Shinohara et al.
4,628,636	A	12/1986	Folger
4,629,107	A	12/1986	Fedotov et al.
4,632,290	A	12/1986	Green et al.
4,633,861	A	1/1987	Chow et al.
4,633,874	A	1/1987	Chow et al.
4,634,419	A	1/1987	Kreizman et al.
4,635,638	A	1/1987	Weintraub et al.
4,641,076	A	2/1987	Linden
4,642,618	A	2/1987	Johnson et al.
4,642,738	A	2/1987	Meller
4,643,173	A	2/1987	Bell et al.
4,643,731	A	2/1987	Eckenhoff
4,646,722	A	3/1987	Silverstein et al.
4,646,745	A	3/1987	Noiles
4,651,734	A	3/1987	Doss et al.
4,652,820	A	3/1987	Maresca
4,654,028	A	3/1987	Suma
4,655,222	A	4/1987	Florez et al.
4,662,555	A	5/1987	Thornton
4,663,874	A	5/1987	Sano et al.
4,664,305	A	5/1987	Blake, III et al.
4,665,916	A	5/1987	Green
4,667,674	A	5/1987	Korthoff et al.
4,669,647	A	6/1987	Storace
4,671,278	A	6/1987	Chin
4,671,280	A	6/1987	Dorband et al.
4,671,445	A	6/1987	Barker et al.
4,672,964	A	6/1987	Dee et al.
4,675,944	A	6/1987	Wells
4,676,245	A	6/1987	Fukuda
4,679,460	A	7/1987	Yoshigai
4,679,719	A	7/1987	Kramer
4,684,051	A	8/1987	Akopov et al.
4,688,555	A	8/1987	Wardle
4,691,703	A	9/1987	Auth et al.
4,693,248	A	9/1987	Failla
4,698,579	A	10/1987	Richter et al.
4,700,703	A	10/1987	Resnick et al.
4,705,038	A	11/1987	Sjostrom et al.
4,708,141	A	11/1987	Inoue et al.
4,709,120	A	11/1987	Pearson
4,715,520	A	12/1987	Roehr, Jr. et al.
4,719,917	A	1/1988	Barrows et al.
4,721,099	A	1/1988	Chikama
4,722,340	A	2/1988	Takayama et al.
4,724,840	A	2/1988	McVay et al.
4,726,247	A	2/1988	Hormann
4,727,308	A	2/1988	Huljak et al.
4,728,020	A	3/1988	Green et al.
4,728,876	A	3/1988	Mongeon et al.
4,729,260	A	3/1988	Dudden
4,730,726	A	3/1988	Holzwarth
4,741,336	A	5/1988	Failla et al.
4,743,214	A	5/1988	Tai-Cheng
4,744,363	A	5/1988	Hasson
4,747,820	A	5/1988	Hornlein et al.
4,750,902	A	6/1988	Wuchinich et al.
4,752,024	A	6/1988	Green et al.
4,754,909	A	7/1988	Barker et al.
4,755,070	A	7/1988	Cerutti
4,761,326	A	8/1988	Barnes et al.
4,763,669	A	8/1988	Jaeger
4,767,044	A	8/1988	Green
D297,764	S	9/1988	Hunt et al.
4,773,420	A	9/1988	Green
4,777,780	A	10/1988	Holzwarth
4,781,186	A	11/1988	Simpson et al.
4,784,137	A	11/1988	Kulik et al.
4,787,387	A	11/1988	Burbank, III et al.
4,788,485	A	11/1988	Kawagishi et al.
D298,967	S	12/1988	Hunt
4,788,978	A	12/1988	Strekopytov et al.
4,790,225	A	12/1988	Moody et al.
4,790,314	A	12/1988	Weaver
4,805,617	A	2/1989	Bedi et al.
4,805,823	A	2/1989	Rothfuss
4,807,628	A	2/1989	Peters et al.
4,809,695	A	3/1989	Gwathmey et al.
4,815,460	A	3/1989	Porat et al.
4,817,643	A	4/1989	Olson
4,817,847	A	4/1989	Redtenbacher et al.
4,819,495	A	4/1989	Hormann
4,819,853	A	4/1989	Green
4,821,939	A	4/1989	Green
4,827,552	A	5/1989	Bojar et al.
4,827,911	A	5/1989	Broadwin et al.
4,828,542	A	5/1989	Hermann
4,828,944	A	5/1989	Yabe et al.
4,830,855	A	5/1989	Stewart
4,832,158	A	5/1989	Farrar et al.
4,833,937	A	5/1989	Nagano
4,834,096	A	5/1989	Oh et al.
4,834,720	A	5/1989	Blinkhorn

(56) **References Cited**

U.S. PATENT DOCUMENTS

4,838,859	A	6/1989	Strassmann
4,844,068	A	7/1989	Arata et al.
4,848,637	A	7/1989	Pruitt
4,856,078	A	8/1989	Konopka
4,860,644	A	8/1989	Kohl et al.
4,862,891	A	9/1989	Smith
4,863,423	A	9/1989	Wallace
4,865,030	A	9/1989	Polyak
4,868,530	A	9/1989	Ahs
4,868,958	A	9/1989	Suzuki et al.
4,869,414	A	9/1989	Green et al.
4,869,415	A	9/1989	Fox
4,873,977	A	10/1989	Avant et al.
4,875,486	A	10/1989	Rapoport et al.
4,880,015	A	11/1989	Nierman
4,890,613	A	1/1990	Golden et al.
4,892,244	A	1/1990	Fox et al.
4,893,622	A	1/1990	Green et al.
4,894,051	A	1/1990	Shiber
4,896,584	A	1/1990	Stoll et al.
4,896,678	A	1/1990	Ogawa
4,900,303	A	2/1990	Lemelson
4,903,697	A	2/1990	Resnick et al.
4,909,789	A	3/1990	Taguchi et al.
4,915,100	A	4/1990	Green
4,919,679	A	4/1990	Averill et al.
4,921,479	A	5/1990	Grayzel
4,925,082	A	5/1990	Kim
4,928,699	A	5/1990	Sasai
4,930,503	A	6/1990	Pruitt
4,930,674	A	6/1990	Barak
4,931,047	A	6/1990	Broadwin et al.
4,931,737	A	6/1990	Hishiki
4,932,960	A	6/1990	Green et al.
4,933,800	A	6/1990	Yang
4,933,843	A	6/1990	Scheller et al.
D309,350	S	7/1990	Sutherland et al.
4,938,408	A	7/1990	Bedi et al.
4,941,623	A	7/1990	Pruitt
4,943,182	A	7/1990	Hoblingre
4,944,443	A	7/1990	Oddsen et al.
4,946,067	A	8/1990	Kelsall
4,948,327	A	8/1990	Crupi, Jr.
4,949,707	A	8/1990	LeVahn et al.
4,949,927	A	8/1990	Madocks et al.
4,950,268	A	8/1990	Rink
4,951,860	A	8/1990	Peters et al.
4,951,861	A	8/1990	Schulze et al.
4,954,960	A	9/1990	Lo et al.
4,955,959	A	9/1990	Tompkins et al.
4,957,212	A	9/1990	Duck et al.
4,962,681	A	10/1990	Yang
4,962,877	A	10/1990	Hervas
4,964,559	A	10/1990	Deniega et al.
4,964,863	A	10/1990	Kanshin et al.
4,965,709	A	10/1990	Ngo
4,970,656	A	11/1990	Lo et al.
4,973,274	A	11/1990	Hirukawa
4,973,302	A	11/1990	Armour et al.
4,976,173	A	12/1990	Yang
4,978,049	A	12/1990	Green
4,978,333	A	12/1990	Broadwin et al.
4,979,952	A	12/1990	Kubota et al.
4,984,564	A	1/1991	Yuen
4,986,808	A	1/1991	Broadwin et al.
4,987,049	A	1/1991	Komamura et al.
4,988,334	A	1/1991	Hornlein et al.
4,995,877	A	2/1991	Ams et al.
4,995,959	A	2/1991	Metzner
4,996,975	A	3/1991	Nakamura
5,001,649	A	3/1991	Lo et al.
5,002,543	A	3/1991	Bradshaw et al.
5,002,553	A	3/1991	Shiber
5,005,754	A	4/1991	Van Overloop
5,009,222	A	4/1991	Her
5,009,661	A	4/1991	Michelson
5,012,411	A	4/1991	Policastro et al.
5,014,898	A	5/1991	Heidrich
5,014,899	A	5/1991	Presty et al.
5,015,227	A	5/1991	Broadwin et al.
5,018,515	A	5/1991	Gilman
5,018,657	A	5/1991	Pedlick et al.
5,019,077	A	5/1991	De Bastiani et al.
5,024,652	A	6/1991	Dumenek et al.
5,024,671	A	6/1991	Tu et al.
5,025,559	A	6/1991	McCullough
5,027,834	A	7/1991	Pruitt
5,030,226	A	7/1991	Green et al.
5,031,814	A	7/1991	Tompkins et al.
5,033,552	A	7/1991	Hu
5,035,040	A	7/1991	Kerrigan et al.
5,037,018	A	8/1991	Matsuda et al.
5,038,109	A	8/1991	Goble et al.
5,038,247	A	8/1991	Kelley et al.
5,040,715	A	8/1991	Green et al.
5,042,707	A	8/1991	Taheri
5,056,953	A	10/1991	Marot et al.
5,060,658	A	10/1991	Dejter, Jr. et al.
5,061,269	A	10/1991	Muller
5,062,491	A	11/1991	Takeshima et al.
5,062,563	A	11/1991	Green et al.
5,065,929	A	11/1991	Schulze et al.
5,071,052	A	12/1991	Rodak et al.
5,071,430	A	12/1991	de Salis et al.
5,074,454	A	12/1991	Peters
5,077,506	A	12/1991	Krause
5,079,006	A	1/1992	Urquhart
5,080,556	A	1/1992	Carreno
5,083,695	A	1/1992	Foslien et al.
5,084,057	A	1/1992	Green et al.
5,088,979	A	2/1992	Filipi et al.
5,088,997	A	2/1992	Delahuerga et al.
5,089,606	A	2/1992	Cole et al.
5,094,247	A	3/1992	Hernandez et al.
5,098,004	A	3/1992	Kerrigan
5,098,360	A	3/1992	Hirota
5,100,042	A	3/1992	Gravener et al.
5,100,420	A	3/1992	Green et al.
5,100,422	A	3/1992	Berguer et al.
5,104,025	A	4/1992	Main et al.
5,104,397	A	4/1992	Vasconcelos et al.
5,104,400	A	4/1992	Berguer et al.
5,106,008	A	4/1992	Tompkins et al.
5,108,368	A	4/1992	Hammerslag et al.
5,109,722	A	5/1992	Hufnagle et al.
5,111,987	A	5/1992	Moeinzadeh et al.
5,116,349	A	5/1992	Aranyi
D327,323	S	6/1992	Hunt
5,119,009	A	6/1992	McCaleb et al.
5,122,156	A	6/1992	Granger et al.
5,124,990	A	6/1992	Williamson
5,129,570	A	7/1992	Schulze et al.
5,137,198	A	8/1992	Nobis et al.
5,139,513	A	8/1992	Segato
5,141,144	A	8/1992	Foslien et al.
5,142,932	A	9/1992	Moya et al.
5,151,102	A	9/1992	Kamiyama et al.
5,155,941	A	10/1992	Takahashi et al.
5,156,151	A	10/1992	Imran
5,156,315	A	10/1992	Green et al.
5,156,609	A	10/1992	Nakao et al.
5,156,614	A	10/1992	Green et al.
5,158,222	A	10/1992	Green et al.
5,158,567	A	10/1992	Green
D330,699	S	11/1992	Gill
5,163,598	A	11/1992	Peters et al.
5,163,842	A	11/1992	Nonomura
5,164,652	A	11/1992	Johnson et al.
5,168,605	A	12/1992	Bartlett
5,170,925	A	12/1992	Madden et al.
5,171,247	A	12/1992	Hughett et al.
5,171,249	A	12/1992	Stefanchik et al.
5,171,253	A	12/1992	Klieman
5,173,053	A	12/1992	Swanson et al.

(56) **References Cited**

U.S. PATENT DOCUMENTS

5,173,133 A 12/1992 Morin et al.
5,176,677 A 1/1993 Wuchinich
5,176,688 A 1/1993 Narayan et al.
5,181,514 A 1/1993 Solomon et al.
5,187,422 A 2/1993 Izenbaard et al.
5,188,102 A 2/1993 Idemoto et al.
5,188,111 A 2/1993 Yates et al.
5,188,126 A 2/1993 Fabian et al.
5,190,517 A 3/1993 Zieve et al.
5,190,544 A 3/1993 Chapman et al.
5,190,560 A 3/1993 Woods et al.
5,190,657 A 3/1993 Heagle et al.
5,192,288 A 3/1993 Thompson et al.
5,193,731 A 3/1993 Aranyi
5,195,505 A 3/1993 Josefsen
5,195,968 A 3/1993 Lundquist et al.
5,197,648 A 3/1993 Gingold
5,197,649 A 3/1993 Bessler et al.
5,197,966 A 3/1993 Sommerkamp
5,197,970 A 3/1993 Green et al.
5,200,280 A 4/1993 Karasa
5,201,750 A 4/1993 Hocherl et al.
5,205,459 A 4/1993 Brinkerhoff et al.
5,207,672 A 5/1993 Roth et al.
5,207,697 A 5/1993 Carusillo et al.
5,209,747 A 5/1993 Knoepfler
5,209,756 A 5/1993 Seedhom et al.
5,211,649 A 5/1993 Kohler et al.
5,211,655 A 5/1993 Hasson
5,217,457 A 6/1993 Delahuerga et al.
5,217,478 A 6/1993 Rexroth
5,219,111 A 6/1993 Bilotti et al.
5,220,269 A 6/1993 Chen et al.
5,221,036 A 6/1993 Takase
5,221,281 A 6/1993 Klicek
5,222,945 A 6/1993 Basnight
5,222,963 A 6/1993 Brinkerhoff et al.
5,222,975 A 6/1993 Crainich
5,222,976 A 6/1993 Yoon
5,223,675 A 6/1993 Taft
D338,729 S 8/1993 Sprecklemeier et al.
5,234,447 A 8/1993 Kaster et al.
5,236,269 A 8/1993 Handy
5,236,424 A 8/1993 Imran
5,236,440 A 8/1993 Hlavacek
5,236,629 A 8/1993 Mahabadi et al.
5,239,981 A 8/1993 Anapliotis
5,240,163 A 8/1993 Stein et al.
5,242,456 A 9/1993 Nash et al.
5,242,457 A 9/1993 Akopov et al.
5,244,462 A 9/1993 Delahuerga et al.
5,246,156 A 9/1993 Rothfuss et al.
5,246,443 A 9/1993 Mai
5,251,801 A 10/1993 Ruckdeschel et al.
5,253,793 A 10/1993 Green et al.
5,258,007 A 11/1993 Spetzler et al.
5,258,008 A 11/1993 Wilk
5,258,009 A 11/1993 Conners
5,258,010 A 11/1993 Green et al.
5,258,012 A 11/1993 Luscombe et al.
5,259,366 A 11/1993 Reydel et al.
5,259,835 A 11/1993 Clark et al.
5,260,637 A 11/1993 Pizzi
5,261,135 A 11/1993 Mitchell
5,261,877 A 11/1993 Fine et al.
5,261,922 A 11/1993 Hood
5,263,629 A 11/1993 Trumbull et al.
5,263,937 A 11/1993 Shipp
5,263,973 A 11/1993 Cook
5,264,218 A 11/1993 Rogozinski
5,268,622 A 12/1993 Philipp
5,269,794 A 12/1993 Rexroth
5,271,543 A 12/1993 Grant et al.
5,271,544 A 12/1993 Fox et al.
RE34,519 E 1/1994 Fox et al.
5,275,322 A 1/1994 Brinkerhoff et al.
5,275,323 A 1/1994 Schulze et al.
5,275,608 A 1/1994 Forman et al.
5,279,416 A 1/1994 Malec et al.
5,281,216 A 1/1994 Klicek
5,281,400 A 1/1994 Berry, Jr.
5,282,806 A 2/1994 Haber et al.
5,282,826 A 2/1994 Quadri
5,282,829 A 2/1994 Hermes
5,284,128 A 2/1994 Hart
5,285,381 A 2/1994 Iskarous et al.
5,285,945 A 2/1994 Brinkerhoff et al.
5,286,253 A 2/1994 Fucci
5,289,963 A 3/1994 McGarry et al.
5,290,271 A 3/1994 Jernberg
5,290,310 A 3/1994 Makower et al.
5,291,133 A 3/1994 Gokhale et al.
5,292,053 A 3/1994 Bilotti et al.
5,293,024 A 3/1994 Sugahara et al.
5,297,714 A 3/1994 Kramer
5,300,087 A 4/1994 Knoepfler
5,302,148 A 4/1994 Heinz
5,303,606 A 4/1994 Kokinda
5,304,204 A 4/1994 Bregen
D347,474 S 5/1994 Olson
5,307,976 A 5/1994 Olson et al.
5,308,353 A 5/1994 Beurrier
5,308,358 A 5/1994 Bond et al.
5,308,576 A 5/1994 Green et al.
5,309,387 A 5/1994 Mori et al.
5,309,927 A 5/1994 Welch
5,312,023 A 5/1994 Green et al.
5,312,024 A 5/1994 Grant et al.
5,312,329 A 5/1994 Beaty et al.
5,313,935 A 5/1994 Kortenbach et al.
5,313,967 A 5/1994 Lieber et al.
5,314,424 A 5/1994 Nicholas
5,314,445 A 5/1994 Heidmueller et al.
5,314,466 A 5/1994 Stern et al.
5,318,221 A 6/1994 Green et al.
5,318,589 A 6/1994 Lichtman
5,320,627 A 6/1994 Sorensen et al.
D348,930 S 7/1994 Olson
5,326,013 A 7/1994 Green et al.
5,329,923 A 7/1994 Lundquist
5,330,486 A 7/1994 Wilk
5,330,487 A 7/1994 Thornton et al.
5,330,502 A 7/1994 Hassler et al.
5,331,971 A 7/1994 Bales et al.
5,332,142 A 7/1994 Robinson et al.
5,333,422 A 8/1994 Warren et al.
5,333,772 A 8/1994 Rothfuss et al.
5,333,773 A 8/1994 Main et al.
5,334,183 A 8/1994 Wuchinich
5,336,130 A 8/1994 Ray
5,336,229 A 8/1994 Noda
5,336,232 A 8/1994 Green et al.
5,338,317 A 8/1994 Hasson et al.
5,339,799 A 8/1994 Kami et al.
5,341,724 A 8/1994 Vatel
5,341,807 A 8/1994 Nardella
5,341,810 A 8/1994 Dardel
5,342,380 A 8/1994 Hood
5,342,381 A 8/1994 Tidemand
5,342,385 A 8/1994 Norelli et al.
5,342,395 A 8/1994 Jarrett et al.
5,342,396 A 8/1994 Cook
5,343,382 A 8/1994 Hale et al.
5,343,391 A 8/1994 Mushabac
5,344,059 A 9/1994 Green et al.
5,344,060 A 9/1994 Gravener et al.
5,344,454 A 9/1994 Clarke et al.
5,346,504 A 9/1994 Ortiz et al.
5,348,259 A 9/1994 Blanco et al.
5,350,104 A 9/1994 Main et al.
5,350,355 A 9/1994 Sklar
5,350,388 A 9/1994 Epstein
5,350,391 A 9/1994 Iacovelli
5,350,400 A 9/1994 Esposito et al.

(56) **References Cited**

U.S. PATENT DOCUMENTS

5,352,229 A 10/1994 Goble et al.
5,352,235 A 10/1994 Koros et al.
5,352,238 A 10/1994 Green et al.
5,353,798 A 10/1994 Sieben
5,354,215 A 10/1994 Viracola
5,354,250 A 10/1994 Christensen
5,354,303 A 10/1994 Spaeth et al.
5,355,897 A 10/1994 Pietrafitta et al.
5,356,006 A 10/1994 Alpern et al.
5,356,064 A 10/1994 Green et al.
5,358,506 A 10/1994 Green et al.
5,358,510 A 10/1994 Luscombe et al.
5,359,231 A 10/1994 Flowers et al.
D352,780 S 11/1994 Glaeser et al.
5,359,993 A 11/1994 Slater et al.
5,360,305 A 11/1994 Kerrigan
5,360,428 A 11/1994 Hutchinson, Jr.
5,361,902 A 11/1994 Abidin et al.
5,364,001 A 11/1994 Bryan
5,364,002 A 11/1994 Green et al.
5,364,003 A * 11/1994 Williamson, IV A61B 17/0644 227/19
5,366,133 A 11/1994 Geiste
5,366,134 A 11/1994 Green et al.
5,366,479 A 11/1994 McGarry et al.
5,368,015 A 11/1994 Wilk
5,368,592 A 11/1994 Stern et al.
5,368,599 A 11/1994 Hirsch et al.
5,369,565 A 11/1994 Chen et al.
5,370,645 A 12/1994 Klicek et al.
5,372,124 A 12/1994 Takayama et al.
5,372,596 A 12/1994 Klicek et al.
5,372,602 A 12/1994 Burke
5,374,277 A 12/1994 Hassler
5,375,588 A 12/1994 Yoon
5,376,095 A 12/1994 Ortiz
5,379,933 A 1/1995 Green et al.
5,381,649 A 1/1995 Webb
5,381,782 A 1/1995 DeLaRama et al.
5,381,943 A 1/1995 Allen et al.
5,382,247 A 1/1995 Cimino et al.
5,383,460 A 1/1995 Jang et al.
5,383,738 A 1/1995 Herbermann
5,383,874 A 1/1995 Jackson et al.
5,383,880 A 1/1995 Hooven
5,383,881 A 1/1995 Green et al.
5,383,882 A 1/1995 Buess et al.
5,383,888 A 1/1995 Zvenyatsky et al.
5,383,895 A 1/1995 Holmes et al.
5,388,568 A 2/1995 van der Heide
5,389,072 A 2/1995 Imran
5,389,098 A * 2/1995 Tsuruta A61B 17/07207 606/49
5,389,102 A 2/1995 Green et al.
5,389,104 A 2/1995 Hahnen et al.
5,391,180 A 2/1995 Tovey et al.
5,392,979 A 2/1995 Green et al.
5,395,030 A 3/1995 Kuramoto et al.
5,395,033 A 3/1995 Byrne et al.
5,395,034 A 3/1995 Allen et al.
5,395,312 A 3/1995 Desai
5,395,384 A 3/1995 Duthoit et al.
5,397,046 A 3/1995 Savage et al.
5,397,324 A 3/1995 Carroll et al.
5,400,267 A 3/1995 Denen et al.
5,403,276 A 4/1995 Schechter et al.
5,403,312 A 4/1995 Yates et al.
5,404,106 A 4/1995 Matsuda
5,404,870 A 4/1995 Brinkerhoff et al.
5,404,960 A 4/1995 Wada et al.
5,405,072 A 4/1995 Zlock et al.
5,405,073 A 4/1995 Porter
5,405,344 A 4/1995 Williamson et al.
5,405,360 A 4/1995 Tovey
5,407,293 A 4/1995 Crainich
5,408,409 A 4/1995 Glassman et al.
5,409,498 A 4/1995 Braddock et al.
5,409,703 A 4/1995 McAnalley et al.
D357,981 S 5/1995 Green et al.
5,411,481 A 5/1995 Allen et al.
5,411,508 A 5/1995 Bessler et al.
5,413,107 A 5/1995 Oakley et al.
5,413,267 A 5/1995 Solyntjes et al.
5,413,268 A 5/1995 Green et al.
5,413,272 A 5/1995 Green et al.
5,413,573 A 5/1995 Koivukangas
5,415,334 A 5/1995 Williamson et al.
5,415,335 A 5/1995 Knodell, Jr.
5,417,203 A 5/1995 Tovey et al.
5,417,361 A 5/1995 Williamson, IV
5,419,766 A 5/1995 Chang et al.
5,421,829 A 6/1995 Olichney et al.
5,422,567 A 6/1995 Matsunaga
5,423,471 A 6/1995 Mastri et al.
5,423,809 A 6/1995 Klicek
5,423,835 A 6/1995 Green et al.
5,425,355 A 6/1995 Kulick
5,425,745 A 6/1995 Green et al.
5,427,298 A 6/1995 Tegtmeier
5,431,322 A 7/1995 Green et al.
5,431,323 A 7/1995 Smith et al.
5,431,645 A 7/1995 Smith et al.
5,431,654 A 7/1995 Nic
5,431,666 A 7/1995 Sauer et al.
5,431,668 A 7/1995 Burbank, III et al.
5,433,721 A 7/1995 Hooven et al.
5,437,681 A 8/1995 Meade et al.
5,438,302 A 8/1995 Goble
5,438,997 A 8/1995 Sieben et al.
5,439,155 A 8/1995 Viola
5,439,156 A 8/1995 Grant et al.
5,439,479 A 8/1995 Shichman et al.
5,441,191 A 8/1995 Linden
5,441,193 A 8/1995 Gravener
5,441,483 A 8/1995 Avitall
5,441,494 A 8/1995 Ortiz
5,441,499 A 8/1995 Fritzsch
5,443,197 A 8/1995 Malis et al.
5,443,198 A 8/1995 Viola et al.
5,443,463 A 8/1995 Stern et al.
5,444,113 A 8/1995 Sinclair et al.
5,445,155 A 8/1995 Sieben
5,445,304 A 8/1995 Plyley et al.
5,445,604 A 8/1995 Lang
5,445,644 A 8/1995 Pietrafitta et al.
5,446,646 A 8/1995 Miyazaki
5,447,265 A 9/1995 Vidal et al.
5,447,417 A 9/1995 Kuhl et al.
5,447,513 A 9/1995 Davison et al.
5,449,355 A 9/1995 Rhum et al.
5,449,365 A 9/1995 Green et al.
5,449,370 A 9/1995 Vaitekunas
5,452,836 A 9/1995 Huitema et al.
5,452,837 A 9/1995 Williamson, IV et al.
5,454,378 A 10/1995 Palmer et al.
5,454,822 A 10/1995 Schob et al.
5,454,824 A 10/1995 Fontayne et al.
5,454,827 A 10/1995 Aust et al.
5,456,401 A 10/1995 Green et al.
5,456,917 A 10/1995 Wise et al.
5,458,279 A 10/1995 Plyley
5,458,579 A 10/1995 Chodorow et al.
5,462,215 A 10/1995 Viola et al.
5,464,013 A 11/1995 Lemelson
5,464,144 A 11/1995 Guy et al.
5,464,300 A 11/1995 Crainich
5,465,819 A 11/1995 Weilant et al.
5,465,894 A 11/1995 Clark et al.
5,465,895 A 11/1995 Knodel et al.
5,465,896 A 11/1995 Allen et al.
5,466,020 A 11/1995 Page et al.
5,467,911 A 11/1995 Tsuruta et al.
5,468,253 A 11/1995 Bezwada et al.

(56) **References Cited**

U.S. PATENT DOCUMENTS

5,470,006	A	11/1995	Rodak
5,470,007	A	11/1995	Plyley et al.
5,470,008	A	11/1995	Rodak
5,470,009	A	11/1995	Rodak
5,470,010	A	11/1995	Rothfuss et al.
5,471,129	A	11/1995	Mann
5,472,132	A	12/1995	Savage et al.
5,472,442	A	12/1995	Klicek
5,473,204	A	12/1995	Temple
5,474,057	A	12/1995	Makower et al.
5,474,223	A	12/1995	Viola et al.
5,474,566	A	12/1995	Alesi et al.
5,474,570	A	12/1995	Kockerling et al.
5,474,738	A	12/1995	Nichols et al.
5,476,206	A	12/1995	Green et al.
5,476,479	A	12/1995	Green et al.
5,476,481	A	12/1995	Schondorf
5,478,003	A	12/1995	Green et al.
5,478,308	A	12/1995	Cartmell et al.
5,478,354	A	12/1995	Tovey et al.
5,480,089	A	1/1996	Blewett
5,480,409	A	1/1996	Riza
5,482,197	A	1/1996	Green et al.
5,483,952	A	1/1996	Aranyi
5,484,095	A	1/1996	Green et al.
5,484,398	A	1/1996	Stoddard
5,484,451	A	1/1996	Akopov et al.
5,485,947	A	1/1996	Olson et al.
5,485,952	A	1/1996	Fontayne
5,487,377	A	1/1996	Smith et al.
5,487,499	A	1/1996	Sorrentino et al.
5,487,500	A	1/1996	Knodel et al.
5,489,058	A	2/1996	Plyley et al.
5,489,256	A	2/1996	Adair
5,489,290	A	2/1996	Furnish
5,490,819	A	2/1996	Nicholas et al.
5,492,671	A	2/1996	Krafft
5,496,312	A	3/1996	Klicek
5,496,317	A	3/1996	Goble et al.
5,497,933	A	3/1996	DeFonzo et al.
5,498,164	A	3/1996	Ward et al.
5,498,838	A	3/1996	Furman
5,501,654	A	3/1996	Failla et al.
5,503,320	A	4/1996	Webster et al.
5,503,635	A	4/1996	Sauer et al.
5,503,638	A	4/1996	Cooper et al.
5,505,363	A	4/1996	Green et al.
5,507,425	A	4/1996	Ziglioli
5,507,426	A	4/1996	Young et al.
5,507,773	A	4/1996	Huitema et al.
5,509,596	A	4/1996	Green et al.
5,509,916	A	4/1996	Taylor
5,509,918	A	4/1996	Romano
5,511,564	A	4/1996	Wilk
5,514,129	A	5/1996	Smith
5,514,149	A	5/1996	Green et al.
5,514,157	A	5/1996	Nicholas et al.
5,518,163	A	5/1996	Hooven
5,518,164	A	5/1996	Hooven
5,520,609	A	5/1996	Moll et al.
5,520,634	A	5/1996	Fox et al.
5,520,678	A	5/1996	Heckele et al.
5,520,700	A	5/1996	Beyar et al.
5,522,817	A	6/1996	Sander et al.
5,522,831	A	6/1996	Sleister et al.
5,527,264	A	6/1996	Moll et al.
5,527,320	A	6/1996	Carruthers et al.
5,529,235	A	6/1996	Boiarski et al.
D372,086	S	7/1996	Grasso et al.
5,531,305	A	7/1996	Roberts et al.
5,531,744	A	7/1996	Nardella et al.
5,531,856	A	7/1996	Moll et al.
5,533,521	A	7/1996	Granger
5,533,581	A	7/1996	Barth et al.
5,533,661	A	7/1996	Main et al.
5,535,934	A	7/1996	Boiarski et al.
5,535,935	A	7/1996	Vidal et al.
5,535,937	A	7/1996	Boiarski et al.
5,540,375	A	7/1996	Bolanos et al.
5,540,705	A	7/1996	Meade et al.
5,541,376	A	7/1996	Ladtkow et al.
5,541,489	A	7/1996	Dunstan
5,542,594	A	8/1996	Mckean et al.
5,542,945	A	8/1996	Fritzsch
5,542,949	A	8/1996	Yoon
5,543,119	A	8/1996	Sutter et al.
5,543,695	A	8/1996	Culp et al.
5,544,802	A	8/1996	Crainich
5,547,117	A	8/1996	Hamblin et al.
5,549,583	A	8/1996	Sanford et al.
5,549,621	A	8/1996	Bessler et al.
5,549,627	A	8/1996	Kieturakis
5,549,628	A	8/1996	Cooper et al.
5,549,637	A	8/1996	Crainich
5,551,622	A	9/1996	Yoon
5,553,624	A	9/1996	Francese et al.
5,553,675	A	9/1996	Pitzen et al.
5,553,765	A	9/1996	Knodel et al.
5,554,148	A	9/1996	Aebischer et al.
5,554,169	A	9/1996	Green et al.
5,556,020	A	9/1996	Hou
5,556,416	A	9/1996	Clark et al.
5,558,533	A	9/1996	Hashizawa et al.
5,558,665	A	9/1996	Kieturakis
5,558,671	A	9/1996	Yates
5,560,530	A	10/1996	Bolanos et al.
5,560,532	A	10/1996	DeFonzo et al.
5,561,881	A	10/1996	Klinger et al.
5,562,239	A	10/1996	Boiarski et al.
5,562,241	A	10/1996	Knodel et al.
5,562,682	A	10/1996	Oberlin et al.
5,562,690	A	10/1996	Green et al.
5,562,694	A	10/1996	Sauer et al.
5,562,701	A	10/1996	Huitema et al.
5,562,702	A	10/1996	Huitema et al.
5,563,481	A	10/1996	Krause
5,564,615	A	10/1996	Bishop et al.
5,569,161	A	10/1996	Ebling et al.
5,569,270	A	10/1996	Weng
5,569,284	A	10/1996	Young et al.
5,571,090	A	11/1996	Sherts
5,571,100	A	11/1996	Goble et al.
5,571,116	A	11/1996	Bolanos et al.
5,571,285	A	11/1996	Chow et al.
5,571,488	A	11/1996	Beerstecher et al.
5,573,169	A	11/1996	Green et al.
5,573,543	A	11/1996	Akopov et al.
5,574,431	A	11/1996	Mckeown et al.
5,575,054	A	11/1996	Klinzing et al.
5,575,789	A	11/1996	Bell et al.
5,575,799	A	11/1996	Bolanos et al.
5,575,803	A	11/1996	Cooper et al.
5,575,805	A	11/1996	Li
5,577,654	A	11/1996	Bishop
5,578,052	A	11/1996	Koros et al.
5,579,978	A	12/1996	Green et al.
5,580,067	A	12/1996	Hamblin et al.
5,582,611	A	12/1996	Tsuruta et al.
5,582,617	A	12/1996	Klieman et al.
5,582,907	A	12/1996	Pall
5,583,114	A	12/1996	Barrows et al.
5,584,425	A	12/1996	Savage et al.
5,586,711	A	12/1996	Plyley et al.
5,588,579	A	12/1996	Schnut et al.
5,588,580	A	12/1996	Paul et al.
5,588,581	A	12/1996	Conlon et al.
5,591,170	A	1/1997	Spievack et al.
5,591,187	A	1/1997	Dekel
5,597,107	A	1/1997	Knodel et al.
5,599,151	A	2/1997	Daum et al.
5,599,279	A	2/1997	Slotman et al.
5,599,344	A	2/1997	Paterson
5,599,350	A	2/1997	Schulze et al.
5,599,852	A	2/1997	Scopelianos et al.

(56) **References Cited**

U.S. PATENT DOCUMENTS

5,601,224 A 2/1997 Bishop et al.
5,601,573 A 2/1997 Fogelberg et al.
5,601,604 A 2/1997 Vincent
5,602,449 A 2/1997 Krause et al.
5,603,443 A 2/1997 Clark et al.
5,605,272 A 2/1997 Witt et al.
5,605,273 A 2/1997 Hamblin et al.
5,607,094 A 3/1997 Clark et al.
5,607,095 A 3/1997 Smith et al.
5,607,303 A 3/1997 Nakamura
5,607,433 A 3/1997 Polla et al.
5,607,436 A 3/1997 Pratt et al.
5,607,450 A 3/1997 Zvenyatsky et al.
5,607,474 A 3/1997 Athanasiou et al.
5,609,285 A 3/1997 Grant et al.
5,609,601 A 3/1997 Kolesa et al.
5,611,709 A 3/1997 McAnulty
5,611,813 A 3/1997 Lichtman
5,613,499 A 3/1997 Palmer et al.
5,613,937 A 3/1997 Garrison et al.
5,613,966 A 3/1997 Makower et al.
5,614,887 A 3/1997 Buchbinder
5,615,820 A 4/1997 Viola
5,618,294 A 4/1997 Aust et al.
5,618,303 A 4/1997 Marlow et al.
5,618,307 A 4/1997 Donlon et al.
5,619,992 A 4/1997 Guthrie et al.
5,620,289 A 4/1997 Curry
5,620,326 A 4/1997 Younker
5,620,452 A 4/1997 Yoon
5,624,398 A 4/1997 Smith et al.
5,624,452 A 4/1997 Yates
5,626,587 A 5/1997 Bishop et al.
5,626,595 A 5/1997 Sklar et al.
5,626,979 A 5/1997 Mitsui et al.
5,628,446 A 5/1997 Geiste et al.
5,628,743 A 5/1997 Cimino
5,628,745 A 5/1997 Bek
5,630,539 A 5/1997 Plyley et al.
5,630,540 A 5/1997 Blewett
5,630,541 A 5/1997 Williamson, IV et al.
5,630,782 A 5/1997 Adair
5,631,973 A 5/1997 Green
5,632,432 A 5/1997 Schulze et al.
5,632,433 A 5/1997 Grant et al.
5,633,374 A 5/1997 Humphrey et al.
5,634,584 A 6/1997 Okorocha et al.
5,636,779 A 6/1997 Palmer
5,636,780 A 6/1997 Green et al.
5,637,110 A 6/1997 Pennybacker et al.
5,638,582 A 6/1997 Klatt et al.
5,639,008 A 6/1997 Gallagher et al.
D381,077 S 7/1997 Hunt
5,643,291 A 7/1997 Pier et al.
5,643,293 A 7/1997 Kogasaka et al.
5,643,294 A 7/1997 Tovey et al.
5,643,319 A 7/1997 Green et al.
5,645,209 A 7/1997 Green et al.
5,647,526 A 7/1997 Green et al.
5,647,869 A 7/1997 Goble et al.
5,649,937 A 7/1997 Bito et al.
5,649,956 A 7/1997 Jensen et al.
5,651,491 A 7/1997 Heaton et al.
5,651,762 A 7/1997 Bridges
5,651,821 A 7/1997 Uchida
5,653,373 A 8/1997 Green et al.
5,653,374 A 8/1997 Young et al.
5,653,677 A 8/1997 Okada et al.
5,653,721 A 8/1997 Knodel et al.
5,653,748 A 8/1997 Strecker
5,655,698 A 8/1997 Yoon
5,656,917 A 8/1997 Theobald
5,657,417 A 8/1997 Di Troia
5,657,429 A 8/1997 Wang et al.
5,657,921 A 8/1997 Young et al.
5,658,238 A 8/1997 Suzuki et al.
5,658,281 A 8/1997 Heard
5,658,298 A 8/1997 Vincent et al.
5,658,300 A 8/1997 Bito et al.
5,658,307 A 8/1997 Exconde
5,662,258 A 9/1997 Knodel et al.
5,662,260 A 9/1997 Yoon
5,662,662 A 9/1997 Bishop et al.
5,662,667 A 9/1997 Knodel
5,664,404 A 9/1997 Ivanov et al.
5,665,085 A 9/1997 Nardella
5,667,517 A 9/1997 Hooven
5,667,526 A 9/1997 Levin
5,667,527 A 9/1997 Cook
5,667,864 A 9/1997 Landoll
5,669,544 A 9/1997 Schulze et al.
5,669,904 A 9/1997 Platt, Jr. et al.
5,669,907 A 9/1997 Platt, Jr. et al.
5,669,918 A 9/1997 Balazs et al.
5,672,945 A 9/1997 Krause
5,673,840 A 10/1997 Schulze et al.
5,673,841 A 10/1997 Schulze et al.
5,673,842 A 10/1997 Bittner et al.
5,674,184 A 10/1997 Hassler, Jr.
5,674,286 A 10/1997 D'Alessio et al.
5,678,748 A 10/1997 Plyley et al.
5,680,981 A 10/1997 Mililli et al.
5,680,982 A 10/1997 Schulze et al.
5,680,983 A 10/1997 Plyley et al.
5,681,341 A 10/1997 Lunsford et al.
5,683,349 A 11/1997 Makower et al.
5,685,474 A 11/1997 Seeber
5,686,090 A 11/1997 Schilder et al.
5,688,270 A 11/1997 Yates et al.
5,690,269 A 11/1997 Bolanos et al.
5,690,675 A 11/1997 Sawyer et al.
5,692,668 A 12/1997 Schulze et al.
5,693,020 A 12/1997 Rauh
5,693,042 A 12/1997 Boiarski et al.
5,693,051 A 12/1997 Schulze et al.
5,695,494 A 12/1997 Becker
5,695,502 A 12/1997 Pier et al.
5,695,504 A 12/1997 Gifford, III et al.
5,695,524 A 12/1997 Kelley et al.
5,697,542 A 12/1997 Knodel et al.
5,697,543 A 12/1997 Burdorff
5,697,909 A 12/1997 Eggers et al.
5,697,943 A 12/1997 Sauer et al.
5,700,265 A 12/1997 Romano
5,700,270 A 12/1997 Peyser et al.
5,700,276 A 12/1997 Benecke
5,702,387 A 12/1997 Arts et al.
5,702,408 A 12/1997 Wales et al.
5,702,409 A 12/1997 Rayburn et al.
5,704,087 A 1/1998 Strub
5,704,534 A 1/1998 Huitema et al.
5,704,792 A 1/1998 Sobhani
5,706,997 A 1/1998 Green et al.
5,706,998 A 1/1998 Plyley et al.
5,707,392 A 1/1998 Kortenbach
5,709,334 A 1/1998 Sorrentino et al.
5,709,335 A 1/1998 Heck
5,709,680 A 1/1998 Yates et al.
5,709,706 A 1/1998 Kienzle et al.
5,711,472 A 1/1998 Bryan
5,711,960 A 1/1998 Shikinami
5,712,460 A 1/1998 Carr et al.
5,713,128 A 2/1998 Schrenk et al.
5,713,505 A 2/1998 Huitema
5,713,895 A 2/1998 Lontine et al.
5,713,896 A 2/1998 Nardella
5,713,920 A 2/1998 Bezwada et al.
5,715,604 A 2/1998 Lanzoni
5,715,836 A 2/1998 Kliegis et al.
5,715,987 A 2/1998 Kelley et al.
5,715,988 A 2/1998 Palmer
5,716,352 A 2/1998 Viola et al.
5,716,366 A 2/1998 Yates
5,718,359 A 2/1998 Palmer et al.

(56) **References Cited**

U.S. PATENT DOCUMENTS

5,718,360 A 2/1998 Green et al.
5,718,548 A 2/1998 Cotellessa
5,718,714 A 2/1998 Livneh
5,720,744 A 2/1998 Eggleston et al.
D393,067 S 3/1998 Geary et al.
5,724,025 A 3/1998 Tavori
5,725,536 A 3/1998 Oberlin et al.
5,725,554 A 3/1998 Simon et al.
5,728,110 A 3/1998 Vidal et al.
5,728,113 A 3/1998 Sherts
5,728,121 A 3/1998 Bimbo et al.
5,730,758 A 3/1998 Allgeyer
5,732,712 A 3/1998 Adair
5,732,821 A 3/1998 Stone et al.
5,732,871 A 3/1998 Clark et al.
5,732,872 A 3/1998 Bolduc et al.
5,733,308 A 3/1998 Daugherty et al.
5,735,445 A 4/1998 Vidal et al.
5,735,848 A 4/1998 Yates et al.
5,735,874 A 4/1998 Measamer et al.
5,736,271 A 4/1998 Cisar et al.
5,738,474 A 4/1998 Blewett
5,738,629 A 4/1998 Moll et al.
5,738,648 A 4/1998 Lands et al.
5,741,271 A 4/1998 Nakao et al.
5,743,456 A 4/1998 Jones et al.
5,746,770 A 5/1998 Zeitels et al.
5,747,953 A 5/1998 Philipp
5,749,889 A 5/1998 Bacich et al.
5,749,893 A 5/1998 Vidal et al.
5,749,896 A 5/1998 Cook
5,749,968 A 5/1998 Melanson et al.
5,752,644 A 5/1998 Bolanos et al.
5,752,965 A 5/1998 Francis et al.
5,752,970 A 5/1998 Yoon
5,752,973 A 5/1998 Kieturakis
5,755,717 A 5/1998 Yates et al.
5,755,726 A 5/1998 Pratt et al.
5,758,814 A 6/1998 Gallagher et al.
5,762,255 A 6/1998 Chrisman et al.
5,762,256 A 6/1998 Mastri et al.
5,762,458 A 6/1998 Wang et al.
5,765,565 A 6/1998 Adair
5,766,186 A 6/1998 Faraz et al.
5,766,188 A 6/1998 Igaki
5,766,205 A 6/1998 Zvenyatsky et al.
5,769,303 A 6/1998 Knodel et al.
5,769,640 A 6/1998 Jacobus et al.
5,769,748 A 6/1998 Eyerly et al.
5,769,791 A 6/1998 Benaron et al.
5,769,892 A 6/1998 Kingwell
5,772,099 A 6/1998 Gravener
5,772,379 A 6/1998 Evensen
5,772,578 A 6/1998 Heimberger et al.
5,772,659 A 6/1998 Becker et al.
5,773,991 A 6/1998 Chen
5,776,130 A 7/1998 Buysse et al.
5,778,939 A 7/1998 Hok-Yin
5,779,130 A 7/1998 Alesi et al.
5,779,131 A 7/1998 Knodel et al.
5,779,132 A 7/1998 Knodel et al.
5,782,396 A 7/1998 Mastri et al.
5,782,397 A 7/1998 Koukline
5,782,748 A 7/1998 Palmer et al.
5,782,749 A 7/1998 Riza
5,782,859 A 7/1998 Nicholas et al.
5,784,934 A 7/1998 Izumisawa
5,785,232 A 7/1998 Vidal et al.
5,785,647 A 7/1998 Tompkins et al.
5,787,897 A 8/1998 Kieturakis
5,791,231 A 8/1998 Cohn et al.
5,792,135 A 8/1998 Madhani et al.
5,792,162 A 8/1998 Jolly et al.
5,792,165 A 8/1998 Klieman et al.
5,792,573 A 8/1998 Pitzen et al.
5,794,834 A 8/1998 Hamblin et al.
5,796,188 A 8/1998 Bays
5,797,536 A 8/1998 Smith et al.
5,797,537 A 8/1998 Oberlin et al.
5,797,538 A 8/1998 Heaton et al.
5,797,637 A 8/1998 Ervin
5,797,900 A 8/1998 Madhani et al.
5,797,906 A 8/1998 Rhum et al.
5,797,927 A 8/1998 Yoon
5,797,941 A 8/1998 Schulze et al.
5,797,959 A 8/1998 Castro et al.
5,798,752 A 8/1998 Buxton et al.
5,799,857 A 9/1998 Robertson et al.
5,800,379 A 9/1998 Edwards
5,800,423 A 9/1998 Jensen
5,804,726 A 9/1998 Geib et al.
5,804,936 A 9/1998 Brodsky et al.
5,806,676 A 9/1998 Wasgien
5,807,241 A 9/1998 Heimberger
5,807,376 A 9/1998 Viola et al.
5,807,378 A 9/1998 Jensen et al.
5,807,393 A 9/1998 Williamson, IV et al.
5,809,441 A 9/1998 McKee
5,810,240 A 9/1998 Robertson
5,810,721 A 9/1998 Mueller et al.
5,810,811 A 9/1998 Yates et al.
5,810,846 A 9/1998 Virnich et al.
5,810,855 A 9/1998 Rayburn et al.
5,812,188 A 9/1998 Adair
5,813,813 A 9/1998 Daum et al.
5,814,055 A 9/1998 Knodel et al.
5,814,057 A 9/1998 Oi et al.
5,816,471 A 10/1998 Plyley et al.
5,817,084 A 10/1998 Jensen
5,817,091 A 10/1998 Nardella et al.
5,817,093 A 10/1998 Williamson, IV et al.
5,817,109 A 10/1998 McGarry et al.
5,817,119 A 10/1998 Klieman et al.
5,820,009 A 10/1998 Melling et al.
5,823,066 A 10/1998 Huitema et al.
5,824,333 A 10/1998 Scopelianos et al.
5,826,776 A 10/1998 Schulze et al.
5,827,271 A 10/1998 Buysse et al.
5,827,298 A 10/1998 Hart et al.
5,827,323 A 10/1998 Klieman et al.
5,829,662 A 11/1998 Allen et al.
5,830,598 A 11/1998 Patterson
5,833,690 A 11/1998 Yates et al.
5,833,695 A 11/1998 Yoon
5,833,696 A 11/1998 Whitfield et al.
5,836,503 A 11/1998 Ehrenfels et al.
5,836,960 A 11/1998 Kolesa et al.
5,839,369 A 11/1998 Chatterjee et al.
5,839,639 A 11/1998 Sauer et al.
5,841,284 A 11/1998 Takahashi
5,843,021 A 12/1998 Edwards et al.
5,843,096 A 12/1998 Igaki et al.
5,843,097 A 12/1998 Mayenberger et al.
5,843,122 A 12/1998 Riza
5,843,132 A 12/1998 Ilvento
5,843,169 A 12/1998 Taheri
5,846,254 A 12/1998 Schulze et al.
5,847,566 A 12/1998 Marritt et al.
5,849,011 A 12/1998 Jones et al.
5,849,020 A 12/1998 Long et al.
5,849,023 A 12/1998 Mericle
5,851,179 A 12/1998 Ritson et al.
5,851,212 A 12/1998 Zirps et al.
5,853,366 A 12/1998 Dowlatshahi
5,855,311 A 1/1999 Hamblin et al.
5,855,583 A 1/1999 Wang et al.
5,860,581 A 1/1999 Robertson et al.
5,860,975 A 1/1999 Goble et al.
5,865,361 A 2/1999 Milliman et al.
5,865,638 A 2/1999 Trafton
5,868,361 A 2/1999 Rinderer
5,868,664 A 2/1999 Speier et al.
5,868,760 A 2/1999 McGuckin, Jr.
5,868,790 A 2/1999 Vincent et al.

(56) **References Cited**

U.S. PATENT DOCUMENTS

5,871,135	A	2/1999	Williamson IV et al.
5,873,885	A	2/1999	Weidenbenner
5,876,401	A	3/1999	Schulze et al.
5,878,193	A	3/1999	Wang et al.
5,878,607	A	3/1999	Nunes et al.
5,878,937	A	3/1999	Green et al.
5,878,938	A	3/1999	Bittner et al.
5,881,777	A	3/1999	Bassi et al.
5,881,943	A	3/1999	Heck et al.
5,891,094	A	4/1999	Masterson et al.
5,891,160	A	4/1999	Williamson, IV et al.
5,891,558	A	4/1999	Bell et al.
5,893,506	A	4/1999	Powell
5,893,835	A	4/1999	Witt et al.
5,893,855	A	4/1999	Jacobs
5,893,863	A	4/1999	Yoon
5,893,878	A	4/1999	Pierce
5,894,979	A	4/1999	Powell
5,897,552	A	4/1999	Edwards et al.
5,897,562	A	4/1999	Bolanos et al.
5,899,824	A	5/1999	Kurtz et al.
5,899,914	A	5/1999	Zirps et al.
5,901,895	A	5/1999	Heaton et al.
5,902,312	A	5/1999	Frater et al.
5,903,117	A	5/1999	Gregory
5,904,647	A	5/1999	Ouchi
5,904,693	A	5/1999	Dicesare et al.
5,904,702	A	5/1999	Ek et al.
5,906,577	A	5/1999	Beane et al.
5,906,625	A	5/1999	Bito et al.
5,907,211	A	5/1999	Hall et al.
5,907,664	A	5/1999	Wang et al.
5,908,149	A	6/1999	Welch et al.
5,908,402	A	6/1999	Blythe
5,908,427	A	6/1999	McKean et al.
5,909,062	A	6/1999	Krietzman
5,911,353	A	6/1999	Bolanos et al.
5,915,616	A	6/1999	Viola et al.
5,916,225	A	6/1999	Kugel
5,918,791	A	7/1999	Sorrentino et al.
5,919,198	A	7/1999	Graves, Jr. et al.
5,921,956	A	7/1999	Grinberg et al.
5,922,001	A	7/1999	Yoon
5,922,003	A	7/1999	Anctil et al.
5,924,864	A	7/1999	Loge et al.
5,928,137	A	7/1999	Green
5,928,256	A	7/1999	Riza
5,931,847	A	8/1999	Bittner et al.
5,931,853	A	8/1999	McEwen et al.
5,937,951	A	8/1999	Izuchukwu et al.
5,938,667	A	8/1999	Peyser et al.
5,941,442	A	8/1999	Geiste et al.
5,941,890	A	8/1999	Voegele et al.
5,944,172	A	8/1999	Hannula
5,944,715	A	8/1999	Goble et al.
5,946,978	A	9/1999	Yamashita
5,947,984	A	9/1999	Whipple
5,947,996	A	9/1999	Logeman
5,948,030	A	9/1999	Miller et al.
5,948,429	A	9/1999	Bell et al.
5,951,301	A	9/1999	Younker
5,951,516	A	9/1999	Bunyan
5,951,552	A	9/1999	Long et al.
5,951,574	A	9/1999	Stefanchik et al.
5,951,575	A	9/1999	Bolduc et al.
5,951,581	A	9/1999	Saadat et al.
5,954,259	A	9/1999	Viola et al.
5,957,831	A	9/1999	Adair
5,964,394	A	10/1999	Robertson
5,964,774	A	10/1999	McKean et al.
5,966,126	A	10/1999	Szabo
5,971,916	A	10/1999	Koren
5,973,221	A	10/1999	Collyer et al.
D416,089	S	11/1999	Barton et al.
5,976,122	A	11/1999	Madhani et al.
5,977,746	A	11/1999	Hershberger et al.
5,980,248	A	11/1999	Kusakabe et al.
5,980,569	A	11/1999	Scirica
5,984,949	A	11/1999	Levin
5,988,479	A	11/1999	Palmer
5,990,379	A	11/1999	Gregory
5,993,466	A	11/1999	Yoon
5,997,528	A	12/1999	Bisch et al.
5,997,552	A	12/1999	Person et al.
6,001,108	A	12/1999	Wang et al.
6,003,517	A	12/1999	Sheffield et al.
6,004,319	A	12/1999	Goble et al.
6,004,335	A	12/1999	Vaitekunas et al.
6,007,521	A	12/1999	Bidwell et al.
6,010,054	A	1/2000	Johnson et al.
6,010,513	A	1/2000	Tormala et al.
6,010,520	A	1/2000	Pattison
6,012,494	A	1/2000	Balazs
6,013,076	A	1/2000	Goble et al.
6,013,991	A	1/2000	Philipp
6,015,406	A	1/2000	Goble et al.
6,015,417	A	1/2000	Reynolds, Jr.
6,017,322	A	1/2000	Snoke et al.
6,017,354	A	1/2000	Culp et al.
6,017,356	A	1/2000	Frederick et al.
6,018,227	A	1/2000	Kumar et al.
6,019,745	A	2/2000	Gray
6,019,780	A	2/2000	Lombardo et al.
6,022,352	A	2/2000	Vandewalle
6,023,275	A	2/2000	Horvitz et al.
6,023,641	A	2/2000	Thompson
6,024,708	A	2/2000	Bales et al.
6,024,741	A	2/2000	Williamson, IV et al.
6,024,748	A	2/2000	Manzo et al.
6,024,750	A	2/2000	Mastri et al.
6,024,764	A	2/2000	Schroeppel
6,027,501	A	2/2000	Goble et al.
6,030,384	A	2/2000	Nezhat
6,032,849	A	3/2000	Mastri et al.
6,033,105	A	3/2000	Barker et al.
6,033,378	A	3/2000	Lundquist et al.
6,033,399	A	3/2000	Gines
6,033,427	A	3/2000	Lee
6,036,641	A	3/2000	Taylor et al.
6,036,667	A	3/2000	Manna et al.
6,037,724	A	3/2000	Buss et al.
6,037,927	A	3/2000	Rosenberg
6,039,126	A	3/2000	Hsieh
6,039,733	A	3/2000	Buysse et al.
6,039,734	A	3/2000	Goble
6,042,601	A	3/2000	Smith
6,042,607	A	3/2000	Williamson, IV et al.
6,043,626	A	3/2000	Snyder et al.
6,045,560	A	4/2000	McKean et al.
6,047,861	A	4/2000	Vidal et al.
6,049,145	A	4/2000	Austin et al.
6,050,172	A	4/2000	Corves et al.
6,050,472	A	4/2000	Shibata
6,050,989	A	4/2000	Fox et al.
6,050,990	A	4/2000	Tankovich et al.
6,050,996	A	4/2000	Schmaltz et al.
6,053,390	A	4/2000	Green et al.
6,053,899	A	4/2000	Slanda et al.
6,053,922	A	4/2000	Krause et al.
6,054,142	A	4/2000	Li et al.
6,055,062	A	4/2000	Dina et al.
RE36,720	E	5/2000	Green et al.
6,056,735	A	5/2000	Okada et al.
6,056,746	A	5/2000	Goble et al.
6,059,806	A	5/2000	Hoegerle
6,062,360	A	5/2000	Shields
6,063,020	A	5/2000	Jones et al.
6,063,025	A	5/2000	Bridges et al.
6,063,050	A	5/2000	Manna et al.
6,063,095	A	5/2000	Wang et al.
6,063,097	A	5/2000	Oi et al.
6,063,098	A	5/2000	Houser et al.
6,065,679	A	5/2000	Levie et al.
6,065,919	A	5/2000	Peck

(56) **References Cited**

U.S. PATENT DOCUMENTS

6,066,132	A	5/2000	Chen et al.
6,066,151	A	5/2000	Miyawaki et al.
6,068,627	A	5/2000	Orszulak et al.
6,071,233	A	6/2000	Ishikawa et al.
6,072,299	A	6/2000	Kurle et al.
6,074,386	A	6/2000	Goble et al.
6,074,401	A	6/2000	Gardiner et al.
6,075,441	A	6/2000	Maloney
6,077,280	A	6/2000	Fossum
6,077,286	A	6/2000	Cuschieri et al.
6,077,290	A	6/2000	Marini
6,079,606	A	6/2000	Milliman et al.
6,080,181	A	6/2000	Jensen et al.
6,082,577	A	7/2000	Coates et al.
6,083,191	A	7/2000	Rose
6,083,223	A	7/2000	Baker
6,083,234	A	7/2000	Nicholas et al.
6,083,242	A	7/2000	Cook
6,086,544	A	7/2000	Hibner et al.
6,086,600	A	7/2000	Kortenbach
6,090,106	A	7/2000	Goble et al.
6,090,123	A	7/2000	Culp et al.
6,093,186	A	7/2000	Goble
6,094,021	A	7/2000	Noro et al.
D429,252	S	8/2000	Haitani et al.
6,099,537	A	8/2000	Sugai et al.
6,099,551	A	8/2000	Gabbay
6,102,271	A	8/2000	Longo et al.
6,102,926	A	8/2000	Tartaglia et al.
6,104,162	A	8/2000	Sainsbury et al.
6,104,304	A	8/2000	Clark et al.
6,106,511	A	8/2000	Jensen
6,109,500	A	8/2000	Alli et al.
6,110,187	A	8/2000	Donlon
6,113,618	A	9/2000	Nic
6,117,148	A	9/2000	Ravo et al.
6,117,158	A	9/2000	Measamer et al.
6,119,913	A	9/2000	Adams et al.
6,120,433	A	9/2000	Mizuno et al.
6,120,462	A	9/2000	Hibner et al.
6,123,241	A	9/2000	Walter et al.
6,123,701	A	9/2000	Nezhat
H1904	H	10/2000	Yates et al.
RE36,923	E	10/2000	Hiroi et al.
6,126,058	A	10/2000	Adams et al.
6,126,359	A	10/2000	Dittrich et al.
6,126,670	A	10/2000	Walker et al.
6,131,789	A	10/2000	Schulze et al.
6,131,790	A	10/2000	Piraka
6,132,368	A	10/2000	Cooper
6,134,962	A	10/2000	Sugitani
6,139,546	A	10/2000	Koenig et al.
6,142,149	A	11/2000	Steen
6,142,933	A	11/2000	Longo et al.
6,147,135	A	11/2000	Yuan et al.
6,149,660	A	11/2000	Laufer et al.
6,151,323	A	11/2000	O'Connell et al.
6,152,935	A	11/2000	Kammerer et al.
6,155,473	A	12/2000	Tompkins et al.
6,156,056	A	12/2000	Kearns et al.
6,157,169	A	12/2000	Lee
6,159,146	A	12/2000	El Gazayerli
6,159,200	A	12/2000	Verdura et al.
6,159,224	A	12/2000	Yoon
6,162,208	A	12/2000	Hipps
6,162,220	A	12/2000	Nezhat
6,162,537	A	12/2000	Martin et al.
6,165,175	A	12/2000	Wampler et al.
6,165,184	A	12/2000	Verdura et al.
6,165,188	A	12/2000	Saadat et al.
6,167,185	A	12/2000	Smiley et al.
6,168,605	B1	1/2001	Measamer et al.
6,171,305	B1	1/2001	Sherman
6,171,316	B1	1/2001	Kovac et al.
6,171,330	B1	1/2001	Benchetrit
6,173,074	B1	1/2001	Russo
6,174,308	B1	1/2001	Goble et al.
6,174,309	B1	1/2001	Wrublewski et al.
6,174,318	B1	1/2001	Bates et al.
6,175,290	B1	1/2001	Forsythe et al.
6,179,195	B1	1/2001	Adams et al.
6,179,776	B1	1/2001	Adams et al.
6,181,105	B1	1/2001	Cutolo et al.
6,182,673	B1	2/2001	Kindermann et al.
6,185,356	B1	2/2001	Parker et al.
6,186,142	B1	2/2001	Schmidt et al.
6,186,957	B1	2/2001	Milam
6,187,003	B1	2/2001	Buysse et al.
6,190,386	B1	2/2001	Rydell
6,193,129	B1	2/2001	Bittner et al.
6,197,042	B1	3/2001	Ginn et al.
6,200,311	B1	3/2001	Danek et al.
6,200,330	B1	3/2001	Benderev et al.
6,202,914	B1	3/2001	Geiste et al.
6,206,894	B1	3/2001	Thompson et al.
6,206,897	B1	3/2001	Jamiolkowski et al.
6,206,903	B1	3/2001	Ramans
6,206,904	B1	3/2001	Ouchi
6,209,414	B1	4/2001	Uneme
6,210,403	B1	4/2001	Klicek
6,211,626	B1	4/2001	Lys et al.
6,213,999	B1	4/2001	Platt, Jr. et al.
6,214,028	B1	4/2001	Yoon et al.
6,220,368	B1	4/2001	Ark et al.
6,221,007	B1	4/2001	Green
6,221,023	B1	4/2001	Matsuba et al.
6,223,100	B1	4/2001	Green
6,223,835	B1	5/2001	Habedank et al.
6,224,617	B1	5/2001	Saadat et al.
6,228,080	B1	5/2001	Gines
6,228,081	B1	5/2001	Goble
6,228,083	B1	5/2001	Lands et al.
6,228,084	B1	5/2001	Kirwan, Jr.
6,228,089	B1	5/2001	Wahrburg
6,228,098	B1	5/2001	Kayan et al.
6,231,565	B1	5/2001	Tovey et al.
6,234,178	B1	5/2001	Goble et al.
6,235,036	B1	5/2001	Gardner et al.
6,237,604	B1	5/2001	Burnside et al.
6,238,384	B1	5/2001	Peer
6,241,139	B1	6/2001	Milliman et al.
6,241,140	B1	6/2001	Adams et al.
6,241,723	B1	6/2001	Heim et al.
6,245,084	B1	6/2001	Mark et al.
6,248,116	B1	6/2001	Chevillon et al.
6,248,117	B1	6/2001	Blatter
6,249,076	B1	6/2001	Madden et al.
6,249,105	B1	6/2001	Andrews et al.
6,250,532	B1	6/2001	Green et al.
6,251,485	B1	6/2001	Harris et al.
D445,745	S	7/2001	Norman
6,254,534	B1	7/2001	Butler et al.
6,254,619	B1	7/2001	Garabet et al.
6,254,642	B1	7/2001	Taylor
6,258,107	B1	7/2001	Balazs et al.
6,261,246	B1	7/2001	Pantages et al.
6,261,286	B1	7/2001	Goble et al.
6,261,679	B1	7/2001	Chen et al.
6,264,086	B1	7/2001	McGuckin, Jr.
6,264,087	B1	7/2001	Whitman
6,264,617	B1	7/2001	Bales et al.
6,269,997	B1	8/2001	Balazs et al.
6,270,508	B1	8/2001	Klieman et al.
6,270,916	B1	8/2001	Sink et al.
6,273,252	B1	8/2001	Mitchell
6,273,876	B1	8/2001	Klima et al.
6,273,897	B1	8/2001	Dalessandro et al.
6,277,114	B1	8/2001	Bullivant et al.
6,280,407	B1	8/2001	Manna et al.
6,283,981	B1	9/2001	Beaupre
6,293,927	B1	9/2001	McGuckin, Jr.
6,293,942	B1	9/2001	Goble et al.
6,296,640	B1	10/2001	Wampler et al.
6,302,311	B1	10/2001	Adams et al.

(56) **References Cited**

U.S. PATENT DOCUMENTS

6,302,743	B1	10/2001	Chiu et al.
6,305,891	B1	10/2001	Burlingame
6,306,134	B1	10/2001	Goble et al.
6,306,149	B1	10/2001	Meade
6,306,424	B1	10/2001	Vyakarnam et al.
6,309,397	B1	10/2001	Julian et al.
6,309,400	B2	10/2001	Beaupre
6,309,403	B1	10/2001	Minor et al.
6,312,435	B1	11/2001	Wallace et al.
6,315,184	B1	11/2001	Whitman
6,317,616	B1	11/2001	Glossop
6,319,510	B1	11/2001	Yates
6,320,123	B1	11/2001	Reimers
6,322,494	B1	11/2001	Bullivant et al.
6,324,339	B1	11/2001	Hudson et al.
6,325,799	B1	12/2001	Goble
6,325,805	B1	12/2001	Ogilvie et al.
6,325,810	B1	12/2001	Hamilton et al.
6,328,498	B1	12/2001	Mersch
6,330,965	B1	12/2001	Milliman et al.
6,331,181	B1	12/2001	Tierney et al.
6,331,761	B1	12/2001	Kumar et al.
6,333,029	B1	12/2001	Vyakarnam et al.
6,334,860	B1	1/2002	Dorn
6,334,861	B1	1/2002	Chandler et al.
6,336,926	B1	1/2002	Goble
6,338,737	B1	1/2002	Toledano
6,338,738	B1	1/2002	Bellotti et al.
6,343,731	B1	2/2002	Adams et al.
6,346,077	B1	2/2002	Taylor et al.
6,348,061	B1	2/2002	Whitman
6,349,868	B1	2/2002	Mattingly et al.
D454,951	S	3/2002	Bon
6,352,503	B1	3/2002	Matsui et al.
6,352,532	B1	3/2002	Kramer et al.
6,355,699	B1	3/2002	Vyakarnam et al.
6,356,072	B1	3/2002	Chass
6,358,224	B1	3/2002	Tims et al.
6,358,263	B2	3/2002	Mark et al.
6,358,459	B1	3/2002	Ziegler et al.
6,361,542	B1	3/2002	Dimitriu et al.
6,364,828	B1	4/2002	Yeung et al.
6,364,877	B1	4/2002	Goble et al.
6,364,888	B1	4/2002	Niemeyer et al.
6,366,441	B1	4/2002	Ozawa et al.
6,370,981	B2	4/2002	Watarai
6,371,114	B1	4/2002	Schmidt et al.
6,373,152	B1	4/2002	Wang et al.
6,377,011	B1	4/2002	Ben-Ur
6,383,201	B1	5/2002	Dong
6,387,092	B1	5/2002	Burnside et al.
6,387,113	B1	5/2002	Hawkins et al.
6,387,114	B2	5/2002	Adams
6,391,038	B2	5/2002	Vargas et al.
6,392,854	B1	5/2002	O'Gorman
6,394,998	B1	5/2002	Wallace et al.
6,398,779	B1	6/2002	Buysse et al.
6,398,781	B1	6/2002	Goble et al.
6,398,797	B2	6/2002	Bombard et al.
6,402,766	B2	6/2002	Bowman et al.
6,402,780	B2	6/2002	Williamson, IV et al.
6,406,440	B1	6/2002	Stefanchik
6,406,472	B1	6/2002	Jensen
6,409,724	B1	6/2002	Penny et al.
H2037	H	7/2002	Yates et al.
6,412,639	B1	7/2002	Hickey
6,413,274	B1	7/2002	Pedros
6,415,542	B1	7/2002	Bates et al.
6,416,486	B1	7/2002	Wampler
6,416,509	B1	7/2002	Goble et al.
6,419,695	B1	7/2002	Gabbay
6,423,079	B1	7/2002	Blake, III
6,424,885	B1	7/2002	Niemeyer et al.
RE37,814	E	8/2002	Allgeyer
6,428,070	B1	8/2002	Takanashi et al.
6,428,487	B1	8/2002	Burdorff et al.
6,429,611	B1	8/2002	Li
6,430,298	B1	8/2002	Kettl et al.
6,432,065	B1	8/2002	Burdorff et al.
6,436,097	B1	8/2002	Nardella
6,436,107	B1	8/2002	Wang et al.
6,436,110	B2	8/2002	Bowman et al.
6,436,115	B1	8/2002	Beaupre
6,436,122	B1	8/2002	Frank et al.
6,439,439	B1	8/2002	Rickard et al.
6,439,446	B1	8/2002	Perry et al.
6,440,146	B2	8/2002	Nicholas et al.
6,441,577	B2	8/2002	Blumenkranz et al.
D462,758	S	9/2002	Epstein et al.
6,443,973	B1	9/2002	Whitman
6,445,530	B1	9/2002	Baker
6,447,518	B1	9/2002	Krause et al.
6,447,523	B1	9/2002	Middleman et al.
6,447,799	B1	9/2002	Ullman
6,447,864	B2	9/2002	Johnson et al.
6,450,391	B1	9/2002	Kayan et al.
6,450,989	B2	9/2002	Dubrul et al.
6,454,656	B2	9/2002	Brissette et al.
6,454,781	B1	9/2002	Witt et al.
6,457,338	B1	10/2002	Frenken
6,457,625	B1	10/2002	Tormala et al.
6,458,077	B1	10/2002	Boebel et al.
6,458,142	B1	10/2002	Faller et al.
6,458,147	B1	10/2002	Cruise et al.
6,460,627	B1	10/2002	Below et al.
6,463,824	B1	10/2002	Prell et al.
6,468,275	B1	10/2002	Wampler et al.
6,468,286	B2	10/2002	Mastri et al.
6,471,106	B1	10/2002	Reining
6,471,659	B2	10/2002	Eggers et al.
6,478,210	B2	11/2002	Adams et al.
6,482,063	B1	11/2002	Frigard
6,482,200	B2	11/2002	Shippert
6,482,217	B1	11/2002	Pintor et al.
6,485,490	B2	11/2002	Wampler et al.
6,485,503	B2	11/2002	Jacobs et al.
6,485,667	B1	11/2002	Tan
6,486,286	B1	11/2002	McGall et al.
6,488,196	B1	12/2002	Fenton, Jr.
6,488,197	B1	12/2002	Whitman
6,488,659	B1	12/2002	Rosenman
6,491,201	B1	12/2002	Whitman
6,491,690	B1	12/2002	Goble et al.
6,491,701	B2	12/2002	Tierney et al.
6,491,702	B2	12/2002	Heilbrun et al.
6,492,785	B1	12/2002	Kasten et al.
6,494,882	B1	12/2002	Lebouitz et al.
6,494,885	B1	12/2002	Dhindsa
6,494,888	B1	12/2002	Laufer et al.
6,494,896	B1	12/2002	D'Alessio et al.
6,498,480	B1	12/2002	Manara
6,500,176	B1	12/2002	Truckai et al.
6,500,189	B1	12/2002	Lang et al.
6,500,194	B2	12/2002	Benderev et al.
D468,749	S	1/2003	Friedman
6,503,139	B2	1/2003	Coral
6,503,257	B2	1/2003	Grant et al.
6,503,259	B2	1/2003	Huxel et al.
6,505,768	B2	1/2003	Whitman
6,506,197	B1	1/2003	Rollero et al.
6,506,399	B2	1/2003	Donovan
6,510,854	B2	1/2003	Goble
6,511,468	B1	1/2003	Cragg et al.
6,512,360	B1	1/2003	Goto et al.
6,514,252	B2	2/2003	Nezhat et al.
6,516,073	B1	2/2003	Schulz et al.
6,517,528	B1	2/2003	Pantages et al.
6,517,535	B2	2/2003	Edwards
6,517,565	B1	2/2003	Whitman et al.
6,517,566	B1	2/2003	Hovland et al.
6,520,971	B1	2/2003	Perry et al.
6,520,972	B2	2/2003	Peters
6,522,101	B2	2/2003	Malackowski
6,524,180	B1	2/2003	Simms et al.

(56) **References Cited**

U.S. PATENT DOCUMENTS

6,525,499	B2	2/2003	Naganuma
D471,206	S	3/2003	Buzzard et al.
6,527,782	B2	3/2003	Hogg et al.
6,527,785	B2	3/2003	Sancoff et al.
6,530,942	B2	3/2003	Fogarty et al.
6,532,958	B1	3/2003	Buan et al.
6,533,157	B1	3/2003	Whitman
6,533,723	B1	3/2003	Lockery et al.
6,533,784	B2	3/2003	Truckai et al.
6,535,764	B2	3/2003	Imran et al.
6,539,297	B2	3/2003	Weiberle et al.
D473,239	S	4/2003	Cockerill
6,539,816	B2	4/2003	Kogiso et al.
6,540,737	B2	4/2003	Bacher et al.
6,543,456	B1	4/2003	Freeman
6,545,384	B1	4/2003	Pelrine et al.
6,547,786	B1	4/2003	Goble
6,550,546	B2	4/2003	Thurler et al.
6,551,333	B2	4/2003	Kuhns et al.
6,554,844	B2	4/2003	Lee et al.
6,554,861	B2	4/2003	Knox et al.
6,555,770	B2	4/2003	Kawase
6,558,378	B2	5/2003	Sherman et al.
6,558,379	B1	5/2003	Batchelor et al.
6,558,429	B2	5/2003	Taylor
6,561,187	B2	5/2003	Schmidt et al.
6,565,560	B1	5/2003	Goble et al.
6,566,619	B2	5/2003	Gillman et al.
6,569,085	B2	5/2003	Kortenbach et al.
6,569,171	B2	5/2003	DeGuillebon et al.
6,569,173	B1	5/2003	Blatter et al.
6,572,629	B2	6/2003	Kalloo et al.
6,575,969	B1	6/2003	Rittman, III et al.
6,578,751	B2	6/2003	Hartwick
6,582,364	B2	6/2003	Butler et al.
6,582,427	B1	6/2003	Goble et al.
6,582,441	B1	6/2003	He et al.
6,583,533	B2	6/2003	Pelrine et al.
6,585,144	B2	7/2003	Adams et al.
6,585,664	B2	7/2003	Burdorff et al.
6,586,898	B2	7/2003	King et al.
6,587,750	B2	7/2003	Gerbi et al.
6,588,277	B2	7/2003	Giordano et al.
6,588,643	B2	7/2003	Bolduc et al.
6,588,931	B2	7/2003	Betzner et al.
6,589,118	B1	7/2003	Soma et al.
6,589,164	B1	7/2003	Flaherty
6,592,538	B1	7/2003	Hotchkiss et al.
6,592,572	B1	7/2003	Suzuta
6,592,597	B2	7/2003	Grant et al.
6,594,552	B1	7/2003	Nowlin et al.
6,595,914	B2	7/2003	Kato
6,596,296	B1	7/2003	Nelson et al.
6,596,304	B1	7/2003	Bayon et al.
6,596,432	B2	7/2003	Kawakami et al.
6,599,295	B1	7/2003	Tornier et al.
6,599,323	B2	7/2003	Melican et al.
D478,665	S	8/2003	Isaacs et al.
D478,986	S	8/2003	Johnston et al.
6,601,749	B2	8/2003	Sullivan et al.
6,602,252	B2	8/2003	Mollenauer
6,602,262	B2	8/2003	Griego et al.
6,603,050	B2	8/2003	Heaton
6,605,078	B2	8/2003	Adams
6,605,669	B2	8/2003	Awokola et al.
6,605,911	B1	8/2003	Klesing
6,607,475	B2	8/2003	Doyle et al.
6,611,793	B1	8/2003	Burnside et al.
6,613,069	B2	9/2003	Boyd et al.
6,616,686	B2	9/2003	Coleman et al.
6,619,529	B2	9/2003	Green et al.
6,620,111	B2	9/2003	Stephens et al.
6,620,161	B2	9/2003	Schulze et al.
6,620,166	B1	9/2003	Wenstrom, Jr. et al.
6,625,517	B1	9/2003	Bogdanov et al.
6,626,834	B2	9/2003	Dunne et al.
6,626,901	B1	9/2003	Treat et al.
6,626,938	B1	9/2003	Butaric et al.
H2086	H	10/2003	Amsler
6,629,630	B2	10/2003	Adams
6,629,974	B2	10/2003	Penny et al.
6,629,988	B2	10/2003	Weadock
6,635,838	B1	10/2003	Kornelson
6,636,412	B2	10/2003	Smith
6,638,108	B2	10/2003	Tachi
6,638,285	B2	10/2003	Gabbay
6,638,297	B1	10/2003	Huitema
RE38,335	E	11/2003	Aust et al.
6,641,528	B2	11/2003	Torii
6,644,532	B2	11/2003	Green et al.
6,645,201	B1	11/2003	Utley et al.
6,646,307	B1	11/2003	Yu et al.
6,648,816	B2	11/2003	Irion et al.
6,648,901	B2	11/2003	Fleischman et al.
6,652,595	B1	11/2003	Nicolo
D484,243	S	12/2003	Ryan et al.
D484,595	S	12/2003	Ryan et al.
D484,596	S	12/2003	Ryan et al.
6,656,177	B2	12/2003	Truckai et al.
6,656,193	B2	12/2003	Grant et al.
6,659,940	B2	12/2003	Adler
6,660,008	B1	12/2003	Foerster et al.
6,663,623	B1	12/2003	Oyama et al.
6,663,641	B1	12/2003	Kovac et al.
6,666,854	B1	12/2003	Lange
6,666,860	B1	12/2003	Takahashi
6,666,875	B1	12/2003	Sakurai et al.
6,667,825	B2	12/2003	Lu et al.
6,669,073	B2	12/2003	Milliman et al.
6,670,806	B2	12/2003	Wendt et al.
6,671,185	B2	12/2003	Duval
D484,977	S	1/2004	Ryan et al.
6,676,660	B2	1/2004	Wampler et al.
6,677,687	B2	1/2004	Ho et al.
6,679,269	B2	1/2004	Swanson
6,679,410	B2	1/2004	Wursch et al.
6,681,978	B2	1/2004	Geiste et al.
6,681,979	B2	1/2004	Whitman
6,682,527	B2	1/2004	Strul
6,682,528	B2	1/2004	Frazier et al.
6,682,544	B2	1/2004	Mastri et al.
6,685,698	B2	2/2004	Morley et al.
6,685,727	B2	2/2004	Fisher et al.
6,689,153	B1	2/2004	Skiba
6,692,507	B2	2/2004	Pugsley et al.
6,692,692	B2	2/2004	Stetzel
6,695,198	B2	2/2004	Adams et al.
6,695,199	B2	2/2004	Whitman
6,695,774	B2	2/2004	Hale et al.
6,695,849	B2	2/2004	Michelson
6,696,814	B2	2/2004	Henderson et al.
6,697,048	B2	2/2004	Rosenberg et al.
6,698,643	B2	3/2004	Whitman
6,699,177	B1	3/2004	Wang et al.
6,699,214	B2	3/2004	Gellman
6,699,235	B2	3/2004	Wallace et al.
6,704,210	B1	3/2004	Myers
6,705,503	B1	3/2004	Pedicini et al.
6,709,445	B2	3/2004	Boebel et al.
6,712,773	B1	3/2004	Viola
6,716,215	B1	4/2004	David et al.
6,716,223	B2	4/2004	Leopold et al.
6,716,232	B1	4/2004	Vidal et al.
6,716,233	B1	4/2004	Whitman
6,720,734	B2	4/2004	Norris
6,722,550	B1	4/2004	Ricordi et al.
6,722,552	B2	4/2004	Fenton, Jr.
6,723,087	B2	4/2004	O'Neill et al.
6,723,091	B2	4/2004	Goble et al.
6,723,106	B1	4/2004	Charles et al.
6,723,109	B2	4/2004	Solingen
6,726,651	B1	4/2004	Robinson et al.
6,726,697	B2	4/2004	Nicholas et al.
6,726,705	B2	4/2004	Peterson et al.

(56) **References Cited**

U.S. PATENT DOCUMENTS

6,726,706	B2	4/2004	Dominguez
6,729,119	B2	5/2004	Schnipke et al.
6,731,976	B2	5/2004	Penn et al.
6,736,810	B2	5/2004	Hoey et al.
6,736,825	B2	5/2004	Blatter et al.
6,736,854	B2	5/2004	Vadurro et al.
6,740,030	B2	5/2004	Martone et al.
6,743,230	B2	6/2004	Lutze et al.
6,744,385	B2	6/2004	Kazuya et al.
6,747,121	B2	6/2004	Gogolewski
6,747,300	B2	6/2004	Nadd et al.
6,749,560	B1	6/2004	Konstorum et al.
6,749,600	B1	6/2004	Levy
6,752,768	B2	6/2004	Burdorff et al.
6,752,816	B2	6/2004	Culp et al.
6,754,959	B1	6/2004	Guiette, III et al.
6,755,195	B1	6/2004	Lemke et al.
6,755,338	B2	6/2004	Hahnen et al.
6,755,825	B2	6/2004	Shoenman et al.
6,755,843	B2	6/2004	Chung et al.
6,756,705	B2	6/2004	Pulford, Jr.
6,758,846	B2	7/2004	Goble et al.
6,761,685	B2	7/2004	Adams et al.
6,762,339	B1	7/2004	Klun et al.
6,763,307	B2	7/2004	Berg et al.
6,764,445	B2	7/2004	Ramans et al.
6,766,957	B2	7/2004	Matsuura et al.
6,767,352	B2	7/2004	Field et al.
6,767,356	B2	7/2004	Kanner et al.
6,769,590	B2	8/2004	Vresh et al.
6,769,594	B2	8/2004	Orban, III
6,770,027	B2	8/2004	Banik et al.
6,770,070	B1	8/2004	Balbierz
6,770,072	B1	8/2004	Truckai et al.
6,770,078	B2	8/2004	Bonutti
6,773,409	B2	8/2004	Truckai et al.
6,773,437	B2	8/2004	Ogilvie et al.
6,773,438	B1	8/2004	Knodel et al.
6,773,458	B1	8/2004	Brauker et al.
6,775,575	B2	8/2004	Bommannan et al.
6,777,838	B2	8/2004	Miekka et al.
6,778,846	B1	8/2004	Martinez et al.
6,780,151	B2	8/2004	Grabover et al.
6,780,180	B1	8/2004	Goble et al.
6,783,524	B2	8/2004	Anderson et al.
6,784,775	B2	8/2004	Mandell et al.
6,786,382	B1	9/2004	Hoffman
6,786,864	B2	9/2004	Matsuura et al.
6,786,896	B1	9/2004	Madhani et al.
6,788,018	B1	9/2004	Blumenkranz
6,790,173	B2	9/2004	Saadat et al.
6,793,652	B1	9/2004	Whitman et al.
6,793,661	B2	9/2004	Hamilton et al.
6,793,663	B2	9/2004	Kneifel et al.
6,793,669	B2	9/2004	Nakamura et al.
6,796,921	B1	9/2004	Buck et al.
6,799,669	B2	10/2004	Fukumura et al.
6,801,009	B2	10/2004	Makaran et al.
6,802,822	B1	10/2004	Dodge
6,802,843	B2	10/2004	Truckai et al.
6,802,844	B2	10/2004	Ferree
6,805,273	B2	10/2004	Bilotti et al.
6,806,808	B1	10/2004	Watters et al.
6,806,867	B1	10/2004	Arruda et al.
6,808,525	B2	10/2004	Latterell et al.
6,810,359	B2	10/2004	Sakaguchi
6,814,154	B2	11/2004	Chou
6,814,741	B2	11/2004	Bowman et al.
6,817,508	B1	11/2004	Racenet et al.
6,817,509	B2	11/2004	Geiste et al.
6,817,974	B2	11/2004	Cooper et al.
6,818,018	B1	11/2004	Sawhney
6,820,791	B2	11/2004	Adams
6,821,273	B2	11/2004	Mollenauer
6,821,282	B2	11/2004	Perry et al.
6,821,284	B2	11/2004	Sturtz et al.
6,827,246	B2	12/2004	Sullivan et al.
6,827,712	B2	12/2004	Tovey et al.
6,827,725	B2	12/2004	Batchelor et al.
6,828,902	B2	12/2004	Casden
6,830,174	B2	12/2004	Hillstead et al.
6,831,629	B2	12/2004	Nishino et al.
6,832,998	B2	12/2004	Goble
6,834,001	B2	12/2004	Myono
6,835,173	B2	12/2004	Couvillon, Jr.
6,835,199	B2	12/2004	McGuckin, Jr. et al.
6,835,336	B2	12/2004	Watt
6,836,611	B2	12/2004	Popovic et al.
6,837,846	B2	1/2005	Jaffe et al.
6,837,883	B2	1/2005	Moll et al.
6,838,493	B2	1/2005	Williams et al.
6,840,423	B2	1/2005	Adams et al.
6,840,938	B1	1/2005	Morley et al.
6,841,967	B2	1/2005	Kim et al.
6,843,403	B2	1/2005	Whitman
6,843,789	B2	1/2005	Goble
6,843,793	B2	1/2005	Brock et al.
6,846,307	B2	1/2005	Whitman et al.
6,846,308	B2	1/2005	Whitman et al.
6,846,309	B2	1/2005	Whitman et al.
6,847,190	B2	1/2005	Schaefer et al.
6,849,071	B2	2/2005	Whitman et al.
6,850,817	B1	2/2005	Green
6,852,122	B2	2/2005	Rush
6,852,330	B2	2/2005	Bowman et al.
6,853,879	B2	2/2005	Sunaoshi
6,858,005	B2	2/2005	Ohline et al.
6,859,882	B2	2/2005	Fung
RE38,708	E	3/2005	Bolanos et al.
D502,994	S	3/2005	Blake, III
6,860,169	B2	3/2005	Shinozaki
6,861,142	B1	3/2005	Wilkie et al.
6,861,954	B2	3/2005	Levin
6,863,668	B2	3/2005	Gillespie et al.
6,863,694	B1	3/2005	Boyce et al.
6,863,924	B2	3/2005	Ranganathan et al.
6,866,178	B2	3/2005	Adams et al.
6,866,668	B2	3/2005	Giannetti et al.
6,866,671	B2	3/2005	Tierney et al.
6,867,248	B1	3/2005	Martin et al.
6,869,430	B2	3/2005	Balbierz et al.
6,869,435	B2	3/2005	Blake, III
6,872,214	B2	3/2005	Sonnenschein et al.
6,874,669	B2	4/2005	Adams et al.
6,876,850	B2	4/2005	Maeshima et al.
6,877,647	B2	4/2005	Green et al.
6,878,106	B1	4/2005	Herrmann
6,882,127	B2	4/2005	Konigbauer
6,883,199	B1	4/2005	Lundell et al.
6,884,392	B2	4/2005	Malkin et al.
6,884,428	B2	4/2005	Binette et al.
6,886,730	B2	5/2005	Fujisawa et al.
6,887,244	B1	5/2005	Walker et al.
6,887,710	B2	5/2005	Call et al.
6,889,116	B2	5/2005	Jinno
6,893,435	B2	5/2005	Goble
6,894,140	B2	5/2005	Roby
6,895,176	B2	5/2005	Archer et al.
6,899,538	B2	5/2005	Matoba
6,899,593	B1	5/2005	Moeller et al.
6,899,705	B2	5/2005	Niemeyer
6,899,915	B2	5/2005	Yelick et al.
6,905,057	B2	6/2005	Swayze et al.
6,905,497	B2	6/2005	Truckai et al.
6,905,498	B2	6/2005	Hooven
6,908,472	B2	6/2005	Wiener et al.
6,911,033	B2	6/2005	de Guillebon et al.
6,911,916	B1	6/2005	Wang et al.
6,913,579	B2	7/2005	Truckai et al.
6,913,608	B2	7/2005	Liddicoat et al.
6,913,613	B2	7/2005	Schwarz et al.
6,921,397	B2	7/2005	Corcoran et al.
6,921,412	B1	7/2005	Black et al.
6,923,093	B2	8/2005	Ullah

(56) **References Cited**

U.S. PATENT DOCUMENTS

6,923,803	B2	8/2005	Goble
6,923,819	B2	8/2005	Meade et al.
6,925,849	B2	8/2005	Jairam
6,926,716	B2	8/2005	Baker et al.
6,927,315	B1	8/2005	Heinecke et al.
6,928,902	B1	8/2005	Eyssallenne
6,929,641	B2	8/2005	Goble et al.
6,929,644	B2	8/2005	Truckai et al.
6,931,830	B2	8/2005	Liao
6,932,218	B2	8/2005	Kosann et al.
6,932,810	B2	8/2005	Ryan
6,936,042	B2	8/2005	Wallace et al.
6,936,948	B2	8/2005	Bell et al.
D509,297	S	9/2005	Wells
D509,589	S	9/2005	Wells
6,938,706	B2	9/2005	Ng
6,939,358	B2	9/2005	Palacios et al.
6,942,662	B2	9/2005	Goble et al.
6,942,674	B2	9/2005	Belef et al.
6,945,444	B2	9/2005	Gresham et al.
6,945,981	B2	9/2005	Donofrio et al.
6,949,196	B2	9/2005	Schmitz et al.
6,951,562	B2	10/2005	Zwirnmann
6,953,138	B1	10/2005	Dworak et al.
6,953,139	B2	10/2005	Milliman et al.
6,953,461	B2	10/2005	McClurken et al.
6,957,758	B2	10/2005	Aranyi
6,958,035	B2	10/2005	Friedman et al.
D511,525	S	11/2005	Hernandez et al.
6,959,851	B2	11/2005	Heinrich
6,959,852	B2	11/2005	Shelton, IV et al.
6,960,107	B1	11/2005	Schaub et al.
6,960,163	B2	11/2005	Ewers et al.
6,960,220	B2	11/2005	Marino et al.
6,962,587	B2	11/2005	Johnson et al.
6,963,792	B1	11/2005	Green
6,964,363	B2	11/2005	Wales et al.
6,966,907	B2	11/2005	Goble
6,966,909	B2	11/2005	Marshall et al.
6,968,908	B2	11/2005	Tokunaga et al.
6,969,385	B2	11/2005	Moreyra
6,969,395	B2	11/2005	Eskuri
6,971,988	B2	12/2005	Orban, III
6,972,199	B2	12/2005	Lebouitz et al.
6,974,435	B2	12/2005	Daw et al.
6,974,462	B2	12/2005	Sater
6,978,921	B2	12/2005	Shelton, IV et al.
6,978,922	B2	12/2005	Bilotti et al.
6,981,628	B2	1/2006	Wales
6,981,941	B2	1/2006	Whitman et al.
6,981,978	B2	1/2006	Gannoe
6,984,203	B2	1/2006	Tartaglia et al.
6,984,231	B2	1/2006	Goble et al.
6,986,451	B1	1/2006	Mastri et al.
6,988,649	B2	1/2006	Shelton, IV et al.
6,988,650	B2	1/2006	Schwemberger et al.
6,989,034	B2	1/2006	Hammer et al.
6,990,731	B2	1/2006	Haytayan
6,990,796	B2	1/2006	Schnipke et al.
6,991,146	B2	1/2006	Sinisi et al.
6,993,200	B2	1/2006	Tastl et al.
6,993,413	B2	1/2006	Sunaoshi
6,994,708	B2	2/2006	Manzo
6,995,729	B2	2/2006	Govari et al.
6,996,433	B2	2/2006	Burbank et al.
6,997,931	B2	2/2006	Sauer et al.
6,997,935	B2	2/2006	Anderson et al.
6,998,736	B2	2/2006	Lee et al.
6,998,816	B2	2/2006	Wieck et al.
6,999,821	B2	2/2006	Jenney et al.
7,000,818	B2	2/2006	Shelton, IV et al.
7,000,819	B2	2/2006	Swayze et al.
7,000,911	B2	2/2006	McCormick et al.
7,001,380	B2	2/2006	Goble
7,001,408	B2	2/2006	Knodel et al.
7,004,174	B2	2/2006	Eggers et al.
7,005,828	B2	2/2006	Karikomi
7,007,176	B2	2/2006	Goodfellow et al.
7,008,433	B2	3/2006	Voellmicke et al.
7,008,435	B2	3/2006	Cummins
7,009,039	B2	3/2006	Yayon et al.
7,011,213	B2	3/2006	Clark et al.
7,011,657	B2	3/2006	Truckai et al.
7,014,640	B2	3/2006	Kemppainen et al.
7,018,357	B2	3/2006	Emmons
7,018,390	B2	3/2006	Turovskiy et al.
7,021,399	B2	4/2006	Driessen
7,021,669	B1	4/2006	Lindermeir et al.
7,022,131	B1	4/2006	Derowe et al.
7,023,159	B2	4/2006	Gorti et al.
7,025,064	B2	4/2006	Wang et al.
7,025,732	B2	4/2006	Thompson et al.
7,025,743	B2	4/2006	Mann et al.
7,025,774	B2	4/2006	Freeman et al.
7,025,775	B2	4/2006	Gadberry et al.
7,028,570	B2	4/2006	Ohta et al.
7,029,435	B2	4/2006	Nakao
7,029,439	B2	4/2006	Roberts et al.
7,030,904	B2	4/2006	Adair et al.
7,032,798	B2	4/2006	Whitman et al.
7,032,799	B2	4/2006	Viola et al.
7,033,356	B2	4/2006	Latterell et al.
7,033,378	B2	4/2006	Smith et al.
7,035,716	B2	4/2006	Harris et al.
7,035,762	B2	4/2006	Menard et al.
7,036,680	B1	5/2006	Flannery
7,037,314	B2	5/2006	Armstrong
7,037,344	B2	5/2006	Kagan et al.
7,038,421	B2	5/2006	Trifilo
7,041,088	B2	5/2006	Nawrocki et al.
7,041,102	B2	5/2006	Truckai et al.
7,041,868	B2	5/2006	Greene et al.
7,043,852	B2	5/2006	Hayashida et al.
7,044,350	B2	5/2006	Kameyama et al.
7,044,352	B2	5/2006	Shelton, IV et al.
7,044,353	B2	5/2006	Mastri et al.
7,046,082	B2	5/2006	Komiya et al.
7,048,165	B2	5/2006	Haramiishi
7,048,687	B1	5/2006	Reuss et al.
7,048,716	B1	5/2006	Kucharczyk et al.
7,048,745	B2	5/2006	Tierney et al.
7,052,454	B2	5/2006	Taylor
7,052,494	B2	5/2006	Goble et al.
7,052,499	B2	5/2006	Steger et al.
7,055,730	B2	6/2006	Ehrenfels et al.
7,055,731	B2	6/2006	Shelton, IV et al.
7,056,123	B2	6/2006	Gregorio et al.
7,056,284	B2	6/2006	Martone et al.
7,056,330	B2	6/2006	Gayton
7,059,331	B2	6/2006	Adams et al.
7,059,508	B2	6/2006	Shelton, IV et al.
7,063,671	B2	6/2006	Couvillon, Jr.
7,063,712	B2	6/2006	Vargas et al.
7,064,509	B1	6/2006	Fu et al.
7,066,879	B2	6/2006	Fowler et al.
7,066,944	B2	6/2006	Laufer et al.
7,067,038	B2	6/2006	Trokhan et al.
7,070,083	B2	7/2006	Jankowski
7,070,559	B2	7/2006	Adams et al.
7,070,597	B2	7/2006	Truckai et al.
7,071,287	B2	7/2006	Rhine et al.
7,075,412	B1	7/2006	Reynolds et al.
7,075,770	B1	7/2006	Smith
7,077,856	B2	7/2006	Whitman
7,080,769	B2	7/2006	Vresh et al.
7,081,114	B2	7/2006	Rashidi
7,081,318	B2	7/2006	Lee et al.
7,083,073	B2	8/2006	Yoshie et al.
7,083,075	B2	8/2006	Swayze et al.
7,083,571	B2	8/2006	Wang et al.
7,083,615	B2	8/2006	Peterson et al.
7,083,619	B2	8/2006	Truckai et al.
7,083,620	B2	8/2006	Jahns et al.
7,083,626	B2	8/2006	Hart et al.

(56) **References Cited**

U.S. PATENT DOCUMENTS

7,086,267	B2	8/2006	Dworak et al.
7,087,049	B2	8/2006	Nowlin et al.
7,087,054	B2	8/2006	Truckai et al.
7,087,071	B2	8/2006	Nicholas et al.
7,090,637	B2	8/2006	Danitz et al.
7,090,673	B2	8/2006	Dycus et al.
7,090,683	B2	8/2006	Brock et al.
7,090,684	B2	8/2006	McGuckin, Jr. et al.
7,091,191	B2	8/2006	Laredo et al.
7,091,412	B2	8/2006	Wang et al.
7,093,492	B2	8/2006	Treiber et al.
7,094,202	B2	8/2006	Nobis et al.
7,094,247	B2	8/2006	Monassevitch et al.
7,094,916	B2	8/2006	DeLuca et al.
7,096,972	B2	8/2006	Orozco, Jr.
7,097,089	B2	8/2006	Marczyk
7,097,644	B2	8/2006	Long
7,097,650	B2	8/2006	Weller et al.
7,098,794	B2	8/2006	Lindsay et al.
7,100,949	B2	9/2006	Williams et al.
7,101,187	B1	9/2006	Deconinck et al.
7,101,363	B2	9/2006	Nishizawa et al.
7,101,371	B2	9/2006	Dycus et al.
7,101,394	B2	9/2006	Hamm et al.
7,104,741	B2	9/2006	Krohn
7,108,695	B2	9/2006	Witt et al.
7,108,701	B2	9/2006	Evens et al.
7,108,709	B2	9/2006	Cummins
7,111,768	B2	9/2006	Cummins et al.
7,111,769	B2	9/2006	Wales et al.
7,112,201	B2	9/2006	Truckai et al.
7,112,214	B2	9/2006	Peterson et al.
RE39,358	E	10/2006	Goble
D530,339	S	10/2006	Hernandez et al.
7,114,642	B2	10/2006	Whitman
7,116,100	B1	10/2006	Mock et al.
7,118,020	B2	10/2006	Lee et al.
7,118,528	B1	10/2006	Piskun
7,118,563	B2	10/2006	Weckwerth et al.
7,118,582	B1	10/2006	Wang et al.
7,119,534	B2	10/2006	Butzmann
7,121,446	B2	10/2006	Arad et al.
7,121,773	B2	10/2006	Mikiya et al.
7,122,028	B2	10/2006	Looper et al.
7,125,403	B2	10/2006	Julian et al.
7,125,409	B2	10/2006	Truckai et al.
7,126,303	B2	10/2006	Farritor et al.
7,126,879	B2	10/2006	Snyder
7,128,253	B2	10/2006	Mastri et al.
7,128,254	B2	10/2006	Shelton, IV et al.
7,128,748	B2	10/2006	Mooradian et al.
7,131,445	B2	11/2006	Amoah
7,133,601	B2	11/2006	Phillips et al.
7,134,364	B2	11/2006	Kageler et al.
7,134,587	B2	11/2006	Schwemberger et al.
7,135,027	B2	11/2006	Delmotte
7,137,980	B2	11/2006	Buysse et al.
7,137,981	B2	11/2006	Long
7,139,016	B2	11/2006	Squilla et al.
7,140,527	B2	11/2006	Ehrenfels et al.
7,140,528	B2	11/2006	Shelton, IV
7,141,055	B2	11/2006	Abrams et al.
7,143,923	B2	12/2006	Shelton, IV et al.
7,143,924	B2	12/2006	Scirica et al.
7,143,925	B2	12/2006	Shelton, IV et al.
7,143,926	B2	12/2006	Shelton, IV et al.
7,146,191	B2	12/2006	Kerner et al.
7,147,138	B2	12/2006	Shelton, IV
7,147,139	B2	12/2006	Schwemberger et al.
7,147,140	B2	12/2006	Wukusick et al.
7,147,637	B2	12/2006	Goble
7,147,648	B2	12/2006	Lin
7,147,650	B2	12/2006	Lee
7,150,748	B2	12/2006	Ebbutt et al.
7,153,300	B2	12/2006	Goble
7,153,314	B2	12/2006	Laufer et al.
7,155,316	B2	12/2006	Sutherland et al.
7,156,846	B2	1/2007	Dycus et al.
7,156,863	B2	1/2007	Sonnenschein et al.
7,159,750	B2	1/2007	Racenet et al.
7,160,296	B2	1/2007	Pearson et al.
7,160,299	B2	1/2007	Baily
7,160,311	B2	1/2007	Blatter et al.
7,161,036	B2	1/2007	Oikawa et al.
7,161,580	B2	1/2007	Bailey et al.
7,162,758	B2	1/2007	Skinner
7,163,563	B2	1/2007	Schwartz et al.
7,166,117	B2	1/2007	Hellenkamp
7,166,133	B2	1/2007	Evans et al.
7,168,604	B2	1/2007	Milliman et al.
7,169,146	B2	1/2007	Truckai et al.
7,170,910	B2	1/2007	Chen et al.
7,171,279	B2	1/2007	Buckingham et al.
7,172,104	B2	2/2007	Scirica et al.
7,172,593	B2	2/2007	Trieu et al.
7,172,615	B2	2/2007	Morriss et al.
7,174,202	B2	2/2007	Bladen et al.
7,174,636	B2	2/2007	Lowe
7,177,533	B2	2/2007	McFarlin et al.
7,179,223	B2	2/2007	Motoki et al.
7,179,267	B2	2/2007	Nolan et al.
7,182,239	B1	2/2007	Myers
7,182,763	B2	2/2007	Nardella
7,183,737	B2	2/2007	Kitagawa
7,187,960	B2	3/2007	Abreu
7,188,758	B2	3/2007	Viola et al.
7,189,207	B2	3/2007	Viola
7,190,147	B2	3/2007	Gileff et al.
7,193,199	B2	3/2007	Jang
7,195,627	B2	3/2007	Amoah et al.
7,196,911	B2	3/2007	Takano et al.
D541,418	S	4/2007	Schechter et al.
7,197,965	B1	4/2007	Anderson
7,199,537	B2	4/2007	Okamura et al.
7,199,545	B2	4/2007	Oleynikov et al.
7,202,576	B1	4/2007	Dechene et al.
7,202,653	B2	4/2007	Pai
7,204,404	B2	4/2007	Nguyen et al.
7,204,835	B2	4/2007	Latterell et al.
7,205,959	B2	4/2007	Henriksson
7,206,626	B2	4/2007	Quaid, III
7,207,233	B2	4/2007	Wadge
7,207,471	B2	4/2007	Heinrich et al.
7,207,472	B2	4/2007	Wukusick et al.
7,207,556	B2	4/2007	Saitoh et al.
7,208,005	B2	4/2007	Frecker et al.
7,210,609	B2	5/2007	Leiboff et al.
7,211,081	B2	5/2007	Goble
7,211,084	B2	5/2007	Goble et al.
7,211,092	B2	5/2007	Hughett
7,211,979	B2	5/2007	Khatib et al.
7,213,736	B2	5/2007	Wales et al.
7,214,224	B2	5/2007	Goble
7,215,517	B2	5/2007	Takamatsu
7,217,285	B2	5/2007	Vargas et al.
7,220,260	B2	5/2007	Fleming et al.
7,220,272	B2	5/2007	Weadock
7,225,959	B2	6/2007	Patton et al.
7,225,963	B2	6/2007	Scirica
7,225,964	B2	6/2007	Mastri et al.
7,226,450	B2	6/2007	Athanasiou et al.
7,226,467	B2	6/2007	Lucatero et al.
7,228,505	B2	6/2007	Shimazu et al.
7,229,408	B2	6/2007	Douglas et al.
7,234,624	B2	6/2007	Gresham et al.
7,235,072	B2	6/2007	Sartor et al.
7,235,089	B1	6/2007	McGuckin, Jr.
7,235,302	B2	6/2007	Jing et al.
7,237,708	B1	7/2007	Guy et al.
7,238,195	B2	7/2007	Viola
7,238,901	B2	7/2007	Kim et al.
7,239,657	B1	7/2007	Gunnarsson
7,241,288	B2	7/2007	Braun
7,241,289	B2	7/2007	Braun

(56) **References Cited**

U.S. PATENT DOCUMENTS

7,246,734	B2	7/2007	Shelton, IV
7,247,161	B2	7/2007	Johnston et al.
7,249,267	B2	7/2007	Chapuis
7,252,641	B2	8/2007	Thompson et al.
7,252,660	B2	8/2007	Kunz
7,255,012	B2	8/2007	Hedtke
7,255,696	B2	8/2007	Goble et al.
7,256,695	B2	8/2007	Hamel et al.
7,258,262	B2	8/2007	Mastri et al.
7,258,546	B2	8/2007	Beier et al.
7,260,431	B2	8/2007	Libbus et al.
7,265,374	B2	9/2007	Lee et al.
7,267,677	B2	9/2007	Johnson et al.
7,267,679	B2	9/2007	McGuckin, Jr. et al.
7,272,002	B2	9/2007	Drapeau
7,273,483	B2	9/2007	Wiener et al.
7,273,488	B2	9/2007	Nakamura et al.
D552,623	S	10/2007	Vong et al.
7,275,674	B2	10/2007	Racenet et al.
7,276,044	B2	10/2007	Ferry et al.
7,276,068	B2	10/2007	Johnson et al.
7,278,562	B2	10/2007	Mastri et al.
7,278,563	B1	10/2007	Green
7,278,949	B2	10/2007	Bader
7,278,994	B2	10/2007	Goble
7,282,048	B2	10/2007	Goble et al.
7,283,096	B2	10/2007	Geisheimer et al.
7,286,850	B2	10/2007	Frielink et al.
7,287,682	B1	10/2007	Ezzat et al.
7,289,139	B2	10/2007	Amling et al.
7,293,685	B2	11/2007	Ehrenfels et al.
7,295,893	B2	11/2007	Sunaoshi
7,295,907	B2	11/2007	Lu et al.
7,296,722	B2	11/2007	Ivanko
7,296,724	B2	11/2007	Green et al.
7,297,149	B2	11/2007	Vitali et al.
7,300,373	B2	11/2007	Jinno et al.
7,300,431	B2	11/2007	Dubrovsky
7,300,450	B2	11/2007	Vleugels et al.
7,303,106	B2	12/2007	Milliman et al.
7,303,107	B2	12/2007	Milliman et al.
7,303,108	B2	12/2007	Shelton, IV
7,303,502	B2	12/2007	Thompson
7,303,556	B2	12/2007	Metzger
7,306,597	B2	12/2007	Manzo
7,308,998	B2	12/2007	Mastri et al.
7,311,238	B2	12/2007	Liu
7,311,709	B2	12/2007	Truckai et al.
7,313,430	B2	12/2007	Urquhart et al.
7,314,473	B2	1/2008	Jinno et al.
7,317,955	B2	1/2008	McGreevy
7,320,704	B2	1/2008	Lashinski et al.
7,322,859	B2	1/2008	Evans
7,322,975	B2	1/2008	Goble et al.
7,322,994	B2	1/2008	Nicholas et al.
7,324,572	B2	1/2008	Chang
7,326,203	B2	2/2008	Papineau et al.
7,326,213	B2	2/2008	Benderev et al.
7,328,828	B2	2/2008	Ortiz et al.
7,328,829	B2	2/2008	Arad et al.
7,330,004	B2	2/2008	DeJonge et al.
7,331,340	B2	2/2008	Barney
7,331,343	B2	2/2008	Schmidt et al.
7,331,403	B2	2/2008	Berry et al.
7,331,406	B2	2/2008	Wottreng, Jr. et al.
7,331,969	B1	2/2008	Inganas et al.
7,334,717	B2	2/2008	Rethy et al.
7,334,718	B2	2/2008	McAlister et al.
7,335,199	B2	2/2008	Goble et al.
7,335,401	B2	2/2008	Finke et al.
7,336,045	B2	2/2008	Clermonts
7,336,048	B2	2/2008	Lohr
7,336,183	B2	2/2008	Reddy et al.
7,336,184	B2	2/2008	Smith et al.
7,337,774	B2	3/2008	Webb
7,338,505	B2	3/2008	Belson
7,338,513	B2	3/2008	Lee et al.
7,341,554	B2	3/2008	Sekine et al.
7,341,555	B2	3/2008	Ootawara et al.
7,341,591	B2	3/2008	Grinberg
7,343,920	B2	3/2008	Toby et al.
7,344,532	B2	3/2008	Goble et al.
7,344,533	B2	3/2008	Pearson et al.
7,346,344	B2	3/2008	Fontaine
7,346,406	B2	3/2008	Brotto et al.
7,348,763	B1	3/2008	Reinhart et al.
7,348,875	B2	3/2008	Hughes et al.
RE40,237	E	4/2008	Bilotti et al.
7,351,258	B2	4/2008	Ricotta et al.
7,354,398	B2	4/2008	Kanazawa
7,354,440	B2	4/2008	Truckal et al.
7,354,447	B2	4/2008	Shelton, IV et al.
7,354,502	B2	4/2008	Polat et al.
7,357,287	B2	4/2008	Shelton, IV et al.
7,357,806	B2	4/2008	Rivera et al.
7,361,168	B2	4/2008	Makower et al.
7,361,195	B2	4/2008	Schwartz et al.
7,362,062	B2	4/2008	Schneider et al.
7,364,060	B2	4/2008	Milliman
7,364,061	B2	4/2008	Swayze et al.
7,367,485	B2	5/2008	Shelton, IV et al.
7,367,973	B2	5/2008	Manzo et al.
7,368,124	B2	5/2008	Chun et al.
7,371,210	B2	5/2008	Brock et al.
7,371,403	B2	5/2008	McCarthy et al.
7,375,493	B2	5/2008	Calhoon et al.
7,377,918	B2	5/2008	Amoah
7,377,928	B2	5/2008	Zubik et al.
7,378,817	B2	5/2008	Calhoon et al.
RE40,388	E	6/2008	Gines
D570,868	S	6/2008	Hosokawa et al.
7,380,695	B2	6/2008	Doll et al.
7,380,696	B2	6/2008	Shelton, IV et al.
7,384,403	B2	6/2008	Sherman
7,384,417	B2	6/2008	Cucin
7,386,365	B2	6/2008	Nixon
7,386,730	B2	6/2008	Uchikubo
7,388,217	B2	6/2008	Buschbeck et al.
7,388,484	B2	6/2008	Hsu
7,391,173	B2	6/2008	Schena
7,394,190	B2	7/2008	Huang
7,396,356	B2	7/2008	Mollenauer
7,397,364	B2	7/2008	Govari
7,398,707	B2	7/2008	Morley et al.
7,398,907	B2	7/2008	Racenet et al.
7,398,908	B2	7/2008	Holsten et al.
7,400,107	B2	7/2008	Schneider et al.
7,400,752	B2	7/2008	Zacharias
7,401,000	B2	7/2008	Nakamura
7,401,721	B2	7/2008	Holsten et al.
7,404,449	B2	7/2008	Bermingham et al.
7,404,508	B2	7/2008	Smith et al.
7,404,509	B2	7/2008	Ortiz et al.
7,404,822	B2	7/2008	Viart et al.
D575,793	S	8/2008	Ording
7,407,074	B2	8/2008	Ortiz et al.
7,407,075	B2	8/2008	Holsten et al.
7,407,076	B2	8/2008	Racenet et al.
7,407,077	B2	8/2008	Ortiz et al.
7,407,078	B2	8/2008	Shelton, IV et al.
7,408,310	B2	8/2008	Hong et al.
7,410,085	B2	8/2008	Wolf et al.
7,410,086	B2	8/2008	Ortiz et al.
7,410,483	B2	8/2008	Danitz et al.
7,413,563	B2	8/2008	Corcoran et al.
7,416,101	B2	8/2008	Shelton, IV et al.
7,418,078	B2	8/2008	Blanz et al.
RE40,514	E	9/2008	Mastri et al.
7,419,080	B2	9/2008	Smith et al.
7,419,081	B2	9/2008	Ehrenfels et al.
7,419,321	B2	9/2008	Tereschouk
7,419,495	B2	9/2008	Menn et al.
7,422,136	B1	9/2008	Marczyk
7,422,138	B2	9/2008	Bilotti et al.

(56) **References Cited**

U.S. PATENT DOCUMENTS

7,422,139	B2	9/2008	Shelton, IV et al.
7,424,965	B2	9/2008	Racenet et al.
7,427,607	B2	9/2008	Suzuki
D578,644	S	10/2008	Shumer et al.
7,430,772	B2	10/2008	Van Es
7,430,849	B1	10/2008	Coutts et al.
7,431,188	B1	10/2008	Marczyk
7,431,189	B2	10/2008	Shelton, IV et al.
7,431,230	B2	10/2008	McPherson et al.
7,431,694	B2	10/2008	Stefanchik et al.
7,431,730	B2	10/2008	Viola
7,434,715	B2	10/2008	Shelton, IV et al.
7,434,717	B2	10/2008	Shelton, IV et al.
7,435,249	B2	10/2008	Buysse et al.
7,438,209	B1	10/2008	Hess et al.
7,438,718	B2	10/2008	Milliman et al.
7,439,354	B2	10/2008	Lenges et al.
7,441,684	B2	10/2008	Shelton, IV et al.
7,441,685	B1	10/2008	Boudreaux
7,442,201	B2	10/2008	Pugsley et al.
7,443,547	B2	10/2008	Moreno et al.
D580,942	S	11/2008	Oshiro et al.
7,446,131	B1	11/2008	Liu et al.
7,448,525	B2	11/2008	Shelton, IV et al.
7,450,010	B1	11/2008	Gravelle et al.
7,450,991	B2	11/2008	Smith et al.
7,451,904	B2	11/2008	Shelton, IV
7,455,208	B2	11/2008	Wales et al.
7,455,676	B2	11/2008	Holsten et al.
7,455,682	B2	11/2008	Viola
7,455,687	B2	11/2008	Saunders et al.
D582,934	S	12/2008	Byeon
7,461,767	B2	12/2008	Viola et al.
7,462,187	B2	12/2008	Johnston et al.
7,464,845	B2	12/2008	Chou
7,464,846	B2	12/2008	Shelton, IV et al.
7,464,847	B2	12/2008	Viola et al.
7,464,848	B2	12/2008	Green et al.
7,464,849	B2	12/2008	Shelton, IV et al.
7,467,740	B2	12/2008	Shelton, IV et al.
7,467,849	B2	12/2008	Silverbrook et al.
7,472,814	B2	1/2009	Mastri et al.
7,472,815	B2	1/2009	Shelton, IV et al.
7,472,816	B2	1/2009	Holsten et al.
7,473,221	B2	1/2009	Ewers et al.
7,473,253	B2	1/2009	Dycus et al.
7,473,263	B2	1/2009	Johnston et al.
7,476,237	B2	1/2009	Taniguchi et al.
7,479,147	B2	1/2009	Honeycutt et al.
7,479,608	B2	1/2009	Smith
7,481,347	B2	1/2009	Roy
7,481,348	B2	1/2009	Marczyk
7,481,349	B2	1/2009	Holsten et al.
7,481,824	B2	1/2009	Boudreaux et al.
7,485,124	B2	2/2009	Kuhns et al.
7,485,133	B2	2/2009	Cannon et al.
7,485,142	B2	2/2009	Milo
7,487,899	B2	2/2009	Shelton, IV et al.
7,489,055	B2	2/2009	Jeong et al.
7,490,749	B2	2/2009	Schall et al.
7,491,232	B2	2/2009	Bolduc et al.
7,492,261	B2	2/2009	Cambre et al.
7,494,039	B2	2/2009	Racenet et al.
7,494,460	B2	2/2009	Haarstad et al.
7,494,499	B2	2/2009	Nagase et al.
7,494,501	B2	2/2009	Ahlberg et al.
7,497,137	B2	3/2009	Tellenbach et al.
7,500,979	B2	3/2009	Hueil et al.
7,501,198	B2	3/2009	Barlev et al.
7,503,474	B2	3/2009	Hillstead et al.
7,506,790	B2	3/2009	Shelton, IV
7,506,791	B2	3/2009	Omaits et al.
7,507,202	B2	3/2009	Schoellhorn
7,510,107	B2	3/2009	Timm et al.
7,510,534	B2	3/2009	Burdorff et al.
7,510,566	B2	3/2009	Jacobs et al.
7,513,407	B1	4/2009	Chang
7,513,408	B2	4/2009	Shelton, IV et al.
7,517,356	B2	4/2009	Heinrich
7,524,320	B2	4/2009	Tierney et al.
7,527,632	B2	5/2009	Houghton et al.
7,530,984	B2	5/2009	Sonnenschein et al.
7,530,985	B2	5/2009	Takemoto et al.
7,533,790	B1	5/2009	Knodel et al.
7,533,906	B2	5/2009	Luettgen et al.
7,534,259	B2	5/2009	Lashinski et al.
7,540,867	B2	6/2009	Jinno et al.
7,540,872	B2	6/2009	Schechter et al.
7,542,807	B2	6/2009	Bertolero et al.
7,543,730	B1	6/2009	Marczyk
7,544,197	B2	6/2009	Kelsch et al.
7,546,939	B2	6/2009	Adams et al.
7,546,940	B2	6/2009	Milliman et al.
7,547,287	B2	6/2009	Boecker et al.
7,547,312	B2	6/2009	Bauman et al.
7,549,563	B2	6/2009	Mather et al.
7,549,564	B2	6/2009	Boudreaux
7,549,998	B2	6/2009	Braun
7,552,854	B2	6/2009	Wixey et al.
7,553,173	B2	6/2009	Kowalick
7,553,275	B2	6/2009	Padget et al.
7,554,343	B2	6/2009	Bromfield
7,556,185	B2	7/2009	Viola
7,556,186	B2	7/2009	Milliman
7,556,647	B2	7/2009	Drews et al.
7,559,449	B2	7/2009	Viola
7,559,450	B2	7/2009	Wales et al.
7,559,452	B2	7/2009	Wales et al.
7,559,937	B2	7/2009	de la Torre et al.
7,561,637	B2	7/2009	Jonsson et al.
7,562,910	B2	7/2009	Kertesz et al.
7,563,269	B2	7/2009	Hashiguchi
7,563,862	B2	7/2009	Sieg et al.
7,565,993	B2	7/2009	Milliman et al.
7,566,300	B2	7/2009	Devierre et al.
7,567,045	B2	7/2009	Fristedt
7,568,603	B2	8/2009	Shelton, IV et al.
7,568,604	B2	8/2009	Ehrenfels et al.
7,568,619	B2	8/2009	Todd et al.
7,572,285	B2	8/2009	Frey et al.
7,572,298	B2	8/2009	Roller et al.
7,575,144	B2	8/2009	Ortiz et al.
7,578,825	B2	8/2009	Huebner
D600,712	S	9/2009	LaManna et al.
7,583,063	B2	9/2009	Dooley
7,584,880	B2	9/2009	Racenet et al.
7,586,289	B2	9/2009	Andruk et al.
7,588,174	B2	9/2009	Holsten et al.
7,588,175	B2	9/2009	Timm et al.
7,588,176	B2	9/2009	Timm et al.
7,588,177	B2	9/2009	Racenet
7,591,783	B2	9/2009	Boulais et al.
7,591,818	B2	9/2009	Bertolero et al.
7,593,766	B2	9/2009	Faber et al.
7,595,642	B2	9/2009	Doyle
7,597,229	B2	10/2009	Boudreaux et al.
7,597,230	B2	10/2009	Racenet et al.
7,597,693	B2	10/2009	Garrison
7,597,699	B2	10/2009	Rogers
7,598,972	B2	10/2009	Tomita
7,600,663	B2	10/2009	Green
7,604,118	B2	10/2009	Iio et al.
7,604,150	B2	10/2009	Boudreaux
7,604,151	B2	10/2009	Hess et al.
7,604,668	B2	10/2009	Farnsworth et al.
7,605,826	B2	10/2009	Sauer
7,607,557	B2	10/2009	Shelton, IV et al.
7,608,091	B2	10/2009	Goldfarb et al.
D604,325	S	11/2009	Ebeling et al.
7,611,038	B2	11/2009	Racenet et al.
7,611,474	B2	11/2009	Hibner et al.
7,615,003	B2	11/2009	Stefanchik et al.
7,615,006	B2	11/2009	Abe
7,615,067	B2	11/2009	Lee et al.

(56) **References Cited**

U.S. PATENT DOCUMENTS

7,617,961	B2	11/2009	Viola
7,618,427	B2	11/2009	Ortiz et al.
D605,201	S	12/2009	Lorenz et al.
D606,992	S	12/2009	Liu et al.
D607,010	S	12/2009	Kocmick
7,624,902	B2	12/2009	Marczyk et al.
7,624,903	B2	12/2009	Green et al.
7,625,370	B2	12/2009	Hart et al.
7,625,388	B2	12/2009	Boukhny et al.
7,625,662	B2	12/2009	Vaisnys et al.
7,630,841	B2	12/2009	Comisky et al.
7,631,793	B2	12/2009	Rethy et al.
7,631,794	B2	12/2009	Rethy et al.
7,635,074	B2	12/2009	Olson et al.
7,635,922	B2	12/2009	Becker
7,637,409	B2	12/2009	Marczyk
7,637,410	B2	12/2009	Marczyk
7,638,958	B2	12/2009	Philipp et al.
7,641,091	B2	1/2010	Olson et al.
7,641,092	B2	1/2010	Kruszynski et al.
7,641,093	B2	1/2010	Doll et al.
7,641,095	B2	1/2010	Viola
7,641,671	B2	1/2010	Crainich
7,644,016	B2	1/2010	Nycz et al.
7,644,484	B2	1/2010	Vereschagin
7,644,783	B2	1/2010	Roberts et al.
7,644,848	B2	1/2010	Swayze et al.
7,645,230	B2	1/2010	Mikkaichi et al.
7,648,055	B2	1/2010	Marczyk
7,648,457	B2	1/2010	Stefanchik et al.
7,648,519	B2	1/2010	Lee et al.
7,650,185	B2	1/2010	Maile et al.
7,651,017	B2	1/2010	Ortiz et al.
7,651,498	B2	1/2010	Shifrin et al.
7,654,431	B2	2/2010	Hueil et al.
7,655,003	B2	2/2010	Lorang et al.
7,655,004	B2	2/2010	Long
7,655,288	B2	2/2010	Bauman et al.
7,655,584	B2	2/2010	Biran et al.
7,656,131	B2	2/2010	Embrey et al.
7,658,311	B2	2/2010	Boudreaux
7,658,312	B2	2/2010	Vidal et al.
7,658,705	B2	2/2010	Melvin et al.
7,659,219	B2	2/2010	Biran et al.
7,661,448	B2	2/2010	Kim et al.
7,662,161	B2	2/2010	Briganti et al.
7,665,646	B2	2/2010	Prommersberger
7,665,647	B2	2/2010	Shelton, IV et al.
7,666,195	B2	2/2010	Kelleher et al.
7,669,746	B2	3/2010	Shelton, IV
7,669,747	B2	3/2010	Weisenburgh, II et al.
7,670,334	B2	3/2010	Hueil et al.
7,670,337	B2	3/2010	Young
7,673,780	B2	3/2010	Shelton, IV et al.
7,673,781	B2	3/2010	Swayze et al.
7,673,782	B2	3/2010	Hess et al.
7,673,783	B2	3/2010	Morgan et al.
7,674,253	B2	3/2010	Fisher et al.
7,674,255	B2	3/2010	Braun
7,674,263	B2	3/2010	Ryan
7,674,270	B2	3/2010	Layer
7,678,121	B1	3/2010	Knodel
7,682,307	B2	3/2010	Danitz et al.
7,682,367	B2	3/2010	Shah et al.
7,682,686	B2	3/2010	Curro et al.
7,686,201	B2	3/2010	Csiky
7,686,804	B2	3/2010	Johnson et al.
7,686,826	B2	3/2010	Lee et al.
7,688,028	B2	3/2010	Phillips et al.
7,690,547	B2	4/2010	Racenet et al.
7,691,098	B2	4/2010	Wallace et al.
7,691,103	B2	4/2010	Fernandez et al.
7,691,106	B2	4/2010	Schenberger et al.
7,694,864	B2	4/2010	Okada et al.
7,694,865	B2	4/2010	Scirica
7,695,485	B2	4/2010	Whitman et al.
7,695,493	B2	4/2010	Saadat et al.
7,699,204	B2	4/2010	Viola
7,699,835	B2	4/2010	Lee et al.
7,699,844	B2	4/2010	Utley et al.
7,699,846	B2	4/2010	Ryan
7,699,856	B2	4/2010	Van Wyk et al.
7,699,859	B2	4/2010	Bombard et al.
7,699,860	B2	4/2010	Huitema et al.
7,699,868	B2	4/2010	Frank et al.
7,703,653	B2	4/2010	Shah et al.
7,705,559	B2	4/2010	Powell et al.
7,706,853	B2	4/2010	Hacker et al.
7,708,180	B2	5/2010	Murray et al.
7,708,181	B2	5/2010	Cole et al.
7,708,182	B2	5/2010	Viola
7,708,758	B2	5/2010	Lee et al.
7,708,768	B2	5/2010	Danek et al.
7,709,136	B2	5/2010	Touchton et al.
7,712,182	B2	5/2010	Zeiler et al.
7,713,190	B2	5/2010	Brock et al.
7,713,542	B2	5/2010	Xu et al.
7,714,239	B2	5/2010	Smith
7,714,334	B2	5/2010	Lin
7,717,312	B2	5/2010	Beetel
7,717,313	B2	5/2010	Criscuolo et al.
7,717,846	B2	5/2010	Zirps et al.
7,717,873	B2	5/2010	Swick
7,717,915	B2	5/2010	Miyazawa
7,717,926	B2	5/2010	Whitfield et al.
7,718,180	B2	5/2010	Karp
7,718,556	B2	5/2010	Matsuda et al.
7,721,930	B2	5/2010	McKenna et al.
7,721,931	B2	5/2010	Shelton, IV et al.
7,721,932	B2	5/2010	Cole et al.
7,721,933	B2	5/2010	Ehrenfels et al.
7,721,934	B2	5/2010	Shelton, IV et al.
7,721,936	B2	5/2010	Shalton, IV et al.
7,722,527	B2	5/2010	Bouchier et al.
7,722,607	B2	5/2010	Dumbauld et al.
7,722,610	B2	5/2010	Viola et al.
7,725,214	B2	5/2010	Diolaiti
7,726,171	B2	6/2010	Langlotz et al.
7,726,537	B2	6/2010	Olson et al.
7,726,538	B2	6/2010	Holsten et al.
7,726,539	B2	6/2010	Holsten et al.
7,727,954	B2	6/2010	McKay
7,728,553	B2	6/2010	Carrier et al.
7,729,742	B2	6/2010	Govari
7,731,072	B2	6/2010	Timm et al.
7,731,073	B2	6/2010	Wixey et al.
7,731,724	B2	6/2010	Huitema et al.
7,735,703	B2	6/2010	Morgan et al.
7,735,704	B2	6/2010	Bilotti
7,736,254	B2	6/2010	Schena
7,736,306	B2	6/2010	Brustad et al.
7,736,356	B2	6/2010	Cooper et al.
7,736,374	B2	6/2010	Vaughan et al.
7,738,971	B2	6/2010	Swayze et al.
7,740,159	B2	6/2010	Shelton, IV et al.
7,742,036	B2	6/2010	Grant et al.
7,743,960	B2	6/2010	Whitman et al.
7,744,624	B2	6/2010	Bettuchi
7,744,627	B2	6/2010	Orban, III et al.
7,744,628	B2	6/2010	Viola
7,747,146	B2	6/2010	Milano et al.
7,748,587	B2	7/2010	Haramiishi et al.
7,748,632	B2	7/2010	Coleman et al.
7,749,204	B2	7/2010	Dhanaraj et al.
7,749,240	B2	7/2010	Takahashi et al.
7,751,870	B2	7/2010	Whitman
7,753,245	B2	7/2010	Boudreaux et al.
7,753,246	B2	7/2010	Scirica
7,753,904	B2	7/2010	Shelton, IV et al.
7,757,924	B2	7/2010	Gerbi et al.
7,758,594	B2	7/2010	Lamson et al.
7,758,612	B2	7/2010	Shipp
7,758,613	B2	7/2010	Whitman
7,762,462	B2	7/2010	Gelbman

(56) **References Cited**

U.S. PATENT DOCUMENTS

7,762,998	B2	7/2010	Birk et al.
D622,286	S	8/2010	Umezawa
7,766,207	B2	8/2010	Mather et al.
7,766,209	B2	8/2010	Baxter, III et al.
7,766,210	B2	8/2010	Shelton, IV et al.
7,766,821	B2	8/2010	Brunnen et al.
7,766,894	B2	8/2010	Weitzner et al.
7,770,658	B2	8/2010	Ito et al.
7,770,773	B2	8/2010	Whitman et al.
7,770,774	B2	8/2010	Mastri et al.
7,770,775	B2	8/2010	Shelton, IV et al.
7,770,776	B2	8/2010	Chen et al.
7,771,396	B2	8/2010	Stefanchik et al.
7,772,720	B2	8/2010	McGee et al.
7,772,725	B2	8/2010	Siman-Tov
7,775,972	B2	8/2010	Brock et al.
7,776,037	B2	8/2010	Odom
7,776,060	B2	8/2010	Mooradian et al.
7,776,065	B2	8/2010	Griffiths et al.
7,778,004	B2	8/2010	Nerheim et al.
7,779,614	B1	8/2010	McGonagle et al.
7,779,737	B2	8/2010	Newman, Jr. et al.
7,780,054	B2	8/2010	Wales
7,780,055	B2	8/2010	Scirica et al.
7,780,309	B2	8/2010	McMillan et al.
7,780,651	B2	8/2010	Madhani et al.
7,780,663	B2	8/2010	Yates et al.
7,780,685	B2	8/2010	Hunt et al.
7,782,382	B2	8/2010	Fujimura
7,784,662	B2	8/2010	Wales et al.
7,784,663	B2	8/2010	Shelton, IV
7,787,256	B2	8/2010	Chan et al.
7,789,283	B2	9/2010	Shah
7,789,875	B2	9/2010	Brock et al.
7,789,883	B2	9/2010	Takashino et al.
7,789,889	B2	9/2010	Zubik et al.
7,793,812	B2	9/2010	Moore et al.
7,794,475	B2	9/2010	Hess et al.
7,798,386	B2	9/2010	Schall et al.
7,799,039	B2	9/2010	Shelton, IV et al.
7,799,044	B2	9/2010	Johnston et al.
7,799,965	B2	9/2010	Patel et al.
7,803,151	B2	9/2010	Whitman
7,806,871	B2	10/2010	Li et al.
7,806,891	B2	10/2010	Nowlin et al.
7,810,690	B2	10/2010	Bilotti et al.
7,810,691	B2	10/2010	Boyden et al.
7,810,692	B2	10/2010	Hall et al.
7,810,693	B2	10/2010	Broehl et al.
7,811,275	B2	10/2010	Birk et al.
7,814,816	B2	10/2010	Alberti et al.
7,815,092	B2	10/2010	Whitman et al.
7,815,565	B2	10/2010	Stefanchik et al.
7,815,662	B2	10/2010	Spivey et al.
7,819,296	B2	10/2010	Hueil et al.
7,819,297	B2	10/2010	Doll et al.
7,819,298	B2	10/2010	Hall et al.
7,819,299	B2	10/2010	Shelton, IV et al.
7,819,799	B2	10/2010	Merril et al.
7,819,884	B2	10/2010	Lee et al.
7,819,885	B2	10/2010	Cooper
7,819,886	B2	10/2010	Whitfield et al.
7,819,894	B2	10/2010	Mitsuishi et al.
7,823,076	B2	10/2010	Borovsky et al.
7,823,592	B2	11/2010	Bettuchi et al.
7,823,760	B2	11/2010	Zemlok et al.
7,824,401	B2	11/2010	Manzo et al.
7,824,422	B2	11/2010	Benchetrit
7,824,426	B2	11/2010	Racenet et al.
7,828,189	B2	11/2010	Holsten et al.
7,828,794	B2	11/2010	Sartor
7,828,808	B2	11/2010	Hinman et al.
7,829,416	B2	11/2010	Kudou et al.
7,831,292	B2	11/2010	Quaid et al.
7,832,408	B2	11/2010	Shelton, IV et al.
7,832,611	B2	11/2010	Boyden et al.
7,832,612	B2	11/2010	Baxter, III et al.
7,833,234	B2	11/2010	Bailly et al.
7,835,823	B2	11/2010	Sillman et al.
7,836,400	B2	11/2010	May et al.
7,837,079	B2	11/2010	Holsten et al.
7,837,080	B2	11/2010	Schwemberger
7,837,081	B2	11/2010	Holsten et al.
7,837,425	B2	11/2010	Saeki et al.
7,837,685	B2	11/2010	Weinberg et al.
7,837,687	B2	11/2010	Harp
7,837,694	B2	11/2010	Tethrake et al.
7,838,789	B2	11/2010	Stoffers et al.
7,839,109	B2	11/2010	Carmen, Jr. et al.
7,840,253	B2	11/2010	Tremblay et al.
7,841,503	B2	11/2010	Sonnenschein et al.
7,842,025	B2	11/2010	Coleman et al.
7,842,028	B2	11/2010	Lee
7,843,158	B2	11/2010	Prisco
7,845,533	B2	12/2010	Marczyk et al.
7,845,534	B2	12/2010	Viola et al.
7,845,535	B2	12/2010	Scircia
7,845,536	B2	12/2010	Viola et al.
7,845,537	B2	12/2010	Shelton, IV et al.
7,845,538	B2	12/2010	Whitman
7,845,912	B2	12/2010	Sung et al.
7,846,085	B2	12/2010	Silverman et al.
7,846,149	B2	12/2010	Jankowski
7,846,161	B2	12/2010	Dumbauld et al.
7,848,066	B2	12/2010	Yanagishima
7,850,623	B2	12/2010	Griffin et al.
7,850,642	B2	12/2010	Moll et al.
7,850,982	B2	12/2010	Stopek et al.
7,853,813	B2	12/2010	Lee
7,854,735	B2	12/2010	Houser et al.
7,854,736	B2	12/2010	Ryan
7,857,183	B2	12/2010	Shelton, IV
7,857,184	B2	12/2010	Viola
7,857,185	B2	12/2010	Swayze et al.
7,857,186	B2	12/2010	Baxter, III et al.
7,857,813	B2	12/2010	Schmitz et al.
7,861,906	B2	1/2011	Doll et al.
7,862,502	B2	1/2011	Pool et al.
7,862,546	B2	1/2011	Conlon et al.
7,862,579	B2	1/2011	Ortiz et al.
7,866,525	B2	1/2011	Scirica
7,866,527	B2	1/2011	Hall et al.
7,866,528	B2	1/2011	Olson et al.
7,870,989	B2	1/2011	Viola et al.
7,871,418	B2	1/2011	Thompson et al.
7,871,440	B2	1/2011	Schwartz et al.
7,875,055	B2	1/2011	Cichocki, Jr.
7,877,869	B2	2/2011	Mehdizadeh et al.
7,879,063	B2	2/2011	Khosravi
7,879,070	B2	2/2011	Ortiz et al.
7,879,367	B2	2/2011	Heublein et al.
7,883,461	B2	2/2011	Albrecht et al.
7,883,465	B2	2/2011	Donofrio et al.
7,883,540	B2	2/2011	Niwa et al.
7,886,951	B2	2/2011	Hessler
7,886,952	B2	2/2011	Scirica et al.
7,887,530	B2	2/2011	Zemlok et al.
7,887,535	B2	2/2011	Lands et al.
7,887,536	B2	2/2011	Johnson et al.
7,887,563	B2	2/2011	Cummins
7,887,755	B2	2/2011	Mingerink et al.
7,891,531	B1	2/2011	Ward
7,891,532	B2	2/2011	Mastri et al.
7,892,200	B2	2/2011	Birk et al.
7,892,245	B2	2/2011	Liddicoat et al.
7,893,586	B2	2/2011	West et al.
7,896,214	B2	3/2011	Farascioni
7,896,215	B2	3/2011	Adams et al.
7,896,671	B2	3/2011	Kim et al.
7,896,869	B2	3/2011	DiSilvestro et al.
7,896,877	B2	3/2011	Hall et al.
7,896,895	B2	3/2011	Boudreaux et al.
7,896,897	B2	3/2011	Gresham et al.
7,896,900	B2	3/2011	Frank et al.

(56) **References Cited**

U.S. PATENT DOCUMENTS

7,898,198	B2	3/2011	Murphree
7,900,805	B2	3/2011	Shelton, IV et al.
7,900,806	B2	3/2011	Chen et al.
7,901,381	B2	3/2011	Birk et al.
7,905,380	B2	3/2011	Shelton, IV et al.
7,905,381	B2	3/2011	Baxter, III et al.
7,905,881	B2	3/2011	Masuda et al.
7,905,889	B2	3/2011	Catanese, III et al.
7,905,890	B2	3/2011	Whitfield et al.
7,905,902	B2	3/2011	Huitema et al.
7,909,039	B2	3/2011	Hur
7,909,191	B2	3/2011	Baker et al.
7,909,220	B2	3/2011	Viola
7,909,221	B2	3/2011	Viola et al.
7,909,224	B2	3/2011	Prommersberger
7,913,891	B2	3/2011	Doll et al.
7,913,893	B2	3/2011	Mastri et al.
7,914,521	B2	3/2011	Wang et al.
7,914,543	B2	3/2011	Roth et al.
7,914,551	B2	3/2011	Ortiz et al.
7,918,230	B2	4/2011	Whitman et al.
7,918,376	B1	4/2011	Knodel et al.
7,918,377	B2	4/2011	Measamer et al.
7,918,845	B2	4/2011	Saadat et al.
7,918,848	B2	4/2011	Lau et al.
7,918,861	B2	4/2011	Brock et al.
7,918,867	B2	4/2011	Dana et al.
7,922,061	B2	4/2011	Shelton, IV et al.
7,922,063	B2	4/2011	Zemlok et al.
7,922,743	B2	4/2011	Heinrich et al.
7,923,144	B2	4/2011	Kohn et al.
7,926,691	B2	4/2011	Viola et al.
7,926,692	B2	4/2011	Racenet et al.
7,927,328	B2	4/2011	Orszulak et al.
7,928,281	B2	4/2011	Augustine
7,930,040	B1	4/2011	Kelsch et al.
7,930,065	B2	4/2011	Larkin et al.
7,931,660	B2	4/2011	Aranyi et al.
7,931,695	B2	4/2011	Ringeisen
7,931,877	B2	4/2011	Steffens et al.
7,934,630	B2	5/2011	Shelton, IV et al.
7,934,631	B2	5/2011	Balbierz et al.
7,934,896	B2	5/2011	Schnier
7,935,130	B2	5/2011	Williams
7,935,773	B2	5/2011	Hadba et al.
7,936,142	B2	5/2011	Otsuka et al.
7,938,307	B2	5/2011	Bettuchi
7,939,152	B2	5/2011	Haskin et al.
7,941,865	B2	5/2011	Seman, Jr. et al.
7,942,300	B2	5/2011	Rethy et al.
7,942,303	B2	5/2011	Shah
7,942,890	B2	5/2011	D'Agostino et al.
7,944,175	B2	5/2011	Mori et al.
7,945,792	B2	5/2011	Cherpantier
7,945,798	B2	5/2011	Carlson et al.
7,946,453	B2	5/2011	Voegele et al.
7,947,011	B2	5/2011	Birk et al.
7,948,381	B2	5/2011	Lindsay et al.
7,950,560	B2	5/2011	Zemlok et al.
7,950,561	B2	5/2011	Aranyi
7,950,562	B2	5/2011	Beardsley et al.
7,951,071	B2	5/2011	Whitman et al.
7,951,166	B2	5/2011	Orban, III et al.
7,952,464	B2	5/2011	Nikitin et al.
7,954,682	B2	6/2011	Giordano et al.
7,954,684	B2	6/2011	Boudreaux
7,954,685	B2	6/2011	Viola
7,954,686	B2	6/2011	Baxter, III et al.
7,954,687	B2	6/2011	Zemlok et al.
7,954,688	B2	6/2011	Argentine et al.
7,955,253	B2	6/2011	Ewers et al.
7,955,257	B2	6/2011	Frasier et al.
7,955,322	B2	6/2011	Devengenzo et al.
7,955,327	B2	6/2011	Sartor et al.
7,955,380	B2	6/2011	Chu et al.
7,959,050	B2	6/2011	Smith et al.
7,959,051	B2	6/2011	Smith et al.
7,959,052	B2	6/2011	Sonnenschein et al.
7,963,432	B2	6/2011	Knodel et al.
7,963,433	B2	6/2011	Whitman et al.
7,963,913	B2	6/2011	Devengenzo et al.
7,963,963	B2	6/2011	Francischelli et al.
7,963,964	B2	6/2011	Santilli et al.
7,964,206	B2	6/2011	Suokas et al.
7,966,236	B2	6/2011	Noriega et al.
7,966,269	B2	6/2011	Bauer et al.
7,966,799	B2	6/2011	Morgan et al.
7,967,178	B2	6/2011	Scirica et al.
7,967,179	B2	6/2011	Olson et al.
7,967,180	B2	6/2011	Scirica
7,967,181	B2	6/2011	Viola et al.
7,967,791	B2	6/2011	Franer et al.
7,967,839	B2	6/2011	Flock et al.
7,972,298	B2	7/2011	Wallace et al.
7,972,315	B2	7/2011	Birk et al.
7,976,213	B2	7/2011	Bertolotti et al.
7,976,508	B2	7/2011	Hoag
7,976,563	B2	7/2011	Summerer
7,979,137	B2	7/2011	Tracey et al.
7,980,443	B2	7/2011	Scheib et al.
7,981,025	B2	7/2011	Pool et al.
7,981,102	B2	7/2011	Patel et al.
7,981,132	B2	7/2011	Dubrul et al.
7,987,405	B2	7/2011	Turner et al.
7,988,015	B2	8/2011	Mason, II et al.
7,988,026	B2	8/2011	Knodel et al.
7,988,027	B2	8/2011	Olson et al.
7,988,028	B2	8/2011	Farascioni et al.
7,988,779	B2	8/2011	Disalvo et al.
7,992,757	B2	8/2011	Wheeler et al.
7,993,360	B2	8/2011	Hacker et al.
7,994,670	B2	8/2011	Ji
7,997,054	B2	8/2011	Bertsch et al.
7,997,468	B2	8/2011	Farascioni
7,997,469	B2	8/2011	Olson et al.
8,002,696	B2	8/2011	Suzuki
8,002,784	B2	8/2011	Jinno et al.
8,002,785	B2	8/2011	Weiss et al.
8,002,795	B2	8/2011	Beetel
8,006,365	B2	8/2011	Levin et al.
8,006,885	B2	8/2011	Marczyk
8,006,889	B2	8/2011	Adams et al.
8,007,370	B2	8/2011	Hirsch et al.
8,007,465	B2	8/2011	Birk et al.
8,007,479	B2	8/2011	Birk et al.
8,007,511	B2	8/2011	Brock et al.
8,007,513	B2	8/2011	Nalagatla et al.
8,008,598	B2	8/2011	Whitman et al.
8,010,180	B2	8/2011	Quaid et al.
8,011,550	B2	9/2011	Aranyi et al.
8,011,551	B2	9/2011	Marczyk et al.
8,011,553	B2	9/2011	Mastri et al.
8,011,555	B2	9/2011	Tarinelli et al.
8,012,170	B2	9/2011	Whitman et al.
8,016,176	B2	9/2011	Kasvikis et al.
8,016,177	B2	9/2011	Bettuchi et al.
8,016,178	B2	9/2011	Olson et al.
8,016,849	B2	9/2011	Wenchell
8,016,855	B2	9/2011	Whitman et al.
8,016,858	B2	9/2011	Whitman
8,016,881	B2	9/2011	Furst
8,020,741	B2	9/2011	Cole et al.
8,020,742	B2	9/2011	Marczyk
8,020,743	B2	9/2011	Shelton, IV
8,021,375	B2	9/2011	Aldrich et al.
8,025,199	B2	9/2011	Whitman et al.
8,025,896	B2	9/2011	Malaviya et al.
8,028,835	B2	10/2011	Yasuda et al.
8,028,882	B2	10/2011	Viola
8,028,883	B2	10/2011	Stopek
8,028,884	B2	10/2011	Sniffin et al.
8,028,885	B2	10/2011	Smith et al.
8,029,510	B2	10/2011	Hoegerle
8,031,069	B2	10/2011	Cohn et al.

(56) **References Cited**

U.S. PATENT DOCUMENTS

8,033,438	B2	10/2011	Scirica
8,033,439	B2	10/2011	Racenet et al.
8,033,440	B2	10/2011	Wenchell et al.
8,033,442	B2	10/2011	Racenet et al.
8,034,077	B2	10/2011	Smith et al.
8,034,337	B2	10/2011	Simard
8,034,363	B2	10/2011	Li et al.
8,035,487	B2	10/2011	Malackowski
8,037,591	B2	10/2011	Spivey et al.
8,038,044	B2	10/2011	Viola
8,038,045	B2	10/2011	Bettuchi et al.
8,038,046	B2	10/2011	Smith et al.
8,038,686	B2	10/2011	Huitema et al.
8,043,207	B2	10/2011	Adams
8,043,328	B2	10/2011	Hahnen et al.
8,044,536	B2	10/2011	Nguyen et al.
8,044,604	B2	10/2011	Hagino et al.
8,047,236	B2	11/2011	Perry
8,048,503	B2	11/2011	Farnsworth et al.
8,052,636	B2	11/2011	Moll et al.
8,052,697	B2	11/2011	Phillips
8,056,787	B2	11/2011	Boudreaux et al.
8,056,788	B2	11/2011	Mastri et al.
8,056,789	B1	11/2011	White et al.
8,057,508	B2	11/2011	Shelton, IV
8,058,771	B2	11/2011	Giordano et al.
8,060,250	B2	11/2011	Reiland et al.
8,061,014	B2	11/2011	Smith et al.
8,061,576	B2	11/2011	Cappola
8,062,236	B2	11/2011	Soltz
8,062,306	B2	11/2011	Nobis et al.
8,062,330	B2	11/2011	Prommersberger et al.
8,063,619	B2	11/2011	Zhu et al.
8,066,158	B2	11/2011	Vogel et al.
8,066,166	B2	11/2011	Demmy et al.
8,066,167	B2	11/2011	Measamer et al.
8,066,168	B2	11/2011	Vidal et al.
8,066,720	B2	11/2011	Knodel et al.
D650,074	S	12/2011	Hunt et al.
D650,789	S	12/2011	Arnold
8,070,033	B2	12/2011	Milliman et al.
8,070,034	B1	12/2011	Knodel
8,070,035	B2	12/2011	Holsten et al.
8,070,743	B2	12/2011	Kagan et al.
8,074,858	B2	12/2011	Marczyk
8,074,859	B2	12/2011	Kostrzewski
8,074,861	B2	12/2011	Ehrenfels et al.
8,075,476	B2	12/2011	Vargas
8,075,571	B2	12/2011	Vitali et al.
8,079,950	B2	12/2011	Stern et al.
8,079,989	B2	12/2011	Birk et al.
8,080,004	B2	12/2011	Downey et al.
8,083,118	B2	12/2011	Milliman et al.
8,083,119	B2	12/2011	Prommersberger
8,083,120	B2	12/2011	Shelton, IV et al.
8,084,001	B2	12/2011	Burns et al.
8,084,969	B2	12/2011	David et al.
8,085,013	B2	12/2011	Wei et al.
8,087,562	B1	1/2012	Manoux et al.
8,087,563	B2	1/2012	Milliman et al.
8,089,509	B2	1/2012	Chatenever et al.
8,091,753	B2	1/2012	Viola
8,091,756	B2	1/2012	Viola
8,092,443	B2	1/2012	Bischoff
8,092,932	B2	1/2012	Phillips et al.
8,093,572	B2	1/2012	Kuduvalli
8,096,458	B2	1/2012	Hessler
8,096,459	B2	1/2012	Ortiz et al.
8,097,017	B2	1/2012	Viola
8,100,310	B2	1/2012	Zemlok
8,100,824	B2	1/2012	Hegeman et al.
8,100,872	B2	1/2012	Patel
8,102,138	B2	1/2012	Sekine et al.
8,102,278	B2	1/2012	Deck et al.
8,105,320	B2	1/2012	Manzo
8,105,350	B2	1/2012	Lee et al.
8,107,925	B2	1/2012	Natsuno et al.
8,108,033	B2	1/2012	Drew et al.
8,108,072	B2	1/2012	Zhao et al.
8,109,426	B2	2/2012	Milliman et al.
8,110,208	B1	2/2012	Hen
8,113,405	B2	2/2012	Milliman
8,113,407	B2	2/2012	Holsten et al.
8,113,408	B2	2/2012	Wenchell et al.
8,113,410	B2	2/2012	Hall et al.
8,114,017	B2	2/2012	Bacher
8,114,100	B2	2/2012	Smith et al.
8,114,345	B2	2/2012	Dlugos, Jr. et al.
8,118,206	B2	2/2012	Zand et al.
8,118,207	B2	2/2012	Racenet et al.
8,120,301	B2	2/2012	Goldberg et al.
8,122,128	B2	2/2012	Burke, II et al.
8,123,103	B2	2/2012	Milliman
8,123,523	B2	2/2012	Carron et al.
8,123,766	B2	2/2012	Bauman et al.
8,123,767	B2	2/2012	Bauman et al.
8,125,168	B2	2/2012	Johnson et al.
8,127,975	B2	3/2012	Olson et al.
8,127,976	B2	3/2012	Scirica et al.
8,128,624	B2	3/2012	Couture et al.
8,128,643	B2	3/2012	Aranyi et al.
8,128,645	B2	3/2012	Sonnenschein et al.
8,128,662	B2	3/2012	Altarac et al.
8,132,703	B2	3/2012	Milliman et al.
8,132,705	B2	3/2012	Viola et al.
8,132,706	B2	3/2012	Marczyk et al.
8,133,500	B2	3/2012	Ringeisen et al.
8,134,306	B2	3/2012	Drader et al.
8,136,711	B2	3/2012	Beardsley et al.
8,136,712	B2	3/2012	Zingman
8,136,713	B2	3/2012	Hathaway et al.
8,137,339	B2	3/2012	Jinno et al.
8,140,417	B2	3/2012	Shibata
8,141,762	B2	3/2012	Bedi et al.
8,141,763	B2	3/2012	Milliman
8,142,200	B2	3/2012	Crunkilton et al.
8,142,425	B2	3/2012	Eggers
8,142,461	B2	3/2012	Houser et al.
8,142,515	B2	3/2012	Therin et al.
8,143,520	B2	3/2012	Cutler
8,146,790	B2	4/2012	Milliman
8,147,421	B2	4/2012	Farquhar et al.
8,147,456	B2	4/2012	Fisher et al.
8,147,485	B2	4/2012	Wham et al.
8,152,041	B2	4/2012	Kostrzewski
8,152,756	B2	4/2012	Webster et al.
8,154,239	B2	4/2012	Katsuki et al.
8,157,145	B2	4/2012	Shelton, IV et al.
8,157,148	B2	4/2012	Scirica
8,157,151	B2	4/2012	Ingmanson et al.
8,157,152	B2	4/2012	Holsten et al.
8,157,153	B2	4/2012	Shelton, IV et al.
8,157,793	B2	4/2012	Omori et al.
8,157,834	B2	4/2012	Conlon
8,161,977	B2	4/2012	Shelton, IV et al.
8,162,138	B2	4/2012	Bettenhausen et al.
8,162,197	B2	4/2012	Mastri et al.
8,162,668	B2	4/2012	Toly
8,162,933	B2	4/2012	Francischelli et al.
8,162,965	B2	4/2012	Reschke et al.
8,167,185	B2	5/2012	Shelton, IV et al.
8,167,622	B2	5/2012	Zhou
8,167,895	B2	5/2012	D'Agostino et al.
8,167,898	B1	5/2012	Schaller et al.
8,170,241	B2	5/2012	Roe et al.
8,172,004	B2	5/2012	Ho
8,172,120	B2	5/2012	Boyden et al.
8,172,122	B2	5/2012	Kasvikis et al.
8,172,124	B2	5/2012	Shelton, IV et al.
8,177,776	B2	5/2012	Humayun et al.
8,177,797	B2	5/2012	Shimoji et al.
8,179,705	B2	5/2012	Chapuis
8,180,458	B2	5/2012	Kane et al.
8,181,839	B2	5/2012	Beetel

(56) **References Cited**

U.S. PATENT DOCUMENTS

8,181,840 B2 5/2012 Milliman
8,182,422 B2 5/2012 Bayer et al.
8,182,444 B2 5/2012 Uber, III et al.
8,183,807 B2 5/2012 Tsai et al.
8,186,555 B2 5/2012 Shelton, IV et al.
8,186,556 B2 5/2012 Viola
8,186,558 B2 5/2012 Sapienza
8,186,560 B2 5/2012 Hess et al.
8,190,238 B2 5/2012 Moll et al.
8,191,752 B2 6/2012 Scirica
8,192,350 B2 6/2012 Ortiz et al.
8,192,460 B2 6/2012 Orban, III et al.
8,192,651 B2 6/2012 Young et al.
8,193,129 B2 6/2012 Tagawa et al.
8,196,795 B2 6/2012 Moore et al.
8,196,796 B2 6/2012 Shelton, IV et al.
8,197,501 B2 6/2012 Shadeck et al.
8,197,502 B2 6/2012 Smith et al.
8,197,837 B2 6/2012 Jamiolkowski et al.
8,201,720 B2 6/2012 Hessler
8,201,721 B2 6/2012 Zemlok et al.
8,202,549 B2 6/2012 Stucky et al.
8,205,779 B2 6/2012 Ma et al.
8,205,780 B2 6/2012 Sorrentino et al.
8,205,781 B2 6/2012 Baxter, III et al.
8,207,863 B2 6/2012 Neubauer et al.
8,210,411 B2 7/2012 Yates et al.
8,210,414 B2 7/2012 Bettuchi et al.
8,210,415 B2 7/2012 Ward
8,210,416 B2 7/2012 Milliman et al.
8,210,721 B2 7/2012 Chen et al.
8,211,125 B2 7/2012 Spivey
8,214,019 B2 7/2012 Govari et al.
8,215,531 B2 7/2012 Shelton, IV et al.
8,215,532 B2 7/2012 Marczyk
8,215,533 B2 7/2012 Viola et al.
8,220,468 B2 7/2012 Cooper et al.
8,220,688 B2 7/2012 Laurent et al.
8,220,690 B2 7/2012 Hess et al.
8,221,402 B2 7/2012 Francischelli et al.
8,221,424 B2 7/2012 Cha
8,221,433 B2 7/2012 Lozier et al.
8,225,799 B2 7/2012 Bettuchi
8,225,979 B2 7/2012 Farascioni et al.
8,226,553 B2 7/2012 Shelton, IV et al.
8,226,635 B2 7/2012 Petrie et al.
8,226,675 B2 7/2012 Houser et al.
8,226,715 B2 7/2012 Hwang et al.
8,227,946 B2 7/2012 Kim
8,228,020 B2 7/2012 Shin et al.
8,228,048 B2 7/2012 Spencer
8,229,549 B2 7/2012 Whitman et al.
8,230,235 B2 7/2012 Goodman et al.
8,231,040 B2 7/2012 Zemlok et al.
8,231,042 B2 7/2012 Hessler et al.
8,231,043 B2 7/2012 Tarinelli et al.
8,235,272 B2 8/2012 Nicholas et al.
8,235,274 B2 8/2012 Cappola
8,236,010 B2 8/2012 Ortiz et al.
8,236,011 B2 8/2012 Harris et al.
8,236,020 B2 8/2012 Smith et al.
8,237,388 B2 8/2012 Jinno et al.
8,240,537 B2 8/2012 Marczyk
8,241,271 B2 8/2012 Millman et al.
8,241,284 B2 8/2012 Dycus et al.
8,241,308 B2 8/2012 Kortenbach et al.
8,241,322 B2 8/2012 Whitman et al.
8,245,594 B2 8/2012 Rogers et al.
8,245,898 B2 8/2012 Smith et al.
8,245,899 B2 8/2012 Swensgard et al.
8,245,900 B2 8/2012 Scirica
8,245,901 B2 8/2012 Stopek
8,246,608 B2 8/2012 Omori et al.
8,246,637 B2 8/2012 Viola et al.
8,252,009 B2 8/2012 Weller et al.
8,256,654 B2 9/2012 Bettuchi et al.
8,256,655 B2 9/2012 Sniffin et al.
8,256,656 B2 9/2012 Milliman et al.
8,257,251 B2 9/2012 Shelton, IV et al.
8,257,356 B2 9/2012 Bleich et al.
8,257,386 B2 9/2012 Lee et al.
8,257,391 B2 9/2012 Orban, III et al.
8,257,634 B2 9/2012 Scirica
8,258,745 B2 9/2012 Smith et al.
8,261,958 B1 9/2012 Knodel
8,262,560 B2 9/2012 Whitman
8,262,655 B2 9/2012 Ghabrial et al.
8,266,232 B2 9/2012 Piper et al.
8,267,300 B2 9/2012 Boudreaux
8,267,849 B2 9/2012 Wazer et al.
8,267,924 B2 9/2012 Zemlok et al.
8,267,946 B2 9/2012 Whitfield et al.
8,267,951 B2 9/2012 Whayne et al.
8,268,344 B2 9/2012 Ma et al.
8,269,121 B2 9/2012 Smith
8,272,553 B2 9/2012 Mastri et al.
8,272,554 B2 9/2012 Whitman et al.
8,272,918 B2 9/2012 Lam
8,273,404 B2 9/2012 Dave et al.
8,276,594 B2 10/2012 Shah
8,276,801 B2 10/2012 Zemlok et al.
8,276,802 B2 10/2012 Kostrzewski
8,277,473 B2 10/2012 Sunaoshi et al.
8,281,446 B2 10/2012 Moskovich
8,281,973 B2 10/2012 Wenchell et al.
8,281,974 B2 10/2012 Hessler et al.
8,282,654 B2 10/2012 Ferrari et al.
8,285,367 B2 10/2012 Hyde et al.
8,286,723 B2 10/2012 Puzio et al.
8,286,845 B2 10/2012 Perry et al.
8,286,846 B2 10/2012 Smith et al.
8,286,847 B2 10/2012 Taylor
8,287,487 B2 10/2012 Estes
8,287,522 B2 10/2012 Moses et al.
8,287,561 B2 10/2012 Nunez et al.
8,288,984 B2 10/2012 Yang
8,289,403 B2 10/2012 Dobashi et al.
8,290,883 B2 10/2012 Takeuchi et al.
8,292,147 B2 10/2012 Viola
8,292,148 B2 10/2012 Viola
8,292,150 B2 10/2012 Bryant
8,292,151 B2 10/2012 Viola
8,292,152 B2 10/2012 Milliman et al.
8,292,155 B2 10/2012 Shelton, IV et al.
8,292,157 B2 10/2012 Smith et al.
8,292,158 B2 10/2012 Sapienza
8,292,801 B2 10/2012 Dejima et al.
8,292,888 B2 10/2012 Whitman
8,292,906 B2 10/2012 Taylor et al.
8,294,399 B2 10/2012 Suzuki et al.
8,298,161 B2 10/2012 Vargas
8,298,189 B2 10/2012 Fisher et al.
8,298,233 B2 10/2012 Mueller
8,298,677 B2 10/2012 Wiesner et al.
8,302,323 B2 11/2012 Fortier et al.
8,303,621 B2 11/2012 Miyamoto et al.
8,308,040 B2 11/2012 Huang et al.
8,308,041 B2 11/2012 Kostrzewski
8,308,042 B2 11/2012 Aranyi
8,308,043 B2 11/2012 Bindra et al.
8,308,046 B2 11/2012 Prommersberger
8,308,659 B2 11/2012 Scheibe et al.
8,308,725 B2 11/2012 Bell et al.
8,310,188 B2 11/2012 Nakai
8,313,496 B2 11/2012 Sauer et al.
8,313,499 B2 11/2012 Magnusson et al.
8,313,509 B2 11/2012 Kostrzewski
8,317,070 B2 11/2012 Hueil et al.
8,317,071 B1 11/2012 Knodel
8,317,074 B2 11/2012 Ortiz et al.
8,317,437 B2 11/2012 Merkley et al.
8,317,744 B2 11/2012 Kirschenman
8,317,790 B2 11/2012 Bell et al.
8,319,002 B2 11/2012 Daniels et al.

(56) **References Cited**

U.S. PATENT DOCUMENTS

D672,784	S	12/2012	Clanton et al.
8,322,455	B2	12/2012	Shelton, IV et al.
8,322,589	B2	12/2012	Boudreaux
8,322,590	B2	12/2012	Patel et al.
8,322,901	B2	12/2012	Michelotti
8,323,271	B2	12/2012	Humayun et al.
8,323,789	B2	12/2012	Rozhin et al.
8,324,585	B2	12/2012	McBroom et al.
8,327,514	B2	12/2012	Kim
8,328,061	B2	12/2012	Kasvikis
8,328,062	B2	12/2012	Viola
8,328,063	B2	12/2012	Milliman et al.
8,328,064	B2	12/2012	Racenet et al.
8,328,065	B2	12/2012	Shah
8,328,802	B2	12/2012	Deville et al.
8,328,823	B2	12/2012	Aranyi et al.
8,333,313	B2	12/2012	Boudreaux et al.
8,333,691	B2	12/2012	Schaaf
8,333,764	B2	12/2012	Francischelli et al.
8,333,779	B2	12/2012	Smith et al.
8,334,468	B2	12/2012	Palmer et al.
8,336,753	B2	12/2012	Olson et al.
8,336,754	B2	12/2012	Cappola et al.
8,342,377	B2	1/2013	Milliman et al.
8,342,378	B2	1/2013	Marczyk et al.
8,342,379	B2	1/2013	Whitman et al.
8,342,380	B2	1/2013	Viola
8,343,150	B2	1/2013	Artale
8,347,978	B2	1/2013	Forster et al.
8,348,118	B2	1/2013	Segura
8,348,123	B2	1/2013	Scirica et al.
8,348,124	B2	1/2013	Scirica
8,348,125	B2	1/2013	Viola et al.
8,348,126	B2	1/2013	Olson et al.
8,348,127	B2	1/2013	Marczyk
8,348,129	B2	1/2013	Bedi et al.
8,348,130	B2	1/2013	Shah et al.
8,348,131	B2	1/2013	Omaits et al.
8,348,837	B2	1/2013	Wenchell
8,348,948	B2	1/2013	Bahney
8,348,959	B2	1/2013	Wolford et al.
8,348,972	B2	1/2013	Soltz et al.
8,349,987	B2	1/2013	Kapiamba et al.
8,352,004	B2	1/2013	Mannheimer et al.
8,353,437	B2	1/2013	Boudreaux
8,353,438	B2	1/2013	Baxter, III et al.
8,353,439	B2	1/2013	Baxter, III et al.
8,356,740	B1	1/2013	Knodel
8,357,144	B2	1/2013	Whitman et al.
8,357,158	B2	1/2013	Mckenna et al.
8,357,161	B2	1/2013	Mueller
8,359,174	B2	1/2013	Nakashima et al.
8,360,296	B2	1/2013	Zingman
8,360,297	B2	1/2013	Shelton, IV et al.
8,360,298	B2	1/2013	Farascioni et al.
8,360,299	B2	1/2013	Zemlok et al.
8,361,501	B2	1/2013	DiTizio et al.
D676,866	S	2/2013	Chaudhri
8,365,972	B2	2/2013	Aranyi et al.
8,365,973	B1	2/2013	White et al.
8,365,975	B1	2/2013	Manoux et al.
8,365,976	B2	2/2013	Hess et al.
8,366,559	B2	2/2013	Papenfuss et al.
8,366,719	B2	2/2013	Markey et al.
8,366,787	B2	2/2013	Brown et al.
8,368,327	B2	2/2013	Benning et al.
8,369,056	B2	2/2013	Senriuchi et al.
8,371,393	B2	2/2013	Higuchi et al.
8,371,491	B2	2/2013	Huitema et al.
8,371,492	B2	2/2013	Aranyi et al.
8,371,493	B2	2/2013	Aranyi et al.
8,371,494	B2	2/2013	Racenet et al.
8,372,094	B2	2/2013	Bettuchi et al.
8,374,723	B2	2/2013	Zhao et al.
8,376,865	B2	2/2013	Forster et al.
8,377,029	B2	2/2013	Nagao et al.
8,377,044	B2	2/2013	Coe et al.
8,377,059	B2	2/2013	Deville et al.
8,381,828	B2	2/2013	Whitman et al.
8,381,834	B2	2/2013	Barhitte et al.
8,382,773	B2	2/2013	Whitfield et al.
8,382,790	B2	2/2013	Uenohara et al.
D677,273	S	3/2013	Randall et al.
8,387,848	B2	3/2013	Johnson et al.
8,388,633	B2	3/2013	Rousseau et al.
8,389,588	B2	3/2013	Ringeisen et al.
8,393,513	B2	3/2013	Jankowski
8,393,514	B2	3/2013	Shelton, IV et al.
8,393,516	B2	3/2013	Kostrzewski
8,397,832	B2	3/2013	Blickle et al.
8,397,971	B2	3/2013	Yates et al.
8,397,972	B2	3/2013	Kostrzewski
8,397,973	B1	3/2013	Hausen
8,398,633	B2	3/2013	Mueller
8,398,669	B2	3/2013	Kim
8,398,673	B2	3/2013	Hinchliffe et al.
8,398,674	B2	3/2013	Prestel
8,400,108	B2	3/2013	Powell et al.
8,400,851	B2	3/2013	Byun
8,403,138	B2	3/2013	Weisshaupt et al.
8,403,195	B2	3/2013	Beardsley et al.
8,403,196	B2	3/2013	Beardsley et al.
8,403,198	B2	3/2013	Sorrentino et al.
8,403,832	B2	3/2013	Cunningham et al.
8,403,926	B2	3/2013	Nobis et al.
8,403,945	B2	3/2013	Whitfield et al.
8,403,946	B2	3/2013	Whitfield et al.
8,403,950	B2	3/2013	Palmer et al.
D680,646	S	4/2013	Hunt et al.
8,408,439	B2	4/2013	Huang et al.
8,408,442	B2	4/2013	Racenet et al.
8,409,079	B2	4/2013	Okamoto et al.
8,409,174	B2	4/2013	Omori
8,409,175	B2	4/2013	Lee et al.
8,409,211	B2	4/2013	Baroud
8,409,222	B2	4/2013	Whitfield et al.
8,409,223	B2	4/2013	Sorrentino et al.
8,409,234	B2	4/2013	Stahler et al.
8,411,500	B2	4/2013	Gapihan et al.
8,413,661	B2	4/2013	Rousseau et al.
8,413,870	B2	4/2013	Pastorelli et al.
8,413,871	B2	4/2013	Racenet et al.
8,413,872	B2	4/2013	Patel
8,414,469	B2	4/2013	Diolaiti
8,414,577	B2	4/2013	Boudreaux et al.
8,414,598	B2	4/2013	Brock et al.
8,418,073	B2	4/2013	Mohr et al.
8,418,906	B2	4/2013	Farascioni et al.
8,418,907	B2	4/2013	Johnson et al.
8,418,908	B1	4/2013	Beardsley
8,418,909	B2	4/2013	Kostrzewski
8,419,635	B2	4/2013	Shelton, IV et al.
8,419,717	B2	4/2013	Diolaiti et al.
8,419,747	B2	4/2013	Hinman et al.
8,419,754	B2	4/2013	Laby et al.
8,419,755	B2	4/2013	Deem et al.
8,423,182	B2	4/2013	Robinson et al.
8,424,737	B2	4/2013	Scirica
8,424,739	B2	4/2013	Racenet et al.
8,424,740	B2	4/2013	Shelton, IV et al.
8,424,741	B2	4/2013	McGuckin, Jr. et al.
8,425,600	B2	4/2013	Maxwell
8,427,430	B2	4/2013	Lee et al.
8,430,292	B2	4/2013	Patel et al.
8,430,892	B2	4/2013	Bindra et al.
8,430,898	B2	4/2013	Wiener et al.
8,435,257	B2	5/2013	Smith et al.
8,439,246	B1	5/2013	Knodel
8,439,830	B2	5/2013	McKinley et al.
8,444,036	B2	5/2013	Shelton, IV
8,444,037	B2	5/2013	Nicholas et al.
8,444,549	B2	5/2013	Viola et al.
8,449,536	B2	5/2013	Selig
8,449,560	B2	5/2013	Roth et al.

(56) **References Cited**

U.S. PATENT DOCUMENTS

8,453,904 B2 6/2013 Eskaros et al.
8,453,906 B2 6/2013 Huang et al.
8,453,907 B2 6/2013 Laurent et al.
8,453,908 B2 6/2013 Bedi et al.
8,453,912 B2 6/2013 Mastri et al.
8,453,914 B2 6/2013 Laurent et al.
8,454,495 B2 6/2013 Kawano et al.
8,454,551 B2 6/2013 Allen et al.
8,454,628 B2 6/2013 Smith et al.
8,454,640 B2 6/2013 Johnston et al.
8,457,757 B2 6/2013 Cauller et al.
8,459,520 B2 6/2013 Giordano et al.
8,459,521 B2 6/2013 Zemlok et al.
8,459,524 B2 6/2013 Pribanic et al.
8,459,525 B2 6/2013 Yates et al.
8,464,922 B2 6/2013 Marczyk
8,464,923 B2 6/2013 Shelton, IV
8,464,924 B2 6/2013 Gresham et al.
8,464,925 B2 6/2013 Hull et al.
8,465,475 B2 6/2013 Isbell, Jr.
8,465,502 B2 6/2013 Zergiebel
8,465,515 B2 6/2013 Drew et al.
8,469,254 B2 6/2013 Czernik et al.
8,469,946 B2 6/2013 Sugita
8,469,973 B2 6/2013 Meade et al.
8,470,355 B2 6/2013 Skalla et al.
D686,240 S 7/2013 Lin
D686,244 S 7/2013 Moriya et al.
8,474,677 B2 7/2013 Woodard, Jr. et al.
8,475,453 B2 7/2013 Marczyk et al.
8,475,454 B1 7/2013 Alshemari
8,475,474 B2 7/2013 Bombard et al.
8,479,968 B2 7/2013 Hodgkinson et al.
8,479,969 B2 7/2013 Shelton, IV
8,480,703 B2 7/2013 Nicholas et al.
8,483,509 B2 7/2013 Matsuzaka
8,485,412 B2 7/2013 Shelton, IV et al.
8,485,413 B2 7/2013 Scheib et al.
8,485,970 B2 7/2013 Widenhouse et al.
8,486,047 B2 7/2013 Stopek
8,487,199 B2 7/2013 Palmer et al.
8,487,487 B2 7/2013 Dietz et al.
8,490,851 B2 7/2013 Blier et al.
8,490,852 B2 7/2013 Viola
8,490,853 B2 7/2013 Criscuolo et al.
8,491,581 B2 7/2013 Deville et al.
8,491,603 B2 7/2013 Yeung et al.
8,496,153 B2 7/2013 Demmy et al.
8,496,154 B2 7/2013 Marczyk et al.
8,496,156 B2 7/2013 Sniffin et al.
8,496,683 B2 7/2013 Prommersberger et al.
8,498,691 B2 7/2013 Moll et al.
8,499,673 B2 8/2013 Keller
8,499,966 B2 8/2013 Palmer et al.
8,499,992 B2 8/2013 Whitman et al.
8,499,993 B2 8/2013 Shelton, IV et al.
8,499,994 B2 8/2013 D'Arcangelo
8,500,721 B2 8/2013 Jinno
8,500,762 B2 8/2013 Sholev et al.
8,502,091 B2 8/2013 Palmer et al.
8,505,799 B2 8/2013 Viola et al.
8,505,801 B2 8/2013 Ehrenfels et al.
8,506,555 B2 8/2013 Ruiz Morales
8,506,557 B2 8/2013 Zemlok et al.
8,506,580 B2 8/2013 Zergiebel et al.
8,506,581 B2 8/2013 Wingardner, III et al.
8,511,308 B2 8/2013 Hecox et al.
8,512,359 B2 8/2013 Whitman et al.
8,512,402 B2 8/2013 Marczyk et al.
8,517,239 B2 8/2013 Scheib et al.
8,517,241 B2 8/2013 Nicholas et al.
8,517,243 B2 8/2013 Giordano et al.
8,517,244 B2 8/2013 Shelton, IV et al.
8,517,938 B2 8/2013 Eisenhardt et al.
8,518,024 B2 8/2013 Williams et al.
8,521,273 B2 8/2013 Kliman
8,523,042 B2 9/2013 Masiakos et al.
8,523,043 B2 9/2013 Ullrich et al.
8,523,787 B2 9/2013 Ludwin et al.
8,523,881 B2 9/2013 Cabiri et al.
8,523,882 B2 9/2013 Huitema et al.
8,523,900 B2 9/2013 Jinno et al.
8,529,588 B2 9/2013 Ahlberg et al.
8,529,599 B2 9/2013 Holsten
8,529,600 B2 9/2013 Woodard, Jr. et al.
8,529,819 B2 9/2013 Ostapoff et al.
8,531,153 B2 9/2013 Baarman et al.
8,532,747 B2 9/2013 Nock et al.
8,534,527 B2 9/2013 Brendel et al.
8,534,528 B2 9/2013 Shelton, IV
8,535,304 B2 9/2013 Sklar et al.
8,535,340 B2 9/2013 Allen
8,539,866 B2 9/2013 Nayak et al.
8,540,128 B2 9/2013 Shelton, IV et al.
8,540,129 B2 9/2013 Baxter, III et al.
8,540,130 B2 9/2013 Moore et al.
8,540,131 B2 9/2013 Swayze
8,540,133 B2 9/2013 Bedi et al.
8,540,646 B2 9/2013 Mendez-Coll
8,540,733 B2 9/2013 Whitman et al.
8,540,735 B2 9/2013 Mitelberg et al.
8,550,984 B2 10/2013 Takemoto
8,551,076 B2 10/2013 Duval et al.
8,555,660 B2 10/2013 Takenaka et al.
8,556,151 B2 10/2013 Viola
8,556,918 B2 10/2013 Bauman et al.
8,556,935 B1 10/2013 Knodel et al.
8,560,147 B2 10/2013 Taylor et al.
8,561,617 B2 10/2013 Lindh et al.
8,561,870 B2 10/2013 Baxter, III et al.
8,561,871 B2 10/2013 Rajappa et al.
8,561,873 B2 10/2013 Ingmanson et al.
8,562,592 B2 10/2013 Conlon et al.
8,562,598 B2 10/2013 Falkenstein et al.
8,567,656 B2 10/2013 Shelton, IV et al.
8,568,416 B2 10/2013 Schmitz et al.
8,568,425 B2 10/2013 Ross et al.
D692,916 S 11/2013 Granchi et al.
8,573,459 B2 11/2013 Smith et al.
8,573,461 B2 11/2013 Shelton, IV et al.
8,573,462 B2 11/2013 Smith et al.
8,573,465 B2 11/2013 Shelton, IV
8,574,199 B2 11/2013 von Bulow et al.
8,574,263 B2 11/2013 Mueller
8,575,880 B2 11/2013 Grantz
8,575,895 B2 11/2013 Garrastacho et al.
8,579,176 B2 11/2013 Smith et al.
8,579,178 B2 11/2013 Holsten et al.
8,579,897 B2 11/2013 Vakharia et al.
8,579,937 B2 11/2013 Gresham
8,584,919 B2 11/2013 Hueil et al.
8,584,920 B2 11/2013 Hodgkinson
8,584,921 B2 11/2013 Scirica
8,585,583 B2 11/2013 Sakaguchi et al.
8,585,598 B2 11/2013 Razzaque et al.
8,585,721 B2 11/2013 Kirsch
8,590,760 B2 11/2013 Cummins et al.
8,590,762 B2 11/2013 Hess et al.
8,590,764 B2 11/2013 Hartwick et al.
8,591,400 B2 11/2013 Sugiyama
8,596,515 B2 12/2013 Okoniewski
8,597,745 B2 12/2013 Farnsworth et al.
8,599,450 B2 12/2013 Kubo et al.
8,602,125 B2 12/2013 King
8,602,287 B2 12/2013 Yates et al.
8,602,288 B2 12/2013 Shelton, IV et al.
8,603,077 B2 12/2013 Cooper et al.
8,603,089 B2 12/2013 Viola
8,603,110 B2 12/2013 Maruyama et al.
8,603,135 B2 12/2013 Mueller
8,608,043 B2 12/2013 Scirica
8,608,044 B2 12/2013 Hueil et al.
8,608,045 B2 12/2013 Smith et al.
8,608,046 B2 12/2013 Laurent et al.

(56) **References Cited**

U.S. PATENT DOCUMENTS

8,608,745 B2 12/2013 Guzman et al.
8,613,383 B2 12/2013 Beckman et al.
8,613,384 B2 12/2013 Pastorelli et al.
8,616,427 B2 12/2013 Viola
8,616,431 B2 12/2013 Timm et al.
8,617,155 B2 12/2013 Johnson et al.
8,620,473 B2 12/2013 Diolaiti et al.
8,622,274 B2 1/2014 Yates et al.
8,622,275 B2 1/2014 Baxter, III et al.
8,627,993 B2 1/2014 Smith et al.
8,627,994 B2 1/2014 Zemlok et al.
8,627,995 B2 1/2014 Smith et al.
8,628,467 B2 1/2014 Whitman et al.
8,628,518 B2 1/2014 Blumenkranz et al.
8,628,544 B2 1/2014 Farascioni
8,628,545 B2 1/2014 Cabrera et al.
8,631,987 B2 1/2014 Shelton, IV et al.
8,631,992 B1 1/2014 Hausen et al.
8,631,993 B2 1/2014 Kostrzewski
8,632,462 B2 1/2014 Yoo et al.
8,632,525 B2 1/2014 Kerr et al.
8,632,535 B2 1/2014 Shelton, IV et al.
8,632,539 B2 1/2014 Twomey et al.
8,632,563 B2 1/2014 Nagase et al.
8,636,187 B2 1/2014 Hueil et al.
8,636,190 B2 1/2014 Zemlok et al.
8,636,191 B2 1/2014 Meagher
8,636,193 B2 1/2014 Whitman et al.
8,636,736 B2 1/2014 Yates et al.
8,636,766 B2 1/2014 Milliman et al.
8,639,936 B2 1/2014 Hu et al.
8,640,788 B2 2/2014 Dachs, II et al.
8,646,674 B2 2/2014 Schulte et al.
8,647,258 B2 2/2014 Aranyi et al.
8,652,120 B2 2/2014 Giordano et al.
8,652,151 B2 2/2014 Lehman et al.
8,652,155 B2 2/2014 Houser et al.
8,656,929 B2 2/2014 Miller et al.
8,657,174 B2 2/2014 Yates et al.
8,657,175 B2 2/2014 Sonnenschein et al.
8,657,176 B2 2/2014 Shelton, IV et al.
8,657,177 B2 2/2014 Scirica et al.
8,657,178 B2 2/2014 Hueil et al.
8,657,482 B2 2/2014 Malackowski et al.
8,657,808 B2 2/2014 McPherson et al.
8,657,814 B2 2/2014 Werneth et al.
8,657,821 B2 2/2014 Palermo
D701,238 S 3/2014 Lai et al.
8,662,370 B2 3/2014 Takei
8,663,106 B2 3/2014 Stivoric et al.
8,663,192 B2 3/2014 Hester et al.
8,663,245 B2 3/2014 Francischelli et al.
8,663,262 B2 3/2014 Smith et al.
8,663,270 B2 3/2014 Donnigan et al.
8,664,792 B2 3/2014 Rebsdorf
8,668,129 B2 3/2014 Olson
8,668,130 B2 3/2014 Hess et al.
8,672,206 B2 3/2014 Aranyi et al.
8,672,207 B2 3/2014 Shelton, IV et al.
8,672,208 B2 3/2014 Hess et al.
8,672,209 B2 3/2014 Crainich
8,672,922 B2 3/2014 Loh et al.
8,672,935 B2 3/2014 Okada et al.
8,672,951 B2 3/2014 Smith et al.
8,673,210 B2 3/2014 Deshays
8,675,820 B2 3/2014 Baic et al.
8,678,263 B2 3/2014 Viola
8,678,994 B2 3/2014 Sonnenschein et al.
8,679,093 B2 3/2014 Farra
8,679,098 B2 3/2014 Hart
8,679,137 B2 3/2014 Bauman et al.
8,679,154 B2 3/2014 Smith et al.
8,679,156 B2 3/2014 Smith et al.
8,679,454 B2 3/2014 Guire et al.
8,684,248 B2 4/2014 Milliman
8,684,249 B2 4/2014 Racenet et al.
8,684,250 B2 4/2014 Bettuchi et al.
8,684,253 B2 4/2014 Giordano et al.
8,684,962 B2 4/2014 Kirschenman et al.
8,685,004 B2 4/2014 Zemlock et al.
8,685,020 B2 4/2014 Weizman et al.
8,690,893 B2 4/2014 Deitch et al.
8,695,866 B2 4/2014 Leimbach et al.
8,696,665 B2 4/2014 Hunt et al.
8,701,958 B2 4/2014 Shelton, IV et al.
8,701,959 B2 4/2014 Shah
8,706,316 B1 4/2014 Hoevenaar
8,708,210 B2 4/2014 Zemlok et al.
8,708,211 B2 4/2014 Zemlok et al.
8,708,212 B2 4/2014 Williams
8,708,213 B2 4/2014 Shelton, IV et al.
8,709,012 B2 4/2014 Muller
8,714,352 B2 5/2014 Farascioni et al.
8,714,429 B2 5/2014 Demmy
8,714,430 B2 5/2014 Natarajan et al.
8,715,256 B2 5/2014 Greener
8,715,302 B2 5/2014 Ibrahim et al.
8,720,766 B2 5/2014 Hess et al.
8,721,630 B2 5/2014 Ortiz et al.
8,721,666 B2 5/2014 Schroeder et al.
8,727,197 B2 5/2014 Hess et al.
8,727,199 B2 5/2014 Wenchell
8,727,200 B2 5/2014 Roy
8,727,961 B2 5/2014 Ziv
8,728,099 B2 5/2014 Cohn et al.
8,728,119 B2 5/2014 Cummins
8,733,470 B2 5/2014 Matthias et al.
8,733,611 B2 5/2014 Milliman
8,733,612 B2 5/2014 Ma
8,733,613 B2 5/2014 Huitema et al.
8,733,614 B2 5/2014 Ross et al.
8,734,336 B2 5/2014 Bonadio et al.
8,734,359 B2 5/2014 Ibanez et al.
8,734,478 B2 5/2014 Widenhouse et al.
8,734,831 B2 5/2014 Kim et al.
8,739,033 B2 5/2014 Rosenberg
8,739,417 B2 6/2014 Tokunaga et al.
8,740,034 B2 6/2014 Morgan et al.
8,740,037 B2 6/2014 Shelton, IV et al.
8,740,038 B2 6/2014 Shelton, IV et al.
8,740,987 B2 6/2014 Geremakis et al.
8,746,529 B2 6/2014 Shelton, IV et al.
8,746,530 B2 6/2014 Giordano et al.
8,746,533 B2 6/2014 Whitman et al.
8,746,535 B2 6/2014 Shelton, IV et al.
8,747,238 B2 6/2014 Shelton, IV et al.
8,747,441 B2 6/2014 Konieczynski et al.
8,752,264 B2 6/2014 Ackley et al.
8,752,699 B2 6/2014 Morgan et al.
8,752,747 B2 6/2014 Shelton, IV et al.
8,752,748 B2 6/2014 Whitman et al.
8,752,749 B2 6/2014 Moore et al.
8,753,664 B2 6/2014 Dao et al.
8,757,287 B2 6/2014 Mak et al.
8,757,465 B2 6/2014 Woodard, Jr. et al.
8,758,235 B2 6/2014 Jaworek
8,758,366 B2 6/2014 McLean et al.
8,758,391 B2 6/2014 Swayze et al.
8,758,438 B2 6/2014 Boyce et al.
8,763,875 B2 7/2014 Morgan et al.
8,763,876 B2 7/2014 Kostrzewski
8,763,877 B2 7/2014 Schall et al.
8,763,879 B2 7/2014 Shelton, IV et al.
8,764,732 B2 7/2014 Hartwell
8,765,942 B2 7/2014 Feraud et al.
8,770,458 B2 7/2014 Scirica
8,770,459 B2 7/2014 Racenet et al.
8,770,460 B2 7/2014 Belzer
8,771,169 B2 7/2014 Whitman et al.
8,771,260 B2 7/2014 Conlon et al.
8,777,004 B2 7/2014 Shelton, IV et al.
8,777,082 B2 7/2014 Scirica
8,777,083 B2 7/2014 Racenet et al.
8,777,898 B2 7/2014 Suon et al.

(56) **References Cited**

U.S. PATENT DOCUMENTS

8,783,541	B2	7/2014	Shelton, IV et al.
8,783,542	B2	7/2014	Riestenberg et al.
8,783,543	B2	7/2014	Shelton, IV et al.
8,784,304	B2	7/2014	Mikkaichi et al.
8,784,404	B2	7/2014	Doyle et al.
8,784,415	B2	7/2014	Malackowski et al.
8,789,737	B2	7/2014	Hodgkinson et al.
8,789,739	B2	7/2014	Swensgard
8,789,740	B2	7/2014	Baxter, III et al.
8,789,741	B2	7/2014	Baxter, III et al.
8,790,658	B2	7/2014	Cigarini et al.
8,790,684	B2	7/2014	Dave et al.
D711,905	S	8/2014	Morrison et al.
8,794,496	B2	8/2014	Scirica
8,794,497	B2	8/2014	Zingman
8,795,159	B2	8/2014	Moriyama
8,795,276	B2	8/2014	Dietz et al.
8,795,308	B2	8/2014	Valin
8,795,324	B2	8/2014	Kawai et al.
8,796,995	B2	8/2014	Cunanan et al.
8,800,681	B2	8/2014	Rousson et al.
8,800,837	B2	8/2014	Zemlok
8,800,838	B2	8/2014	Shelton, IV
8,800,839	B2	8/2014	Beetel
8,800,840	B2	8/2014	Jankowski
8,800,841	B2	8/2014	Ellerhorst et al.
8,801,710	B2	8/2014	Ullrich et al.
8,801,734	B2	8/2014	Shelton, IV et al.
8,801,735	B2	8/2014	Shelton, IV et al.
8,801,752	B2	8/2014	Fortier et al.
8,801,801	B2	8/2014	Datta et al.
8,806,973	B2	8/2014	Ross et al.
8,807,414	B2	8/2014	Ross et al.
8,808,161	B2	8/2014	Gregg et al.
8,808,164	B2	8/2014	Hoffman et al.
8,808,274	B2	8/2014	Hartwell
8,808,294	B2	8/2014	Fox et al.
8,808,308	B2	8/2014	Boukhny et al.
8,808,311	B2	8/2014	Heinrich et al.
8,808,325	B2	8/2014	Hess et al.
8,810,197	B2	8/2014	Juergens
8,811,017	B2	8/2014	Fujii et al.
8,813,866	B2	8/2014	Suzuki
8,814,024	B2	8/2014	Woodard, Jr. et al.
8,814,025	B2	8/2014	Miller et al.
8,814,836	B2	8/2014	Ignon et al.
8,815,594	B2	8/2014	Harris et al.
8,818,523	B2	8/2014	Olson et al.
8,820,603	B2	9/2014	Shelton, IV et al.
8,820,605	B2	9/2014	Shelton, IV
8,820,606	B2	9/2014	Hodgkinson
8,820,607	B2	9/2014	Marczyk
8,820,608	B2	9/2014	Miyamoto
8,821,514	B2	9/2014	Aranyi
8,822,934	B2	9/2014	Sayeh et al.
8,825,164	B2	9/2014	Tweden et al.
8,827,133	B2	9/2014	Shelton, IV et al.
8,827,134	B2	9/2014	Viola et al.
8,827,903	B2	9/2014	Shelton, IV et al.
8,828,046	B2	9/2014	Stefanchik et al.
8,831,779	B2	9/2014	Ortmaier et al.
8,833,219	B2	9/2014	Pierce
8,833,630	B2	9/2014	Milliman
8,833,632	B2	9/2014	Swensgard
8,834,353	B2	9/2014	Dejima et al.
8,834,465	B2	9/2014	Ramstein et al.
8,834,498	B2	9/2014	Byrum et al.
8,834,518	B2	9/2014	Faller et al.
8,840,003	B2	9/2014	Morgan et al.
8,840,004	B2	9/2014	Holsten et al.
8,840,603	B2	9/2014	Shelton, IV et al.
8,840,609	B2	9/2014	Stuebe
8,840,876	B2	9/2014	Eemeta et al.
8,844,789	B2	9/2014	Shelton, IV et al.
8,844,790	B2	9/2014	Demmy et al.
8,845,622	B2	9/2014	Paik et al.
8,851,215	B2	10/2014	Goto
8,851,354	B2	10/2014	Swensgard et al.
8,851,355	B2	10/2014	Aranyi et al.
8,852,174	B2	10/2014	Burbank
8,852,185	B2	10/2014	Twomey
8,852,199	B2	10/2014	Deslauriers et al.
8,852,218	B2	10/2014	Hughett, Sr. et al.
8,855,822	B2	10/2014	Bartol et al.
8,857,693	B2	10/2014	Schuckmann et al.
8,857,694	B2	10/2014	Shelton, IV et al.
8,858,538	B2	10/2014	Belson et al.
8,858,547	B2	10/2014	Brogna
8,858,571	B2	10/2014	Shelton, IV et al.
8,858,590	B2	10/2014	Shelton, IV et al.
8,864,007	B2	10/2014	Widenhouse et al.
8,864,009	B2	10/2014	Shelton, IV et al.
8,864,010	B2	10/2014	Williams
8,864,750	B2	10/2014	Ross et al.
8,869,912	B2	10/2014	Roßkamp et al.
8,869,913	B2	10/2014	Matthias et al.
8,870,049	B2	10/2014	Amid et al.
8,870,050	B2	10/2014	Hodgkinson
8,870,867	B2	10/2014	Walberg et al.
8,870,912	B2	10/2014	Brisson et al.
8,871,829	B2	10/2014	Gerold et al.
8,875,971	B2	11/2014	Hall et al.
8,875,972	B2	11/2014	Weisenburgh, II et al.
8,876,698	B2	11/2014	Sakamoto et al.
8,876,857	B2	11/2014	Burbank
8,876,858	B2	11/2014	Braun
8,882,660	B2	11/2014	Phee et al.
8,882,792	B2	11/2014	Dietz et al.
8,884,560	B2	11/2014	Ito
8,887,979	B2	11/2014	Mastri et al.
8,888,688	B2	11/2014	Julian et al.
8,888,695	B2	11/2014	Piskun et al.
8,888,792	B2	11/2014	Harris et al.
8,888,809	B2	11/2014	Davison et al.
8,893,946	B2	11/2014	Boudreaux et al.
8,893,949	B2	11/2014	Shelton, IV et al.
8,894,647	B2	11/2014	Beardsley et al.
8,894,654	B2	11/2014	Anderson
8,899,460	B2	12/2014	Wojcicki
8,899,461	B2	12/2014	Farascioni
8,899,462	B2	12/2014	Kostrzewski et al.
8,899,463	B2	12/2014	Schall et al.
8,899,464	B2	12/2014	Hueil et al.
8,899,465	B2	12/2014	Shelton, IV et al.
8,899,466	B2	12/2014	Baxter, III et al.
8,900,267	B2	12/2014	Woolfson et al.
8,905,287	B2	12/2014	Racenet et al.
8,905,977	B2	12/2014	Shelton et al.
8,910,846	B2	12/2014	Viola
8,910,847	B2	12/2014	Nalagatla et al.
8,911,426	B2	12/2014	Coppeta et al.
8,911,448	B2	12/2014	Stein
8,911,460	B2	12/2014	Neurohr et al.
8,911,471	B2	12/2014	Spivey et al.
8,912,746	B2	12/2014	Reid et al.
8,915,842	B2	12/2014	Weisenburgh, II et al.
8,920,368	B2	12/2014	Sandhu et al.
8,920,433	B2	12/2014	Barrier et al.
8,920,435	B2	12/2014	Smith et al.
8,920,438	B2	12/2014	Aranyi et al.
8,920,443	B2	12/2014	Hiles et al.
8,920,444	B2	12/2014	Hiles et al.
8,922,163	B2	12/2014	Macdonald
8,925,782	B2	1/2015	Shelton, IV
8,925,783	B2	1/2015	Zemlok et al.
8,925,788	B2	1/2015	Hess et al.
8,926,506	B2	1/2015	Widenhouse et al.
8,926,598	B2	1/2015	Mollere et al.
8,931,576	B2	1/2015	Iwata
8,931,679	B2	1/2015	Kostrzewski
8,931,680	B2	1/2015	Milliman
8,931,682	B2	1/2015	Timm et al.
8,931,692	B2	1/2015	Sancak
8,936,614	B2	1/2015	Allen, IV

(56) **References Cited**

U.S. PATENT DOCUMENTS

8,937,408 B2 1/2015 Ganem et al.
8,939,343 B2 1/2015 Milliman et al.
8,939,344 B2 1/2015 Olson et al.
8,939,898 B2 1/2015 Omoto
8,944,069 B2 2/2015 Miller et al.
8,945,095 B2 2/2015 Blumenkranz et al.
8,945,098 B2 2/2015 Seibold et al.
8,945,163 B2 2/2015 Voegele et al.
8,955,732 B2 2/2015 Zemlok et al.
8,956,342 B1 2/2015 Russo et al.
8,956,390 B2 2/2015 Shah et al.
8,958,860 B2 2/2015 Banerjee et al.
8,960,519 B2 2/2015 Whitman et al.
8,960,520 B2 2/2015 McCuen
8,960,521 B2 2/2015 Kostrzewski
8,961,191 B2 2/2015 Hanshew
8,961,504 B2 2/2015 Hoarau et al.
8,961,542 B2 2/2015 Whitfield et al.
8,963,714 B2 2/2015 Medhal et al.
D725,674 S 3/2015 Jung et al.
8,967,443 B2 3/2015 McCuen
8,967,444 B2 3/2015 Beetel
8,967,446 B2 3/2015 Beardsley et al.
8,967,448 B2 3/2015 Carter et al.
8,968,276 B2 3/2015 Zemlok et al.
8,968,308 B2 3/2015 Horner et al.
8,968,312 B2 3/2015 Marczyk et al.
8,968,337 B2 3/2015 Whitfield et al.
8,968,340 B2 3/2015 Chowaniec et al.
8,968,355 B2 3/2015 Malkowski et al.
8,968,358 B2 3/2015 Reschke
8,970,507 B2 3/2015 Holbein et al.
8,973,803 B2 3/2015 Hall et al.
8,973,804 B2 3/2015 Hess et al.
8,973,805 B2 3/2015 Scirica et al.
8,974,440 B2 3/2015 Farritor et al.
8,974,542 B2 3/2015 Fujimoto et al.
8,974,932 B2 3/2015 McGahan et al.
8,978,954 B2 3/2015 Shelton, IV et al.
8,978,955 B2 3/2015 Aronhalt et al.
8,978,956 B2 3/2015 Schall et al.
8,979,843 B2 3/2015 Timm et al.
8,979,890 B2 3/2015 Boudreaux
8,982,195 B2 3/2015 Claus et al.
8,984,711 B2 3/2015 Ota et al.
8,985,240 B2 3/2015 Winnard
8,985,429 B2 3/2015 Balek et al.
8,986,302 B2 3/2015 Aldridge et al.
8,989,903 B2 3/2015 Weir et al.
8,991,676 B2 3/2015 Hess et al.
8,991,677 B2 3/2015 Moore et al.
8,991,678 B2 3/2015 Wellman et al.
8,992,042 B2 3/2015 Eichenholz
8,992,422 B2 3/2015 Spivey et al.
8,992,565 B2 3/2015 Brisson et al.
8,996,165 B2 3/2015 Wang et al.
8,998,058 B2 4/2015 Moore et al.
8,998,059 B2 4/2015 Smith et al.
8,998,060 B2 4/2015 Bruewer et al.
8,998,061 B2 4/2015 Williams et al.
8,998,939 B2 4/2015 Price et al.
9,000,720 B2 4/2015 Stulen et al.
9,002,518 B2 4/2015 Manzo et al.
9,004,339 B1 4/2015 Park
9,004,799 B1 4/2015 Tibbits
9,005,230 B2 4/2015 Yates et al.
9,005,238 B2 4/2015 DeSantis et al.
9,005,243 B2 4/2015 Stopek et al.
9,010,606 B2 4/2015 Aranyi et al.
9,010,608 B2 4/2015 Casasanta, Jr. et al.
9,010,611 B2 4/2015 Ross et al.
9,011,437 B2 4/2015 Woodruff et al.
9,011,439 B2 4/2015 Shalaby et al.
9,011,471 B2 4/2015 Timm et al.
9,014,856 B2 4/2015 Manzo et al.
9,016,539 B2 4/2015 Kostrzewski et al.
9,016,540 B2 4/2015 Whitman et al.
9,016,541 B2 4/2015 Viola et al.
9,016,542 B2 4/2015 Shelton, IV et al.
9,016,545 B2 4/2015 Aranyi et al.
9,017,331 B2 4/2015 Fox
9,017,355 B2 4/2015 Smith et al.
9,017,369 B2 4/2015 Renger et al.
9,017,371 B2 4/2015 Whitman et al.
9,017,849 B2 4/2015 Stulen et al.
9,017,851 B2 4/2015 Felder et al.
D729,274 S 5/2015 Clement et al.
9,021,684 B2 5/2015 Lenker et al.
9,023,014 B2 5/2015 Chowaniec et al.
9,023,069 B2 5/2015 Kasvikis et al.
9,023,071 B2 5/2015 Miller et al.
9,026,347 B2 5/2015 Gadh et al.
9,027,817 B2 5/2015 Milliman et al.
9,028,468 B2 5/2015 Scarfogliero et al.
9,028,494 B2 5/2015 Shelton, IV et al.
9,028,495 B2 5/2015 Mueller et al.
9,028,510 B2 5/2015 Miyamoto et al.
9,028,511 B2 5/2015 Weller et al.
9,028,519 B2 5/2015 Yates et al.
9,028,529 B2 5/2015 Fox et al.
9,030,166 B2 5/2015 Kano
9,030,169 B2 5/2015 Christensen et al.
9,033,203 B2 5/2015 Woodard, Jr. et al.
9,033,204 B2 5/2015 Shelton, IV et al.
9,034,505 B2 5/2015 Detry et al.
9,038,881 B1 5/2015 Schaller et al.
9,039,690 B2 5/2015 Kersten et al.
9,039,694 B2 5/2015 Ross et al.
9,039,720 B2 5/2015 Madan
9,039,736 B2 5/2015 Scirica et al.
9,040,062 B2 5/2015 Maeda et al.
9,043,027 B2 5/2015 Durant et al.
9,044,227 B2 6/2015 Shelton, IV et al.
9,044,228 B2 6/2015 Woodard, Jr. et al.
9,044,229 B2 6/2015 Scheib et al.
9,044,230 B2 6/2015 Morgan et al.
9,044,238 B2 6/2015 Orszulak
9,044,241 B2 6/2015 Barner et al.
9,044,261 B2 6/2015 Houser
9,044,281 B2 6/2015 Pool et al.
9,050,083 B2 6/2015 Yates et al.
9,050,084 B2 6/2015 Schmid et al.
9,050,089 B2 6/2015 Orszulak
9,050,100 B2 6/2015 Yates et al.
9,050,120 B2 6/2015 Swarup et al.
9,050,123 B2 6/2015 Krause et al.
9,050,176 B2 6/2015 Datta et al.
9,050,192 B2 6/2015 Mansmann
9,055,941 B2 6/2015 Schmid et al.
9,055,942 B2 6/2015 Balbierz et al.
9,055,943 B2 6/2015 Zemlok et al.
9,055,944 B2 6/2015 Hodgkinson et al.
9,055,961 B2 6/2015 Manzo et al.
9,060,770 B2 6/2015 Shelton, IV et al.
9,060,776 B2 6/2015 Yates et al.
9,060,794 B2 6/2015 Kang et al.
9,060,894 B2 6/2015 Wubbeling
9,061,392 B2 6/2015 Forgues et al.
9,070,068 B2 6/2015 Coveley et al.
9,072,515 B2 7/2015 Hall et al.
9,072,523 B2 7/2015 Houser et al.
9,072,535 B2 7/2015 Shelton, IV et al.
9,072,536 B2 7/2015 Shelton, IV et al.
9,078,653 B2 7/2015 Leimbach et al.
9,078,654 B2 7/2015 Whitman et al.
9,084,586 B2 7/2015 Hafner et al.
9,084,601 B2 7/2015 Moore et al.
9,084,602 B2 7/2015 Gleiman
9,086,875 B2 7/2015 Harrat et al.
9,089,326 B2 7/2015 Krumanaker et al.
9,089,330 B2 7/2015 Widenhouse et al.
9,089,338 B2 7/2015 Smith et al.
9,089,352 B2 7/2015 Jeong
9,089,360 B2 7/2015 Messerly et al.

(56) **References Cited**

U.S. PATENT DOCUMENTS

9,091,588	B2	7/2015	Lefler
D736,792	S	8/2015	Brinda et al.
9,095,339	B2	8/2015	Moore et al.
9,095,346	B2	8/2015	Houser et al.
9,095,362	B2	8/2015	Dachs, II et al.
9,095,367	B2	8/2015	Olson et al.
9,095,642	B2	8/2015	Harder et al.
9,096,033	B2	8/2015	Holop et al.
9,098,153	B2	8/2015	Shen et al.
9,099,863	B2	8/2015	Smith et al.
9,099,877	B2	8/2015	Banos et al.
9,099,922	B2	8/2015	Toosky et al.
9,101,358	B2	8/2015	Kerr et al.
9,101,359	B2	8/2015	Smith et al.
9,101,385	B2	8/2015	Shelton, IV et al.
9,101,475	B2	8/2015	Wei et al.
9,101,621	B2	8/2015	Zeldis
9,107,663	B2	8/2015	Swensgard
9,107,667	B2	8/2015	Hodgkinson
9,107,690	B2	8/2015	Bales, Jr. et al.
9,110,587	B2	8/2015	Kim et al.
9,113,862	B2	8/2015	Morgan et al.
9,113,864	B2	8/2015	Morgan et al.
9,113,865	B2	8/2015	Shelton, IV et al.
9,113,868	B2	8/2015	Felder et al.
9,113,873	B2	8/2015	Marczyk et al.
9,113,874	B2	8/2015	Shelton, IV et al.
9,113,875	B2	8/2015	Viola et al.
9,113,876	B2	8/2015	Zemlok et al.
9,113,879	B2	8/2015	Felder et al.
9,113,880	B2	8/2015	Zemlok et al.
9,113,881	B2	8/2015	Scirica
9,113,883	B2	8/2015	Aronhalt et al.
9,113,884	B2	8/2015	Shelton, IV et al.
9,113,887	B2	8/2015	Behnke, II et al.
9,119,615	B2	9/2015	Felder et al.
9,119,657	B2	9/2015	Shelton, IV et al.
9,119,898	B2	9/2015	Bayon et al.
9,119,957	B2	9/2015	Gantz et al.
9,123,286	B2	9/2015	Park
9,124,097	B2	9/2015	Cruz
9,125,651	B2	9/2015	Mandakolathur Vasudevan et al.
9,125,654	B2	9/2015	Aronhalt et al.
9,125,662	B2	9/2015	Shelton, IV
9,126,317	B2	9/2015	Lawton et al.
9,131,835	B2	9/2015	Widenhouse et al.
9,131,940	B2	9/2015	Huitema et al.
9,131,950	B2	9/2015	Matthew
9,131,957	B2	9/2015	Skarbnik et al.
9,138,225	B2	9/2015	Huang et al.
9,138,226	B2	9/2015	Racenet et al.
9,144,455	B2	9/2015	Kennedy et al.
D740,414	S	10/2015	Katsura
D741,882	S	10/2015	Shmilov et al.
9,149,274	B2	10/2015	Spivey et al.
9,149,324	B2	10/2015	Huang et al.
9,149,325	B2	10/2015	Worrell et al.
9,153,994	B2	10/2015	Wood et al.
9,154,189	B2	10/2015	Von Novak et al.
9,161,753	B2	10/2015	Prior
9,161,769	B2	10/2015	Stoddard et al.
9,161,803	B2	10/2015	Yates et al.
9,161,807	B2	10/2015	Garrison
9,161,855	B2	10/2015	Rousseau et al.
9,164,271	B2	10/2015	Ebata et al.
9,167,960	B2	10/2015	Yamaguchi et al.
9,168,038	B2	10/2015	Shelton, IV et al.
9,168,039	B1	10/2015	Knodel
9,168,042	B2	10/2015	Milliman
9,168,054	B2	10/2015	Turner et al.
9,168,144	B2	10/2015	Rivin et al.
9,171,244	B2	10/2015	Endou et al.
9,179,832	B2	11/2015	Diolaiti
9,179,911	B2	11/2015	Morgan et al.
9,179,912	B2	11/2015	Yates et al.
9,180,223	B2	11/2015	Yu et al.
9,182,244	B2	11/2015	Luke et al.
9,186,046	B2	11/2015	Ramamurthy et al.
9,186,137	B2	11/2015	Farascioni et al.
9,186,140	B2	11/2015	Hiles et al.
9,186,142	B2	11/2015	Fanelli et al.
9,186,143	B2	11/2015	Timm et al.
9,186,148	B2	11/2015	Felder et al.
9,186,221	B2	11/2015	Burbank
9,192,376	B2	11/2015	Almodovar
9,192,380	B2	11/2015	(Tarinelli) Racenet et al.
9,192,384	B2	11/2015	Bettuchi
9,192,430	B2	11/2015	Rachlin et al.
9,192,434	B2	11/2015	Twomey et al.
9,193,045	B2	11/2015	Saur et al.
9,197,079	B2	11/2015	Yip et al.
D744,528	S	12/2015	Agrawal
D746,459	S	12/2015	Kaercher et al.
9,198,642	B2	12/2015	Storz
9,198,644	B2	12/2015	Balek et al.
9,198,661	B2	12/2015	Swensgard
9,198,662	B2	12/2015	Barton et al.
9,198,683	B2	12/2015	Friedman et al.
9,204,830	B2	12/2015	Zand et al.
9,204,877	B2	12/2015	Whitman et al.
9,204,878	B2	12/2015	Hall et al.
9,204,879	B2	12/2015	Shelton, IV
9,204,880	B2	12/2015	Baxter, III et al.
9,204,881	B2	12/2015	Penna
9,204,923	B2	12/2015	Manzo et al.
9,204,924	B2	12/2015	Marczyk et al.
9,211,120	B2	12/2015	Scheib et al.
9,211,121	B2	12/2015	Hall et al.
9,211,122	B2	12/2015	Hagerty et al.
9,216,013	B2	12/2015	Scirica et al.
9,216,019	B2	12/2015	Schmid et al.
9,216,020	B2	12/2015	Zhang et al.
9,216,030	B2	12/2015	Fan et al.
9,216,062	B2	12/2015	Duque et al.
9,220,500	B2	12/2015	Swayze et al.
9,220,501	B2	12/2015	Baxter, III et al.
9,220,502	B2	12/2015	Zemlok et al.
9,220,504	B2	12/2015	Viola et al.
9,220,508	B2	12/2015	Dannaher
9,220,559	B2	12/2015	Worrell et al.
9,220,570	B2	12/2015	Kim et al.
D746,854	S	1/2016	Shardlow et al.
9,226,686	B2	1/2016	Blair
9,226,750	B2	1/2016	Weir et al.
9,226,751	B2	1/2016	Shelton, IV et al.
9,226,754	B2	1/2016	D'Agostino et al.
9,226,760	B2	1/2016	Shelton, IV
9,226,761	B2	1/2016	Burbank
9,226,767	B2	1/2016	Stulen et al.
9,226,799	B2	1/2016	Lightcap et al.
9,232,941	B2	1/2016	Mandakolathur Vasudevan et al.
9,232,945	B2	1/2016	Zingman
9,232,979	B2	1/2016	Parihar et al.
9,233,610	B2	1/2016	Kim et al.
9,237,891	B2	1/2016	Shelton, IV
9,237,892	B2	1/2016	Hodgkinson
9,237,895	B2	1/2016	McCarthy et al.
9,237,900	B2	1/2016	Boudreaux et al.
9,237,921	B2	1/2016	Messerly et al.
9,239,064	B2	1/2016	Helbig et al.
9,240,740	B2	1/2016	Zeng et al.
9,241,711	B2	1/2016	Ivanko
9,241,712	B2	1/2016	Zemlok et al.
9,241,714	B2	1/2016	Timm et al.
9,241,716	B2	1/2016	Whitman
9,241,731	B2	1/2016	Boudreaux et al.
9,241,758	B2	1/2016	Franer et al.
9,244,524	B2	1/2016	Inoue et al.
D748,668	S	2/2016	Kim et al.
D749,128	S	2/2016	Perez et al.
D749,623	S	2/2016	Gray et al.
D750,122	S	2/2016	Shardlow et al.
D750,129	S	2/2016	Kwon
9,254,131	B2	2/2016	Soltz et al.

(56) **References Cited**

U.S. PATENT DOCUMENTS

9,254,170 B2 2/2016 Parihar et al.
9,259,265 B2 2/2016 Harris et al.
9,259,268 B2 2/2016 Behnke, II et al.
9,259,274 B2 2/2016 Prisco
9,259,275 B2 2/2016 Burbank
9,261,172 B2 2/2016 Solomon et al.
9,265,500 B2 2/2016 Sorrentino et al.
9,265,510 B2 2/2016 Dietzel et al.
9,265,516 B2 2/2016 Casey et al.
9,265,585 B2 2/2016 Wingardner et al.
9,271,718 B2 3/2016 Milad et al.
9,271,727 B2 3/2016 McGuckin, Jr. et al.
9,271,753 B2 3/2016 Butler et al.
9,271,799 B2 3/2016 Shelton, IV et al.
9,272,406 B2 3/2016 Aronhalt et al.
9,274,095 B2 3/2016 Humayun et al.
9,277,919 B2 3/2016 Timmer et al.
9,277,922 B2 3/2016 Carter et al.
9,277,969 B2 3/2016 Brannan et al.
9,282,962 B2 3/2016 Schmid et al.
9,282,963 B2 3/2016 Bryant
9,282,966 B2 3/2016 Shelton, IV et al.
9,282,974 B2 3/2016 Shelton, IV
9,283,028 B2 3/2016 Johnson
9,283,045 B2 3/2016 Rhee et al.
9,283,054 B2 3/2016 Morgan et al.
9,283,334 B2 3/2016 Mantell et al.
9,289,206 B2 3/2016 Hess et al.
9,289,207 B2 3/2016 Shelton, IV
9,289,210 B2 3/2016 Baxter, III et al.
9,289,211 B2 3/2016 Williams et al.
9,289,212 B2 3/2016 Shelton, IV et al.
9,289,225 B2 3/2016 Shelton, IV et al.
9,289,256 B2 3/2016 Shelton, IV et al.
9,293,757 B2 3/2016 Toussaint et al.
9,295,464 B2 3/2016 Shelton, IV et al.
9,295,465 B2 3/2016 Farascioni
9,295,466 B2 3/2016 Hodgkinson et al.
9,295,467 B2 3/2016 Scirica
9,295,468 B2 3/2016 Heinrich et al.
9,295,514 B2 3/2016 Shelton, IV et al.
9,295,522 B2 3/2016 Kostrzewski
9,295,565 B2 3/2016 McLean
9,295,784 B2 3/2016 Eggert et al.
D753,167 S 4/2016 Yu et al.
9,301,691 B2 4/2016 Hufnagel et al.
9,301,752 B2 4/2016 Mandakolathur Vasudevan et al.
9,301,753 B2 4/2016 Aldridge et al.
9,301,755 B2 4/2016 Shelton, IV et al.
9,301,759 B2 4/2016 Spivey et al.
9,301,811 B2 4/2016 Goldberg et al.
9,307,965 B2 4/2016 Ming et al.
9,307,986 B2 4/2016 Hall et al.
9,307,987 B2 4/2016 Swensgard et al.
9,307,988 B2 4/2016 Shelton, IV
9,307,989 B2 4/2016 Shelton, IV et al.
9,307,994 B2 4/2016 Gresham et al.
9,308,009 B2 4/2016 Madan et al.
9,308,011 B2 4/2016 Chao et al.
9,308,646 B2 4/2016 Lim et al.
9,313,915 B2 4/2016 Niu et al.
9,314,246 B2 4/2016 Shelton, IV et al.
9,314,247 B2 4/2016 Shelton, IV et al.
9,314,261 B2 4/2016 Bales, Jr. et al.
9,314,291 B2 4/2016 Schall et al.
9,314,339 B2 4/2016 Mansmann
9,314,908 B2 4/2016 Tanimoto et al.
9,320,518 B2 4/2016 Henderson et al.
9,320,520 B2 4/2016 Shelton, IV et al.
9,320,521 B2 4/2016 Shelton, IV et al.
9,320,523 B2 4/2016 Shelton, IV et al.
9,325,516 B2 4/2016 Pera et al.
D755,196 S 5/2016 Meyers et al.
D756,373 S 5/2016 Raskin et al.
D756,377 S 5/2016 Connolly et al.
D757,028 S 5/2016 Goldenberg et al.
9,326,767 B2 5/2016 Koch, Jr. et al.
9,326,768 B2 5/2016 Shelton, IV
9,326,769 B2 5/2016 Shelton, IV et al.
9,326,770 B2 5/2016 Shelton, IV et al.
9,326,771 B2 5/2016 Baxter, III et al.
9,326,788 B2 5/2016 Batross et al.
9,326,812 B2 5/2016 Waaler et al.
9,326,824 B2 5/2016 Inoue et al.
9,327,061 B2 5/2016 Govil et al.
9,331,721 B2 5/2016 Martinez Nuevo et al.
9,332,890 B2 5/2016 Ozawa
9,332,974 B2 5/2016 Henderson et al.
9,332,984 B2 5/2016 Weaner et al.
9,332,987 B2 5/2016 Leimbach et al.
9,333,040 B2 5/2016 Shellenberger et al.
9,333,082 B2 5/2016 Wei et al.
9,337,668 B2 5/2016 Yip
9,339,226 B2 5/2016 van der Walt et al.
9,339,342 B2 5/2016 Prisco et al.
9,345,477 B2 5/2016 Anim et al.
9,345,479 B2 5/2016 (Tarinelli) Racenet et al.
9,345,480 B2 5/2016 Hessler et al.
9,345,481 B2 5/2016 Hall et al.
9,345,503 B2 5/2016 Ishida et al.
9,351,726 B2 5/2016 Leimbach et al.
9,351,727 B2 5/2016 Leimbach et al.
9,351,728 B2 5/2016 Sniffin et al.
9,351,730 B2 5/2016 Schmid et al.
9,351,731 B2 5/2016 Carter et al.
9,351,732 B2 5/2016 Hodgkinson
9,352,071 B2 5/2016 Landgrebe et al.
D758,433 S 6/2016 Lee et al.
D759,063 S 6/2016 Chen
9,358,003 B2 6/2016 Hall et al.
9,358,004 B2 6/2016 Sniffin et al.
9,358,005 B2 6/2016 Shelton, IV et al.
9,358,015 B2 6/2016 Sorrentino et al.
9,358,031 B2 6/2016 Manzo
9,358,065 B2 6/2016 Ladtkow et al.
9,364,217 B2 6/2016 Kostrzewski et al.
9,364,219 B2 6/2016 Olson et al.
9,364,220 B2 6/2016 Williams
9,364,223 B2 6/2016 Scirica
9,364,226 B2 6/2016 Zemlok et al.
9,364,228 B2 6/2016 Straehnz et al.
9,364,229 B2 6/2016 D'Agostino et al.
9,364,230 B2 6/2016 Shelton, IV et al.
9,364,231 B2 6/2016 Wenchell
9,364,233 B2 6/2016 Alexander, III et al.
9,364,279 B2 6/2016 Houser et al.
9,368,991 B2 6/2016 Qahouq
9,370,341 B2 6/2016 Ceniccola et al.
9,370,358 B2 6/2016 Shelton, IV et al.
9,370,361 B2 6/2016 Viola et al.
9,370,362 B2 6/2016 Petty et al.
9,370,364 B2 6/2016 Smith et al.
9,370,400 B2 6/2016 Parihar
9,375,206 B2 6/2016 Vidal et al.
9,375,218 B2 6/2016 Wheeler et al.
9,375,230 B2 6/2016 Ross et al.
9,375,232 B2 6/2016 Hunt et al.
9,375,255 B2 6/2016 Houser et al.
D761,309 S 7/2016 Lee et al.
9,381,058 B2 7/2016 Houser et al.
9,383,881 B2 7/2016 Day et al.
9,385,640 B2 7/2016 Sun et al.
9,386,983 B2 7/2016 Swensgard et al.
9,386,984 B2 7/2016 Aronhalt et al.
9,386,985 B2 7/2016 Koch, Jr. et al.
9,386,988 B2 7/2016 Baxter, III et al.
9,387,003 B2 7/2016 Kaercher et al.
9,392,885 B2 7/2016 Vogler et al.
9,393,015 B2 7/2016 Laurent et al.
9,393,017 B2 7/2016 Flanagan et al.
9,393,018 B2 7/2016 Wang et al.
9,393,354 B2 7/2016 Freedman et al.
9,396,369 B1 7/2016 Whitehurst et al.
9,396,669 B2 7/2016 Karkanias et al.

(56) **References Cited**

U.S. PATENT DOCUMENTS

9,398,905	B2	7/2016	Martin
9,398,911	B2	7/2016	Auld
D763,277	S	8/2016	Ahmed et al.
D764,498	S	8/2016	Capela et al.
9,402,604	B2	8/2016	Williams et al.
9,402,625	B2	8/2016	Coleman et al.
9,402,626	B2	8/2016	Ortiz et al.
9,402,627	B2	8/2016	Stevenson et al.
9,402,629	B2	8/2016	Ehrenfels et al.
9,402,679	B2	8/2016	Ginnebaugh et al.
9,402,682	B2	8/2016	Worrell et al.
9,402,688	B2	8/2016	Min et al.
9,408,604	B2	8/2016	Shelton, IV et al.
9,408,605	B1	8/2016	Knodel et al.
9,408,606	B2	8/2016	Shelton, IV
9,408,622	B2	8/2016	Stulen et al.
9,411,370	B2	8/2016	Benni et al.
9,413,128	B2	8/2016	Tien et al.
9,414,838	B2	8/2016	Shelton, IV et al.
9,414,849	B2	8/2016	Nagashimada
9,414,880	B2	8/2016	Monson et al.
9,420,967	B2	8/2016	Zand et al.
9,421,003	B2	8/2016	Williams et al.
9,421,014	B2	8/2016	Ingmanson et al.
9,421,030	B2	8/2016	Cole et al.
9,421,060	B2	8/2016	Monson et al.
9,421,062	B2	8/2016	Houser et al.
9,421,682	B2	8/2016	McClaskey et al.
9,427,223	B2	8/2016	Park et al.
9,427,231	B2	8/2016	Racenet et al.
9,429,204	B2	8/2016	Stefan et al.
D767,624	S	9/2016	Lee et al.
9,433,411	B2	9/2016	Racenet et al.
9,433,414	B2	9/2016	Chen et al.
9,433,419	B2	9/2016	Gonzalez et al.
9,433,420	B2	9/2016	Hodgkinson
9,439,649	B2	9/2016	Shelton, IV et al.
9,439,650	B2	9/2016	McGuckin, Jr. et al.
9,439,651	B2	9/2016	Smith et al.
9,439,668	B2	9/2016	Timm et al.
9,445,808	B2	9/2016	Woodard, Jr. et al.
9,445,813	B2	9/2016	Shelton, IV et al.
9,445,816	B2	9/2016	Swayze et al.
9,445,817	B2	9/2016	Bettuchi
9,446,226	B2	9/2016	Zilberman
9,451,938	B2	9/2016	Overes et al.
9,451,958	B2	9/2016	Shelton, IV et al.
9,452,020	B2	9/2016	Griffiths et al.
D768,152	S	10/2016	Gutierrez et al.
D768,156	S	10/2016	Frincke
D768,167	S	10/2016	Jones et al.
D769,315	S	10/2016	Scotti
D769,930	S	10/2016	Agrawal
9,461,340	B2	10/2016	Li et al.
9,463,012	B2	10/2016	Bonutti et al.
9,463,040	B2	10/2016	Jeong et al.
9,463,260	B2	10/2016	Stopek
9,468,438	B2	10/2016	Baber et al.
9,468,447	B2	10/2016	Aman et al.
9,470,297	B2	10/2016	Aranyi et al.
9,471,969	B2	10/2016	Zeng et al.
9,474,506	B2	10/2016	Magnin et al.
9,474,513	B2	10/2016	Ishida et al.
9,474,523	B2	10/2016	Meade et al.
9,474,540	B2	10/2016	Stokes et al.
9,475,180	B2	10/2016	Eshleman et al.
9,477,649	B1	10/2016	Davidson et al.
D770,476	S	11/2016	Jitkoff et al.
D770,515	S	11/2016	Cho et al.
D771,116	S	11/2016	Dellinger et al.
D772,905	S	11/2016	Ingenlath
9,480,476	B2	11/2016	Aldridge et al.
9,480,492	B2	11/2016	Aranyi et al.
9,483,095	B2	11/2016	Tran et al.
9,486,186	B2	11/2016	Fiebig et al.
9,486,213	B2	11/2016	Altman et al.
9,486,214	B2	11/2016	Shelton, IV
9,486,215	B2	11/2016	Olson et al.
9,486,302	B2	11/2016	Boey et al.
9,488,197	B2	11/2016	Wi
9,492,146	B2	11/2016	Kostrzewski et al.
9,492,167	B2	11/2016	Shelton, IV et al.
9,492,170	B2	11/2016	Bear et al.
9,492,172	B2	11/2016	Weisshaupt et al.
9,492,189	B2	11/2016	Williams et al.
9,492,192	B2	11/2016	To et al.
9,492,237	B2	11/2016	Kang et al.
9,498,213	B2	11/2016	Marczyk et al.
9,498,219	B2	11/2016	Moore et al.
9,498,231	B2	11/2016	Haider et al.
9,504,455	B2	11/2016	Whitman et al.
9,504,483	B2	11/2016	Houser et al.
9,504,520	B2	11/2016	Worrell et al.
9,504,521	B2	11/2016	Deutmeyer et al.
9,504,528	B2	11/2016	Ivinson et al.
9,507,399	B2	11/2016	Chien
D774,547	S	12/2016	Capela et al.
D775,336	S	12/2016	Shelton, IV et al.
9,510,827	B2	12/2016	Kostrzewski
9,510,828	B2	12/2016	Yates et al.
9,510,830	B2	12/2016	Shelton, IV et al.
9,510,846	B2	12/2016	Sholev et al.
9,510,895	B2	12/2016	Houser et al.
9,510,925	B2	12/2016	Hotter et al.
9,515,366	B2	12/2016	Herbsommer et al.
9,517,063	B2	12/2016	Swayze et al.
9,517,065	B2	12/2016	Simms et al.
9,517,068	B2	12/2016	Shelton, IV et al.
9,517,326	B2	12/2016	Hinman et al.
9,521,996	B2	12/2016	Armstrong
9,522,003	B2	12/2016	Weir et al.
9,522,005	B2	12/2016	Williams et al.
9,522,014	B2	12/2016	Nishizawa et al.
9,522,029	B2	12/2016	Yates et al.
9,526,481	B2	12/2016	Storz et al.
9,526,499	B2	12/2016	Kostrzewski et al.
9,526,563	B2	12/2016	Twomey
9,526,564	B2	12/2016	Rusin
9,526,921	B2	12/2016	Kimball et al.
D776,683	S	1/2017	Gobinski et al.
D777,773	S	1/2017	Shi
9,532,783	B2	1/2017	Swayze et al.
9,539,060	B2	1/2017	Lightcap et al.
9,539,726	B2	1/2017	Simaan et al.
9,545,253	B2	1/2017	Worrell et al.
9,545,258	B2	1/2017	Smith et al.
9,549,732	B2	1/2017	Yates et al.
9,549,733	B2	1/2017	Knodel
9,549,735	B2	1/2017	Shelton, IV et al.
9,549,750	B2	1/2017	Shelton, IV et al.
9,554,794	B2	1/2017	Baber et al.
9,554,796	B2	1/2017	Kostrzewski
9,554,803	B2	1/2017	Smith et al.
9,554,812	B2	1/2017	Inkpen et al.
9,554,854	B2	1/2017	Yates et al.
9,559,624	B2	1/2017	Philipp
9,561,013	B2	2/2017	Tsuchiya
9,561,029	B2	2/2017	Scheib et al.
9,561,030	B2	2/2017	Zhang et al.
9,561,031	B2	2/2017	Heinrich et al.
9,561,032	B2	2/2017	Shelton, IV et al.
9,561,038	B2	2/2017	Shelton, IV et al.
9,561,045	B2	2/2017	Hinman et al.
9,561,072	B2	2/2017	Ko
9,561,082	B2	2/2017	Yen et al.
9,566,061	B2	2/2017	Aronhalt et al.
9,566,062	B2	2/2017	Boudreaux
9,566,064	B2	2/2017	Williams et al.
9,566,065	B2	2/2017	Knodel
9,566,067	B2	2/2017	Milliman et al.
9,572,552	B1	2/2017	Bodor et al.
9,572,574	B2	2/2017	Shelton, IV et al.
9,572,576	B2	2/2017	Hodgkinson et al.
9,572,577	B2	2/2017	Lloyd et al.

(56) **References Cited**

U.S. PATENT DOCUMENTS

9,572,592 B2 2/2017 Price et al.
9,574,644 B2 2/2017 Parihar
9,579,088 B2 2/2017 Farritor et al.
9,579,143 B2 2/2017 Ullrich et al.
9,579,158 B2 2/2017 Brianza et al.
D780,803 S 3/2017 Gill et al.
D781,879 S 3/2017 Butcher et al.
D782,530 S 3/2017 Paek et al.
9,585,550 B2 3/2017 Abel et al.
9,585,657 B2 3/2017 Shelton, IV et al.
9,585,658 B2 3/2017 Shelton, IV
9,585,659 B2 3/2017 Viola et al.
9,585,660 B2 3/2017 Laurent et al.
9,585,662 B2 3/2017 Shelton, IV et al.
9,585,663 B2 3/2017 Shelton, IV et al.
9,585,672 B2 3/2017 Bastia
9,590,433 B2 3/2017 Li
9,592,050 B2 3/2017 Schmid et al.
9,592,052 B2 3/2017 Shelton, IV
9,592,053 B2 3/2017 Shelton, IV et al.
9,592,054 B2 3/2017 Schmid et al.
9,597,073 B2 3/2017 Sorrentino et al.
9,597,075 B2 3/2017 Shelton, IV et al.
9,597,078 B2 3/2017 Scirica et al.
9,597,080 B2 3/2017 Milliman et al.
9,597,104 B2 3/2017 Nicholas et al.
9,597,143 B2 3/2017 Madan et al.
9,603,595 B2 3/2017 Shelton, IV et al.
9,603,598 B2 3/2017 Shelton, IV et al.
9,603,599 B2 3/2017 Miller et al.
9,603,991 B2 3/2017 Shelton, IV et al.
D783,658 S 4/2017 Hurst et al.
9,610,068 B2 4/2017 Kappel et al.
9,610,079 B2 4/2017 Kamei et al.
9,610,080 B2 4/2017 Whitfield et al.
9,610,412 B2 4/2017 Zemlok et al.
9,614,258 B2 4/2017 Takahashi et al.
9,615,826 B2 4/2017 Shelton, IV et al.
9,622,745 B2 4/2017 Ingmanson et al.
9,622,746 B2 4/2017 Simms et al.
9,629,623 B2 4/2017 Lytle, IV et al.
9,629,626 B2 4/2017 Soltz et al.
9,629,627 B2 4/2017 Kostrzewski et al.
9,629,628 B2 4/2017 Aranyi
9,629,629 B2 4/2017 Leimbach et al.
9,629,631 B2 4/2017 Nicholas et al.
9,629,632 B2 4/2017 Linder et al.
9,629,652 B2 4/2017 Mumaw et al.
9,629,814 B2 4/2017 Widenhouse et al.
D785,794 S 5/2017 Magno, Jr.
D786,280 S 5/2017 Ma
D786,896 S 5/2017 Kim et al.
D787,547 S 5/2017 Basargin et al.
D788,123 S 5/2017 Shan et al.
D788,140 S 5/2017 Hemsley et al.
9,636,091 B2 5/2017 Beardsley et al.
9,636,111 B2 5/2017 Wenchell
9,636,112 B2 5/2017 Penna et al.
9,636,113 B2 5/2017 Wenchell
9,636,850 B2 5/2017 Stopek et al.
9,641,122 B2 5/2017 Romanowich et al.
9,642,620 B2 5/2017 Baxter, III et al.
9,642,642 B2 5/2017 Lim
9,649,096 B2 5/2017 Sholev
9,649,110 B2 5/2017 Parihar et al.
9,649,111 B2 5/2017 Shelton, IV et al.
9,649,190 B2 5/2017 Mathies
9,651,032 B2 5/2017 Weaver et al.
9,655,613 B2 5/2017 Schaller
9,655,614 B2 5/2017 Swensgard et al.
9,655,615 B2 5/2017 Knodel et al.
9,655,616 B2 5/2017 Aranyi
9,655,624 B2 5/2017 Shelton, IV et al.
9,661,991 B2 5/2017 Glossop
9,662,108 B2 5/2017 Williams
9,662,110 B2 5/2017 Huang et al.
9,662,111 B2 5/2017 Holsten et al.
9,662,116 B2 5/2017 Smith et al.
9,662,130 B2 5/2017 Bartels et al.
9,662,131 B2 5/2017 Omori et al.
D788,792 S 6/2017 Alessandri et al.
D789,384 S 6/2017 Lin et al.
D790,570 S 6/2017 Butcher et al.
9,668,728 B2 6/2017 Williams et al.
9,668,729 B2 6/2017 Williams et al.
9,668,732 B2 6/2017 Patel et al.
9,668,733 B2 6/2017 Williams
9,668,734 B2 6/2017 Kostrzewski et al.
9,668,735 B2 6/2017 Beetel
9,675,344 B2 6/2017 Combrowski et al.
9,675,348 B2 6/2017 Smith et al.
9,675,351 B2 6/2017 Hodgkinson et al.
9,675,354 B2 6/2017 Weir et al.
9,675,355 B2 6/2017 Shelton, IV et al.
9,675,368 B2 6/2017 Guo et al.
9,675,372 B2 6/2017 Laurent et al.
9,675,375 B2 6/2017 Houser et al.
9,675,405 B2 6/2017 Trees et al.
9,675,819 B2 6/2017 Dunbar et al.
9,681,870 B2 6/2017 Baxter, III et al.
9,681,873 B2 6/2017 Smith et al.
9,681,884 B2 6/2017 Clem et al.
9,687,230 B2 6/2017 Leimbach et al.
9,687,231 B2 6/2017 Baxter, III et al.
9,687,232 B2 6/2017 Shelton, IV et al.
9,687,233 B2 6/2017 Fernandez et al.
9,687,236 B2 6/2017 Leimbach et al.
9,687,237 B2 6/2017 Schmid et al.
9,687,253 B2 6/2017 Detry et al.
9,689,466 B2 6/2017 Kanai et al.
9,690,362 B2 6/2017 Leimbach et al.
9,693,772 B2 7/2017 Ingmanson et al.
9,693,774 B2 7/2017 Gettinger et al.
9,693,775 B2 7/2017 Agarwal et al.
9,693,777 B2 7/2017 Schellin et al.
9,700,309 B2 7/2017 Jaworek et al.
9,700,310 B2 7/2017 Morgan et al.
9,700,312 B2 7/2017 Kostrzewski et al.
9,700,314 B2 7/2017 Marczyk
9,700,315 B2 7/2017 Chen et al.
9,700,317 B2 7/2017 Aronhalt et al.
9,700,318 B2 7/2017 Scirica et al.
9,700,319 B2 7/2017 Motooka et al.
9,700,320 B2 7/2017 Dinardo et al.
9,700,321 B2 7/2017 Shelton, IV et al.
9,700,334 B2 7/2017 Hinman et al.
9,700,381 B2 7/2017 Amat Girbau
9,702,823 B2 7/2017 Maher et al.
9,706,674 B2 7/2017 Collins et al.
9,706,981 B2 7/2017 Nicholas et al.
9,706,991 B2 7/2017 Hess et al.
9,706,993 B2 7/2017 Hessler et al.
9,707,003 B2 7/2017 Hoell, Jr. et al.
9,707,005 B2 7/2017 Strobl et al.
9,707,026 B2 7/2017 Malackowski et al.
9,707,033 B2 7/2017 Parihar et al.
9,707,043 B2 7/2017 Bozung
9,707,684 B2 7/2017 Ruiz Morales et al.
9,713,466 B2 7/2017 Kostrzewski
9,713,468 B2 7/2017 Harris et al.
9,713,470 B2 7/2017 Scirica et al.
9,713,474 B2 7/2017 Lorenz
D795,919 S 8/2017 Bischoff et al.
9,717,497 B2 8/2017 Zerkle et al.
9,717,498 B2 8/2017 Aranyi et al.
9,718,190 B2 8/2017 Larkin et al.
9,722,236 B2 8/2017 Sathrum
9,724,091 B2 8/2017 Shelton, IV et al.
9,724,092 B2 8/2017 Baxter, III et al.
9,724,094 B2 8/2017 Baber et al.
9,724,095 B2 8/2017 Gupta et al.
9,724,096 B2 8/2017 Thompson et al.
9,724,098 B2 8/2017 Baxter, III et al.
9,724,118 B2 8/2017 Schulte et al.

(56) **References Cited**

U.S. PATENT DOCUMENTS

9,724,163	B2	8/2017	Orban
9,730,692	B2	8/2017	Shelton, IV et al.
9,730,695	B2	8/2017	Leimbach et al.
9,730,697	B2	8/2017	Morgan et al.
9,730,717	B2	8/2017	Katsuki et al.
9,730,757	B2	8/2017	Brudniok
9,731,410	B2	8/2017	Hirabayashi et al.
9,733,663	B2	8/2017	Leimbach et al.
9,737,297	B2	8/2017	Racenet et al.
9,737,298	B2	8/2017	Isbell, Jr.
9,737,299	B2	8/2017	Yan
9,737,301	B2	8/2017	Baber et al.
9,737,302	B2	8/2017	Shelton, IV et al.
9,737,303	B2	8/2017	Shelton, IV et al.
9,737,323	B2	8/2017	Thapliyal et al.
9,737,365	B2	8/2017	Hegeman et al.
9,743,927	B2	8/2017	Whitman
9,743,928	B2	8/2017	Shelton, IV et al.
9,743,929	B2	8/2017	Leimbach et al.
D798,319	S	9/2017	Bergstrand et al.
9,750,498	B2	9/2017	Timm et al.
9,750,499	B2	9/2017	Leimbach et al.
9,750,501	B2	9/2017	Shelton, IV et al.
9,750,502	B2	9/2017	Scirica et al.
9,750,503	B2	9/2017	Milliman
9,750,639	B2	9/2017	Barnes et al.
9,751,176	B2	9/2017	McRoberts et al.
9,757,123	B2	9/2017	Giordano et al.
9,757,124	B2	9/2017	Schellin et al.
9,757,126	B2	9/2017	Cappola
9,757,128	B2	9/2017	Baber et al.
9,757,129	B2	9/2017	Williams
9,757,130	B2	9/2017	Shelton, IV
9,763,662	B2	9/2017	Shelton, IV et al.
9,763,668	B2	9/2017	Whitfield et al.
9,770,245	B2	9/2017	Swayze et al.
9,770,274	B2	9/2017	Pool et al.
D798,886	S	10/2017	Prophete et al.
D800,742	S	10/2017	Rhodes
D800,744	S	10/2017	Jitkoff et al.
D800,766	S	10/2017	Park et al.
D800,904	S	10/2017	Leimbach et al.
9,775,608	B2	10/2017	Aronhalt et al.
9,775,609	B2	10/2017	Shelton, IV et al.
9,775,610	B2	10/2017	Nicholas et al.
9,775,611	B2	10/2017	Kostrzewski
9,775,613	B2	10/2017	Shelton, IV et al.
9,775,614	B2	10/2017	Shelton, IV et al.
9,775,618	B2	10/2017	Bettuchi et al.
9,775,635	B2	10/2017	Take
9,775,678	B2	10/2017	Lohmeier
9,782,169	B2	10/2017	Kimsey et al.
9,782,170	B2	10/2017	Zemlok et al.
9,782,180	B2	10/2017	Smith et al.
9,782,187	B2	10/2017	Zergiebel et al.
9,782,193	B2	10/2017	Thistle
9,782,214	B2	10/2017	Houser et al.
9,788,834	B2	10/2017	Schmid et al.
9,788,835	B2	10/2017	Morgan et al.
9,788,836	B2	10/2017	Overmyer et al.
9,788,847	B2	10/2017	Jinno
9,788,851	B2	10/2017	Dannaher et al.
9,788,902	B2	10/2017	Inoue et al.
9,795,379	B2	10/2017	Leimbach et al.
9,795,380	B2	10/2017	Shelton, IV et al.
9,795,381	B2	10/2017	Shelton, IV
9,795,382	B2	10/2017	Shelton, IV
9,795,383	B2	10/2017	Aldridge et al.
9,795,384	B2	10/2017	Weaner et al.
9,797,486	B2	10/2017	Zergiebel et al.
9,801,626	B2	10/2017	Parihar et al.
9,801,627	B2	10/2017	Harris et al.
9,801,628	B2	10/2017	Harris et al.
9,801,634	B2	10/2017	Shelton, IV et al.
9,801,679	B2	10/2017	Trees et al.
9,802,033	B2	10/2017	Hibner et al.
9,804,618	B2	10/2017	Leimbach et al.
D803,234	S	11/2017	Day et al.
D803,235	S	11/2017	Markson et al.
D803,850	S	11/2017	Chang et al.
9,808,244	B2	11/2017	Leimbach et al.
9,808,246	B2	11/2017	Shelton, IV et al.
9,808,247	B2	11/2017	Shelton, IV et al.
9,808,248	B2	11/2017	Hoffman
9,808,249	B2	11/2017	Shelton, IV
9,814,460	B2	11/2017	Kimsey et al.
9,814,462	B2	11/2017	Woodard, Jr. et al.
9,814,463	B2	11/2017	Williams et al.
9,814,530	B2	11/2017	Weir et al.
9,814,561	B2	11/2017	Forsell
9,815,118	B1	11/2017	Schmitt et al.
9,820,445	B2	11/2017	Simpson et al.
9,820,737	B2	11/2017	Beardsley et al.
9,820,738	B2	11/2017	Lytle, IV et al.
9,820,741	B2	11/2017	Kostrzewski
9,820,768	B2	11/2017	Gee et al.
9,825,455	B2	11/2017	Sandhu et al.
9,826,976	B2	11/2017	Parihar et al.
9,826,977	B2	11/2017	Leimbach et al.
9,826,978	B2	11/2017	Shelton, IV et al.
9,829,698	B2	11/2017	Haraguchi et al.
D806,108	S	12/2017	Day
9,833,235	B2	12/2017	Penna et al.
9,833,236	B2	12/2017	Shelton, IV et al.
9,833,238	B2	12/2017	Baxter, III et al.
9,833,239	B2	12/2017	Yates et al.
9,833,241	B2	12/2017	Huitema et al.
9,833,242	B2	12/2017	Baxter, III et al.
9,839,420	B2	12/2017	Shelton, IV et al.
9,839,421	B2	12/2017	Zerkle et al.
9,839,422	B2	12/2017	Schellin et al.
9,839,423	B2	12/2017	Vendely et al.
9,839,427	B2	12/2017	Swayze et al.
9,839,428	B2	12/2017	Baxter, III et al.
9,839,429	B2	12/2017	Weisenburgh, II et al.
9,839,480	B2	12/2017	Pribanic et al.
9,839,481	B2	12/2017	Blumenkranz et al.
9,844,368	B2	12/2017	Boudreaux et al.
9,844,369	B2	12/2017	Huitema et al.
9,844,372	B2	12/2017	Shelton, IV et al.
9,844,373	B2	12/2017	Swayze et al.
9,844,374	B2	12/2017	Lytle, IV et al.
9,844,375	B2	12/2017	Overmyer et al.
9,844,376	B2	12/2017	Baxter, III et al.
9,844,379	B2	12/2017	Shelton, IV et al.
9,848,871	B2	12/2017	Harris et al.
9,848,873	B2	12/2017	Shelton, IV
9,848,875	B2	12/2017	Aronhalt et al.
9,848,877	B2	12/2017	Shelton, IV et al.
9,850,994	B2	12/2017	Schena
D808,989	S	1/2018	Ayvazian et al.
9,855,039	B2	1/2018	Racenet et al.
9,855,040	B2	1/2018	Kostrzewski
9,855,662	B2	1/2018	Ruiz Morales et al.
9,861,261	B2	1/2018	Shahinian
9,861,359	B2	1/2018	Shelton, IV et al.
9,861,361	B2	1/2018	Aronhalt et al.
9,861,362	B2	1/2018	Whitman et al.
9,861,366	B2	1/2018	Aranyi
9,861,382	B2	1/2018	Smith et al.
9,861,446	B2	1/2018	Lang
9,867,612	B2	1/2018	Parihar et al.
9,867,613	B2	1/2018	Marczyk et al.
9,867,615	B2	1/2018	Fanelli et al.
9,867,617	B2	1/2018	Ma
9,867,618	B2	1/2018	Hall et al.
9,867,620	B2	1/2018	Fischvogt et al.
9,868,198	B2	1/2018	Nicholas et al.
9,872,682	B2	1/2018	Hess et al.
9,872,683	B2	1/2018	Hopkins et al.
9,872,684	B2	1/2018	Hall et al.
9,872,722	B2	1/2018	Lech
9,877,721	B2	1/2018	Schellin et al.
9,877,722	B2	1/2018	Schellin et al.

(56) **References Cited**

U.S. PATENT DOCUMENTS

9,877,723	B2	1/2018	Hall et al.
9,877,776	B2	1/2018	Boudreaux
D810,099	S	2/2018	Riedel
9,883,843	B2	2/2018	Garlow
9,883,860	B2	2/2018	Leimbach et al.
9,883,861	B2	2/2018	Shelton, IV et al.
9,884,456	B2	2/2018	Schellin et al.
9,888,914	B2	2/2018	Martin et al.
9,888,919	B2	2/2018	Leimbach et al.
9,888,921	B2	2/2018	Williams et al.
9,888,924	B2	2/2018	Ebersole et al.
9,889,230	B2	2/2018	Bennett et al.
9,895,147	B2	2/2018	Shelton, IV
9,895,148	B2	2/2018	Shelton, IV et al.
9,895,813	B2	2/2018	Blumenkranz et al.
9,901,339	B2	2/2018	Farascioni
9,901,341	B2	2/2018	Kostrzewski
9,901,342	B2	2/2018	Shelton, IV et al.
9,901,344	B2	2/2018	Moore et al.
9,901,345	B2	2/2018	Moore et al.
9,901,346	B2	2/2018	Moore et al.
9,901,358	B2	2/2018	Faller et al.
9,901,406	B2	2/2018	State et al.
9,901,412	B2	2/2018	Lathrop et al.
D813,899	S	3/2018	Erant et al.
9,907,456	B2	3/2018	Miyoshi
9,907,552	B2	3/2018	Measamer et al.
9,907,553	B2	3/2018	Cole et al.
9,907,600	B2	3/2018	Stulen et al.
9,907,620	B2	3/2018	Shelton, IV et al.
9,913,641	B2	3/2018	Takemoto et al.
9,913,642	B2	3/2018	Leimbach et al.
9,913,644	B2	3/2018	McCuen
9,913,646	B2	3/2018	Shelton, IV
9,913,647	B2	3/2018	Weisenburgh, II et al.
9,913,648	B2	3/2018	Shelton, IV et al.
9,913,694	B2	3/2018	Brisson
9,913,733	B2	3/2018	Piron et al.
9,918,704	B2	3/2018	Shelton, IV et al.
9,918,714	B2	3/2018	Gibbons, Jr.
9,918,715	B2	3/2018	Menn
9,918,716	B2	3/2018	Baxter, III et al.
9,918,717	B2	3/2018	Czernik
9,918,730	B2	3/2018	Trees et al.
9,924,941	B2	3/2018	Burbank
9,924,942	B2	3/2018	Swayze et al.
9,924,943	B2	3/2018	Mohan Pinjala et al.
9,924,944	B2	3/2018	Shelton, IV et al.
9,924,945	B2	3/2018	Zheng et al.
9,924,946	B2	3/2018	Vendely et al.
9,924,947	B2	3/2018	Shelton, IV et al.
9,924,961	B2	3/2018	Shelton, IV et al.
9,931,106	B2	4/2018	Au et al.
9,931,116	B2	4/2018	Racenet et al.
9,931,117	B2	4/2018	Hathaway et al.
9,931,118	B2	4/2018	Shelton, IV et al.
9,931,120	B2	4/2018	Chen et al.
9,936,949	B2	4/2018	Measamer et al.
9,936,950	B2	4/2018	Shelton, IV et al.
9,936,951	B2	4/2018	Hufnagel et al.
9,936,952	B2	4/2018	Demmy
9,936,954	B2	4/2018	Shelton, IV et al.
9,937,626	B2	4/2018	Rockrohr
9,943,309	B2	4/2018	Shelton, IV et al.
9,943,310	B2	4/2018	Harris et al.
9,943,312	B2	4/2018	Posada et al.
9,949,754	B2	4/2018	Newhauser et al.
9,953,193	B2	4/2018	Butler et al.
D819,072	S	5/2018	Clediere
9,955,954	B2	5/2018	Destoumieux et al.
9,955,965	B2	5/2018	Chen et al.
9,955,966	B2	5/2018	Zergiebel
9,956,677	B2	5/2018	Baskar et al.
9,962,129	B2	5/2018	Jerebko et al.
9,962,157	B2	5/2018	Sapre
9,962,158	B2	5/2018	Hall et al.
9,962,159	B2	5/2018	Heinrich et al.
9,962,161	B2	5/2018	Scheib et al.
9,968,354	B2	5/2018	Shelton, IV et al.
9,968,355	B2	5/2018	Shelton, IV et al.
9,968,356	B2	5/2018	Shelton, IV et al.
9,968,397	B2	5/2018	Taylor et al.
9,974,529	B2	5/2018	Shelton, IV et al.
9,974,538	B2	5/2018	Baxter, III et al.
9,974,539	B2	5/2018	Yates et al.
9,974,541	B2	5/2018	Calderoni
9,974,542	B2	5/2018	Hodgkinson
9,980,713	B2	5/2018	Aronhalt et al.
9,980,724	B2	5/2018	Farascioni et al.
9,980,729	B2	5/2018	Moore et al.
9,980,740	B2	5/2018	Krause et al.
9,980,769	B2	5/2018	Trees et al.
D819,680	S	6/2018	Nguyen
D819,682	S	6/2018	Howard et al.
D819,684	S	6/2018	Dart
D820,307	S	6/2018	Jian et al.
D820,867	S	6/2018	Dickens et al.
9,987,000	B2	6/2018	Shelton, IV et al.
9,987,003	B2	6/2018	Timm et al.
9,987,006	B2	6/2018	Morgan et al.
9,987,008	B2	6/2018	Scirica et al.
9,987,095	B2	6/2018	Chowaniec et al.
9,987,097	B2	6/2018	van der Weide et al.
9,987,099	B2	6/2018	Chen et al.
9,993,248	B2	6/2018	Shelton, IV et al.
9,993,258	B2	6/2018	Shelton, IV et al.
9,993,284	B2	6/2018	Boudreaux
9,999,408	B2	6/2018	Boudreaux et al.
9,999,423	B2	6/2018	Schuckmann et al.
9,999,426	B2	6/2018	Moore et al.
9,999,431	B2	6/2018	Shelton, IV et al.
9,999,472	B2	6/2018	Weir et al.
10,004,497	B2	6/2018	Overmyer et al.
10,004,498	B2	6/2018	Morgan et al.
10,004,500	B2	6/2018	Shelton, IV et al.
10,004,501	B2	6/2018	Shelton, IV et al.
10,004,505	B2	6/2018	Moore et al.
10,004,506	B2	6/2018	Shelton, IV et al.
10,004,552	B1	6/2018	Kleyman et al.
D822,206	S	7/2018	Shelton, IV et al.
10,010,322	B2	7/2018	Shelton, IV et al.
10,010,324	B2	7/2018	Huitema et al.
10,010,395	B2	7/2018	Puckett et al.
10,013,049	B2	7/2018	Leimbach et al.
10,016,199	B2	7/2018	Baber et al.
10,016,656	B2	7/2018	Devor et al.
10,022,120	B2	7/2018	Martin et al.
10,022,123	B2	7/2018	Williams et al.
10,022,125	B2	7/2018	(Prommersberger) Stopek et al.
10,024,407	B2	7/2018	Aranyi et al.
10,028,742	B2	7/2018	Shelton, IV et al.
10,028,743	B2	7/2018	Shelton, IV et al.
10,028,744	B2	7/2018	Shelton, IV et al.
10,028,761	B2	7/2018	Leimbach et al.
10,029,108	B2	7/2018	Powers et al.
10,029,125	B2	7/2018	Shapiro et al.
10,034,344	B2	7/2018	Yoshida
10,034,668	B2	7/2018	Ebner
D826,405	S	8/2018	Shelton, IV et al.
10,039,440	B2	8/2018	Fenech et al.
10,039,529	B2	8/2018	Kerr et al.
10,039,532	B2	8/2018	Srinivas et al.
10,039,545	B2	8/2018	Sadowski et al.
10,041,822	B2	8/2018	Zemlok
10,045,769	B2	8/2018	Aronhalt et al.
10,045,776	B2	8/2018	Shelton, IV et al.
10,045,778	B2	8/2018	Yates et al.
10,045,779	B2	8/2018	Savage et al.
10,045,781	B2	8/2018	Cropper et al.
10,045,782	B2	8/2018	Murthy Aravalli
10,045,869	B2	8/2018	Forsell
10,046,904	B2	8/2018	Evans et al.
10,052,044	B2	8/2018	Shelton, IV et al.
10,052,099	B2	8/2018	Morgan et al.

(56) **References Cited**

U.S. PATENT DOCUMENTS

10,052,100	B2	8/2018	Morgan et al.
10,052,102	B2	8/2018	Baxter, III et al.
10,052,104	B2	8/2018	Shelton, IV et al.
10,052,164	B2	8/2018	Overmyer
10,058,317	B2	8/2018	Fan et al.
10,058,327	B2	8/2018	Weisenburgh, II et al.
10,058,373	B2	8/2018	Takashino et al.
10,058,395	B2	8/2018	Devengenzo et al.
10,058,963	B2	8/2018	Shelton, IV et al.
10,064,620	B2	9/2018	Gettinger et al.
10,064,621	B2	9/2018	Kerr et al.
10,064,622	B2	9/2018	Murthy Aravalli
10,064,624	B2	9/2018	Shelton, IV et al.
10,064,639	B2	9/2018	Ishida et al.
10,064,642	B2	9/2018	Marczyk et al.
10,064,649	B2	9/2018	Golebieski et al.
10,064,688	B2	9/2018	Shelton, IV et al.
10,070,861	B2	9/2018	Spivey et al.
10,070,863	B2	9/2018	Swayze et al.
10,071,452	B2	9/2018	Shelton, IV et al.
10,076,325	B2	9/2018	Huang et al.
10,076,326	B2	9/2018	Yates et al.
10,076,340	B2	9/2018	Belagali et al.
10,080,552	B2	9/2018	Nicholas et al.
D830,550	S	10/2018	Miller et al.
D831,209	S	10/2018	Huitema et al.
D831,676	S	10/2018	Park et al.
D832,301	S	10/2018	Smith
10,085,624	B2	10/2018	Isoda et al.
10,085,643	B2	10/2018	Bandic et al.
10,085,728	B2	10/2018	Jogasaki et al.
10,085,746	B2	10/2018	Fischvogt
10,085,748	B2	10/2018	Morgan et al.
10,085,749	B2	10/2018	Cappola et al.
10,085,750	B2	10/2018	Zergiebel et al.
10,085,751	B2	10/2018	Overmyer et al.
10,085,754	B2	10/2018	Sniffin et al.
10,085,806	B2	10/2018	Hagn et al.
10,092,290	B2	10/2018	Yigit et al.
10,092,292	B2	10/2018	Boudreaux et al.
10,098,635	B2	10/2018	Burbank
10,098,636	B2	10/2018	Shelton, IV et al.
10,098,640	B2	10/2018	Bertolero et al.
10,098,642	B2	10/2018	Baxter, III et al.
10,099,303	B2	10/2018	Yoshida et al.
10,101,861	B2	10/2018	Kiyoto
10,105,126	B2	10/2018	Sauer
10,105,128	B2	10/2018	Cooper et al.
10,105,136	B2	10/2018	Yates et al.
10,105,139	B2	10/2018	Yates et al.
10,105,140	B2	10/2018	Malinouskas et al.
10,105,142	B2	10/2018	Baxter, III et al.
10,105,149	B2	10/2018	Haider et al.
10,106,932	B2	10/2018	Anderson et al.
10,111,657	B2	10/2018	McCuen
10,111,658	B2	10/2018	Chowaniec et al.
10,111,660	B2	10/2018	Hemmann
10,111,665	B2	10/2018	Aranyi et al.
10,111,679	B2	10/2018	Baber et al.
10,111,698	B2	10/2018	Scheib et al.
10,111,702	B2	10/2018	Kostrzewski
D833,608	S	11/2018	Miller et al.
10,117,649	B2	11/2018	Baxter, III et al.
10,117,650	B2	11/2018	Nicholas et al.
10,117,652	B2	11/2018	Schmid et al.
10,117,653	B2	11/2018	Leimbach et al.
10,117,654	B2	11/2018	Ingmanson et al.
10,123,798	B2	11/2018	Baxter, III et al.
10,123,845	B2	11/2018	Yeung
10,124,493	B2	11/2018	Rothfuss et al.
10,130,352	B2	11/2018	Widenhouse et al.
10,130,359	B2	11/2018	Hess et al.
10,130,360	B2	11/2018	Olson et al.
10,130,361	B2	11/2018	Yates et al.
10,130,363	B2	11/2018	Huitema et al.
10,130,366	B2	11/2018	Shelton, IV et al.
10,130,367	B2	11/2018	Cappola et al.
10,130,382	B2	11/2018	Gladstone
10,130,738	B2	11/2018	Shelton, IV et al.
10,130,830	B2	11/2018	Miret Carceller et al.
10,133,248	B2	11/2018	Fitzsimmons et al.
10,135,242	B2	11/2018	Baber et al.
10,136,879	B2	11/2018	Ross et al.
10,136,887	B2	11/2018	Shelton, IV et al.
10,136,889	B2	11/2018	Shelton, IV et al.
10,136,890	B2	11/2018	Shelton, IV et al.
10,136,891	B2	11/2018	Shelton, IV et al.
10,136,949	B2	11/2018	Felder et al.
D835,659	S	12/2018	Anzures et al.
D836,124	S	12/2018	Fan
10,143,474	B2	12/2018	Bucciaglia et al.
10,146,423	B1	12/2018	Reed et al.
10,149,679	B2	12/2018	Shelton, IV et al.
10,149,680	B2	12/2018	Parihar et al.
10,149,682	B2	12/2018	Shelton, IV et al.
10,149,683	B2	12/2018	Smith et al.
10,149,712	B2	12/2018	Manwaring et al.
10,152,789	B2	12/2018	Carnes et al.
10,154,841	B2	12/2018	Weaner et al.
10,159,481	B2	12/2018	Whitman et al.
10,159,482	B2	12/2018	Swayze et al.
10,159,483	B2	12/2018	Beckman et al.
10,159,506	B2	12/2018	Boudreaux et al.
10,161,816	B2	12/2018	Jackson et al.
10,163,065	B1	12/2018	Koski et al.
10,163,589	B2	12/2018	Zergiebel et al.
10,164,466	B2	12/2018	Calderoni
D837,244	S	1/2019	Kuo et al.
D837,245	S	1/2019	Kuo et al.
10,166,023	B2	1/2019	Vendely et al.
10,166,025	B2	1/2019	Leimbach et al.
10,166,026	B2	1/2019	Shelton, IV et al.
10,172,611	B2	1/2019	Shelton, IV et al.
10,172,615	B2	1/2019	Marczyk et al.
10,172,616	B2	1/2019	Murray et al.
10,172,617	B2	1/2019	Shelton, IV et al.
10,172,618	B2	1/2019	Shelton, IV et al.
10,172,619	B2	1/2019	Harris et al.
10,172,620	B2	1/2019	Harris et al.
10,172,636	B2	1/2019	Stulen et al.
10,172,669	B2	1/2019	Felder et al.
10,175,127	B2	1/2019	Collins et al.
10,178,992	B2	1/2019	Wise et al.
10,180,463	B2	1/2019	Beckman et al.
10,182,813	B2	1/2019	Leimbach et al.
10,182,815	B2	1/2019	Williams et al.
10,182,816	B2	1/2019	Shelton, IV et al.
10,182,818	B2	1/2019	Hensel et al.
10,182,819	B2	1/2019	Shelton, IV
10,182,868	B2	1/2019	Meier et al.
10,188,385	B2	1/2019	Kerr et al.
10,188,389	B2	1/2019	Vendely et al.
10,188,393	B2	1/2019	Smith et al.
10,188,394	B2	1/2019	Shelton, IV et al.
10,190,888	B2	1/2019	Hryb et al.
D839,900	S	2/2019	Gan
D841,667	S	2/2019	Coren
10,194,801	B2	2/2019	Elhawary et al.
10,194,904	B2	2/2019	Viola et al.
10,194,907	B2	2/2019	Marczyk et al.
10,194,908	B2	2/2019	Duque et al.
10,194,910	B2	2/2019	Shelton, IV et al.
10,194,911	B2	2/2019	Miller et al.
10,194,912	B2	2/2019	Scheib et al.
10,194,913	B2	2/2019	Nalagatla et al.
10,194,976	B2	2/2019	Boudreaux
10,194,992	B2	2/2019	Robinson
10,201,348	B2	2/2019	Scheib et al.
10,201,349	B2	2/2019	Leimbach et al.
10,201,363	B2	2/2019	Shelton, IV
10,201,364	B2	2/2019	Leimbach et al.
10,201,365	B2	2/2019	Boudreaux et al.
10,201,381	B2	2/2019	Zergiebel et al.
10,206,605	B2	2/2019	Shelton, IV et al.

(56) **References Cited**

U.S. PATENT DOCUMENTS

10,206,676	B2	2/2019	Shelton, IV
10,206,677	B2	2/2019	Harris et al.
10,206,678	B2	2/2019	Shelton, IV et al.
10,206,748	B2	2/2019	Burbank
10,210,244	B1	2/2019	Branavan et al.
10,211,586	B2	2/2019	Adams et al.
10,213,198	B2	2/2019	Aronhalt et al.
10,213,201	B2	2/2019	Shelton, IV et al.
10,213,202	B2	2/2019	Flanagan et al.
10,213,203	B2	2/2019	Swayze et al.
10,213,204	B2	2/2019	Aranyi et al.
10,213,262	B2	2/2019	Shelton, IV et al.
D842,328	S	3/2019	Jian et al.
10,219,811	B2	3/2019	Haider et al.
10,219,832	B2	3/2019	Bagwell et al.
10,220,522	B2	3/2019	Rockrohr
10,226,239	B2	3/2019	Nicholas et al.
10,226,249	B2	3/2019	Jaworek et al.
10,226,250	B2	3/2019	Beckman et al.
10,226,251	B2	3/2019	Scheib et al.
10,226,274	B2	3/2019	Worrell et al.
10,231,634	B2	3/2019	Zand et al.
10,231,653	B2	3/2019	Bohm et al.
10,231,734	B2	3/2019	Thompson et al.
10,231,794	B2	3/2019	Shelton, IV et al.
10,238,385	B2	3/2019	Yates et al.
10,238,386	B2	3/2019	Overmyer et al.
10,238,387	B2	3/2019	Yates et al.
10,238,389	B2	3/2019	Yates et al.
10,238,390	B2	3/2019	Harris et al.
10,238,391	B2	3/2019	Leimbach et al.
D844,666	S	4/2019	Espeleta et al.
D844,667	S	4/2019	Espeleta et al.
D845,342	S	4/2019	Espeleta et al.
D847,199	S	4/2019	Whitmore
10,244,991	B2	4/2019	Shademan et al.
10,245,027	B2	4/2019	Shelton, IV et al.
10,245,028	B2	4/2019	Shelton, IV et al.
10,245,029	B2	4/2019	Hunter et al.
10,245,030	B2	4/2019	Hunter et al.
10,245,032	B2	4/2019	Shelton, IV
10,245,033	B2	4/2019	Overmyer et al.
10,245,034	B2	4/2019	Shelton, IV et al.
10,245,035	B2	4/2019	Swayze et al.
10,245,038	B2	4/2019	Hopkins et al.
10,245,058	B2	4/2019	Omori et al.
10,251,645	B2	4/2019	Kostrzewski
10,251,648	B2	4/2019	Harris et al.
10,251,649	B2	4/2019	Schellin et al.
10,251,725	B2	4/2019	Valentine et al.
10,258,322	B2	4/2019	Fanton et al.
10,258,330	B2	4/2019	Shelton, IV et al.
10,258,331	B2	4/2019	Shelton, IV et al.
10,258,332	B2	4/2019	Schmid et al.
10,258,333	B2	4/2019	Shelton, IV et al.
10,258,336	B2	4/2019	Baxter, III et al.
10,258,363	B2	4/2019	Worrell et al.
10,258,418	B2	4/2019	Shelton, IV et al.
10,264,797	B2	4/2019	Zhang et al.
10,265,065	B2	4/2019	Shelton, IV et al.
10,265,067	B2	4/2019	Yates et al.
10,265,068	B2	4/2019	Harris et al.
10,265,072	B2	4/2019	Shelton, IV et al.
10,265,073	B2	4/2019	Scheib et al.
10,265,074	B2	4/2019	Shelton, IV et al.
10,265,090	B2	4/2019	Ingmanson et al.
10,271,840	B2	4/2019	Sapre
10,271,844	B2	4/2019	Valentine et al.
10,271,845	B2	4/2019	Shelton, IV
10,271,846	B2	4/2019	Shelton, IV et al.
10,271,847	B2	4/2019	Racenet et al.
10,271,849	B2	4/2019	Vendely et al.
10,271,851	B2	4/2019	Shelton, IV et al.
D847,989	S	5/2019	Shelton, IV et al.
D848,473	S	5/2019	Zhu et al.
D849,046	S	5/2019	Kuo et al.
10,278,696	B2	5/2019	Gurumurthy et al.
10,278,697	B2	5/2019	Shelton, IV et al.
10,278,702	B2	5/2019	Shelton, IV et al.
10,278,703	B2	5/2019	Nativ et al.
10,278,707	B2	5/2019	Thompson et al.
10,278,722	B2	5/2019	Shelton, IV et al.
10,278,780	B2	5/2019	Shelton, IV
10,285,694	B2	5/2019	Viola et al.
10,285,695	B2	5/2019	Jaworek et al.
10,285,699	B2	5/2019	Vendely et al.
10,285,700	B2	5/2019	Scheib
10,285,705	B2	5/2019	Shelton, IV et al.
10,285,724	B2	5/2019	Faller et al.
10,285,750	B2	5/2019	Coulson et al.
10,292,701	B2	5/2019	Scheib et al.
10,292,704	B2	5/2019	Harris et al.
10,292,707	B2	5/2019	Shelton, IV et al.
10,293,100	B2	5/2019	Shelton, IV et al.
10,293,553	B2	5/2019	Racenet et al.
10,299,787	B2	5/2019	Shelton, IV
10,299,788	B2	5/2019	Heinrich et al.
10,299,789	B2	5/2019	Marczyk et al.
10,299,790	B2	5/2019	Beardsley
10,299,792	B2	5/2019	Huitema et al.
10,299,817	B2	5/2019	Shelton, IV et al.
10,299,818	B2	5/2019	Riva
10,299,878	B2	5/2019	Shelton, IV et al.
10,303,851	B2	5/2019	Nguyen et al.
D850,617	S	6/2019	Shelton, IV et al.
D851,676	S	6/2019	Foss et al.
D851,762	S	6/2019	Shelton, IV et al.
10,307,159	B2	6/2019	Harris et al.
10,307,160	B2	6/2019	Vendely et al.
10,307,161	B2	6/2019	Jankowski
10,307,163	B2	6/2019	Moore et al.
10,307,170	B2	6/2019	Parfett et al.
10,307,202	B2	6/2019	Smith et al.
10,314,559	B2	6/2019	Razzaque et al.
10,314,577	B2	6/2019	Laurent et al.
10,314,578	B2	6/2019	Leimbach et al.
10,314,579	B2	6/2019	Chowaniec et al.
10,314,580	B2	6/2019	Scheib et al.
10,314,582	B2	6/2019	Shelton, IV et al.
10,314,584	B2	6/2019	Scirica et al.
10,314,587	B2	6/2019	Harris et al.
10,314,588	B2	6/2019	Turner et al.
10,314,589	B2	6/2019	Shelton, IV et al.
10,314,590	B2	6/2019	Shelton, IV et al.
10,315,566	B2	6/2019	Choi et al.
10,321,907	B2	6/2019	Shelton, IV et al.
10,321,909	B2	6/2019	Shelton, IV et al.
10,321,927	B2	6/2019	Hinman
10,327,743	B2	6/2019	St. Goar et al.
10,327,764	B2	6/2019	Harris et al.
10,327,765	B2	6/2019	Timm et al.
10,327,767	B2	6/2019	Shelton, IV et al.
10,327,769	B2	6/2019	Overmyer et al.
10,327,776	B2	6/2019	Harris et al.
10,327,777	B2	6/2019	Harris et al.
D854,032	S	7/2019	Jones et al.
D854,151	S	7/2019	Shelton, IV et al.
10,335,144	B2	7/2019	Shelton, IV et al.
10,335,145	B2	7/2019	Harris et al.
10,335,147	B2	7/2019	Rector et al.
10,335,148	B2	7/2019	Shelton, IV et al.
10,335,149	B2	7/2019	Baxter, III et al.
10,335,150	B2	7/2019	Shelton, IV
10,335,151	B2	7/2019	Shelton, IV et al.
10,337,148	B2	7/2019	Rouse et al.
10,342,533	B2	7/2019	Shelton, IV et al.
10,342,535	B2	7/2019	Scheib et al.
10,342,541	B2	7/2019	Shelton, IV et al.
10,342,543	B2	7/2019	Shelton, IV et al.
10,342,623	B2	7/2019	Huelman et al.
10,349,937	B2	7/2019	Williams
10,349,939	B2	7/2019	Shelton, IV et al.
10,349,941	B2	7/2019	Marczyk et al.
10,349,963	B2	7/2019	Fiksen et al.

(56) **References Cited**

U.S. PATENT DOCUMENTS

10,350,016	B2	7/2019	Burbank et al.
10,357,246	B2	7/2019	Shelton, IV et al.
10,357,247	B2	7/2019	Shelton, IV et al.
10,357,248	B2	7/2019	Dalessandro et al.
10,357,252	B2	7/2019	Harris et al.
10,363,031	B2	7/2019	Alexander, III et al.
10,363,033	B2	7/2019	Timm et al.
10,363,036	B2	7/2019	Yates et al.
10,363,037	B2	7/2019	Aronhalt et al.
D855,634	S	8/2019	Kim
D856,359	S	8/2019	Huang et al.
10,368,838	B2	8/2019	Williams et al.
10,368,861	B2	8/2019	Baxter, III et al.
10,368,863	B2	8/2019	Timm et al.
10,368,864	B2	8/2019	Harris et al.
10,368,865	B2	8/2019	Harris et al.
10,368,866	B2	8/2019	Wang et al.
10,368,867	B2	8/2019	Harris et al.
10,368,892	B2	8/2019	Stulen et al.
10,374,544	B2	8/2019	Yokoyama et al.
10,376,263	B2	8/2019	Morgan et al.
10,383,626	B2	8/2019	Soltz
10,383,628	B2	8/2019	Kang et al.
10,383,629	B2	8/2019	Ross et al.
10,383,630	B2	8/2019	Shelton, IV et al.
10,383,631	B2	8/2019	Collings et al.
10,383,633	B2	8/2019	Shelton, IV et al.
10,383,634	B2	8/2019	Shelton, IV et al.
10,390,823	B2	8/2019	Shelton, IV et al.
10,390,825	B2	8/2019	Shelton, IV et al.
10,390,828	B2	8/2019	Vendely et al.
10,390,829	B2	8/2019	Eckert et al.
10,390,830	B2	8/2019	Schulz
10,390,841	B2	8/2019	Shelton, IV et al.
10,390,897	B2	8/2019	Kostrzewski
D859,466	S	9/2019	Okada et al.
D860,219	S	9/2019	Rasmussen et al.
D861,035	S	9/2019	Park et al.
10,398,433	B2	9/2019	Boudreaux et al.
10,398,434	B2	9/2019	Shelton, IV et al.
10,398,436	B2	9/2019	Shelton, IV et al.
10,398,460	B2	9/2019	Overmyer
10,404,136	B2	9/2019	Oktavec et al.
10,405,854	B2	9/2019	Schmid et al.
10,405,857	B2	9/2019	Shelton, IV et al.
10,405,859	B2	9/2019	Harris et al.
10,405,863	B2	9/2019	Wise et al.
10,405,914	B2	9/2019	Manwaring et al.
10,405,932	B2	9/2019	Overmyer
10,405,937	B2	9/2019	Black et al.
10,413,155	B2	9/2019	Inoue
10,413,291	B2	9/2019	Worthington et al.
10,413,293	B2	9/2019	Shelton, IV et al.
10,413,294	B2	9/2019	Shelton, IV et al.
10,413,297	B2	9/2019	Harris et al.
10,413,370	B2	9/2019	Yates et al.
10,413,373	B2	9/2019	Yates et al.
10,420,548	B2	9/2019	Whitman et al.
10,420,549	B2	9/2019	Yates et al.
10,420,550	B2	9/2019	Shelton, IV
10,420,551	B2	9/2019	Calderoni
10,420,552	B2	9/2019	Shelton, IV et al.
10,420,553	B2	9/2019	Shelton, IV et al.
10,420,554	B2	9/2019	Collings et al.
10,420,555	B2	9/2019	Shelton, IV et al.
10,420,558	B2	9/2019	Nalagatla et al.
10,420,559	B2	9/2019	Marczyk et al.
10,420,560	B2	9/2019	Shelton, IV et al.
10,420,561	B2	9/2019	Shelton, IV et al.
10,420,577	B2	9/2019	Chowaniec et al.
D861,707	S	10/2019	Yang
D862,518	S	10/2019	Niven et al.
D863,343	S	10/2019	Mazlish et al.
D864,388	S	10/2019	Barber
D865,174	S	10/2019	Auld et al.
D865,175	S	10/2019	Widenhouse et al.
10,426,463	B2	10/2019	Shelton, IV et al.
10,426,466	B2	10/2019	Contini et al.
10,426,467	B2	10/2019	Miller et al.
10,426,468	B2	10/2019	Contini et al.
10,426,469	B2	10/2019	Shelton, IV et al.
10,426,471	B2	10/2019	Shelton, IV et al.
10,426,476	B2	10/2019	Harris et al.
10,426,477	B2	10/2019	Harris et al.
10,426,478	B2	10/2019	Shelton, IV et al.
10,426,481	B2	10/2019	Aronhalt et al.
10,426,555	B2	10/2019	Crowley et al.
10,433,837	B2	10/2019	Worthington et al.
10,433,839	B2	10/2019	Scheib et al.
10,433,840	B2	10/2019	Shelton, IV et al.
10,433,842	B2	10/2019	Amariglio et al.
10,433,844	B2	10/2019	Shelton, IV et al.
10,433,845	B2	10/2019	Baxter, III et al.
10,433,846	B2	10/2019	Vendely et al.
10,433,849	B2	10/2019	Shelton, IV et al.
10,433,918	B2	10/2019	Shelton, IV et al.
10,441,279	B2	10/2019	Shelton, IV et al.
10,441,280	B2	10/2019	Timm et al.
10,441,281	B2	10/2019	Shelton, IV et al.
10,441,285	B2	10/2019	Shelton, IV et al.
10,441,286	B2	10/2019	Shelton, IV et al.
10,441,345	B2	10/2019	Aldridge et al.
10,441,369	B2	10/2019	Shelton, IV et al.
10,448,948	B2	10/2019	Shelton, IV et al.
10,448,950	B2	10/2019	Shelton, IV et al.
10,448,952	B2	10/2019	Shelton, IV et al.
10,456,122	B2	10/2019	Koltz et al.
10,456,132	B2	10/2019	Gettinger et al.
10,456,133	B2	10/2019	Yates et al.
10,456,137	B2	10/2019	Vendely et al.
10,456,140	B2	10/2019	Shelton, IV et al.
D865,796	S	11/2019	Xu et al.
10,463,367	B2	11/2019	Kostrzewski et al.
10,463,369	B2	11/2019	Shelton, IV et al.
10,463,370	B2	11/2019	Yates et al.
10,463,371	B2	11/2019	Kostrzewski
10,463,372	B2	11/2019	Shelton, IV et al.
10,463,373	B2	11/2019	Mozdzierz et al.
10,463,382	B2	11/2019	Ingmanson et al.
10,463,383	B2	11/2019	Shelton, IV et al.
10,463,384	B2	11/2019	Shelton, IV et al.
10,470,762	B2	11/2019	Leimbach et al.
10,470,763	B2	11/2019	Yates et al.
10,470,764	B2	11/2019	Baxter, III et al.
10,470,767	B2	11/2019	Gleiman et al.
10,470,768	B2	11/2019	Harris et al.
10,470,769	B2	11/2019	Shelton, IV et al.
10,471,282	B2	11/2019	Kirk et al.
10,471,576	B2	11/2019	Totsu
10,471,607	B2	11/2019	Butt et al.
10,478,181	B2	11/2019	Shelton, IV et al.
10,478,182	B2	11/2019	Taylor
10,478,185	B2	11/2019	Nicholas
10,478,187	B2	11/2019	Shelton, IV et al.
10,478,188	B2	11/2019	Harris et al.
10,478,189	B2	11/2019	Bear et al.
10,478,190	B2	11/2019	Miller et al.
10,478,207	B2	11/2019	Lathrop
10,482,292	B2	11/2019	Clouser et al.
10,485,536	B2	11/2019	Ming et al.
10,485,537	B2	11/2019	Yates et al.
10,485,539	B2	11/2019	Shelton, IV et al.
10,485,541	B2	11/2019	Shelton, IV et al.
10,485,542	B2	11/2019	Shelton, IV et al.
10,485,543	B2	11/2019	Shelton, IV et al.
10,485,546	B2	11/2019	Shelton, IV et al.
10,485,547	B2	11/2019	Shelton, IV et al.
D869,655	S	12/2019	Shelton, IV et al.
D870,742	S	12/2019	Cornell
10,492,783	B2	12/2019	Shelton, IV et al.
10,492,785	B2	12/2019	Overmyer et al.
10,492,787	B2	12/2019	Smith et al.
10,492,814	B2	12/2019	Snow et al.
10,492,847	B2	12/2019	Godara et al.

(56) **References Cited**

U.S. PATENT DOCUMENTS

10,492,851	B2	12/2019	Hughett, Sr. et al.
10,498,269	B2	12/2019	Zemlok et al.
10,499,890	B2	12/2019	Shelton, IV et al.
10,499,914	B2	12/2019	Huang et al.
10,499,917	B2	12/2019	Scheib et al.
10,499,918	B2	12/2019	Schellin et al.
10,500,000	B2	12/2019	Swayze et al.
10,500,004	B2	12/2019	Hanuschik et al.
10,500,309	B2	12/2019	Shah et al.
10,507,034	B2	12/2019	Timm
10,508,720	B2	12/2019	Nicholas
10,512,461	B2	12/2019	Gupta et al.
10,512,462	B2	12/2019	Felder et al.
10,512,464	B2	12/2019	Park et al.
10,517,590	B2	12/2019	Giordano et al.
10,517,592	B2	12/2019	Shelton, IV et al.
10,517,594	B2	12/2019	Shelton, IV et al.
10,517,595	B2	12/2019	Hunter et al.
10,517,596	B2	12/2019	Hunter et al.
10,517,599	B2	12/2019	Baxter, III et al.
10,517,682	B2	12/2019	Giordano et al.
10,524,784	B2	1/2020	Kostrzewski
10,524,787	B2	1/2020	Shelton, IV et al.
10,524,788	B2	1/2020	Vendely et al.
10,524,789	B2	1/2020	Swayze et al.
10,524,790	B2	1/2020	Shelton, IV et al.
10,524,795	B2	1/2020	Nalagatla et al.
10,524,870	B2	1/2020	Saraliev et al.
10,531,874	B2	1/2020	Morgan et al.
10,531,887	B2	1/2020	Shelton, IV et al.
10,537,324	B2	1/2020	Shelton, IV et al.
10,537,325	B2	1/2020	Bakos et al.
10,537,351	B2	1/2020	Shelton, IV et al.
10,542,908	B2	1/2020	Mei et al.
10,542,974	B2	1/2020	Yates et al.
10,542,976	B2	1/2020	Calderoni et al.
10,542,978	B2	1/2020	Chowaniec et al.
10,542,979	B2	1/2020	Shelton, IV et al.
10,542,982	B2	1/2020	Beckman et al.
10,542,985	B2	1/2020	Zhan et al.
10,542,988	B2	1/2020	Schellin et al.
10,542,991	B2	1/2020	Shelton, IV et al.
10,548,504	B2	2/2020	Shelton, IV et al.
10,548,593	B2	2/2020	Shelton, IV et al.
10,548,600	B2	2/2020	Shelton, IV et al.
10,548,673	B2	2/2020	Harris et al.
10,561,412	B2	2/2020	Bookbinder et al.
10,561,418	B2	2/2020	Richard et al.
10,561,419	B2	2/2020	Beardsley
10,561,420	B2	2/2020	Harris et al.
10,561,422	B2	2/2020	Schellin et al.
10,561,432	B2	2/2020	Estrella et al.
10,561,474	B2	2/2020	Adams et al.
10,562,160	B2	2/2020	Iwata et al.
10,568,493	B2	2/2020	Blase et al.
10,568,621	B2	2/2020	Shelton, IV et al.
10,568,624	B2	2/2020	Shelton, IV et al.
10,568,625	B2	2/2020	Harris et al.
10,568,626	B2	2/2020	Shelton, IV et al.
10,568,629	B2	2/2020	Shelton, IV et al.
10,568,632	B2	2/2020	Miller et al.
10,568,652	B2	2/2020	Hess et al.
10,569,071	B2	2/2020	Harris et al.
D879,808	S	3/2020	Harris et al.
D879,809	S	3/2020	Harris et al.
10,575,868	B2	3/2020	Hall et al.
10,580,320	B2	3/2020	Kamiguchi et al.
10,582,928	B2	3/2020	Hunter et al.
10,588,231	B2	3/2020	Sgroi, Jr. et al.
10,588,623	B2	3/2020	Schmid et al.
10,588,625	B2	3/2020	Weaner et al.
10,588,626	B2	3/2020	Overmyer et al.
10,588,629	B2	3/2020	Malinouskas et al.
10,588,630	B2	3/2020	Shelton, IV et al.
10,588,631	B2	3/2020	Shelton, IV et al.
10,588,632	B2	3/2020	Shelton, IV et al.
10,588,633	B2	3/2020	Shelton, IV et al.
10,589,410	B2	3/2020	Aho
10,595,835	B2	3/2020	Kerr et al.
10,595,862	B2	3/2020	Shelton, IV et al.
10,595,882	B2	3/2020	Parfett et al.
10,595,887	B2	3/2020	Shelton, IV et al.
10,595,929	B2	3/2020	Boudreaux et al.
10,603,036	B2	3/2020	Hunter et al.
10,603,039	B2	3/2020	Vendely et al.
10,603,041	B2	3/2020	Miller et al.
10,603,117	B2	3/2020	Schings et al.
10,603,128	B2	3/2020	Zergiebel et al.
D882,783	S	4/2020	Shelton, IV et al.
10,610,224	B2	4/2020	Shelton, IV et al.
10,610,225	B2	4/2020	Reed et al.
10,610,236	B2	4/2020	Baril
10,610,313	B2	4/2020	Bailey et al.
10,610,346	B2	4/2020	Schwartz
10,617,411	B2	4/2020	Williams
10,617,412	B2	4/2020	Shelton, IV et al.
10,617,413	B2	4/2020	Shelton, IV et al.
10,617,414	B2	4/2020	Shelton, IV et al.
10,617,416	B2	4/2020	Leimbach et al.
10,617,417	B2	4/2020	Baxter, III et al.
10,617,418	B2	4/2020	Barton et al.
10,617,420	B2	4/2020	Shelton, IV et al.
10,617,438	B2	4/2020	O'Keefe et al.
10,624,616	B2	4/2020	Mukherjee et al.
10,624,630	B2	4/2020	Deville et al.
10,624,633	B2	4/2020	Shelton, IV et al.
10,624,634	B2	4/2020	Shelton, IV et al.
10,624,635	B2	4/2020	Harris et al.
10,624,709	B2	4/2020	Remm
10,624,861	B2	4/2020	Widenhouse et al.
10,625,062	B2	4/2020	Matlock et al.
10,631,857	B2	4/2020	Kostrzewski
10,631,858	B2	4/2020	Burbank
10,631,859	B2	4/2020	Shelton, IV et al.
10,631,860	B2	4/2020	Bakos et al.
10,636,104	B2	4/2020	Mazar et al.
10,639,018	B2	5/2020	Shelton, IV et al.
10,639,034	B2	5/2020	Harris et al.
10,639,035	B2	5/2020	Shelton, IV et al.
10,639,036	B2	5/2020	Yates et al.
10,639,037	B2	5/2020	Shelton, IV et al.
10,639,089	B2	5/2020	Manwaring et al.
10,639,115	B2	5/2020	Shelton, IV et al.
10,642,633	B1	5/2020	Chopra et al.
10,645,905	B2	5/2020	Gandola et al.
10,646,220	B2	5/2020	Shelton, IV et al.
10,646,292	B2	5/2020	Solomon et al.
10,653,413	B2	5/2020	Worthington et al.
10,653,417	B2	5/2020	Shelton, IV et al.
10,653,435	B2	5/2020	Shelton, IV et al.
10,660,640	B2	5/2020	Yates et al.
10,667,408	B2	5/2020	Sgroi, Jr. et al.
D888,953	S	6/2020	Baxter, III et al.
10,667,808	B2	6/2020	Baxter, III et al.
10,667,809	B2	6/2020	Bakos et al.
10,667,810	B2	6/2020	Shelton, IV et al.
10,667,811	B2	6/2020	Harris et al.
10,667,818	B2	6/2020	McLain et al.
10,674,895	B2	6/2020	Yeung et al.
10,675,021	B2	6/2020	Harris et al.
10,675,024	B2	6/2020	Shelton, IV et al.
10,675,025	B2	6/2020	Swayze et al.
10,675,026	B2	6/2020	Harris et al.
10,675,028	B2	6/2020	Shelton, IV et al.
10,675,035	B2	6/2020	Zingman
10,675,080	B2	6/2020	Woloszko et al.
10,675,102	B2	6/2020	Forgione et al.
10,677,035	B2	6/2020	Balan et al.
10,682,134	B2	6/2020	Shelton, IV et al.
10,682,136	B2	6/2020	Harris et al.
10,682,137	B2	6/2020	Stokes et al.
10,682,138	B2	6/2020	Shelton, IV et al.
10,682,141	B2	6/2020	Moore et al.
10,682,142	B2	6/2020	Shelton, IV et al.

(56) **References Cited**

U.S. PATENT DOCUMENTS

10,687,806	B2	6/2020	Shelton, IV et al.
10,687,809	B2	6/2020	Shelton, IV et al.
10,687,810	B2	6/2020	Shelton, IV et al.
10,687,812	B2	6/2020	Shelton, IV et al.
10,687,813	B2	6/2020	Shelton, IV et al.
10,687,817	B2	6/2020	Shelton, IV et al.
10,687,819	B2	6/2020	Stokes et al.
10,687,904	B2	6/2020	Harris et al.
10,695,053	B2	6/2020	Hess et al.
10,695,055	B2	6/2020	Shelton, IV et al.
10,695,057	B2	6/2020	Shelton, IV et al.
10,695,058	B2	6/2020	Lytle, IV et al.
10,695,062	B2	6/2020	Leimbach et al.
10,695,063	B2	6/2020	Morgan et al.
10,695,074	B2	6/2020	Carusillo
10,695,081	B2	6/2020	Shelton, IV et al.
10,695,119	B2	6/2020	Smith
10,695,123	B2	6/2020	Allen, IV
10,695,187	B2	6/2020	Moskowitz et al.
D890,784	S	7/2020	Shelton, IV et al.
10,702,266	B2	7/2020	Parihar et al.
10,702,267	B2	7/2020	Hess et al.
10,702,270	B2	7/2020	Shelton, IV et al.
10,702,271	B2	7/2020	Aranyi et al.
10,705,660	B2	7/2020	Xiao
10,709,446	B2	7/2020	Harris et al.
10,709,468	B2	7/2020	Shelton, IV et al.
10,709,469	B2	7/2020	Shelton, IV et al.
10,709,496	B2	7/2020	Moua et al.
10,716,563	B2	7/2020	Shelton, IV et al.
10,716,565	B2	7/2020	Shelton, IV et al.
10,716,568	B2	7/2020	Hall et al.
10,716,614	B2	7/2020	Yates et al.
10,717,179	B2	7/2020	Koenig et al.
10,722,232	B2	7/2020	Yates et al.
10,722,233	B2	7/2020	Wellman
10,722,292	B2	7/2020	Arya et al.
10,722,293	B2	7/2020	Arya et al.
10,722,317	B2	7/2020	Ward et al.
D893,717	S	8/2020	Messerly et al.
10,729,432	B2	8/2020	Shelton, IV et al.
10,729,434	B2	8/2020	Harris et al.
10,729,435	B2	8/2020	Richard
10,729,436	B2	8/2020	Shelton, IV et al.
10,729,443	B2	8/2020	Cabrera et al.
10,729,458	B2	8/2020	Stoddard et al.
10,729,501	B2	8/2020	Leimbach et al.
10,729,509	B2	8/2020	Shelton, IV et al.
10,736,616	B2	8/2020	Scheib et al.
10,736,628	B2	8/2020	Yates et al.
10,736,629	B2	8/2020	Shelton, IV et al.
10,736,630	B2	8/2020	Huang et al.
10,736,633	B2	8/2020	Vendely et al.
10,736,634	B2	8/2020	Shelton, IV et al.
10,736,636	B2	8/2020	Baxter, III et al.
10,736,644	B2	8/2020	Windolf et al.
10,736,702	B2	8/2020	Harris et al.
10,737,398	B2	8/2020	Remirez et al.
10,743,849	B2	8/2020	Shelton, IV et al.
10,743,850	B2	8/2020	Hibner et al.
10,743,851	B2	8/2020	Swayze et al.
10,743,868	B2	8/2020	Shelton, IV et al.
10,743,870	B2	8/2020	Hall et al.
10,743,872	B2	8/2020	Leimbach et al.
10,743,873	B2	8/2020	Overmyer et al.
10,743,874	B2	8/2020	Shelton, IV et al.
10,743,875	B2	8/2020	Shelton, IV et al.
10,743,877	B2	8/2020	Shelton, IV et al.
10,743,930	B2	8/2020	Nagtegaal
10,751,048	B2	8/2020	Whitman et al.
10,751,053	B2	8/2020	Harris et al.
10,751,076	B2	8/2020	Laurent et al.
10,751,138	B2	8/2020	Giordano et al.
10,758,229	B2	9/2020	Shelton, IV et al.
10,758,230	B2	9/2020	Shelton, IV et al.
10,758,232	B2	9/2020	Shelton, IV et al.
10,758,233	B2	9/2020	Scheib et al.
10,758,259	B2	9/2020	Demmy et al.
10,765,425	B2	9/2020	Yates et al.
10,765,427	B2	9/2020	Shelton, IV et al.
10,765,429	B2	9/2020	Leimbach et al.
10,765,430	B2	9/2020	Wixey
10,765,432	B2	9/2020	Moore et al.
10,765,442	B2	9/2020	Strobl
10,772,625	B2	9/2020	Shelton, IV et al.
10,772,628	B2	9/2020	Chen et al.
10,772,629	B2	9/2020	Shelton, IV et al.
10,772,630	B2	9/2020	Wixey
10,772,631	B2	9/2020	Zergiebel et al.
10,772,632	B2	9/2020	Kostrzewski
10,772,651	B2	9/2020	Shelton, IV et al.
10,779,818	B2	9/2020	Zemlok et al.
10,779,820	B2	9/2020	Harris et al.
10,779,821	B2	9/2020	Harris et al.
10,779,822	B2	9/2020	Yates et al.
10,779,823	B2	9/2020	Shelton, IV et al.
10,779,824	B2	9/2020	Shelton, IV et al.
10,779,825	B2	9/2020	Shelton, IV et al.
10,779,826	B2	9/2020	Shelton, IV et al.
10,779,903	B2	9/2020	Wise et al.
10,780,539	B2	9/2020	Shelton, IV et al.
10,786,248	B2	9/2020	Rousseau et al.
10,786,253	B2	9/2020	Shelton, IV et al.
10,786,255	B2	9/2020	Hodgkinson et al.
10,792,038	B2	10/2020	Becerra et al.
10,796,471	B2	10/2020	Leimbach et al.
10,799,240	B2	10/2020	Shelton, IV et al.
10,799,306	B2	10/2020	Robinson et al.
10,806,448	B2	10/2020	Shelton, IV et al.
10,806,449	B2	10/2020	Shelton, IV et al.
10,806,450	B2	10/2020	Yates et al.
10,806,451	B2	10/2020	Harris et al.
10,806,453	B2	10/2020	Chen et al.
10,806,479	B2	10/2020	Shelton, IV et al.
10,813,638	B2	10/2020	Shelton, IV et al.
10,813,639	B2	10/2020	Shelton, IV et al.
10,813,640	B2	10/2020	Adams et al.
10,813,641	B2	10/2020	Setser et al.
10,813,683	B2	10/2020	Baxter, III et al.
10,813,705	B2	10/2020	Hares et al.
10,813,710	B2	10/2020	Grubbs
10,820,939	B2	11/2020	Sartor
10,828,028	B2	11/2020	Harris et al.
10,828,030	B2	11/2020	Weir et al.
10,828,032	B2	11/2020	Leimbach et al.
10,828,033	B2	11/2020	Shelton, IV et al.
10,828,089	B2	11/2020	Clark et al.
10,835,245	B2	11/2020	Swayze et al.
10,835,246	B2	11/2020	Shelton, IV et al.
10,835,247	B2	11/2020	Shelton, IV et al.
10,835,249	B2	11/2020	Schellin et al.
10,835,251	B2	11/2020	Shelton, IV et al.
10,835,330	B2	11/2020	Shelton, IV et al.
10,842,357	B2	11/2020	Moskowitz et al.
10,842,473	B2	11/2020	Scheib et al.
10,842,488	B2	11/2020	Swayze et al.
10,842,489	B2	11/2020	Shelton, IV
10,842,490	B2	11/2020	DiNardo et al.
10,842,491	B2	11/2020	Shelton, IV et al.
10,842,492	B2	11/2020	Shelton, IV et al.
D904,612	S	12/2020	Wynn et al.
D904,613	S	12/2020	Wynn et al.
D906,355	S	12/2020	Messerly et al.
10,849,621	B2	12/2020	Whitfield et al.
10,849,623	B2	12/2020	Dunki-Jacobs et al.
10,849,697	B2	12/2020	Yates et al.
10,856,866	B2	12/2020	Shelton, IV et al.
10,856,867	B2	12/2020	Shelton, IV et al.
10,856,868	B2	12/2020	Shelton, IV et al.
10,856,869	B2	12/2020	Shelton, IV et al.
10,856,870	B2	12/2020	Harris et al.
10,863,981	B2	12/2020	Overmyer et al.
10,863,984	B2	12/2020	Shelton, IV et al.
10,863,986	B2	12/2020	Yates et al.

(56) **References Cited**

U.S. PATENT DOCUMENTS

10,869,663	B2	12/2020	Shelton, IV et al.
10,869,664	B2	12/2020	Shelton, IV
10,869,665	B2	12/2020	Shelton, IV et al.
10,869,666	B2	12/2020	Shelton, IV et al.
10,869,669	B2	12/2020	Shelton, IV et al.
10,874,290	B2	12/2020	Walen et al.
10,874,391	B2	12/2020	Shelton, IV et al.
10,874,392	B2	12/2020	Scirica et al.
10,874,393	B2	12/2020	Satti, III et al.
10,874,396	B2	12/2020	Moore et al.
10,874,399	B2	12/2020	Zhang
10,879,275	B2	12/2020	Li et al.
D907,647	S	1/2021	Siebel et al.
D907,648	S	1/2021	Siebel et al.
D908,216	S	1/2021	Messerly et al.
10,881,395	B2	1/2021	Merchant et al.
10,881,396	B2	1/2021	Shelton, IV et al.
10,881,399	B2	1/2021	Shelton, IV et al.
10,881,401	B2	1/2021	Baber et al.
10,881,446	B2	1/2021	Strobl
10,888,318	B2	1/2021	Parihar et al.
10,888,321	B2	1/2021	Shelton, IV et al.
10,888,322	B2	1/2021	Morgan et al.
10,888,323	B2	1/2021	Chen et al.
10,888,325	B2	1/2021	Harris et al.
10,888,328	B2	1/2021	Shelton, IV et al.
10,888,329	B2	1/2021	Moore et al.
10,888,330	B2	1/2021	Moore et al.
10,888,369	B2	1/2021	Messerly et al.
10,892,899	B2	1/2021	Shelton, IV et al.
10,893,853	B2	1/2021	Shelton, IV et al.
10,893,863	B2	1/2021	Shelton, IV et al.
10,893,864	B2	1/2021	Harris et al.
10,893,867	B2	1/2021	Leimbach et al.
10,898,183	B2	1/2021	Shelton, IV et al.
10,898,184	B2	1/2021	Yates et al.
10,898,185	B2	1/2021	Overmyer et al.
10,898,186	B2	1/2021	Bakos et al.
10,898,190	B2	1/2021	Yates et al.
10,898,193	B2	1/2021	Shelton, IV et al.
10,898,194	B2	1/2021	Moore et al.
10,898,195	B2	1/2021	Moore et al.
10,903,685	B2	1/2021	Yates et al.
D910,847	S	2/2021	Shelton, IV et al.
10,905,415	B2	2/2021	DiNardo et al.
10,905,418	B2	2/2021	Shelton, IV et al.
10,905,420	B2	2/2021	Jasemian et al.
10,905,422	B2	2/2021	Bakos et al.
10,905,423	B2	2/2021	Baber et al.
10,905,426	B2	2/2021	Moore et al.
10,905,427	B2	2/2021	Moore et al.
10,911,515	B2	2/2021	Biasi et al.
10,912,559	B2	2/2021	Harris et al.
10,912,562	B2	2/2021	Dunki-Jacobs et al.
10,912,575	B2	2/2021	Shelton, IV et al.
10,918,364	B2	2/2021	Applegate et al.
10,918,380	B2	2/2021	Morgan et al.
10,918,385	B2	2/2021	Overmyer et al.
10,918,386	B2	2/2021	Shelton, IV et al.
10,919,156	B2	2/2021	Roberts et al.
10,925,600	B2	2/2021	McCuen
10,925,605	B2	2/2021	Moore et al.
D914,878	S	3/2021	Shelton, IV et al.
10,932,772	B2	3/2021	Shelton, IV et al.
10,932,774	B2	3/2021	Shelton, IV
10,932,775	B2	3/2021	Shelton, IV et al.
10,932,778	B2	3/2021	Smith et al.
10,932,779	B2	3/2021	Vendely et al.
10,932,784	B2	3/2021	Mozdzierz et al.
10,932,804	B2	3/2021	Scheib et al.
10,932,806	B2	3/2021	Shelton, IV et al.
10,932,872	B2	3/2021	Shelton, IV et al.
10,944,728	B2	3/2021	Wiener et al.
10,945,727	B2	3/2021	Shelton, IV et al.
10,945,728	B2	3/2021	Morgan et al.
10,945,729	B2	3/2021	Shelton, IV et al.
10,945,731	B2	3/2021	Baxter, III et al.
10,952,708	B2	3/2021	Scheib et al.
10,952,726	B2	3/2021	Chowaniec
10,952,727	B2	3/2021	Giordano et al.
10,952,728	B2	3/2021	Shelton, IV et al.
10,952,759	B2	3/2021	Messerly et al.
10,952,767	B2	3/2021	Kostrzewski et al.
10,959,722	B2	3/2021	Morgan et al.
10,959,725	B2	3/2021	Kerr et al.
10,959,726	B2	3/2021	Williams et al.
10,959,727	B2	3/2021	Hunter et al.
10,959,731	B2	3/2021	Casasanta, Jr. et al.
10,959,744	B2	3/2021	Shelton, IV et al.
10,959,797	B2	3/2021	Licht et al.
D917,500	S	4/2021	Siebel et al.
10,966,627	B2	4/2021	Shelton, IV et al.
10,966,717	B2	4/2021	Shah et al.
10,966,718	B2	4/2021	Shelton, IV et al.
10,966,791	B2	4/2021	Harris et al.
10,973,515	B2	4/2021	Harris et al.
10,973,516	B2	4/2021	Shelton, IV et al.
10,973,517	B2	4/2021	Wixey
10,973,519	B2	4/2021	Weir et al.
10,973,520	B2	4/2021	Shelton, IV et al.
10,980,534	B2	4/2021	Yates et al.
10,980,535	B2	4/2021	Yates et al.
10,980,536	B2	4/2021	Weaner et al.
10,980,537	B2	4/2021	Shelton, IV et al.
10,980,538	B2	4/2021	Nalagatla et al.
10,980,539	B2	4/2021	Harris et al.
10,980,560	B2	4/2021	Shelton, IV et al.
10,983,646	B2	4/2021	Yoon et al.
10,987,102	B2	4/2021	Gonzalez et al.
10,987,178	B2	4/2021	Shelton, IV et al.
10,993,713	B2	5/2021	Shelton, IV et al.
10,993,715	B2	5/2021	Shelton, IV et al.
10,993,716	B2	5/2021	Shelton, IV et al.
10,993,717	B2	5/2021	Shelton, IV et al.
11,000,274	B2	5/2021	Shelton, IV et al.
11,000,275	B2	5/2021	Shelton, IV et al.
11,000,277	B2	5/2021	Giordano et al.
11,000,278	B2	5/2021	Shelton, IV et al.
11,000,279	B2	5/2021	Shelton, IV et al.
11,005,291	B2	5/2021	Calderoni
11,006,951	B2	5/2021	Giordano et al.
11,006,955	B2	5/2021	Shelton, IV et al.
11,007,004	B2	5/2021	Shelton, IV et al.
11,007,022	B2	5/2021	Shelton, IV et al.
11,013,511	B2	5/2021	Huang et al.
11,013,552	B2	5/2021	Widenhouse et al.
11,013,563	B2	5/2021	Shelton, IV et al.
11,020,016	B2	6/2021	Wallace et al.
11,020,112	B2	6/2021	Shelton, IV et al.
11,020,113	B2	6/2021	Shelton, IV et al.
11,020,114	B2	6/2021	Shelton, IV et al.
11,020,115	B2	6/2021	Scheib et al.
11,026,678	B2	6/2021	Overmyer et al.
11,026,680	B2	6/2021	Shelton, IV et al.
11,026,684	B2	6/2021	Shelton, IV et al.
11,026,687	B2	6/2021	Shelton, IV et al.
11,026,712	B2	6/2021	Shelton, IV et al.
11,026,713	B2	6/2021	Stokes et al.
11,026,751	B2	6/2021	Shelton, IV et al.
11,033,267	B2	6/2021	Shelton, IV et al.
11,039,834	B2	6/2021	Harris et al.
11,039,836	B2	6/2021	Shelton, IV et al.
11,039,837	B2	6/2021	Shelton, IV et al.
11,039,849	B2	6/2021	Bucciaglia et al.
11,045,189	B2	6/2021	Yates et al.
11,045,191	B2	6/2021	Shelton, IV et al.
11,045,192	B2	6/2021	Harris et al.
11,045,196	B2	6/2021	Olson et al.
11,045,197	B2	6/2021	Shelton, IV et al.
11,045,199	B2	6/2021	Mozdzierz et al.
11,045,270	B2	6/2021	Shelton, IV et al.
11,051,807	B2	7/2021	Shelton, IV et al.
11,051,810	B2	7/2021	Harris et al.
11,051,811	B2	7/2021	Shelton, IV et al.

(56) **References Cited**

U.S. PATENT DOCUMENTS

11,051,813	B2	7/2021	Shelton, IV et al.
11,051,836	B2	7/2021	Shelton, IV et al.
11,051,840	B2	7/2021	Shelton, IV et al.
11,051,873	B2	7/2021	Wiener et al.
11,058,418	B2	7/2021	Shelton, IV et al.
11,058,420	B2	7/2021	Shelton, IV et al.
11,058,422	B2	7/2021	Harris et al.
11,058,423	B2	7/2021	Shelton, IV et al.
11,058,424	B2	7/2021	Shelton, IV et al.
11,058,425	B2	7/2021	Widenhouse et al.
11,058,426	B2	7/2021	Nalagatla et al.
11,058,498	B2	7/2021	Shelton, IV et al.
11,064,997	B2	7/2021	Shelton, IV et al.
11,064,998	B2	7/2021	Shelton, IV
11,065,048	B2	7/2021	Messerly et al.
11,069,012	B2	7/2021	Shelton, IV et al.
11,071,542	B2	7/2021	Chen et al.
11,071,543	B2	7/2021	Shelton, IV et al.
11,071,545	B2	7/2021	Baber et al.
11,071,554	B2	7/2021	Parfett et al.
11,071,560	B2	7/2021	Deck et al.
11,076,853	B2	8/2021	Parfett et al.
11,076,854	B2	8/2021	Baber et al.
11,076,921	B2	8/2021	Shelton, IV et al.
11,076,929	B2	8/2021	Shelton, IV et al.
11,083,452	B2	8/2021	Schmid et al.
11,083,453	B2	8/2021	Shelton, IV et al.
11,083,454	B2	8/2021	Harris et al.
11,083,455	B2	8/2021	Shelton, IV et al.
11,083,456	B2	8/2021	Shelton, IV et al.
11,083,457	B2	8/2021	Shelton, IV et al.
11,083,458	B2	8/2021	Harris et al.
11,090,045	B2	8/2021	Shelton, IV
11,090,046	B2	8/2021	Shelton, IV et al.
11,090,047	B2	8/2021	Shelton, IV et al.
11,090,048	B2	8/2021	Fanelli et al.
11,090,049	B2	8/2021	Bakos et al.
11,090,075	B2	8/2021	Hunter et al.
11,096,688	B2	8/2021	Shelton, IV et al.
11,096,689	B2	8/2021	Overmyer et al.
11,100,631	B2	8/2021	Yates et al.
11,103,241	B2	8/2021	Yates et al.
11,103,248	B2	8/2021	Shelton, IV et al.
11,103,268	B2	8/2021	Shelton, IV et al.
11,103,269	B2	8/2021	Shelton, IV et al.
11,109,858	B2	9/2021	Shelton, IV et al.
11,109,859	B2	9/2021	Overmyer et al.
11,109,860	B2	9/2021	Shelton, IV et al.
11,109,866	B2	9/2021	Shelton, IV et al.
11,109,878	B2	9/2021	Shelton, IV et al.
11,109,925	B2	9/2021	Cooper et al.
11,116,485	B2	9/2021	Scheib et al.
11,116,502	B2	9/2021	Shelton, IV et al.
11,116,594	B2	9/2021	Beardsley
11,123,069	B2	9/2021	Baxter, III et al.
11,123,070	B2	9/2021	Shelton, IV et al.
11,129,611	B2	9/2021	Shelton, IV et al.
11,129,613	B2	9/2021	Harris et al.
11,129,615	B2	9/2021	Scheib et al.
11,129,616	B2	9/2021	Shelton, IV et al.
11,129,634	B2	9/2021	Scheib et al.
11,129,636	B2	9/2021	Shelton, IV et al.
11,129,666	B2	9/2021	Messerly et al.
11,129,680	B2	9/2021	Shelton, IV et al.
11,132,462	B2	9/2021	Shelton, IV et al.
11,133,106	B2	9/2021	Shelton, IV et al.
11,134,938	B2	10/2021	Timm et al.
11,134,940	B2	10/2021	Shelton, IV et al.
11,134,942	B2	10/2021	Harris et al.
11,134,943	B2	10/2021	Giordano et al.
11,134,944	B2	10/2021	Wise et al.
11,134,947	B2	10/2021	Shelton, IV et al.
11,135,352	B2	10/2021	Shelton, IV et al.
11,141,153	B2	10/2021	Shelton, IV et al.
11,141,154	B2	10/2021	Shelton, IV et al.
11,141,155	B2	10/2021	Shelton, IV
11,141,156	B2	10/2021	Shelton, IV
11,141,159	B2	10/2021	Scheib et al.
11,141,160	B2	10/2021	Shelton, IV et al.
11,147,547	B2	10/2021	Shelton, IV et al.
11,147,549	B2	10/2021	Timm et al.
11,147,551	B2	10/2021	Shelton, IV
11,147,553	B2	10/2021	Shelton, IV
11,147,554	B2	10/2021	Aronhalt et al.
11,154,296	B2	10/2021	Aronhalt et al.
11,154,297	B2	10/2021	Swayze et al.
11,154,298	B2	10/2021	Timm et al.
11,154,299	B2	10/2021	Shelton, IV et al.
11,154,300	B2	10/2021	Nalagatla et al.
11,154,301	B2	10/2021	Beckman et al.
11,160,551	B2	11/2021	Shelton, IV et al.
11,160,553	B2	11/2021	Simms et al.
11,160,601	B2	11/2021	Worrell et al.
11,166,716	B2	11/2021	Shelton, IV et al.
11,166,717	B2	11/2021	Shelton, IV et al.
11,166,720	B2	11/2021	Giordano et al.
11,166,772	B2	11/2021	Shelton, IV et al.
11,166,773	B2	11/2021	Ragosta et al.
11,172,580	B2	11/2021	Gaertner, II
11,172,927	B2	11/2021	Shelton, IV
11,172,929	B2	11/2021	Shelton, IV
11,179,150	B2	11/2021	Yates et al.
11,179,151	B2	11/2021	Shelton, IV et al.
11,179,152	B2	11/2021	Morgan et al.
11,179,153	B2	11/2021	Shelton, IV
11,179,155	B2	11/2021	Shelton, IV et al.
11,179,208	B2	11/2021	Yates et al.
11,185,325	B2	11/2021	Shelton, IV et al.
11,185,330	B2	11/2021	Huitema et al.
11,191,539	B2	12/2021	Overmyer et al.
11,191,540	B2	12/2021	Aronhalt et al.
11,191,543	B2	12/2021	Overmyer et al.
11,191,545	B2	12/2021	Vendely et al.
11,197,668	B2	12/2021	Shelton, IV et al.
11,197,670	B2	12/2021	Shelton, IV et al.
11,197,671	B2	12/2021	Shelton, IV et al.
11,197,672	B2	12/2021	Dunki-Jacobs et al.
11,202,570	B2	12/2021	Shelton, IV et al.
11,202,631	B2	12/2021	Shelton, IV et al.
11,202,633	B2	12/2021	Harris et al.
11,207,064	B2	12/2021	Shelton, IV et al.
11,207,065	B2	12/2021	Harris et al.
11,207,067	B2	12/2021	Shelton, IV et al.
11,207,089	B2	12/2021	Kostrzewski et al.
11,207,090	B2	12/2021	Shelton, IV et al.
11,207,146	B2	12/2021	Shelton, IV et al.
11,213,293	B2	1/2022	Worthington et al.
11,213,294	B2	1/2022	Shelton, IV et al.
11,213,302	B2	1/2022	Parfett et al.
11,213,359	B2	1/2022	Shelton, IV et al.
11,219,453	B2	1/2022	Shelton, IV et al.
11,219,455	B2	1/2022	Shelton, IV et al.
11,224,423	B2	1/2022	Shelton, IV et al.
11,224,426	B2	1/2022	Shelton, IV et al.
11,224,427	B2	1/2022	Shelton, IV et al.
11,224,428	B2	1/2022	Scott et al.
11,224,454	B2	1/2022	Shelton, IV et al.
11,224,497	B2	1/2022	Shelton, IV et al.
11,229,436	B2	1/2022	Shelton, IV et al.
11,229,437	B2	1/2022	Shelton, IV et al.
11,234,698	B2	2/2022	Shelton, IV et al.
11,234,700	B2	2/2022	Ragosta et al.
11,241,229	B2	2/2022	Shelton, IV et al.
11,241,230	B2	2/2022	Shelton, IV et al.
11,241,235	B2	2/2022	Shelton, IV et al.
11,246,590	B2	2/2022	Swayze et al.
11,246,592	B2	2/2022	Shelton, IV et al.
11,246,616	B2	2/2022	Shelton, IV et al.
11,246,618	B2	2/2022	Hall et al.
11,246,678	B2	2/2022	Shelton, IV et al.
11,253,254	B2	2/2022	Kimball et al.
11,253,256	B2	2/2022	Harris et al.
11,259,799	B2	3/2022	Overmyer et al.
11,259,803	B2	3/2022	Shelton, IV et al.

(56) **References Cited**

U.S. PATENT DOCUMENTS

11,259,805	B2	3/2022	Shelton, IV et al.
11,259,806	B2	3/2022	Shelton, IV et al.
11,259,807	B2	3/2022	Shelton, IV et al.
11,266,405	B2	3/2022	Shelton, IV et al.
11,266,406	B2	3/2022	Leimbach et al.
11,266,409	B2	3/2022	Huitema et al.
11,266,410	B2	3/2022	Shelton, IV et al.
11,266,468	B2	3/2022	Shelton, IV et al.
11,272,927	B2	3/2022	Swayze et al.
11,272,928	B2	3/2022	Shelton, IV
11,272,931	B2	3/2022	Boudreaux et al.
11,272,938	B2	3/2022	Shelton, IV et al.
11,278,279	B2	3/2022	Morgan et al.
11,278,280	B2	3/2022	Shelton, IV et al.
11,278,284	B2	3/2022	Shelton, IV et al.
11,284,890	B2	3/2022	Nalagatla et al.
11,284,891	B2	3/2022	Shelton, IV et al.
11,284,898	B2	3/2022	Baxter, III et al.
11,284,953	B2	3/2022	Shelton, IV et al.
11,291,440	B2	4/2022	Harris et al.
11,291,441	B2	4/2022	Giordano et al.
11,291,443	B2	4/2022	Viola et al.
11,291,444	B2	4/2022	Boudreaux et al.
11,291,445	B2	4/2022	Shelton, IV et al.
11,291,447	B2	4/2022	Shelton, IV et al.
11,291,449	B2	4/2022	Swensgard et al.
11,291,451	B2	4/2022	Shelton, IV
11,291,465	B2	4/2022	Parihar et al.
11,291,510	B2	4/2022	Shelton, IV et al.
11,298,125	B2	4/2022	Ming et al.
11,298,127	B2	4/2022	Shelton, IV
11,298,128	B2	4/2022	Messerly et al.
11,298,129	B2	4/2022	Bakos et al.
11,298,130	B2	4/2022	Bakos et al.
11,298,132	B2	4/2022	Shelton, IV et al.
11,298,134	B2	4/2022	Huitema et al.
11,304,695	B2	4/2022	Shelton, IV et al.
11,304,696	B2	4/2022	Shelton, IV et al.
11,304,697	B2	4/2022	Fanelli et al.
11,304,699	B2	4/2022	Shelton, IV et al.
11,304,704	B2	4/2022	Thomas et al.
11,311,290	B2	4/2022	Shelton, IV et al.
11,311,292	B2	4/2022	Shelton, IV et al.
11,311,294	B2	4/2022	Swayze et al.
11,311,295	B2	4/2022	Wingardner et al.
11,311,342	B2	4/2022	Parihar et al.
D950,728	S	5/2022	Bakos et al.
D952,144	S	5/2022	Boudreaux
11,317,910	B2	5/2022	Miller et al.
11,317,912	B2	5/2022	Jenkins et al.
11,317,913	B2	5/2022	Shelton, IV et al.
11,317,915	B2	5/2022	Boudreaux et al.
11,317,917	B2	5/2022	Shelton, IV et al.
11,317,919	B2	5/2022	Shelton, IV et al.
11,317,978	B2	5/2022	Cameron et al.
11,324,501	B2	5/2022	Shelton, IV et al.
11,324,503	B2	5/2022	Shelton, IV et al.
11,324,506	B2	5/2022	Beckman et al.
11,324,557	B2	5/2022	Shelton, IV et al.
11,331,100	B2	5/2022	Boudreaux et al.
11,331,101	B2	5/2022	Harris et al.
11,337,691	B2	5/2022	Widenhouse et al.
11,337,693	B2	5/2022	Hess et al.
11,337,698	B2	5/2022	Baxter, III et al.
11,344,299	B2	5/2022	Yates et al.
11,344,303	B2	5/2022	Shelton, IV et al.
11,350,843	B2	6/2022	Shelton, IV et al.
11,350,916	B2	6/2022	Shelton, IV et al.
11,350,928	B2	6/2022	Shelton, IV et al.
11,350,929	B2	6/2022	Giordano et al.
11,350,932	B2	6/2022	Shelton, IV et al.
11,350,934	B2	6/2022	Bakos et al.
11,350,935	B2	6/2022	Shelton, IV et al.
11,350,938	B2	6/2022	Shelton, IV et al.
11,357,503	B2	6/2022	Bakos et al.
11,361,176	B2	6/2022	Shelton, IV et al.
11,364,027	B2	6/2022	Harris et al.
11,364,046	B2	6/2022	Shelton, IV et al.
11,369,368	B2	6/2022	Shelton, IV et al.
11,369,376	B2	6/2022	Simms et al.
11,369,377	B2	6/2022	Boudreaux et al.
11,373,755	B2	6/2022	Shelton, IV et al.
11,376,001	B2	7/2022	Shelton, IV et al.
11,376,082	B2	7/2022	Shelton, IV et al.
11,376,098	B2	7/2022	Shelton, IV et al.
11,382,625	B2	7/2022	Huitema et al.
11,382,626	B2	7/2022	Shelton, IV et al.
11,382,627	B2	7/2022	Huitema et al.
11,382,628	B2	7/2022	Baxter, III et al.
11,382,638	B2	7/2022	Harris et al.
11,382,697	B2	7/2022	Shelton, IV et al.
11,389,160	B2	7/2022	Shelton, IV et al.
11,389,161	B2	7/2022	Shelton, IV et al.
11,389,162	B2	7/2022	Baber et al.
11,389,164	B2	7/2022	Yates et al.
11,395,651	B2	7/2022	Shelton, IV et al.
11,395,652	B2	7/2022	Parihar et al.
11,399,828	B2	8/2022	Swayze et al.
11,399,829	B2	8/2022	Leimbach et al.
11,399,831	B2	8/2022	Overmyer et al.
11,399,837	B2	8/2022	Shelton, IV et al.
11,406,377	B2	8/2022	Schmid et al.
11,406,378	B2	8/2022	Baxter, III et al.
11,406,380	B2	8/2022	Yates et al.
11,406,381	B2	8/2022	Parihar et al.
11,406,382	B2	8/2022	Shelton, IV et al.
11,406,386	B2	8/2022	Baber et al.
11,406,390	B2	8/2022	Shelton, IV et al.
11,406,442	B2	8/2022	Davison et al.
11,410,259	B2	8/2022	Harris et al.
11,413,041	B2	8/2022	Viola et al.
11,413,042	B2	8/2022	Shelton, IV et al.
11,413,102	B2	8/2022	Shelton, IV et al.
11,419,606	B2	8/2022	Overmyer et al.
11,419,630	B2	8/2022	Yates et al.
11,424,027	B2	8/2022	Shelton, IV
11,426,160	B2	8/2022	Shelton, IV et al.
11,426,167	B2	8/2022	Shelton, IV et al.
11,426,251	B2	8/2022	Kimball et al.
D964,564	S	9/2022	Boudreaux
11,432,816	B2	9/2022	Leimbach et al.
11,432,885	B2	9/2022	Shelton, IV et al.
11,439,391	B2	9/2022	Bruns et al.
11,439,470	B2	9/2022	Spivey et al.
11,446,029	B2	9/2022	Shelton, IV et al.
11,446,034	B2	9/2022	Shelton, IV et al.
11,452,526	B2	9/2022	Ross et al.
11,452,528	B2	9/2022	Leimbach et al.
D966,512	S	10/2022	Shelton, IV et al.
D967,421	S	10/2022	Shelton, IV et al.
11,457,918	B2	10/2022	Shelton, IV et al.
11,464,511	B2	10/2022	Timm et al.
11,464,512	B2	10/2022	Shelton, IV et al.
11,464,513	B2	10/2022	Shelton, IV et al.
11,464,514	B2	10/2022	Yates et al.
11,464,601	B2	10/2022	Shelton, IV et al.
11,471,155	B2	10/2022	Shelton, IV et al.
11,471,156	B2	10/2022	Shelton, IV et al.
11,471,157	B2	10/2022	Baxter, III et al.
11,478,241	B2	10/2022	Shelton, IV et al.
11,478,242	B2	10/2022	Shelton, IV et al.
11,478,244	B2	10/2022	DiNardo et al.
D971,232	S	11/2022	Siebel et al.
11,484,307	B2	11/2022	Hall et al.
11,484,309	B2	11/2022	Harris et al.
11,484,310	B2	11/2022	Shelton, IV et al.
11,484,311	B2	11/2022	Shelton, IV et al.
11,484,312	B2	11/2022	Shelton, IV et al.
11,490,889	B2	11/2022	Overmyer et al.
11,497,488	B2	11/2022	Leimbach et al.
11,497,489	B2	11/2022	Baxter, III et al.
11,497,492	B2	11/2022	Shelton, IV
11,497,499	B2	11/2022	Shelton, IV et al.
11,504,116	B2	11/2022	Schmid et al.

(56) **References Cited**

U.S. PATENT DOCUMENTS

11,504,119	B2	11/2022	Shelton, IV et al.
11,504,122	B2	11/2022	Shelton, IV et al.
11,504,192	B2	11/2022	Shelton, IV et al.
11,510,671	B2	11/2022	Shelton, IV et al.
11,510,741	B2	11/2022	Shelton, IV et al.
11,517,304	B2	12/2022	Yates et al.
11,517,306	B2	12/2022	Miller et al.
11,517,309	B2	12/2022	Bakos et al.
11,517,311	B2	12/2022	Lytle, IV et al.
11,517,315	B2	12/2022	Huitema et al.
11,517,325	B2	12/2022	Shelton, IV et al.
11,517,390	B2	12/2022	Baxter, III
11,523,821	B2	12/2022	Harris et al.
11,523,822	B2	12/2022	Shelton, IV et al.
11,523,823	B2	12/2022	Hunter et al.
11,523,859	B2	12/2022	Shelton, IV et al.
11,529,137	B2	12/2022	Shelton, IV et al.
11,529,138	B2	12/2022	Jaworek et al.
11,529,139	B2	12/2022	Shelton, IV et al.
11,529,140	B2	12/2022	Shelton, IV et al.
11,529,142	B2	12/2022	Leimbach et al.
11,534,162	B2	12/2022	Shelton, IV
11,534,259	B2	12/2022	Leimbach et al.
D974,560	S	1/2023	Shelton, IV et al.
D975,278	S	1/2023	Shelton, IV et al.
D975,850	S	1/2023	Shelton, IV et al.
D975,851	S	1/2023	Shelton, IV et al.
D976,401	S	1/2023	Shelton, IV et al.
11,540,824	B2	1/2023	Shelton, IV et al.
11,540,829	B2	1/2023	Shelton, IV et al.
11,547,403	B2	1/2023	Shelton, IV et al.
11,547,404	B2	1/2023	Shelton, IV et al.
11,553,911	B2	1/2023	Shelton, IV et al.
11,553,916	B2	1/2023	Vendely et al.
11,553,919	B2	1/2023	Shelton, IV et al.
11,553,971	B2	1/2023	Shelton, IV et al.
11,559,302	B2	1/2023	Timm et al.
11,559,303	B2	1/2023	Shelton, IV et al.
11,559,304	B2	1/2023	Boudreaux et al.
11,559,307	B2	1/2023	Shelton, IV et al.
11,559,308	B2	1/2023	Yates et al.
11,559,496	B2	1/2023	Widenhouse et al.
11,564,679	B2	1/2023	Parihar et al.
11,564,682	B2	1/2023	Timm et al.
11,564,686	B2	1/2023	Yates et al.
11,564,688	B2	1/2023	Swayze et al.
11,564,703	B2	1/2023	Shelton, IV et al.
11,564,756	B2	1/2023	Shelton, IV et al.
11,571,207	B2	2/2023	Shelton, IV et al.
11,571,210	B2	2/2023	Shelton, IV et al.
11,571,212	B2	2/2023	Yates et al.
11,571,215	B2	2/2023	Shelton, IV et al.
11,571,231	B2	2/2023	Hess et al.
11,576,668	B2	2/2023	Shelton, IV et al.
11,576,672	B2	2/2023	Shelton, IV et al.
11,576,673	B2	2/2023	Shelton, IV
11,576,677	B2	2/2023	Shelton, IV et al.
12,016,564	B2	6/2024	Harris et al.
2001/0000531	A1	4/2001	Casscells et al.
2001/0025183	A1	9/2001	Shahidi
2001/0025184	A1	9/2001	Messerly
2001/0030219	A1	10/2001	Green et al.
2001/0034530	A1	10/2001	Malackowski et al.
2001/0045442	A1	11/2001	Whitman
2002/0014510	A1	2/2002	Richter et al.
2002/0022810	A1	2/2002	Urich
2002/0022836	A1	2/2002	Goble et al.
2002/0022861	A1	2/2002	Jacobs et al.
2002/0023126	A1	2/2002	Flavin
2002/0029032	A1	3/2002	Arkin
2002/0029036	A1	3/2002	Goble et al.
2002/0042620	A1	4/2002	Julian et al.
2002/0054158	A1	5/2002	Asami
2002/0065535	A1	5/2002	Kneifel et al.
2002/0066764	A1	6/2002	Perry et al.
2002/0082612	A1	6/2002	Moll et al.
2002/0087048	A1	7/2002	Brock et al.
2002/0087148	A1	7/2002	Brock et al.
2002/0091374	A1	7/2002	Cooper
2002/0095175	A1	7/2002	Brock et al.
2002/0103494	A1	8/2002	Pacey
2002/0111621	A1	8/2002	Wallace et al.
2002/0111624	A1	8/2002	Witt et al.
2002/0116063	A1	8/2002	Giannetti et al.
2002/0117533	A1	8/2002	Milliman et al.
2002/0117534	A1	8/2002	Green et al.
2002/0127265	A1	9/2002	Bowman et al.
2002/0128633	A1	9/2002	Brock et al.
2002/0133236	A1	9/2002	Rousseau
2002/0134811	A1	9/2002	Napier et al.
2002/0135474	A1	9/2002	Sylliassen
2002/0138086	A1	9/2002	Sixto et al.
2002/0143340	A1	10/2002	Kaneko
2002/0151770	A1	10/2002	Noll et al.
2002/0158593	A1	10/2002	Henderson et al.
2002/0161277	A1	10/2002	Boone et al.
2002/0177848	A1	11/2002	Truckai et al.
2002/0185514	A1	12/2002	Adams et al.
2002/0188170	A1	12/2002	Santamore et al.
2002/0188287	A1	12/2002	Zvuloni et al.
2003/0009193	A1	1/2003	Corsaro
2003/0011245	A1	1/2003	Fiebig
2003/0012805	A1	1/2003	Chen et al.
2003/0018323	A1	1/2003	Wallace et al.
2003/0028236	A1	2/2003	Gillick et al.
2003/0040670	A1	2/2003	Govari
2003/0045835	A1	3/2003	Anderson et al.
2003/0047230	A1	3/2003	Kim
2003/0047582	A1	3/2003	Sonnenschein et al.
2003/0050628	A1	3/2003	Whitman et al.
2003/0050654	A1	3/2003	Whitman et al.
2003/0066858	A1	4/2003	Holgersson
2003/0078647	A1	4/2003	Vallana et al.
2003/0083648	A1	5/2003	Wang et al.
2003/0084983	A1	5/2003	Rangachari et al.
2003/0093103	A1	5/2003	Malackowski et al.
2003/0094356	A1	5/2003	Waldron
2003/0096158	A1	5/2003	Takano et al.
2003/0105475	A1	6/2003	Sancoff et al.
2003/0114851	A1	6/2003	Truckai et al.
2003/0121586	A1	7/2003	Mitra et al.
2003/0135204	A1	7/2003	Lee et al.
2003/0135388	A1	7/2003	Martucci et al.
2003/0139741	A1	7/2003	Goble et al.
2003/0144660	A1	7/2003	Mollenauer
2003/0149406	A1	8/2003	Martineau et al.
2003/0153908	A1	8/2003	Goble et al.
2003/0153968	A1	8/2003	Geis et al.
2003/0158463	A1	8/2003	Julian et al.
2003/0163029	A1	8/2003	Sonnenschein et al.
2003/0163085	A1	8/2003	Tanner et al.
2003/0164172	A1	9/2003	Chumas et al.
2003/0181800	A1	9/2003	Bonutti
2003/0181900	A1	9/2003	Long
2003/0190584	A1	10/2003	Heasley
2003/0195387	A1	10/2003	Kortenbach et al.
2003/0205029	A1	11/2003	Chapolini et al.
2003/0212005	A1	11/2003	Petito et al.
2003/0216619	A1	11/2003	Scirica et al.
2003/0216732	A1	11/2003	Truckai et al.
2003/0236505	A1	12/2003	Bonadio et al.
2004/0006335	A1	1/2004	Garrison
2004/0006340	A1	1/2004	Latterell et al.
2004/0007608	A1	1/2004	Ehrenfels et al.
2004/0024457	A1	2/2004	Boyce et al.
2004/0028502	A1	2/2004	Cummins
2004/0030333	A1	2/2004	Goble
2004/0034287	A1	2/2004	Hickle
2004/0034357	A1	2/2004	Beane et al.
2004/0044295	A1	3/2004	Reinert et al.
2004/0044364	A1	3/2004	DeVries et al.
2004/0049121	A1	3/2004	Yaron
2004/0049172	A1	3/2004	Root et al.
2004/0059362	A1	3/2004	Knodel et al.

(56) **References Cited**

U.S. PATENT DOCUMENTS

2004/0068161 A1 4/2004 Couvillon
2004/0068224 A1 4/2004 Couvillon et al.
2004/0068307 A1 4/2004 Goble
2004/0070369 A1 4/2004 Sakakibara
2004/0073222 A1 4/2004 Koseki
2004/0078037 A1 4/2004 Batchelor et al.
2004/0082952 A1 4/2004 Dycus et al.
2004/0085180 A1 5/2004 Juang
2004/0092992 A1 5/2004 Adams et al.
2004/0093020 A1 5/2004 Sinton
2004/0093024 A1 5/2004 Lousararian et al.
2004/0098040 A1 5/2004 Taniguchi et al.
2004/0101822 A1 5/2004 Wiesner et al.
2004/0102783 A1 5/2004 Sutterlin et al.
2004/0108357 A1 6/2004 Milliman et al.
2004/0110439 A1 6/2004 Chaikof et al.
2004/0115022 A1 6/2004 Albertson et al.
2004/0116952 A1 6/2004 Sakurai et al.
2004/0119185 A1 6/2004 Chen
2004/0122419 A1 6/2004 Neuberger
2004/0122423 A1 6/2004 Dycus et al.
2004/0133095 A1 7/2004 Dunki-Jacobs et al.
2004/0133189 A1 7/2004 Sakurai
2004/0143297 A1 7/2004 Ramsey
2004/0147909 A1 7/2004 Johnston et al.
2004/0153100 A1 8/2004 Ahlberg et al.
2004/0158261 A1 8/2004 Vu
2004/0164123 A1 8/2004 Racenet et al.
2004/0166169 A1 8/2004 Malaviya et al.
2004/0167572 A1 8/2004 Roth et al.
2004/0181219 A1 9/2004 Goble et al.
2004/0193189 A1 9/2004 Kortenbach et al.
2004/0197367 A1 10/2004 Rezania et al.
2004/0199181 A1 10/2004 Knodel et al.
2004/0204735 A1 10/2004 Shiroff et al.
2004/0218451 A1 11/2004 Said et al.
2004/0222268 A1 11/2004 Bilotti et al.
2004/0225186 A1 11/2004 Horne et al.
2004/0231870 A1 11/2004 McCormick et al.
2004/0232201 A1 11/2004 Wenchell et al.
2004/0236352 A1 11/2004 Wang et al.
2004/0239582 A1 12/2004 Seymour
2004/0243147 A1 12/2004 Lipow
2004/0243151 A1 12/2004 Demmy et al.
2004/0243163 A1 12/2004 Casiano et al.
2004/0247415 A1 12/2004 Mangone
2004/0249366 A1 12/2004 Kunz
2004/0254455 A1 12/2004 Iddan
2004/0254566 A1 12/2004 Plicchi et al.
2004/0254590 A1 12/2004 Hoffman et al.
2004/0254680 A1 12/2004 Sunaoshi
2004/0260315 A1 12/2004 Dell et al.
2004/0267310 A1 12/2004 Racenet et al.
2005/0010158 A1 1/2005 Brugger et al.
2005/0010213 A1 1/2005 Stad et al.
2005/0021078 A1 1/2005 Vleugels et al.
2005/0023325 A1 2/2005 Gresham et al.
2005/0032511 A1 2/2005 Malone et al.
2005/0033352 A1 2/2005 Zepf et al.
2005/0044489 A1 2/2005 Yamagami et al.
2005/0051163 A1 3/2005 Deem et al.
2005/0054946 A1 3/2005 Krzyzanowski
2005/0057225 A1 3/2005 Marquet
2005/0058890 A1 3/2005 Brazell et al.
2005/0059997 A1 3/2005 Bauman et al.
2005/0067548 A1 3/2005 Inoue
2005/0070929 A1 3/2005 Dalessandro et al.
2005/0075561 A1 4/2005 Golden
2005/0079088 A1 4/2005 Wirth et al.
2005/0080342 A1 4/2005 Gilreath et al.
2005/0085693 A1 4/2005 Belson et al.
2005/0085838 A1 4/2005 Thompson et al.
2005/0090709 A1 4/2005 Okada et al.
2005/0090817 A1 4/2005 Phan
2005/0096683 A1 5/2005 Ellins et al.
2005/0116673 A1 6/2005 Carl et al.
2005/0119524 A1 6/2005 Sekine et al.
2005/0120836 A1 6/2005 Anderson
2005/0124855 A1 6/2005 Jaffe et al.
2005/0125028 A1 6/2005 Looper et al.
2005/0125897 A1 6/2005 Wyslucha et al.
2005/0129735 A1 6/2005 Cook et al.
2005/0130682 A1 6/2005 Takara et al.
2005/0131173 A1 6/2005 McDaniel et al.
2005/0131211 A1 6/2005 Bayley et al.
2005/0131390 A1 6/2005 Heinrich et al.
2005/0131436 A1 6/2005 Johnston et al.
2005/0131457 A1 6/2005 Douglas et al.
2005/0137454 A1 6/2005 Saadat et al.
2005/0137455 A1 6/2005 Ewers et al.
2005/0139636 A1 6/2005 Schwemberger et al.
2005/0143759 A1 6/2005 Kelly
2005/0143769 A1 6/2005 White et al.
2005/0145671 A1 7/2005 Viola
2005/0145672 A1 7/2005 Schwemberger et al.
2005/0150928 A1 7/2005 Kameyama et al.
2005/0154258 A1 7/2005 Tartaglia et al.
2005/0154406 A1 7/2005 Bombard et al.
2005/0159778 A1 7/2005 Heinrich et al.
2005/0165419 A1 7/2005 Sauer et al.
2005/0169974 A1 8/2005 Tenerz et al.
2005/0171522 A1 8/2005 Christopherson
2005/0177176 A1 8/2005 Gerbi et al.
2005/0177181 A1 8/2005 Kagan et al.
2005/0177249 A1 8/2005 Kladakis et al.
2005/0182298 A1 8/2005 Ikeda et al.
2005/0182443 A1 8/2005 Jonn et al.
2005/0184121 A1 8/2005 Heinrich
2005/0186240 A1 8/2005 Ringeisen et al.
2005/0187545 A1 8/2005 Hooven et al.
2005/0191936 A1 9/2005 Marine et al.
2005/0197859 A1 9/2005 Wilson et al.
2005/0203550 A1 9/2005 Laufer et al.
2005/0209614 A1 9/2005 Fenter et al.
2005/0216055 A1 9/2005 Scirica et al.
2005/0222587 A1 10/2005 Jinno et al.
2005/0222611 A1 10/2005 Weitkamp
2005/0222616 A1 10/2005 Rethy et al.
2005/0222665 A1 10/2005 Aranyi
2005/0228224 A1 10/2005 Okada et al.
2005/0228446 A1 10/2005 Mooradian et al.
2005/0230453 A1 10/2005 Viola
2005/0240178 A1 10/2005 Morley et al.
2005/0242950 A1 11/2005 Lindsay et al.
2005/0245965 A1 11/2005 Orban, III et al.
2005/0246881 A1 11/2005 Kelly et al.
2005/0251063 A1 11/2005 Basude
2005/0256452 A1 11/2005 DeMarchi et al.
2005/0256546 A1 11/2005 Vaisnys et al.
2005/0258963 A1 11/2005 Rodriguez et al.
2005/0261676 A1 11/2005 Hall et al.
2005/0263563 A1 12/2005 Racenet et al.
2005/0267455 A1 12/2005 Eggers et al.
2005/0267464 A1 12/2005 Truckai et al.
2005/0267529 A1 12/2005 Crockett et al.
2005/0274034 A1 12/2005 Hayashida et al.
2005/0283188 A1 12/2005 Loshakove et al.
2005/0283226 A1 12/2005 Haverkost
2006/0008787 A1 1/2006 Hayman et al.
2006/0011698 A1 1/2006 Okada et al.
2006/0015009 A1 1/2006 Jaffe et al.
2006/0020167 A1 1/2006 Sitzmann
2006/0020258 A1 1/2006 Strauss et al.
2006/0020272 A1 1/2006 Gildenberg
2006/0020336 A1 1/2006 Liddicoat
2006/0025812 A1 2/2006 Shelton
2006/0041188 A1 2/2006 Dirusso et al.
2006/0047275 A1 3/2006 Goble
2006/0049229 A1 3/2006 Milliman et al.
2006/0052824 A1 3/2006 Ransick et al.
2006/0052825 A1 3/2006 Ransick et al.
2006/0064086 A1 3/2006 Odom
2006/0079735 A1 4/2006 Martone et al.
2006/0079874 A1 4/2006 Faller et al.

(56) **References Cited**

U.S. PATENT DOCUMENTS

2006/0079879 A1 4/2006 Faller et al.
2006/0086032 A1 4/2006 Valencic et al.
2006/0087746 A1 4/2006 Lipow
2006/0089535 A1 4/2006 Raz et al.
2006/0097699 A1 5/2006 Kamenoff
2006/0100643 A1 5/2006 Laufer et al.
2006/0100649 A1 5/2006 Hart
2006/0106369 A1 5/2006 Desai et al.
2006/0111711 A1 5/2006 Goble
2006/0111723 A1 5/2006 Chapolini et al.
2006/0116634 A1 6/2006 Shachar
2006/0142656 A1 6/2006 Malackowski et al.
2006/0142772 A1 6/2006 Ralph et al.
2006/0144898 A1 7/2006 Bilotti et al.
2006/0154546 A1 7/2006 Murphy et al.
2006/0161050 A1 7/2006 Butler et al.
2006/0161185 A1 7/2006 Saadat et al.
2006/0167471 A1 7/2006 Phillips
2006/0173290 A1 8/2006 Lavallee et al.
2006/0173470 A1 8/2006 Oray et al.
2006/0176031 A1 8/2006 Forman et al.
2006/0176242 A1 8/2006 Jaramaz et al.
2006/0178556 A1 8/2006 Hasser et al.
2006/0180633 A1 8/2006 Emmons
2006/0180634 A1 8/2006 Shelton et al.
2006/0185682 A1 8/2006 Marczyk
2006/0199999 A1 9/2006 Ikeda et al.
2006/0201989 A1 9/2006 Ojeda
2006/0206100 A1 9/2006 Eskridge et al.
2006/0217729 A1 9/2006 Eskridge et al.
2006/0226196 A1 10/2006 Hueil et al.
2006/0226957 A1 10/2006 Miller et al.
2006/0235368 A1 10/2006 Oz
2006/0241666 A1 10/2006 Briggs et al.
2006/0241691 A1 10/2006 Wilk
2006/0244460 A1 11/2006 Weaver
2006/0247584 A1 11/2006 Sheetz et al.
2006/0252981 A1 11/2006 Matsuda et al.
2006/0252990 A1 11/2006 Kubach
2006/0252993 A1 11/2006 Freed et al.
2006/0258904 A1 11/2006 Stefanchik et al.
2006/0259073 A1 11/2006 Miyamoto et al.
2006/0261763 A1 11/2006 Iott et al.
2006/0263444 A1 11/2006 Ming et al.
2006/0264831 A1 11/2006 Skwarek et al.
2006/0264929 A1 11/2006 Goble et al.
2006/0271042 A1 11/2006 Latterell et al.
2006/0271102 A1 11/2006 Bosshard et al.
2006/0282064 A1 12/2006 Shimizu et al.
2006/0284730 A1 12/2006 Schmid et al.
2006/0287576 A1 12/2006 Tsuji et al.
2006/0289600 A1 12/2006 Wales et al.
2006/0289602 A1 12/2006 Wales et al.
2006/0291981 A1 12/2006 Viola et al.
2007/0005045 A1 1/2007 Mintz et al.
2007/0009570 A1 1/2007 Kim et al.
2007/0010702 A1 1/2007 Wang et al.
2007/0010838 A1 1/2007 Shelton et al.
2007/0016235 A1 1/2007 Tanaka et al.
2007/0018958 A1 1/2007 Tavakoli et al.
2007/0026039 A1 2/2007 Drumheller et al.
2007/0026040 A1 2/2007 Crawley et al.
2007/0027459 A1 2/2007 Horvath et al.
2007/0027468 A1 2/2007 Wales et al.
2007/0027551 A1 2/2007 Farnsworth et al.
2007/0043338 A1 2/2007 Moll et al.
2007/0043387 A1 2/2007 Vargas et al.
2007/0049951 A1 3/2007 Menn
2007/0049966 A1 3/2007 Bonadio et al.
2007/0051375 A1 3/2007 Milliman
2007/0055228 A1 3/2007 Berg et al.
2007/0055305 A1 3/2007 Schnyder et al.
2007/0069851 A1 3/2007 Sung et al.
2007/0073341 A1 3/2007 Smith et al.
2007/0073389 A1 3/2007 Bolduc et al.
2007/0078328 A1 4/2007 Ozaki et al.
2007/0078484 A1 4/2007 Talarico et al.
2007/0084897 A1 4/2007 Shelton et al.
2007/0088376 A1 4/2007 Zacharias
2007/0090788 A1 4/2007 Hansford et al.
2007/0093869 A1 4/2007 Bloom et al.
2007/0102472 A1 5/2007 Shelton
2007/0103437 A1 5/2007 Rosenberg
2007/0106113 A1 5/2007 Ravo
2007/0106317 A1 5/2007 Shelton et al.
2007/0118115 A1 5/2007 Artale et al.
2007/0134251 A1 6/2007 Ashkenazi et al.
2007/0135686 A1 6/2007 Pruitt et al.
2007/0135803 A1 6/2007 Belson
2007/0152612 A1 7/2007 Chen et al.
2007/0152829 A1 7/2007 Lindsay et al.
2007/0155010 A1 7/2007 Farnsworth et al.
2007/0162056 A1 7/2007 Gerbi et al.
2007/0170225 A1 7/2007 Shelton et al.
2007/0173687 A1 7/2007 Shima et al.
2007/0173813 A1 7/2007 Odom
2007/0173872 A1 7/2007 Neuenfeldt
2007/0175950 A1 8/2007 Shelton et al.
2007/0175951 A1 8/2007 Shelton et al.
2007/0175955 A1 8/2007 Shelton et al.
2007/0179476 A1 8/2007 Shelton et al.
2007/0179477 A1 8/2007 Danger
2007/0185545 A1 8/2007 Duke
2007/0187857 A1 8/2007 Riley et al.
2007/0190110 A1 8/2007 Pameijer et al.
2007/0191868 A1 8/2007 Theroux et al.
2007/0191915 A1 8/2007 Strother et al.
2007/0194079 A1 8/2007 Hueil et al.
2007/0194081 A1 8/2007 Hueil et al.
2007/0194082 A1 8/2007 Morgan et al.
2007/0197954 A1 8/2007 Keenan
2007/0198039 A1 8/2007 Jones et al.
2007/0203510 A1 8/2007 Bettuchi
2007/0207010 A1 9/2007 Caspi
2007/0208359 A1 9/2007 Hoffman
2007/0208375 A1 9/2007 Nishizawa et al.
2007/0213750 A1 9/2007 Weadock
2007/0221701 A1 9/2007 Ortiz et al.
2007/0225562 A1 9/2007 Spivey et al.
2007/0233163 A1 10/2007 Bombard et al.
2007/0243227 A1 10/2007 Gertner
2007/0244471 A1 10/2007 Malackowski
2007/0244496 A1 10/2007 Hellenkamp
2007/0246505 A1 10/2007 Pace-Floridia et al.
2007/0260132 A1 11/2007 Sterling
2007/0260242 A1 11/2007 Dycus et al.
2007/0262592 A1 11/2007 Hwang et al.
2007/0270660 A1 11/2007 Caylor et al.
2007/0275035 A1 11/2007 Herman et al.
2007/0276409 A1 11/2007 Ortiz et al.
2007/0279011 A1 12/2007 Jones et al.
2007/0286892 A1 12/2007 Herzberg et al.
2007/0290027 A1 12/2007 Maatta et al.
2007/0296286 A1 12/2007 Avenell
2008/0000941 A1 1/2008 Sonnenschein et al.
2008/0003196 A1 1/2008 Jonn et al.
2008/0007237 A1 1/2008 Nagashima et al.
2008/0015598 A1 1/2008 Prommersberger
2008/0021486 A1 1/2008 Oyola et al.
2008/0029570 A1 2/2008 Shelton et al.
2008/0029573 A1 2/2008 Shelton et al.
2008/0029574 A1 2/2008 Shelton et al.
2008/0029575 A1 2/2008 Shelton et al.
2008/0030170 A1 2/2008 Dacquay et al.
2008/0039746 A1 2/2008 Hissong et al.
2008/0042861 A1 2/2008 Dacquay et al.
2008/0046000 A1 2/2008 Lee et al.
2008/0051833 A1 2/2008 Gramuglia et al.
2008/0064920 A1 3/2008 Bakos et al.
2008/0064921 A1 3/2008 Larkin et al.
2008/0065153 A1 3/2008 Allard et al.
2008/0069736 A1 3/2008 Mingerink et al.
2008/0071328 A1 3/2008 Haubrich et al.
2008/0077158 A1 3/2008 Haider et al.

(56) **References Cited**

U.S. PATENT DOCUMENTS

2008/0078802 A1 4/2008 Hess et al.
2008/0081948 A1 4/2008 Weisenburgh et al.
2008/0082114 A1 4/2008 McKenna et al.
2008/0082125 A1 4/2008 Murray et al.
2008/0082126 A1 4/2008 Murray et al.
2008/0083807 A1 4/2008 Beardsley et al.
2008/0083811 A1 4/2008 Marczyk
2008/0085296 A1 4/2008 Powell et al.
2008/0086078 A1 4/2008 Powell et al.
2008/0091072 A1 4/2008 Omori et al.
2008/0094228 A1 4/2008 Welch et al.
2008/0108443 A1 5/2008 Jinno et al.
2008/0114250 A1 5/2008 Urbano et al.
2008/0125634 A1 5/2008 Ryan et al.
2008/0125749 A1 5/2008 Olson
2008/0126984 A1 5/2008 Fleishman et al.
2008/0128469 A1 6/2008 Dalessandro et al.
2008/0129253 A1 6/2008 Shiue et al.
2008/0135600 A1 6/2008 Hiranuma et al.
2008/0140115 A1 6/2008 Stopek
2008/0140159 A1 6/2008 Bornhoft et al.
2008/0149682 A1 6/2008 Uhm
2008/0154299 A1 6/2008 Livneh
2008/0154335 A1 6/2008 Thrope et al.
2008/0169328 A1 7/2008 Shelton
2008/0169332 A1 7/2008 Shelton et al.
2008/0169333 A1 7/2008 Shelton et al.
2008/0172087 A1 7/2008 Fuchs et al.
2008/0177392 A1 7/2008 Williams et al.
2008/0190989 A1 8/2008 Crews et al.
2008/0196253 A1 8/2008 Ezra et al.
2008/0196419 A1 8/2008 Dube
2008/0197167 A1 8/2008 Viola et al.
2008/0200755 A1 8/2008 Bakos
2008/0200762 A1 8/2008 Stokes et al.
2008/0200835 A1 8/2008 Monson et al.
2008/0200911 A1 8/2008 Long
2008/0200933 A1 8/2008 Bakos et al.
2008/0200934 A1 8/2008 Fox
2008/0206186 A1 8/2008 Butler et al.
2008/0208058 A1 8/2008 Sabata et al.
2008/0210738 A1 9/2008 Shelton et al.
2008/0216704 A1 9/2008 Eisenbeis et al.
2008/0217376 A1 9/2008 Clauson et al.
2008/0234709 A1 9/2008 Houser
2008/0234866 A1 9/2008 Kishi et al.
2008/0242939 A1 10/2008 Johnston
2008/0243088 A1 10/2008 Evans
2008/0243143 A1 10/2008 Kuhns et al.
2008/0249536 A1 10/2008 Stahler et al.
2008/0249608 A1 10/2008 Dave
2008/0255413 A1 10/2008 Zemlok et al.
2008/0255420 A1 10/2008 Lee et al.
2008/0255421 A1 10/2008 Hegeman et al.
2008/0255663 A1 10/2008 Akpek et al.
2008/0262654 A1 10/2008 Omori et al.
2008/0269596 A1 10/2008 Revie et al.
2008/0281171 A1 11/2008 Fennell et al.
2008/0281332 A1 11/2008 Taylor
2008/0287944 A1 11/2008 Pearson et al.
2008/0293910 A1 11/2008 Kapiamba et al.
2008/0294179 A1 11/2008 Balbierz et al.
2008/0296346 A1 12/2008 Shelton, IV et al.
2008/0296347 A1 12/2008 Shelton, IV et al.
2008/0297287 A1 12/2008 Shachar et al.
2008/0298784 A1 12/2008 Kastner
2008/0308504 A1 12/2008 Hallan et al.
2008/0308602 A1 12/2008 Timm et al.
2008/0308603 A1 12/2008 Shelton et al.
2008/0308607 A1 12/2008 Timm et al.
2008/0308807 A1 12/2008 Yamazaki et al.
2008/0312686 A1 12/2008 Ellingwood
2008/0312687 A1 12/2008 Blier
2008/0315829 A1 12/2008 Jones et al.
2009/0001121 A1 1/2009 Hess et al.
2009/0001130 A1 1/2009 Hess et al.
2009/0004455 A1 1/2009 Gravagna et al.
2009/0005809 A1 1/2009 Hess et al.
2009/0007014 A1 1/2009 Coomer et al.
2009/0012534 A1 1/2009 Madhani et al.
2009/0015195 A1 1/2009 Loth-Krausser
2009/0020958 A1 1/2009 Soul
2009/0030437 A1 1/2009 Houser et al.
2009/0043253 A1 2/2009 Podaima
2009/0048583 A1 2/2009 Williams et al.
2009/0048589 A1 2/2009 Takashino et al.
2009/0057369 A1 3/2009 Smith et al.
2009/0069806 A1 3/2009 De La Mora Levy et al.
2009/0076506 A1 3/2009 Baker
2009/0078736 A1 3/2009 Van Lue
2009/0081313 A1 3/2009 Aghion et al.
2009/0088659 A1 4/2009 Graham et al.
2009/0090763 A1 4/2009 Zemlok et al.
2009/0099579 A1 4/2009 Nentwick et al.
2009/0099876 A1 4/2009 Whitman
2009/0110533 A1 4/2009 Jinno
2009/0112234 A1 4/2009 Crainich et al.
2009/0114701 A1 5/2009 Zemlok et al.
2009/0118762 A1 5/2009 Crainch et al.
2009/0119011 A1 5/2009 Kondo et al.
2009/0120994 A1 5/2009 Murray et al.
2009/0131819 A1 5/2009 Ritchie et al.
2009/0132400 A1 5/2009 Conway
2009/0135280 A1 5/2009 Johnston et al.
2009/0138003 A1 5/2009 Deville et al.
2009/0143797 A1 6/2009 Smith et al.
2009/0143855 A1 6/2009 Weber et al.
2009/0149871 A9 6/2009 Kagan et al.
2009/0167548 A1 7/2009 Sugahara
2009/0171147 A1 7/2009 Lee et al.
2009/0177218 A1 7/2009 Young et al.
2009/0177226 A1 7/2009 Reinprecht et al.
2009/0181290 A1 7/2009 Baldwin et al.
2009/0188964 A1 7/2009 Orlov
2009/0192534 A1 7/2009 Ortiz et al.
2009/0198272 A1 8/2009 Kerver et al.
2009/0204108 A1 8/2009 Steffen
2009/0204109 A1 8/2009 Grove et al.
2009/0204126 A1 8/2009 Le
2009/0204925 A1 8/2009 Bhat et al.
2009/0206125 A1 8/2009 Huitema et al.
2009/0206126 A1 8/2009 Huitema et al.
2009/0206131 A1 8/2009 Weisenburgh, II et al.
2009/0206133 A1 8/2009 Morgan et al.
2009/0206137 A1 8/2009 Hall et al.
2009/0206139 A1 8/2009 Hall et al.
2009/0206141 A1 8/2009 Huitema et al.
2009/0206142 A1 8/2009 Huitema et al.
2009/0206143 A1 8/2009 Huitema et al.
2009/0221993 A1 9/2009 Sohi et al.
2009/0227834 A1 9/2009 Nakamoto et al.
2009/0234273 A1 9/2009 Intoccia et al.
2009/0236401 A1 9/2009 Cole et al.
2009/0242610 A1 10/2009 Shelton, IV et al.
2009/0246873 A1 10/2009 Yamamoto et al.
2009/0247368 A1 10/2009 Chiang
2009/0247901 A1 10/2009 Zimmer
2009/0248100 A1 10/2009 Vaisnys et al.
2009/0253959 A1 10/2009 Yoshie et al.
2009/0255974 A1 10/2009 Viola
2009/0261141 A1 10/2009 Stratton et al.
2009/0262078 A1 10/2009 Pizzi
2009/0264940 A1 10/2009 Beale et al.
2009/0270895 A1 10/2009 Churchill et al.
2009/0273353 A1 11/2009 Kroh et al.
2009/0277288 A1 11/2009 Doepker et al.
2009/0278406 A1 11/2009 Hoffman
2009/0281554 A1 11/2009 Viola
2009/0290016 A1 11/2009 Suda
2009/0292283 A1 11/2009 Odom
2009/0306639 A1 12/2009 Nevo et al.
2009/0308907 A1 12/2009 Nalagatla et al.
2009/0318557 A1 12/2009 Stockel
2009/0318936 A1 12/2009 Harris et al.

(56) **References Cited**

U.S. PATENT DOCUMENTS

2009/0325859 A1 12/2009 Ameer et al.
2010/0002013 A1 1/2010 Kagaya
2010/0005035 A1 1/2010 Carpenter et al.
2010/0006620 A1 1/2010 Sorrentino et al.
2010/0012703 A1 1/2010 Calabrese et al.
2010/0015104 A1 1/2010 Fraser et al.
2010/0016853 A1 1/2010 Burbank
2010/0016888 A1 1/2010 Calabrese et al.
2010/0017715 A1 1/2010 Balassanian
2010/0023024 A1 1/2010 Zeiner et al.
2010/0030233 A1 2/2010 Whitman et al.
2010/0030239 A1 2/2010 Viola et al.
2010/0032179 A1 2/2010 Hanspers et al.
2010/0036370 A1 2/2010 Mirel et al.
2010/0036441 A1 2/2010 Procter
2010/0051668 A1 3/2010 Milliman et al.
2010/0057118 A1 3/2010 Dietz et al.
2010/0065604 A1 3/2010 Weng
2010/0069833 A1 3/2010 Wenderow et al.
2010/0069942 A1 3/2010 Shelton, IV
2010/0076483 A1 3/2010 Imuta
2010/0076489 A1 3/2010 Stopek et al.
2010/0081883 A1 4/2010 Murray et al.
2010/0094312 A1 4/2010 Ruiz Morales et al.
2010/0094340 A1 4/2010 Stopek et al.
2010/0094400 A1 4/2010 Bolduc et al.
2010/0100123 A1 4/2010 Bennett
2010/0100124 A1 4/2010 Calabrese et al.
2010/0106167 A1 4/2010 Boulnois et al.
2010/0116519 A1 5/2010 Gareis
2010/0122339 A1 5/2010 Boccacci
2010/0125786 A1 5/2010 Ozawa et al.
2010/0133317 A1 6/2010 Shelton, IV et al.
2010/0137990 A1 6/2010 Apatsidis et al.
2010/0138659 A1 6/2010 Carmichael et al.
2010/0145146 A1 6/2010 Melder
2010/0147921 A1 6/2010 Olson
2010/0147922 A1 6/2010 Olson
2010/0159435 A1 6/2010 Mueller et al.
2010/0168741 A1 7/2010 Sanai et al.
2010/0179022 A1 7/2010 Shirokoshi
2010/0180711 A1 7/2010 Kilibarda et al.
2010/0187285 A1 7/2010 Harris et al.
2010/0191255 A1 7/2010 Crainich et al.
2010/0191262 A1 7/2010 Harris et al.
2010/0191292 A1 7/2010 DeMeo et al.
2010/0193566 A1 8/2010 Scheib et al.
2010/0194541 A1 8/2010 Stevenson et al.
2010/0198159 A1 8/2010 Voss et al.
2010/0204717 A1 8/2010 Knodel
2010/0204721 A1 8/2010 Young et al.
2010/0217281 A1 8/2010 Matsuoka et al.
2010/0222901 A1 9/2010 Swayze et al.
2010/0228250 A1 9/2010 Brogna
2010/0234687 A1 9/2010 Azarbarzin et al.
2010/0241115 A1 9/2010 Benamou et al.
2010/0241137 A1 9/2010 Doyle et al.
2010/0245102 A1 9/2010 Yokoi
2010/0249497 A1 9/2010 Peine et al.
2010/0249947 A1 9/2010 Lesh et al.
2010/0256675 A1 10/2010 Romans
2010/0258327 A1 10/2010 Esenwein et al.
2010/0267525 A1 10/2010 Tanner
2010/0267662 A1 10/2010 Fielder et al.
2010/0274160 A1 10/2010 Yachi et al.
2010/0291184 A1 11/2010 Clark et al.
2010/0292540 A1 11/2010 Hess et al.
2010/0298636 A1 11/2010 Castro et al.
2010/0301097 A1 12/2010 Scirica et al.
2010/0310623 A1 12/2010 Laurencin et al.
2010/0312261 A1 12/2010 Suzuki et al.
2010/0318085 A1 12/2010 Austin et al.
2010/0325568 A1 12/2010 Pedersen et al.
2010/0327041 A1 12/2010 Milliman et al.
2010/0331856 A1 12/2010 Carlson et al.
2011/0006101 A1 1/2011 Hall et al.
2011/0009694 A1 1/2011 Schultz et al.
2011/0011916 A1 1/2011 Levine
2011/0016960 A1 1/2011 Debrailly
2011/0021871 A1 1/2011 Berkelaar
2011/0022032 A1 1/2011 Zemlok et al.
2011/0024477 A1 2/2011 Hall
2011/0024478 A1 2/2011 Shelton, IV
2011/0025311 A1 2/2011 Chauvin et al.
2011/0028991 A1 2/2011 Ikeda et al.
2011/0029270 A1 2/2011 Mueglitz
2011/0036891 A1 2/2011 Zemlok et al.
2011/0046667 A1 2/2011 Culligan et al.
2011/0052660 A1 3/2011 Yang et al.
2011/0056717 A1 3/2011 Herisse
2011/0060363 A1 3/2011 Hess et al.
2011/0066156 A1 3/2011 McGahan et al.
2011/0082538 A1 4/2011 Dahlgren et al.
2011/0087276 A1 4/2011 Bedi et al.
2011/0088921 A1 4/2011 Forgues et al.
2011/0091515 A1 4/2011 Zilberman et al.
2011/0095064 A1 4/2011 Taylor et al.
2011/0095067 A1 4/2011 Ohdaira
2011/0101069 A1 5/2011 Bombard et al.
2011/0101794 A1 5/2011 Schroeder et al.
2011/0112517 A1 5/2011 Peine et al.
2011/0112530 A1 5/2011 Keller
2011/0114697 A1 5/2011 Baxter, III et al.
2011/0118708 A1 5/2011 Burbank et al.
2011/0118754 A1 5/2011 Dachs, II et al.
2011/0125149 A1 5/2011 El-Galley et al.
2011/0125176 A1 5/2011 Yates et al.
2011/0127945 A1 6/2011 Yoneda
2011/0129706 A1 6/2011 Takahashi et al.
2011/0144764 A1 6/2011 Bagga et al.
2011/0147433 A1 6/2011 Shelton, IV et al.
2011/0160725 A1 6/2011 Kabaya et al.
2011/0163146 A1 7/2011 Ortiz et al.
2011/0172495 A1 7/2011 Armstrong
2011/0174861 A1 7/2011 Shelton, IV et al.
2011/0192882 A1 8/2011 Hess et al.
2011/0198381 A1 8/2011 McCardle et al.
2011/0199225 A1 8/2011 Touchberry et al.
2011/0218400 A1 9/2011 Ma et al.
2011/0218550 A1 9/2011 Ma
2011/0220381 A1 9/2011 Friese et al.
2011/0224543 A1 9/2011 Johnson et al.
2011/0225105 A1 9/2011 Scholer et al.
2011/0230713 A1 9/2011 Kleemann et al.
2011/0235168 A1 9/2011 Sander
2011/0238044 A1 9/2011 Main et al.
2011/0241597 A1 10/2011 Zhu et al.
2011/0251606 A1 10/2011 Kerr
2011/0256266 A1 10/2011 Orme et al.
2011/0271186 A1 11/2011 Owens
2011/0275901 A1 11/2011 Shelton, IV
2011/0276083 A1 11/2011 Shelton, IV et al.
2011/0278035 A1 11/2011 Chen
2011/0278343 A1 11/2011 Knodel et al.
2011/0279268 A1 11/2011 Konishi et al.
2011/0285507 A1 11/2011 Nelson
2011/0290856 A1 12/2011 Shelton, IV et al.
2011/0290858 A1 12/2011 Whitman et al.
2011/0292258 A1 12/2011 Adler et al.
2011/0293690 A1 12/2011 Griffin et al.
2011/0295295 A1 12/2011 Shelton, IV et al.
2011/0295299 A1 12/2011 Braithwaite et al.
2011/0313894 A1 12/2011 Dye et al.
2011/0315413 A1 12/2011 Fisher et al.
2012/0004636 A1 1/2012 Lo
2012/0007442 A1 1/2012 Rhodes et al.
2012/0008880 A1 1/2012 Toth
2012/0010615 A1 1/2012 Cummings et al.
2012/0016239 A1 1/2012 Barthe et al.
2012/0016413 A1 1/2012 Timm et al.
2012/0016467 A1 1/2012 Chen et al.
2012/0029272 A1 2/2012 Shelton, IV et al.
2012/0029550 A1 2/2012 Forsell
2012/0033360 A1 2/2012 Hsu

(56) **References Cited**

U.S. PATENT DOCUMENTS

2012/0059286 A1 3/2012 Hastings et al.
2012/0064483 A1 3/2012 Lint et al.
2012/0074200 A1 3/2012 Schmid et al.
2012/0078243 A1 3/2012 Worrell et al.
2012/0078244 A1 3/2012 Worrell et al.
2012/0080336 A1 4/2012 Shelton, IV et al.
2012/0080344 A1 4/2012 Shelton, IV
2012/0080478 A1 4/2012 Morgan et al.
2012/0080491 A1 4/2012 Shelton, IV et al.
2012/0080498 A1 4/2012 Shelton, IV et al.
2012/0086276 A1 4/2012 Sawyers
2012/0095458 A1 4/2012 Cybulski et al.
2012/0101488 A1 4/2012 Aldridge et al.
2012/0109186 A1 5/2012 Parrott et al.
2012/0116261 A1 5/2012 Mumaw et al.
2012/0116262 A1 5/2012 Houser et al.
2012/0116263 A1 5/2012 Houser et al.
2012/0116265 A1 5/2012 Houser et al.
2012/0116266 A1 5/2012 Houser et al.
2012/0116381 A1 5/2012 Houser et al.
2012/0118595 A1 5/2012 Pellenc
2012/0123463 A1 5/2012 Jacobs
2012/0125792 A1 5/2012 Cassivi
2012/0130217 A1 5/2012 Kauphusman et al.
2012/0132286 A1 5/2012 Lim et al.
2012/0132663 A1 5/2012 Kasvikis et al.
2012/0143175 A1 6/2012 Hermann et al.
2012/0168487 A1 7/2012 Holsten et al.
2012/0171539 A1 7/2012 Rejman et al.
2012/0175398 A1 7/2012 Sandborn et al.
2012/0190964 A1 7/2012 Hyde et al.
2012/0193398 A1 8/2012 Williams et al.
2012/0197239 A1 8/2012 Smith et al.
2012/0197272 A1 8/2012 Oray et al.
2012/0203213 A1 8/2012 Kimball et al.
2012/0211542 A1 8/2012 Racenet
2012/0220990 A1 8/2012 Mckenzie et al.
2012/0233298 A1 9/2012 Verbandt et al.
2012/0234895 A1 9/2012 O'Connor et al.
2012/0234897 A1 9/2012 Shelton, IV et al.
2012/0239068 A1 9/2012 Morris et al.
2012/0241494 A1 9/2012 Marczyk
2012/0241499 A1 9/2012 Baxter, III et al.
2012/0241503 A1 9/2012 Baxter, III et al.
2012/0241505 A1 9/2012 Alexander, III et al.
2012/0248169 A1 10/2012 Widenhouse et al.
2012/0251861 A1 10/2012 Liang et al.
2012/0253328 A1 10/2012 Cunningham et al.
2012/0256494 A1 10/2012 Kesler et al.
2012/0271327 A1 10/2012 West et al.
2012/0283707 A1 11/2012 Giordano et al.
2012/0286019 A1 11/2012 Hueil et al.
2012/0289811 A1 11/2012 Viola et al.
2012/0289979 A1 11/2012 Eskaros et al.
2012/0292367 A1 11/2012 Morgan et al.
2012/0296316 A1 11/2012 Imuta
2012/0296342 A1 11/2012 Haglund Wendelschafer
2012/0298722 A1 11/2012 Hess et al.
2012/0301498 A1 11/2012 Altreuter et al.
2012/0310254 A1 12/2012 Manzo et al.
2012/0312861 A1 12/2012 Gurumurthy et al.
2012/0316424 A1 12/2012 Stopek
2012/0330285 A1 12/2012 Hartoumbekis et al.
2012/0330329 A1 12/2012 Harris et al.
2013/0006227 A1 1/2013 Takashino
2013/0008937 A1 1/2013 Viola
2013/0012983 A1 1/2013 Kleyman
2013/0018400 A1 1/2013 Milton et al.
2013/0020375 A1 1/2013 Shelton, IV et al.
2013/0020376 A1 1/2013 Shelton, IV et al.
2013/0023861 A1 1/2013 Shelton, IV et al.
2013/0023910 A1 1/2013 Solomon et al.
2013/0026208 A1 1/2013 Shelton, IV et al.
2013/0026210 A1 1/2013 Shelton, IV et al.
2013/0030462 A1 1/2013 Keating et al.
2013/0041292 A1 2/2013 Cunningham
2013/0057162 A1 3/2013 Pollischansky
2013/0068816 A1 3/2013 Mandakolathur Vasudevan et al.
2013/0069088 A1 3/2013 Speck et al.
2013/0075447 A1 3/2013 Weisenburgh, II et al.
2013/0087597 A1 4/2013 Shelton, IV et al.
2013/0090534 A1 4/2013 Burns et al.
2013/0096568 A1 4/2013 Justis
2013/0098970 A1 4/2013 Racenet et al.
2013/0106352 A1 5/2013 Nagamine
2013/0112729 A1 5/2013 Beardsley et al.
2013/0116669 A1 5/2013 Shelton, IV et al.
2013/0123816 A1 5/2013 Hodgkinson et al.
2013/0126202 A1 5/2013 Oomori et al.
2013/0131476 A1 5/2013 Siu et al.
2013/0131651 A1 5/2013 Strobl et al.
2013/0136969 A1 5/2013 Yasui et al.
2013/0153639 A1 6/2013 Hodgkinson et al.
2013/0153641 A1 6/2013 Shelton, IV et al.
2013/0158390 A1 6/2013 Tan et al.
2013/0162198 A1 6/2013 Yokota et al.
2013/0165908 A1 6/2013 Purdy et al.
2013/0169217 A1 7/2013 Watanabe et al.
2013/0172713 A1 7/2013 Kirschenman
2013/0172878 A1 7/2013 Smith
2013/0172929 A1* 7/2013 Hess A61B 17/07292
227/175.1
2013/0175315 A1 7/2013 Milliman
2013/0175317 A1 7/2013 Yates et al.
2013/0183769 A1 7/2013 Tajima
2013/0211244 A1 8/2013 Nathaniel
2013/0214025 A1 8/2013 Zemlok et al.
2013/0215449 A1 8/2013 Yamasaki
2013/0231681 A1 9/2013 Robinson et al.
2013/0233906 A1 9/2013 Hess et al.
2013/0238021 A1 9/2013 Gross et al.
2013/0248578 A1 9/2013 Arteaga Gonzalez
2013/0253480 A1 9/2013 Kimball et al.
2013/0256373 A1 10/2013 Schmid et al.
2013/0256380 A1 10/2013 Schmid et al.
2013/0267950 A1 10/2013 Rosa et al.
2013/0267978 A1 10/2013 Trissel
2013/0270322 A1 10/2013 Scheib et al.
2013/0277410 A1 10/2013 Fernandez et al.
2013/0284792 A1 10/2013 Ma
2013/0289565 A1 10/2013 Hassler, Jr.
2013/0293353 A1 11/2013 McPherson et al.
2013/0303845 A1 11/2013 Skula et al.
2013/0304084 A1 11/2013 Beira et al.
2013/0306704 A1 11/2013 Balbierz et al.
2013/0327552 A1 12/2013 Lovelass et al.
2013/0333910 A1 12/2013 Tanimoto et al.
2013/0334280 A1 12/2013 Krehel et al.
2013/0334283 A1 12/2013 Swayze et al.
2013/0334285 A1 12/2013 Swayze et al.
2013/0341374 A1 12/2013 Shelton, IV et al.
2014/0001231 A1 1/2014 Shelton, IV et al.
2014/0001234 A1 1/2014 Shelton, IV et al.
2014/0002322 A1 1/2014 Kanome et al.
2014/0005550 A1 1/2014 Lu et al.
2014/0005640 A1 1/2014 Shelton, IV et al.
2014/0005678 A1 1/2014 Shelton, IV et al.
2014/0005702 A1 1/2014 Timm et al.
2014/0005718 A1 1/2014 Shelton, IV et al.
2014/0008289 A1 1/2014 Williams et al.
2014/0014704 A1 1/2014 Onukuri et al.
2014/0014705 A1 1/2014 Baxter, III
2014/0014707 A1 1/2014 Onukuri et al.
2014/0018832 A1 1/2014 Shelton, IV
2014/0022283 A1 1/2014 Chan et al.
2014/0039549 A1 2/2014 Belsky et al.
2014/0041191 A1 2/2014 Knodel
2014/0048580 A1 2/2014 Merchant et al.
2014/0069240 A1 3/2014 Dauvin et al.
2014/0078715 A1 3/2014 Pickard et al.
2014/0081176 A1 3/2014 Hassan
2014/0088614 A1 3/2014 Blumenkranz
2014/0088639 A1 3/2014 Bartels et al.
2014/0094681 A1 4/2014 Valentine et al.

(56) **References Cited**

U.S. PATENT DOCUMENTS

2014/0100558 A1 4/2014 Schmitz et al.
2014/0107697 A1 4/2014 Patani et al.
2014/0110453 A1 4/2014 Wingardner et al.
2014/0115229 A1 4/2014 Kothamasu et al.
2014/0131418 A1 5/2014 Kostrzewski
2014/0131419 A1 5/2014 Bettuchi
2014/0135832 A1 5/2014 Park et al.
2014/0148803 A1 5/2014 Taylor
2014/0151433 A1 6/2014 Shelton, IV et al.
2014/0155916 A1 6/2014 Hodgkinson et al.
2014/0158747 A1 6/2014 Measamer et al.
2014/0166723 A1 6/2014 Beardsley et al.
2014/0166724 A1 6/2014 Schellin et al.
2014/0166725 A1 6/2014 Schellin et al.
2014/0166726 A1 6/2014 Schellin et al.
2014/0175147 A1 6/2014 Manoux et al.
2014/0175150 A1 6/2014 Shelton, IV et al.
2014/0175152 A1 6/2014 Hess et al.
2014/0181710 A1 6/2014 Baalu et al.
2014/0183244 A1 7/2014 Duque et al.
2014/0188091 A1 7/2014 Vidal et al.
2014/0188101 A1 7/2014 Bales, Jr. et al.
2014/0188159 A1 7/2014 Steege
2014/0207124 A1 7/2014 Aldridge et al.
2014/0209658 A1 7/2014 Skalla et al.
2014/0224857 A1 8/2014 Schmid
2014/0228632 A1 8/2014 Sholev et al.
2014/0228867 A1 8/2014 Thomas et al.
2014/0239047 A1 8/2014 Hodgkinson et al.
2014/0243865 A1 8/2014 Swayze et al.
2014/0246475 A1 9/2014 Hall et al.
2014/0248167 A1 9/2014 Sugimoto et al.
2014/0249557 A1 9/2014 Koch, Jr. et al.
2014/0249573 A1 9/2014 Arav
2014/0262408 A1 9/2014 Woodard
2014/0263541 A1 9/2014 Leimbach et al.
2014/0263552 A1 9/2014 Hall et al.
2014/0263558 A1 9/2014 Hausen et al.
2014/0276730 A1 9/2014 Boudreaux et al.
2014/0276776 A1 9/2014 Parihar et al.
2014/0284371 A1 9/2014 Morgan et al.
2014/0287703 A1 9/2014 Herbsommer et al.
2014/0288460 A1 9/2014 Ouyang et al.
2014/0291379 A1 10/2014 Schellin et al.
2014/0291383 A1 10/2014 Spivey et al.
2014/0299648 A1 10/2014 Shelton, IV et al.
2014/0303645 A1 10/2014 Morgan et al.
2014/0303660 A1 10/2014 Boyden et al.
2014/0330161 A1 11/2014 Swayze et al.
2014/0330298 A1 11/2014 Arshonsky et al.
2014/0330579 A1 11/2014 Cashman et al.
2014/0358163 A1 12/2014 Farin et al.
2014/0367445 A1 12/2014 Ingmanson et al.
2014/0371764 A1 12/2014 Oyola et al.
2014/0373003 A1 12/2014 Grez et al.
2014/0374130 A1 12/2014 Nakamura et al.
2014/0374465 A1 12/2014 Cole et al.
2014/0378950 A1 12/2014 Chiu
2015/0001272 A1 1/2015 Sniffin et al.
2015/0002089 A1 1/2015 Rejman et al.
2015/0022012 A1 1/2015 Kim et al.
2015/0025549 A1 1/2015 Kilroy et al.
2015/0025571 A1 1/2015 Suzuki et al.
2015/0034697 A1 2/2015 Mastri et al.
2015/0039010 A1 2/2015 Beardsley et al.
2015/0053737 A1 2/2015 Leimbach et al.
2015/0053743 A1 2/2015 Yates et al.
2015/0053746 A1 2/2015 Shelton, IV et al.
2015/0053748 A1 2/2015 Yates et al.
2015/0060516 A1 3/2015 Collings et al.
2015/0060519 A1 3/2015 Shelton, IV et al.
2015/0060520 A1 3/2015 Shelton, IV et al.
2015/0060521 A1 3/2015 Weisenburgh, II et al.
2015/0066000 A1 3/2015 An et al.
2015/0067582 A1 3/2015 Donnelly et al.
2015/0076208 A1 3/2015 Shelton, IV
2015/0076209 A1 3/2015 Shelton, IV et al.
2015/0076210 A1 3/2015 Shelton, IV et al.
2015/0076211 A1 3/2015 Irka et al.
2015/0080883 A1 3/2015 Haverkost et al.
2015/0082624 A1 3/2015 Craig et al.
2015/0083781 A1 3/2015 Giordano et al.
2015/0087952 A1 3/2015 Albert et al.
2015/0088127 A1 3/2015 Craig et al.
2015/0088547 A1 3/2015 Balram et al.
2015/0090760 A1 4/2015 Giordano et al.
2015/0090762 A1 4/2015 Giordano et al.
2015/0127021 A1 5/2015 Harris et al.
2015/0134077 A1 5/2015 Shelton, IV et al.
2015/0150620 A1 6/2015 Miyamoto et al.
2015/0173749 A1 6/2015 Shelton, IV et al.
2015/0173756 A1 6/2015 Baxter, III et al.
2015/0173789 A1 6/2015 Baxter, III et al.
2015/0196295 A1 7/2015 Shelton, IV et al.
2015/0196299 A1 7/2015 Swayze et al.
2015/0201918 A1 7/2015 Kumar et al.
2015/0201932 A1 7/2015 Swayze et al.
2015/0201936 A1 7/2015 Swayze et al.
2015/0201937 A1 7/2015 Swayze et al.
2015/0201938 A1 7/2015 Swayze et al.
2015/0201939 A1 7/2015 Swayze et al.
2015/0201940 A1 7/2015 Swayze et al.
2015/0201941 A1 7/2015 Swayze et al.
2015/0209045 A1 7/2015 Hodgkinson et al.
2015/0216605 A1 8/2015 Baldwin
2015/0222212 A1 8/2015 Iwata
2015/0223868 A1 8/2015 Brandt et al.
2015/0230697 A1 8/2015 Phee et al.
2015/0230794 A1 8/2015 Wellman et al.
2015/0230861 A1 8/2015 Woloszko et al.
2015/0231409 A1 8/2015 Racenet et al.
2015/0238118 A1 8/2015 Legassey et al.
2015/0272557 A1 10/2015 Overmyer et al.
2015/0272571 A1 10/2015 Leimbach et al.
2015/0272580 A1 10/2015 Leimbach et al.
2015/0272582 A1 10/2015 Leimbach et al.
2015/0272606 A1 10/2015 Nobis
2015/0297200 A1 10/2015 Fitzsimmons et al.
2015/0297222 A1 10/2015 Huitema et al.
2015/0297223 A1 10/2015 Huitema et al.
2015/0297225 A1 10/2015 Huitema et al.
2015/0297824 A1 10/2015 Cabiri et al.
2015/0303417 A1 10/2015 Koeder et al.
2015/0305743 A1 10/2015 Casasanta et al.
2015/0313594 A1 11/2015 Shelton, IV et al.
2015/0324317 A1 11/2015 Collins et al.
2015/0352699 A1 12/2015 Sakai et al.
2015/0366585 A1 12/2015 Lemay et al.
2015/0367497 A1 12/2015 Ito et al.
2015/0372265 A1 12/2015 Morisaku et al.
2015/0374372 A1 12/2015 Zergiebel et al.
2015/0374378 A1 12/2015 Giordano et al.
2016/0000437 A1 1/2016 Giordano et al.
2016/0000452 A1 1/2016 Yates et al.
2016/0000453 A1 1/2016 Yates et al.
2016/0029998 A1 2/2016 Brister et al.
2016/0030042 A1 2/2016 Heinrich et al.
2016/0030043 A1 2/2016 Fanelli et al.
2016/0030076 A1 2/2016 Faller et al.
2016/0051316 A1 2/2016 Boudreaux
2016/0066913 A1 3/2016 Swayze et al.
2016/0069449 A1 3/2016 Kanai et al.
2016/0074035 A1 3/2016 Whitman et al.
2016/0074040 A1 3/2016 Widenhouse et al.
2016/0081678 A1 3/2016 Kappel et al.
2016/0082161 A1 3/2016 Zilberman et al.
2016/0089175 A1 3/2016 Hibner et al.
2016/0100838 A1 4/2016 Beaupré et al.
2016/0118201 A1 4/2016 Nicholas et al.
2016/0132026 A1 5/2016 Wingardner et al.
2016/0135835 A1 5/2016 Onuma
2016/0135895 A1 5/2016 Faasse et al.
2016/0139666 A1 5/2016 Rubin et al.
2016/0174969 A1 6/2016 Kerr et al.

(56) **References Cited**

U.S. PATENT DOCUMENTS

2016/0174983 A1 6/2016 Shelton, IV et al.
2016/0175021 A1 6/2016 Hassler, Jr.
2016/0183939 A1 6/2016 Shelton, IV et al.
2016/0183943 A1 6/2016 Shelton, IV
2016/0183944 A1 6/2016 Swensgard et al.
2016/0192927 A1 7/2016 Kostrzewski
2016/0192960 A1 7/2016 Bueno et al.
2016/0199063 A1 7/2016 Mandakolathur Vasudevan et al.
2016/0199956 A1 7/2016 Shelton, IV et al.
2016/0220150 A1 8/2016 Sharonov
2016/0235494 A1 8/2016 Shelton, IV et al.
2016/0242783 A1 8/2016 Shelton, IV et al.
2016/0242855 A1 8/2016 Fichtinger et al.
2016/0249910 A1 9/2016 Shelton, IV et al.
2016/0249922 A1 9/2016 Morgan et al.
2016/0249929 A1 9/2016 Cappola et al.
2016/0256159 A1 9/2016 Pinjala et al.
2016/0256184 A1 9/2016 Shelton, IV et al.
2016/0256221 A1 9/2016 Smith
2016/0256229 A1 9/2016 Morgan et al.
2016/0262745 A1 9/2016 Morgan et al.
2016/0262921 A1 9/2016 Balbierz et al.
2016/0270781 A1 9/2016 Scirica
2016/0287265 A1 10/2016 Macdonald et al.
2016/0287279 A1 10/2016 Bovay et al.
2016/0302820 A1 10/2016 Hibner et al.
2016/0310143 A1 10/2016 Bettuchi
2016/0314716 A1 10/2016 Grubbs
2016/0314717 A1 10/2016 Grubbs
2016/0345972 A1 12/2016 Beardsley et al.
2016/0367122 A1 12/2016 Ichimura et al.
2016/0374669 A1 12/2016 Overmyer et al.
2016/0374716 A1 12/2016 Kessler
2017/0000549 A1 1/2017 Gilbert et al.
2017/0007234 A1 1/2017 Chin et al.
2017/0007244 A1 1/2017 Shelton, IV et al.
2017/0007245 A1 1/2017 Shelton, IV et al.
2017/0007347 A1 1/2017 Jaworek et al.
2017/0020616 A1 1/2017 Vale et al.
2017/0035419 A1 2/2017 Decker et al.
2017/0055819 A1 3/2017 Hansen et al.
2017/0055980 A1 3/2017 Vendely et al.
2017/0056008 A1 3/2017 Shelton, IV et al.
2017/0056016 A1 3/2017 Barton et al.
2017/0056018 A1 3/2017 Zeiner et al.
2017/0066054 A1 3/2017 Birky
2017/0079642 A1 3/2017 Overmyer et al.
2017/0086829 A1 3/2017 Vendely et al.
2017/0086830 A1 3/2017 Yates et al.
2017/0086842 A1 3/2017 Shelton, IV et al.
2017/0086930 A1 3/2017 Thompson et al.
2017/0086932 A1 3/2017 Auld et al.
2017/0095922 A1 4/2017 Licht et al.
2017/0105727 A1 4/2017 Scheib et al.
2017/0105733 A1 4/2017 Scheib et al.
2017/0105786 A1 4/2017 Scheib et al.
2017/0106302 A1 4/2017 Cummings et al.
2017/0135711 A1 5/2017 Overmyer et al.
2017/0135717 A1 5/2017 Boudreaux et al.
2017/0135747 A1 5/2017 Broderick et al.
2017/0143336 A1 5/2017 Shah et al.
2017/0168187 A1 6/2017 Calderoni et al.
2017/0172382 A1 6/2017 Nir et al.
2017/0172549 A1 6/2017 Smaby et al.
2017/0172662 A1 6/2017 Panescu et al.
2017/0181803 A1 6/2017 Mayer-Ullmann et al.
2017/0182195 A1 6/2017 Wagner
2017/0182211 A1 6/2017 Raxworthy et al.
2017/0196558 A1 7/2017 Morgan et al.
2017/0196649 A1 7/2017 Yates et al.
2017/0202605 A1 7/2017 Shelton, IV et al.
2017/0202607 A1 7/2017 Shelton, IV et al.
2017/0202770 A1 7/2017 Friedrich et al.
2017/0224332 A1 8/2017 Hunter et al.
2017/0231628 A1 8/2017 Shelton, IV et al.
2017/0231629 A1 8/2017 Stopek et al.
2017/0238962 A1 8/2017 Hansen et al.
2017/0242455 A1 8/2017 Dickens
2017/0245949 A1 8/2017 Randle
2017/0249431 A1 8/2017 Shelton, IV et al.
2017/0252060 A1 9/2017 Ellingson et al.
2017/0255799 A1 9/2017 Zhao et al.
2017/0262110 A1 9/2017 Polishchuk et al.
2017/0265774 A1 9/2017 Johnson et al.
2017/0281186 A1 10/2017 Shelton, IV et al.
2017/0296173 A1 10/2017 Shelton, IV et al.
2017/0296185 A1 10/2017 Swensgard et al.
2017/0296213 A1 10/2017 Swensgard et al.
2017/0303984 A1 10/2017 Malackowski
2017/0312042 A1 11/2017 Giordano et al.
2017/0319047 A1 11/2017 Poulsen et al.
2017/0319201 A1 11/2017 Morgan et al.
2017/0333034 A1 11/2017 Morgan et al.
2017/0333035 A1 11/2017 Morgan et al.
2017/0348010 A1 12/2017 Chiang
2017/0348043 A1 12/2017 Wang et al.
2017/0354413 A1 12/2017 Chen et al.
2017/0358052 A1 12/2017 Yuan
2017/0360441 A1 12/2017 Sgroi
2018/0008265 A1 1/2018 Hatanaka et al.
2018/0042610 A1 2/2018 Sgroi, Jr.
2018/0042689 A1 2/2018 Mozdzierz et al.
2018/0049738 A1 2/2018 Meloul et al.
2018/0049794 A1 2/2018 Swayze et al.
2018/0051780 A1 2/2018 Shelton, IV et al.
2018/0055501 A1 3/2018 Zemlok et al.
2018/0067004 A1 3/2018 Sgroi, Jr.
2018/0085117 A1 3/2018 Shelton, IV et al.
2018/0085120 A1 3/2018 Viola
2018/0092710 A1 4/2018 Bosisio et al.
2018/0114591 A1 4/2018 Pribanic et al.
2018/0116658 A1 5/2018 Aronhalt, IV et al.
2018/0125481 A1 5/2018 Yates et al.
2018/0125487 A1 5/2018 Beardsley
2018/0125488 A1 5/2018 Morgan et al.
2018/0125594 A1 5/2018 Beardsley
2018/0132849 A1 5/2018 Miller et al.
2018/0132850 A1 5/2018 Leimbach et al.
2018/0132926 A1 5/2018 Asher et al.
2018/0132952 A1 5/2018 Spivey et al.
2018/0133521 A1 5/2018 Frushour et al.
2018/0140299 A1 5/2018 Weaner et al.
2018/0146960 A1 5/2018 Shelton, IV et al.
2018/0153542 A1 6/2018 Shelton, IV et al.
2018/0153634 A1 6/2018 Zemlok et al.
2018/0161034 A1 6/2018 Scheib et al.
2018/0168572 A1 6/2018 Burbank
2018/0168574 A1 6/2018 Robinson et al.
2018/0168575 A1 6/2018 Simms et al.
2018/0168577 A1 6/2018 Aronhalt et al.
2018/0168579 A1 6/2018 Aronhalt et al.
2018/0168598 A1 6/2018 Shelton, IV et al.
2018/0168608 A1 6/2018 Shelton, IV et al.
2018/0168609 A1 6/2018 Fanelli et al.
2018/0168615 A1 6/2018 Shelton, IV et al.
2018/0168618 A1 6/2018 Scott et al.
2018/0168619 A1 6/2018 Scott et al.
2018/0168623 A1 6/2018 Simms et al.
2018/0168625 A1 6/2018 Posada et al.
2018/0168633 A1 6/2018 Shelton, IV et al.
2018/0168647 A1 6/2018 Shelton, IV et al.
2018/0168648 A1 6/2018 Shelton, IV et al.
2018/0168650 A1 6/2018 Shelton, IV et al.
2018/0168754 A1 6/2018 Overmyer
2018/0168756 A1 6/2018 Liao et al.
2018/0206904 A1 7/2018 Felder et al.
2018/0228490 A1 8/2018 Richard et al.
2018/0231111 A1 8/2018 Mika et al.
2018/0231475 A1 8/2018 Brown et al.
2018/0235609 A1 8/2018 Harris et al.
2018/0235617 A1 8/2018 Shelton, IV et al.
2018/0235618 A1 8/2018 Kostrzewski
2018/0235626 A1 8/2018 Shelton, IV et al.
2018/0236181 A1 8/2018 Marlin et al.

(56) **References Cited**

U.S. PATENT DOCUMENTS

2018/0242970 A1 8/2018 Mozdzierz
2018/0247711 A1 8/2018 Terry
2018/0250002 A1 9/2018 Eschbach
2018/0271553 A1 9/2018 Worrell
2018/0271604 A1 9/2018 Grout et al.
2018/0273597 A1 9/2018 Stimson
2018/0279994 A1 10/2018 Schaer et al.
2018/0280073 A1 10/2018 Sanai et al.
2018/0289371 A1 10/2018 Wang et al.
2018/0296216 A1 10/2018 Shelton, IV et al.
2018/0296290 A1 10/2018 Namiki et al.
2018/0317905 A1 11/2018 Olson et al.
2018/0317915 A1 11/2018 McDonald, II
2018/0325514 A1 11/2018 Harris et al.
2018/0333169 A1 11/2018 Leimbach et al.
2018/0360446 A1 12/2018 Shelton, IV et al.
2018/0360456 A1 12/2018 Shelton, IV et al.
2018/0368066 A1 12/2018 Howell et al.
2018/0368844 A1 12/2018 Bakos et al.
2018/0372806 A1 12/2018 Laughery et al.
2018/0375165 A1 12/2018 Shelton, IV et al.
2019/0000459 A1 1/2019 Shelton, IV et al.
2019/0000461 A1 1/2019 Shelton, IV et al.
2019/0000475 A1 1/2019 Shelton, IV et al.
2019/0000477 A1 1/2019 Shelton, IV et al.
2019/0000481 A1 1/2019 Harris et al.
2019/0000535 A1 1/2019 Messerly et al.
2019/0000536 A1 1/2019 Yates et al.
2019/0006047 A1 1/2019 Gorek et al.
2019/0008515 A1 1/2019 Beardsley et al.
2019/0015102 A1 1/2019 Baber et al.
2019/0015165 A1 1/2019 Giordano et al.
2019/0017311 A1 1/2019 McGettrick et al.
2019/0021733 A1 1/2019 Burbank
2019/0029682 A1 1/2019 Huitema et al.
2019/0029701 A1 1/2019 Shelton, IV et al.
2019/0038281 A1 2/2019 Shelton, IV et al.
2019/0038283 A1 2/2019 Shelton, IV et al.
2019/0038285 A1 2/2019 Mozdzierz
2019/0059986 A1 2/2019 Shelton, IV et al.
2019/0076143 A1 3/2019 Smith
2019/0090871 A1 3/2019 Shelton, IV et al.
2019/0091183 A1 3/2019 Tomat et al.
2019/0104919 A1 4/2019 Shelton, IV et al.
2019/0105035 A1 4/2019 Shelton, IV et al.
2019/0105036 A1 4/2019 Morgan et al.
2019/0105037 A1 4/2019 Morgan et al.
2019/0105039 A1 4/2019 Morgan et al.
2019/0105044 A1 4/2019 Shelton, IV et al.
2019/0110779 A1 4/2019 Gardner et al.
2019/0110791 A1 4/2019 Shelton, IV et al.
2019/0117224 A1 4/2019 Setser et al.
2019/0125320 A1 5/2019 Shelton, IV et al.
2019/0125336 A1 5/2019 Deck et al.
2019/0125338 A1 5/2019 Shelton, IV et al.
2019/0125342 A1 5/2019 Beardsley et al.
2019/0125344 A1 5/2019 DiNardo et al.
2019/0125361 A1 5/2019 Shelton, IV et al.
2019/0125377 A1 5/2019 Shelton, IV
2019/0125378 A1 5/2019 Shelton, IV et al.
2019/0125388 A1 5/2019 Shelton, IV et al.
2019/0125430 A1 5/2019 Shelton, IV et al.
2019/0125431 A1 5/2019 Shelton, IV et al.
2019/0125432 A1 5/2019 Shelton, IV et al.
2019/0125454 A1 5/2019 Stokes et al.
2019/0125476 A1 5/2019 Shelton, IV et al.
2019/0133422 A1 5/2019 Nakamura
2019/0133577 A1 5/2019 Weadock et al.
2019/0138770 A1 5/2019 Compaijen et al.
2019/0142423 A1 5/2019 Satti, III et al.
2019/0150925 A1 5/2019 Marczyk et al.
2019/0151029 A1 5/2019 Robinson
2019/0175847 A1 6/2019 Pocreva, III et al.
2019/0183502 A1 6/2019 Shelton, IV et al.
2019/0192146 A1 6/2019 Widenhouse et al.
2019/0192147 A1 6/2019 Shelton, IV et al.
2019/0192148 A1 6/2019 Shelton, IV et al.
2019/0192151 A1 6/2019 Shelton, IV et al.
2019/0192153 A1 6/2019 Shelton, IV et al.
2019/0192155 A1 6/2019 Shelton, IV et al.
2019/0192157 A1 6/2019 Scott et al.
2019/0200844 A1 7/2019 Shelton, IV et al.
2019/0200905 A1 7/2019 Shelton, IV et al.
2019/0200906 A1 7/2019 Shelton, IV et al.
2019/0200977 A1 7/2019 Shelton, IV et al.
2019/0200981 A1 7/2019 Harris et al.
2019/0200986 A1 7/2019 Shelton, IV et al.
2019/0200987 A1 7/2019 Shelton, IV et al.
2019/0200988 A1 7/2019 Shelton, IV
2019/0200989 A1 7/2019 Burbank et al.
2019/0200997 A1 7/2019 Shelton, IV et al.
2019/0200998 A1 7/2019 Shelton, IV et al.
2019/0201020 A1 7/2019 Shelton, IV et al.
2019/0201024 A1 7/2019 Shelton, IV et al.
2019/0201025 A1 7/2019 Shelton, IV et al.
2019/0201026 A1 7/2019 Shelton, IV et al.
2019/0201027 A1 7/2019 Shelton, IV et al.
2019/0201029 A1 7/2019 Shelton, IV et al.
2019/0201030 A1 7/2019 Shelton, IV et al.
2019/0201034 A1 7/2019 Shelton, IV et al.
2019/0201045 A1 7/2019 Yates et al.
2019/0201046 A1 7/2019 Shelton, IV et al.
2019/0201079 A1 7/2019 Shelton, IV et al.
2019/0201104 A1 7/2019 Shelton, IV et al.
2019/0201112 A1 7/2019 Wiener et al.
2019/0201113 A1 7/2019 Shelton, IV et al.
2019/0201115 A1 7/2019 Shelton, IV et al.
2019/0201118 A1 7/2019 Shelton, IV et al.
2019/0201136 A1 7/2019 Shelton, IV et al.
2019/0201139 A1 7/2019 Shelton, IV et al.
2019/0201140 A1 7/2019 Yates et al.
2019/0201142 A1 7/2019 Shelton, IV et al.
2019/0201158 A1 7/2019 Shelton, IV et al.
2019/0201594 A1 7/2019 Shelton, IV et al.
2019/0205001 A1 7/2019 Messerly et al.
2019/0205567 A1 7/2019 Shelton, IV et al.
2019/0206551 A1 7/2019 Yates et al.
2019/0206555 A1 7/2019 Morgan et al.
2019/0206561 A1 7/2019 Shelton, IV et al.
2019/0206564 A1 7/2019 Shelton, IV et al.
2019/0206569 A1 7/2019 Shelton, IV et al.
2019/0209172 A1 7/2019 Shelton, IV et al.
2019/0209247 A1 7/2019 Giordano et al.
2019/0209248 A1 7/2019 Giordano et al.
2019/0209249 A1 7/2019 Giordano et al.
2019/0209250 A1 7/2019 Giordano et al.
2019/0216558 A1 7/2019 Giordano et al.
2019/0239873 A1 8/2019 Laurent et al.
2019/0247048 A1 8/2019 Gasparovich et al.
2019/0261982 A1 8/2019 Holsten
2019/0261983 A1 8/2019 Granger et al.
2019/0261984 A1 8/2019 Nelson et al.
2019/0261987 A1 8/2019 Viola et al.
2019/0262153 A1 8/2019 Tassoni et al.
2019/0269400 A1 9/2019 Mandakolathur Vasudevan et al.
2019/0269402 A1 9/2019 Murray et al.
2019/0269428 A1 9/2019 Allen et al.
2019/0274685 A1 9/2019 Olson et al.
2019/0282233 A1 9/2019 Burbank et al.
2019/0290264 A1 9/2019 Morgan et al.
2019/0290266 A1 9/2019 Scheib et al.
2019/0290267 A1 9/2019 Baxter, III et al.
2019/0290297 A1 9/2019 Haider et al.
2019/0298350 A1 10/2019 Shelton, IV et al.
2019/0298353 A1 10/2019 Shelton, IV et al.
2019/0298360 A1 10/2019 Shelton, IV et al.
2019/0298361 A1 10/2019 Shelton, IV et al.
2019/0298362 A1 10/2019 Shelton, IV et al.
2019/0298381 A1 10/2019 Kreidler et al.
2019/0307452 A1 10/2019 Shelton, IV et al.
2019/0307453 A1 10/2019 Shelton, IV et al.
2019/0307454 A1 10/2019 Shelton, IV et al.
2019/0307456 A1 10/2019 Shelton, IV et al.
2019/0314015 A1 10/2019 Shelton, IV et al.

(56) **References Cited**

U.S. PATENT DOCUMENTS

2019/0321040 A1 10/2019 Shelton, IV
2019/0321062 A1 10/2019 Williams
2019/0328387 A1 10/2019 Overmyer et al.
2019/0343515 A1 11/2019 Morgan et al.
2019/0357909 A1 11/2019 Huitema et al.
2019/0388091 A1 12/2019 Eschbach et al.
2020/0000531 A1 1/2020 Giordano et al.
2020/0008802 A1 1/2020 Aronhalt et al.
2020/0008809 A1 1/2020 Shelton, IV et al.
2020/0008827 A1 1/2020 Dearden et al.
2020/0015817 A1 1/2020 Harris et al.
2020/0015915 A1 1/2020 Swayze et al.
2020/0030020 A1 1/2020 Wang et al.
2020/0037939 A1 2/2020 Castagna et al.
2020/0038016 A1 2/2020 Shelton, IV et al.
2020/0038018 A1 2/2020 Shelton, IV et al.
2020/0038020 A1 2/2020 Yates et al.
2020/0046355 A1 2/2020 Harris et al.
2020/0046356 A1 2/2020 Baxter, III et al.
2020/0054320 A1 2/2020 Harris et al.
2020/0054321 A1 2/2020 Harris et al.
2020/0054329 A1 2/2020 Shelton, IV et al.
2020/0054332 A1 2/2020 Shelton, IV et al.
2020/0054333 A1 2/2020 Shelton, IV et al.
2020/0054334 A1 2/2020 Shelton, IV et al.
2020/0054355 A1 2/2020 Laurent et al.
2020/0060523 A1 2/2020 Matsuda et al.
2020/0060713 A1 2/2020 Leimbach et al.
2020/0061385 A1 2/2020 Schwarz et al.
2020/0085431 A1 3/2020 Swayze et al.
2020/0085435 A1 3/2020 Shelton, IV et al.
2020/0085518 A1 3/2020 Giordano et al.
2020/0093484 A1 3/2020 Shelton, IV et al.
2020/0093506 A1 3/2020 Leimbach et al.
2020/0093550 A1 3/2020 Spivey et al.
2020/0100783 A1 4/2020 Yates et al.
2020/0107829 A1 4/2020 Shelton, IV et al.
2020/0114505 A1 4/2020 Kikuchi
2020/0138436 A1 5/2020 Yates et al.
2020/0138507 A1 5/2020 Davison et al.
2020/0138534 A1 5/2020 Garcia Kilroy et al.
2020/0146741 A1 5/2020 Long et al.
2020/0187943 A1 6/2020 Shelton, IV et al.
2020/0197027 A1 6/2020 Hershberger et al.
2020/0205810 A1 7/2020 Posey et al.
2020/0205811 A1 7/2020 Posey et al.
2020/0205823 A1 7/2020 Vendely et al.
2020/0214706 A1 7/2020 Vendely et al.
2020/0214731 A1 7/2020 Shelton, IV et al.
2020/0229814 A1 7/2020 Amariglio et al.
2020/0237371 A1 7/2020 Huitema et al.
2020/0261086 A1 8/2020 Zeiner et al.
2020/0268377 A1 8/2020 Schmid et al.
2020/0275927 A1 9/2020 Shelton, IV et al.
2020/0275930 A1 9/2020 Harris et al.
2020/0280219 A1 9/2020 Laughery et al.
2020/0289112 A1 9/2020 Whitfield et al.
2020/0297341 A1 9/2020 Yates et al.
2020/0297346 A1 9/2020 Shelton, IV et al.
2020/0305862 A1 10/2020 Yates et al.
2020/0305863 A1 10/2020 Yates et al.
2020/0305864 A1 10/2020 Yates et al.
2020/0305870 A1 10/2020 Shelton, IV
2020/0305872 A1 10/2020 Weidner et al.
2020/0305874 A1 10/2020 Huitema et al.
2020/0315623 A1 10/2020 Eisinger et al.
2020/0323526 A1 10/2020 Huang et al.
2020/0330092 A1 10/2020 Shelton, IV et al.
2020/0330093 A1 10/2020 Shelton, IV et al.
2020/0330096 A1 10/2020 Shelton, IV et al.
2020/0330181 A1 10/2020 Junger et al.
2020/0337791 A1 10/2020 Shelton, IV et al.
2020/0345346 A1 11/2020 Shelton, IV et al.
2020/0345349 A1 11/2020 Kimball et al.
2020/0345352 A1 11/2020 Shelton, IV et al.
2020/0345353 A1 11/2020 Leimbach et al.
2020/0345356 A1 11/2020 Leimbach et al.
2020/0345357 A1 11/2020 Leimbach et al.
2020/0345358 A1 11/2020 Jenkins
2020/0345359 A1 11/2020 Baxter, III et al.
2020/0345363 A1 11/2020 Shelton, IV et al.
2020/0345435 A1 11/2020 Traina
2020/0352562 A1 11/2020 Timm et al.
2020/0367886 A1 11/2020 Shelton, IV et al.
2020/0375585 A1 12/2020 Swayze et al.
2020/0375597 A1 12/2020 Shelton, IV et al.
2020/0390444 A1 12/2020 Harris et al.
2020/0397430 A1 12/2020 Patel et al.
2020/0405292 A1 12/2020 Shelton, IV et al.
2020/0405293 A1 12/2020 Shelton, IV et al.
2020/0405296 A1 12/2020 Shelton, IV et al.
2020/0405302 A1 12/2020 Shelton, IV et al.
2020/0405304 A1 12/2020 Mozdzierz et al.
2020/0405306 A1 12/2020 Shelton, IV et al.
2020/0405307 A1 12/2020 Shelton, IV et al.
2020/0405308 A1 12/2020 Shelton, IV
2020/0405316 A1 12/2020 Shelton, IV et al.
2020/0405341 A1 12/2020 Hess et al.
2020/0405403 A1 12/2020 Shelton, IV et al.
2020/0405404 A1 12/2020 Shelton, IV et al.
2020/0405410 A1 12/2020 Shelton, IV
2020/0405439 A1 12/2020 Shelton, IV et al.
2020/0410177 A1 12/2020 Shelton, IV
2021/0000466 A1 1/2021 Leimbach et al.
2021/0000467 A1 1/2021 Shelton, IV et al.
2021/0007742 A1 1/2021 Rector et al.
2021/0015480 A1 1/2021 Shelton, IV et al.
2021/0030416 A1 2/2021 Shelton, IV et al.
2021/0045742 A1 2/2021 Shelton, IV et al.
2021/0052271 A1 2/2021 Harris et al.
2021/0059661 A1 3/2021 Schmid et al.
2021/0059662 A1 3/2021 Shelton, IV
2021/0059664 A1 3/2021 Hensel et al.
2021/0059670 A1 3/2021 Overmyer et al.
2021/0059672 A1 3/2021 Giordano et al.
2021/0059673 A1 3/2021 Shelton, IV et al.
2021/0068829 A1 3/2021 Miller et al.
2021/0068835 A1 3/2021 Shelton, IV et al.
2021/0077099 A1 3/2021 Shelton, IV et al.
2021/0077100 A1 3/2021 Shelton, IV et al.
2021/0077109 A1 3/2021 Harris et al.
2021/0085313 A1 3/2021 Morgan et al.
2021/0085314 A1 3/2021 Schmid et al.
2021/0085315 A1 3/2021 Aronhalt et al.
2021/0085316 A1 3/2021 Harris et al.
2021/0085320 A1 3/2021 Leimbach et al.
2021/0085321 A1 3/2021 Shelton, IV et al.
2021/0085325 A1 3/2021 Shelton, IV et al.
2021/0093321 A1 4/2021 Auld et al.
2021/0093323 A1 4/2021 Scirica et al.
2021/0100541 A1 4/2021 Shelton, IV et al.
2021/0100982 A1 4/2021 Laby et al.
2021/0106333 A1 4/2021 Shelton, IV et al.
2021/0107031 A1 4/2021 Bales, Jr. et al.
2021/0121175 A1 4/2021 Yates et al.
2021/0128146 A1 5/2021 Shelton, IV et al.
2021/0128153 A1 5/2021 Sgroi
2021/0137522 A1 5/2021 Shelton, IV et al.
2021/0153866 A1 5/2021 Knapp et al.
2021/0177401 A1 6/2021 Abramek et al.
2021/0177411 A1 6/2021 Williams
2021/0186492 A1 6/2021 Shelton, IV et al.
2021/0186495 A1 6/2021 Shelton, IV et al.
2021/0186497 A1 6/2021 Shelton, IV et al.
2021/0186499 A1 6/2021 Shelton, IV et al.
2021/0186501 A1 6/2021 Shelton, IV et al.
2021/0186502 A1 6/2021 Shelton, IV et al.
2021/0204941 A1 7/2021 Dewaele et al.
2021/0204951 A1 7/2021 Sgroi et al.
2021/0212671 A1 7/2021 Ramadan et al.
2021/0212691 A1 7/2021 Smith et al.
2021/0212776 A1 7/2021 Schmitt et al.
2021/0228209 A1 7/2021 Shelton, IV et al.
2021/0236117 A1 8/2021 Morgan et al.

(56) **References Cited**

U.S. PATENT DOCUMENTS

2021/0236124 A1 8/2021 Shelton, IV et al.
2021/0244406 A1 8/2021 Kerr et al.
2021/0244407 A1 8/2021 Shelton, IV et al.
2021/0244410 A1 8/2021 Swayze et al.
2021/0244411 A1 8/2021 Smith et al.
2021/0244412 A1 8/2021 Vendely et al.
2021/0259681 A1 8/2021 Shelton, IV et al.
2021/0259687 A1 8/2021 Gonzalez et al.
2021/0259986 A1 8/2021 Widenhouse et al.
2021/0259987 A1 8/2021 Widenhouse et al.
2021/0267589 A1 9/2021 Swayze et al.
2021/0267594 A1 9/2021 Morgan et al.
2021/0267595 A1 9/2021 Posada et al.
2021/0267596 A1 9/2021 Fanelli et al.
2021/0275053 A1 9/2021 Shelton, IV et al.
2021/0275172 A1 9/2021 Harris et al.
2021/0275173 A1 9/2021 Shelton, IV et al.
2021/0275175 A1 9/2021 Vadali et al.
2021/0275176 A1 9/2021 Beckman et al.
2021/0282767 A1 9/2021 Shelton, IV et al.
2021/0282769 A1 9/2021 Baxter, III et al.
2021/0282774 A1 9/2021 Shelton, IV et al.
2021/0282776 A1 9/2021 Overmyer et al.
2021/0290226 A1 9/2021 Mandakolathur Vasudevan et al.
2021/0290231 A1 9/2021 Baxter, III et al.
2021/0290232 A1 9/2021 Harris et al.
2021/0290233 A1 9/2021 Shelton, IV et al.
2021/0290236 A1 9/2021 Moore et al.
2021/0290322 A1 9/2021 Traina
2021/0298745 A1 9/2021 Leimbach et al.
2021/0298746 A1 9/2021 Leimbach et al.
2021/0307744 A1 10/2021 Walcott et al.
2021/0307748 A1 10/2021 Harris et al.
2021/0315566 A1 10/2021 Yates et al.
2021/0315570 A1 10/2021 Shelton, IV
2021/0315571 A1 10/2021 Swayze et al.
2021/0315573 A1 10/2021 Shelton, IV et al.
2021/0315574 A1 10/2021 Shelton, IV et al.
2021/0315576 A1 10/2021 Shelton, IV et al.
2021/0315577 A1 10/2021 Shelton, IV et al.
2021/0322009 A1 10/2021 Huang et al.
2021/0330321 A1 10/2021 Leimbach et al.
2021/0338233 A1 11/2021 Shelton, IV et al.
2021/0338234 A1 11/2021 Shelton, IV et al.
2021/0338260 A1 11/2021 Le Rolland et al.
2021/0353284 A1 11/2021 Yang et al.
2021/0369271 A1 12/2021 Schings et al.
2021/0369273 A1 12/2021 Yates et al.
2021/0378669 A1 12/2021 Shelton, IV et al.
2021/0393260 A1 12/2021 Shelton, IV et al.
2021/0393261 A1 12/2021 Harris et al.
2021/0393262 A1 12/2021 Shelton, IV et al.
2021/0393268 A1 12/2021 Shelton, IV et al.
2021/0393366 A1 12/2021 Shelton, IV et al.
2022/0000478 A1 1/2022 Shelton, IV et al.
2022/0000479 A1 1/2022 Shelton, IV et al.
2022/0015760 A1 1/2022 Beardsley et al.
2022/0031313 A1 2/2022 Bakos et al.
2022/0031314 A1 2/2022 Bakos et al.
2022/0031315 A1 2/2022 Bakos et al.
2022/0031319 A1 2/2022 Witte et al.
2022/0031320 A1 2/2022 Hall et al.
2022/0031322 A1 2/2022 Parks
2022/0031323 A1 2/2022 Witte
2022/0031324 A1 2/2022 Hall et al.
2022/0031345 A1 2/2022 Witte
2022/0031346 A1 2/2022 Parks
2022/0031350 A1 2/2022 Witte
2022/0031351 A1 2/2022 Moubarak et al.
2022/0049593 A1 2/2022 Groover et al.
2022/0054125 A1 2/2022 Ji et al.
2022/0054130 A1 2/2022 Overmyer et al.
2022/0061836 A1 3/2022 Parihar et al.
2022/0061843 A1 3/2022 Vendely et al.
2022/0061845 A1 3/2022 Shelton, IV et al.
2022/0061862 A1 3/2022 Shelton, IV et al.
2022/0071630 A1 3/2022 Swayze et al.
2022/0071631 A1 3/2022 Harris et al.
2022/0071632 A1 3/2022 Patel et al.
2022/0071635 A1 3/2022 Shelton, IV et al.
2022/0079580 A1 3/2022 Vendely et al.
2022/0079586 A1 3/2022 Shelton, IV et al.
2022/0079588 A1 3/2022 Harris et al.
2022/0079589 A1 3/2022 Harris et al.
2022/0079590 A1 3/2022 Harris et al.
2022/0079595 A1 3/2022 Huitema et al.
2022/0079596 A1 3/2022 Huitema et al.
2022/0087676 A1 3/2022 Shelton, IV et al.
2022/0104816 A1 4/2022 Fernandes et al.
2022/0104820 A1 4/2022 Shelton, IV et al.
2022/0117602 A1 4/2022 Wise et al.
2022/0133299 A1 5/2022 Baxter, III
2022/0133300 A1 5/2022 Leimbach et al.
2022/0133301 A1 5/2022 Leimbach
2022/0133302 A1 5/2022 Zerkle et al.
2022/0133303 A1 5/2022 Huang
2022/0133304 A1 5/2022 Leimbach et al.
2022/0133310 A1 5/2022 Ross
2022/0133311 A1 5/2022 Huang
2022/0133312 A1 5/2022 Huang
2022/0142643 A1 5/2022 Shelton, IV et al.
2022/0151611 A1 5/2022 Shelton, IV et al.
2022/0151613 A1 5/2022 Vendely et al.
2022/0151614 A1 5/2022 Vendely et al.
2022/0151615 A1 5/2022 Shelton, IV et al.
2022/0151616 A1 5/2022 Shelton, IV et al.
2022/0160358 A1 5/2022 Wixey
2022/0167968 A1 6/2022 Worthington et al.
2022/0167970 A1 6/2022 Aronhalt et al.
2022/0167971 A1 6/2022 Shelton, IV et al.
2022/0167972 A1 6/2022 Shelton, IV et al.
2022/0167973 A1 6/2022 Shelton, IV et al.
2022/0167974 A1 6/2022 Shelton, IV et al.
2022/0167975 A1 6/2022 Shelton, IV et al.
2022/0167977 A1 6/2022 Shelton, IV et al.
2022/0167979 A1 6/2022 Yates et al.
2022/0167980 A1 6/2022 Shelton, IV et al.
2022/0167981 A1 6/2022 Shelton, IV et al.
2022/0167982 A1 6/2022 Shelton, IV et al.
2022/0167983 A1 6/2022 Shelton, IV et al.
2022/0167984 A1 6/2022 Shelton, IV et al.
2022/0167995 A1 6/2022 Parfett et al.
2022/0168038 A1 6/2022 Shelton, IV et al.
2022/0175370 A1 6/2022 Shelton, IV et al.
2022/0175371 A1 6/2022 Hess et al.
2022/0175372 A1 6/2022 Shelton, IV et al.
2022/0175375 A1 6/2022 Harris et al.
2022/0175378 A1 6/2022 Leimbach et al.
2022/0175381 A1 6/2022 Scheib et al.
2022/0183685 A1 6/2022 Shelton, IV et al.
2022/0211367 A1 7/2022 Schmid et al.
2022/0218332 A1 7/2022 Shelton, IV et al.
2022/0218333 A1 7/2022 Parihar et al.
2022/0218334 A1 7/2022 Parihar et al.
2022/0218336 A1 7/2022 Timm et al.
2022/0218337 A1 7/2022 Timm et al.
2022/0218338 A1 7/2022 Shelton, IV et al.
2022/0218340 A1 7/2022 Harris et al.
2022/0218344 A1 7/2022 Leimbach et al.
2022/0218345 A1 7/2022 Shelton, IV et al.
2022/0218346 A1 7/2022 Shelton, IV et al.
2022/0218347 A1 7/2022 Shelton, IV et al.
2022/0218348 A1 7/2022 Swensgard et al.
2022/0218349 A1 7/2022 Shelton, IV et al.
2022/0218350 A1 7/2022 Shelton, IV et al.
2022/0218351 A1 7/2022 Shelton, IV et al.
2022/0218376 A1 7/2022 Shelton, IV et al.
2022/0218378 A1 7/2022 Shelton, IV et al.
2022/0218381 A1 7/2022 Leimbach et al.
2022/0218382 A1 7/2022 Leimbach et al.
2022/0225980 A1 7/2022 Shelton, IV et al.
2022/0225982 A1 7/2022 Yates et al.
2022/0225986 A1 7/2022 Shelton, IV et al.
2022/0225992 A1 7/2022 Smith et al.

(56) **References Cited**

U.S. PATENT DOCUMENTS

2022/0225993	A1	7/2022	Huitema et al.
2022/0225994	A1	7/2022	Setser et al.
2022/0226012	A1	7/2022	Shelton, IV et al.
2022/0226013	A1	7/2022	Hall et al.
2022/0233184	A1	7/2022	Parihar et al.
2022/0233185	A1	7/2022	Parihar et al.
2022/0233186	A1	7/2022	Timm et al.
2022/0233187	A1	7/2022	Timm et al.
2022/0233188	A1	7/2022	Timm et al.
2022/0233194	A1	7/2022	Baxter, III et al.
2022/0233195	A1	7/2022	Shelton, IV et al.
2022/0233257	A1	7/2022	Shelton, IV et al.
2022/0240928	A1	8/2022	Timm et al.
2022/0240929	A1	8/2022	Timm et al.
2022/0240930	A1	8/2022	Yates et al.
2022/0240936	A1	8/2022	Huitema et al.
2022/0240937	A1	8/2022	Shelton, IV et al.
2022/0249095	A1	8/2022	Shelton, IV et al.
2022/0265272	A1	8/2022	Li et al.
2022/0273291	A1	9/2022	Shelton, IV et al.
2022/0273292	A1	9/2022	Shelton, IV et al.
2022/0273293	A1	9/2022	Shelton, IV et al.
2022/0273294	A1	9/2022	Creamer et al.
2022/0273299	A1	9/2022	Shelton, IV et al.
2022/0273300	A1	9/2022	Shelton, IV et al.
2022/0273301	A1	9/2022	Creamer et al.
2022/0273302	A1	9/2022	Shelton, IV et al.
2022/0273303	A1	9/2022	Creamer et al.
2022/0273304	A1	9/2022	Shelton, IV et al.
2022/0273305	A1	9/2022	Shelton, IV et al.
2022/0273306	A1	9/2022	Shelton, IV et al.
2022/0273307	A1	9/2022	Shelton, IV et al.
2022/0273308	A1	9/2022	Shelton, IV et al.
2022/0278438	A1	9/2022	Shelton, IV et al.
2022/0287711	A1	9/2022	Ming et al.
2022/0296230	A1	9/2022	Adams et al.
2022/0296231	A1	9/2022	Adams et al.
2022/0296232	A1	9/2022	Adams et al.
2022/0296233	A1	9/2022	Morgan et al.
2022/0296234	A1	9/2022	Shelton, IV et al.
2022/0296235	A1	9/2022	Morgan et al.
2022/0296236	A1	9/2022	Bakos et al.
2022/0296237	A1	9/2022	Bakos et al.
2022/0304679	A1	9/2022	Bakos et al.
2022/0304680	A1	9/2022	Shelton, IV et al.
2022/0304681	A1	9/2022	Shelton, IV et al.
2022/0304682	A1	9/2022	Shelton, IV et al.
2022/0304683	A1	9/2022	Shelton, IV et al.
2022/0304684	A1	9/2022	Bakos et al.
2022/0304685	A1	9/2022	Bakos et al.
2022/0304686	A1	9/2022	Shelton, IV et al.
2022/0304687	A1	9/2022	Shelton, IV et al.
2022/0304688	A1	9/2022	Shelton, IV et al.
2022/0304689	A1	9/2022	Shelton, IV
2022/0304690	A1	9/2022	Baxter, III et al.
2022/0304714	A1	9/2022	Shelton, IV et al.
2022/0304715	A1	9/2022	Shelton, IV
2022/0313253	A1	10/2022	Shelton, IV et al.
2022/0313263	A1	10/2022	Huitema et al.
2022/0313619	A1	10/2022	Schmid et al.
2022/0323067	A1	10/2022	Overmyer et al.
2022/0323070	A1	10/2022	Ross et al.
2022/0330940	A1	10/2022	Shelton, IV et al.
2022/0338870	A1	10/2022	Swayze et al.
2022/0346774	A1	11/2022	Hess et al.
2022/0346775	A1	11/2022	Hess et al.
2022/0354493	A1	11/2022	Shelton, IV et al.
2022/0354495	A1	11/2022	Baxter, III et al.
2022/0361879	A1	11/2022	Baxter, III et al.
2022/0370069	A1	11/2022	Simms et al.
2022/0378418	A1	12/2022	Huang et al.
2022/0378420	A1	12/2022	Leimbach et al.
2022/0378424	A1	12/2022	Huang et al.
2022/0378425	A1	12/2022	Huang et al.
2022/0378426	A1	12/2022	Huang et al.
2022/0378427	A1	12/2022	Huang et al.
2022/0378428	A1	12/2022	Shelton, IV et al.
2022/0378435	A1	12/2022	Dholakia et al.
2022/0387030	A1	12/2022	Shelton, IV et al.
2022/0387031	A1	12/2022	Yates et al.
2022/0387032	A1	12/2022	Huitema et al.
2022/0387033	A1	12/2022	Huitema et al.
2022/0387034	A1	12/2022	Huitema et al.
2022/0387035	A1	12/2022	Huitema et al.
2022/0387036	A1	12/2022	Huitema et al.
2022/0387037	A1	12/2022	Huitema et al.
2022/0387038	A1	12/2022	Huitema et al.
2022/0387125	A1	12/2022	Leimbach et al.

FOREIGN PATENT DOCUMENTS

AU	2012268848	A1	1/2013
AU	2011218702	B2	6/2013
AU	2012200178	B2	7/2013
BR	112013007744	A2	6/2016
BR	112013027777	A2	1/2017
CA	1015829	A	8/1977
CA	1125615	A	6/1982
CA	2520413	A1	3/2007
CA	2725181	A1	11/2007
CA	2851239	A1	11/2007
CA	2664874	A1	11/2009
CA	2813230	A1	4/2012
CA	2940510	A1	8/2015
CA	2698728	C	8/2016
CN	1163558	A	10/1997
CN	2488482	Y	5/2002
CN	1634601	A	7/2005
CN	2716900	Y	8/2005
CN	2738962	Y	11/2005
CN	1777406	A	5/2006
CN	2785249	Y	5/2006
CN	2796654	Y	7/2006
CN	2868212	Y	2/2007
CN	200942099	Y	9/2007
CN	200984209	Y	12/2007
CN	200991269	Y	12/2007
CN	201001747	Y	1/2008
CN	101143105	A	3/2008
CN	201029899	Y	3/2008
CN	101188900	A	5/2008
CN	101203085	A	6/2008
CN	101273908	A	10/2008
CN	101378791	A	3/2009
CN	101507635	A	8/2009
CN	101522120	A	9/2009
CN	101669833	A	3/2010
CN	101716090	A	6/2010
CN	101721236	A	6/2010
CN	101756727	A	6/2010
CN	101828940	A	9/2010
CN	101856250	A	10/2010
CN	101873834	A	10/2010
CN	201719298	U	1/2011
CN	102038532	A	5/2011
CN	201879759	U	6/2011
CN	201949071	U	8/2011
CN	102217961	A	10/2011
CN	102217963	A	10/2011
CN	102243850	A	11/2011
CN	102247182	A	11/2011
CN	102247183	A	11/2011
CN	101779977	B	12/2011
CN	102309352	A	1/2012
CN	101912284	B	7/2012
CN	102125450	B	7/2012
CN	202313537	U	7/2012
CN	202397539	U	8/2012
CN	202426586	U	9/2012
CN	102743201	A	10/2012
CN	202489990	U	10/2012
CN	102228387	B	11/2012
CN	102835977	A	12/2012
CN	202568350	U	12/2012

(56) **References Cited**

FOREIGN PATENT DOCUMENTS

CN	103037781	A	4/2013
CN	103083053	A	5/2013
CN	103391037	A	11/2013
CN	203328751	U	12/2013
CN	103505264	A	1/2014
CN	103584893	A	2/2014
CN	103635150	A	3/2014
CN	103690212	A	4/2014
CN	103764046	A	4/2014
CN	203564285	U	4/2014
CN	203564287	U	4/2014
CN	203597997	U	5/2014
CN	103829981	A	6/2014
CN	103829983	A	6/2014
CN	103860221	A	6/2014
CN	103908313	A	7/2014
CN	203693685	U	7/2014
CN	203736251	U	7/2014
CN	103981635	A	8/2014
CN	104027145	A	9/2014
CN	203815517	U	9/2014
CN	102783741	B	10/2014
CN	102973300	B	10/2014
CN	204092074	U	1/2015
CN	104337556	A	2/2015
CN	204158440	U	2/2015
CN	204158441	U	2/2015
CN	102469995	B	3/2015
CN	104422849	A	3/2015
CN	104586463	A	5/2015
CN	204520822	U	8/2015
CN	204636451	U	9/2015
CN	103860225	B	3/2016
CN	103750872	B	5/2016
CN	105919642	A	9/2016
CN	103648410	B	10/2016
CN	105997173	A	10/2016
CN	106344091	A	1/2017
CN	104921730	B	9/2017
CN	104349800	B	11/2017
CN	107635483	A	1/2018
CN	208625784	U	3/2019
DE	273689	C	5/1914
DE	1775926	A	1/1972
DE	3036217	A1	4/1982
DE	3210466	A1	9/1983
DE	3709067	A1	9/1988
DE	19534043	A1	3/1997
DE	19851291	A1	1/2000
DE	19924311	A1	11/2000
DE	20016423	U1	2/2001
DE	20112837	U1	10/2001
DE	20121753	U1	4/2003
DE	202004012389	U1	9/2004
DE	10314072	A1	10/2004
DE	102004014011	A1	10/2005
DE	102004041871	A1	3/2006
DE	102004063606	A1	7/2006
DE	202007003114	U1	6/2007
DE	102010013150	A1	9/2011
DE	102012213322	A1	1/2014
DE	102013101158	A1	8/2014
EM	002220467-0008		4/2013
EP	0000756	A1	2/1979
EP	0122046	A1	10/1984
EP	0129442	B1	11/1987
EP	0251444	A1	1/1988
EP	0255631	A1	2/1988
EP	0169044	B1	6/1991
EP	0541950	A1	5/1993
EP	0548998	A1	6/1993
EP	0594148	A1	4/1994
EP	0646357	A1	4/1995
EP	0505036	B1	5/1995
EP	0669104	A1	8/1995
EP	0516544	B1	3/1996
EP	0705571	A1	4/1996
EP	0528478	B1	5/1996
EP	0770355	A1	5/1997
EP	0625335	B1	11/1997
EP	0879742	A1	11/1998
EP	0650701	B1	3/1999
EP	0923907	A1	6/1999
EP	0484677	B2	7/2000
EP	1034747	A1	9/2000
EP	1034748	A1	9/2000
EP	0726632	B1	10/2000
EP	1053719	A1	11/2000
EP	1055399	A1	11/2000
EP	1055400	A1	11/2000
EP	1064882	A1	1/2001
EP	1080694	A1	3/2001
EP	1090592	A1	4/2001
EP	1095627	A1	5/2001
EP	0806914	B1	9/2001
EP	1234587	A1	8/2002
EP	1284120	A1	2/2003
EP	0717967	B1	5/2003
EP	0869742	B1	5/2003
EP	1374788	A1	1/2004
EP	1407719	A2	4/2004
EP	0996378	B1	6/2004
EP	1558161	A1	8/2005
EP	1157666	B1	9/2005
EP	0880338	B1	10/2005
EP	1158917	B1	11/2005
EP	1344498	B1	11/2005
EP	1330989	B1	12/2005
EP	1632191	A2	3/2006
EP	1082944	B1	5/2006
EP	1253866	B1	7/2006
EP	1723914	A1	11/2006
EP	1285633	B1	12/2006
EP	1011494	B1	1/2007
EP	1767163	A1	3/2007
EP	1837041	A1	9/2007
EP	0922435	B1	10/2007
EP	1599146	B1	10/2007
EP	1330201	B1	6/2008
EP	2039302	A2	3/2009
EP	1719461	B1	6/2009
EP	2116196	A2	11/2009
EP	2153793	A2	2/2010
EP	1769754	B1	6/2010
EP	1627605	B1	12/2010
EP	2316345	A1	5/2011
EP	1962711	B1	2/2012
EP	2486862	A2	8/2012
EP	2486868	A2	8/2012
EP	2517638	A1	10/2012
EP	2529671	A2	12/2012
EP	2606812	A1	6/2013
EP	2649948	A1	10/2013
EP	2649949	A1	10/2013
EP	2668910	A2	12/2013
EP	2687164	A2	1/2014
EP	2713902	A1	4/2014
EP	2743042	A2	6/2014
EP	2764827	A2	8/2014
EP	2777524	A2	9/2014
EP	2789299	A1	10/2014
EP	2842500	A1	3/2015
EP	2853220	A1	4/2015
EP	2878274	A1	6/2015
EP	2298220	B1	6/2016
EP	2510891	B1	6/2016
EP	3031404	A1	6/2016
EP	3047806	A1	7/2016
EP	3078334	A1	10/2016
EP	2364651	B1	11/2016
EP	2747235	B1	11/2016
EP	3095399	A2	11/2016
EP	3120781	A2	1/2017
EP	3135225	A2	3/2017

(56) **References Cited**

FOREIGN PATENT DOCUMENTS

EP	2789299	B1	5/2017
EP	3225190	A2	10/2017
EP	3235445	A1	10/2017
EP	3326548	A1	5/2018
EP	3363378	A1	8/2018
EP	3409216	A1	12/2018
EP	3476301	A1	5/2019
EP	3476334	A1	5/2019
EP	3275378	B1	7/2019
EP	3505095	A1	7/2019
EP	3791810	A1	3/2021
ES	1070456	U	9/2009
FR	459743	A	11/1913
FR	999646	A	2/1952
FR	1112936	A	3/1956
FR	2598905	A1	11/1987
FR	2689749	B1	7/1994
FR	2765794	A1	1/1999
FR	2815842	A1	5/2002
GB	939929	A	10/1963
GB	1210522	A	10/1970
GB	1217159	A	12/1970
GB	1339394	A	12/1973
GB	2024012	A	1/1980
GB	2109241	A	6/1983
GB	2090534	B	6/1984
GB	2272159	A	5/1994
GB	2336214	A	10/1999
GB	2509523	A	7/2014
GR	930100110	A	11/1993
JP	S4711908	Y1	5/1972
JP	S5033988	U	4/1975
JP	S5367286	A	6/1978
JP	S56112235	A	9/1981
JP	S60113007	A	6/1985
JP	S62170011	U	10/1987
JP	S6333137	A	2/1988
JP	S63270040	A	11/1988
JP	S63318824	A	12/1988
JP	H0129503	B2	6/1989
JP	H02106189	A	4/1990
JP	H0378514	U	8/1991
JP	H0385009	U	8/1991
JP	H0489041	A	3/1992
JP	H04215747	A	8/1992
JP	H04131860	U	12/1992
JP	H0584252	A	4/1993
JP	H05123325	A	5/1993
JP	H05226945	A	9/1993
JP	H0630945	A	2/1994
JP	H0636757	A	2/1994
JP	H06237937	A	8/1994
JP	H06304176	A	11/1994
JP	H06327684	A	11/1994
JP	H079622	U	2/1995
JP	H07124166	A	5/1995
JP	H07163573	A	6/1995
JP	H07255735	A	10/1995
JP	H07285089	A	10/1995
JP	H0833642	A	2/1996
JP	H08164141	A	6/1996
JP	H08182684	A	7/1996
JP	H08507708	A	8/1996
JP	H08229050	A	9/1996
JP	H08289895	A	11/1996
JP	H0950795	A	2/1997
JP	H09-323068	A	12/1997
JP	H10118090	A	5/1998
JP	H10-200699	A	7/1998
JP	H10296660	A	11/1998
JP	2000014632	A	1/2000
JP	2000033071	A	2/2000
JP	2000112002	A	4/2000
JP	2000166932	A	6/2000
JP	2000171730	A	6/2000
JP	2000210299	A	8/2000
JP	2000271141	A	10/2000
JP	2000287987	A	10/2000
JP	2000325303	A	11/2000
JP	2001-69758	A	3/2001
JP	2001087272	A	4/2001
JP	2001208655	A	8/2001
JP	2001514541	A	9/2001
JP	2001276091	A	10/2001
JP	2002051974	A	2/2002
JP	2002054903	A	2/2002
JP	2002085415	A	3/2002
JP	2002143078	A	5/2002
JP	2002153481	A	5/2002
JP	2002528161	A	9/2002
JP	2002314298	A	10/2002
JP	2003135473	A	5/2003
JP	2003521301	A	7/2003
JP	3442423	B2	9/2003
JP	2003300416	A	10/2003
JP	2004147701	A	5/2004
JP	2004162035	A	6/2004
JP	2004229976	A	8/2004
JP	2005013573	A	1/2005
JP	2005080702	A	3/2005
JP	2005131163	A	5/2005
JP	2005131164	A	5/2005
JP	2005131173	A	5/2005
JP	2005131211	A	5/2005
JP	2005131212	A	5/2005
JP	2005137423	A	6/2005
JP	2005187954	A	7/2005
JP	2005211455	A	8/2005
JP	2005328882	A	12/2005
JP	2005335432	A	12/2005
JP	2005342267	A	12/2005
JP	3791856	B2	6/2006
JP	2006187649	A	7/2006
JP	2006218228	A	8/2006
JP	2006281405	A	10/2006
JP	2006291180	A	10/2006
JP	2006346445	A	12/2006
JP	2007-97252	A	4/2007
JP	2007289715	A	11/2007
JP	2007304057	A	11/2007
JP	2007306710	A	11/2007
JP	D1322057		2/2008
JP	2008154804	A	7/2008
JP	2008220032	A	9/2008
JP	2009507526	A	2/2009
JP	2009189838	A	8/2009
JP	2009189846	A	8/2009
JP	2009207260	A	9/2009
JP	2009226028	A	10/2009
JP	2009538684	A	11/2009
JP	2009539420	A	11/2009
JP	D1383743		2/2010
JP	2010065594	A	3/2010
JP	2010069307	A	4/2010
JP	2010069310	A	4/2010
JP	2010098844	A	4/2010
JP	2010214128	A	9/2010
JP	2011072574	A	4/2011
JP	4722849	B2	7/2011
JP	4728996	B2	7/2011
JP	2011524199	A	9/2011
JP	2011200665	A	10/2011
JP	D1432094		12/2011
JP	1433631	S	2/2012
JP	2012115542	A	6/2012
JP	2012143283	A	8/2012
JP	5154710	B1	2/2013
JP	2013099551	A	5/2013
JP	2013126430	A	6/2013
JP	D1481426		9/2013
JP	2013541982	A	11/2013
JP	2013541983	A	11/2013
JP	2013541997	A	11/2013
JP	2014018667	A	2/2014

(56) **References Cited**

FOREIGN PATENT DOCUMENTS

JP	D1492363		2/2014
JP	2014121599	A	7/2014
JP	2014171879	A	9/2014
JP	1517663	S	2/2015
JP	2015512725	A	4/2015
JP	2015513956	A	5/2015
JP	2015513958	A	5/2015
JP	2015514471	A	5/2015
JP	2015516838	A	6/2015
JP	2015521524	A	7/2015
JP	2015521525	A	7/2015
JP	2016007800	A	1/2016
JP	2016508792	A	3/2016
JP	2016512057	A	4/2016
JP	2016530949	A	10/2016
JP	2017513563	A	6/2017
JP	1601498	S	4/2018
JP	2019513530	A	5/2019
JP	2020501797	A	1/2020
JP	D1677030	S	1/2021
JP	D1696539	S	10/2021
KR	20100110134	A	10/2010
KR	20110003229	A	1/2011
KR	300631507		3/2012
KR	300747646		6/2014
KR	20180053811	A	5/2018
RU	1814161	C	5/1993
RU	2008830	C1	3/1994
RU	2052979	C1	1/1996
RU	2066128	C1	9/1996
RU	2069981	C1	12/1996
RU	2098025	C1	12/1997
RU	2104671	C1	2/1998
RU	2110965	C1	5/1998
RU	2141279	C1	11/1999
RU	2144791	C1	1/2000
RU	2161450	C1	1/2001
RU	2181566	C2	4/2002
RU	2187249	C2	8/2002
RU	32984	U1	10/2003
RU	2225170	C2	3/2004
RU	42750	U1	12/2004
RU	61114	U1	2/2007
RU	61122	U1	2/2007
RU	2430692	C2	10/2011
SU	189517	A	1/1967
SU	297156	A	5/1971
SU	328636	A	9/1972
SU	511939	A1	4/1976
SU	674747	A1	7/1979
SU	728848	A1	4/1980
SU	1009439	A	4/1983
SU	1042742	A1	9/1983
SU	1271497	A1	11/1986
SU	1333319	A2	8/1987
SU	1377052	A1	2/1988
SU	1377053	A1	2/1988
SU	1443874	A1	12/1988
SU	1509051	A1	9/1989
SU	1561964	A1	5/1990
SU	1708312	A1	1/1992
SU	1722476	A1	3/1992
SU	1752361	A1	8/1992
SU	1814161	A1	5/1993
WO	WO-9308754	A1	5/1993
WO	WO-9315648	A1	8/1993
WO	WO-9420030	A1	9/1994
WO	WO-9517855	A1	7/1995
WO	WO-9520360	A1	8/1995
WO	WO-9623448	A1	8/1996
WO	WO-9635464	A1	11/1996
WO	WO-9639086	A1	12/1996
WO	WO-9639088	A1	12/1996
WO	WO-9724073	A1	7/1997
WO	WO-9734533	A1	9/1997
WO	WO-9827870	A1	7/1998
WO	WO-9903407	A1	1/1999
WO	WO-9903409	A1	1/1999
WO	WO-9948430	A1	9/1999
WO	WO-0024322	A1	5/2000
WO	WO-0024330	A1	5/2000
WO	WO-0036690	A2	6/2000
WO	WO-0053112	A2	9/2000
WO	WO-0024448	A2	10/2000
WO	WO-0057796	A1	10/2000
WO	WO-0105702	A1	1/2001
WO	WO-0154594	A1	8/2001
WO	WO-0158371	A1	8/2001
WO	WO-0162164	A2	8/2001
WO	WO-0162169	A2	8/2001
WO	WO-0191646	A1	12/2001
WO	WO-0219932	A1	3/2002
WO	WO-0226143	A1	4/2002
WO	WO-0236028	A1	5/2002
WO	WO-02065933	A2	8/2002
WO	WO-03055402	A1	7/2003
WO	WO-03094747	A1	11/2003
WO	WO-03079909	A3	3/2004
WO	WO-2004019803	A1	3/2004
WO	WO-2004032783	A1	4/2004
WO	WO-2004047626	A1	6/2004
WO	WO-2004047653	A2	6/2004
WO	WO-2004056277	A1	7/2004
WO	WO-2004078050	A2	9/2004
WO	WO-2004078051	A2	9/2004
WO	WO-2004096015	A2	11/2004
WO	WO-2006044581	A2	4/2006
WO	WO-2006051252	A1	5/2006
WO	WO-2006059067	A1	6/2006
WO	WO-2006073581	A2	7/2006
WO	WO-2006085389	A1	8/2006
WO	WO-2007015971	A2	2/2007
WO	WO-2007074430	A1	7/2007
WO	WO-2007129121	A1	11/2007
WO	WO-2007137304	A2	11/2007
WO	WO-2007142625	A2	12/2007
WO	WO-2008021969	A2	2/2008
WO	WO-2008061566	A1	5/2008
WO	WO-2008089404	A2	7/2008
WO	WO-2009005969	A2	1/2009
WO	WO-2009067649	A2	5/2009
WO	WO-2009091497	A2	7/2009
WO	WO-2010126129	A1	11/2010
WO	WO-2010134913	A1	11/2010
WO	WO-2011008672	A2	1/2011
WO	WO-2011044343	A2	4/2011
WO	WO-2012006306	A2	1/2012
WO	WO-2012013577	A1	2/2012
WO	WO-2012044606	A2	4/2012
WO	WO-2012061725	A1	5/2012
WO	WO-2012072133	A1	6/2012
WO	WO-2012166503	A1	12/2012
WO	WO-2013087092	A1	6/2013
WO	WO-2013151888	A1	10/2013
WO	WO-2014004209	A2	1/2014
WO	WO-2014113438	A1	7/2014
WO	WO-2014175894	A1	10/2014
WO	WO-2015032797	A1	3/2015
WO	WO-2015076780	A1	5/2015
WO	WO-2015137040	A1	9/2015
WO	WO-2015138760	A1	9/2015
WO	WO-2015187107	A1	12/2015
WO	WO-2016100682	A1	6/2016
WO	WO-2016107448	A1	7/2016
WO	WO-2017138905	A1	8/2017
WO	WO-2018011664	A1	1/2018
WO	WO-2019036490	A1	2/2019
WO	WO-2019130087	A1	7/2019
WO	WO-2019130089	A1	7/2019

(56) **References Cited**

FOREIGN PATENT DOCUMENTS

WO WO-2019208902 A1 10/2019
WO WO-2021189234 A1 9/2021

OTHER PUBLICATIONS

ASTM procedure D2240-05, "Standard Test Method for Rubber Property-Durometer Hardness," (Published Apr. 2010).
Van Meer et al., "A Disposable Plastic Compact Wrist for Smart Minimally Invasive Surgical Tools," LAAS/CNRS (Aug. 2005).
Breedveld et al., "A New, Easily Miniaturized Sterrable Endoscope," IEEE Engineering in Medicine and Biology Magazine (Nov./Dec. 2005).
Disclosed Anonymously, "Motor-Driven Surgical Stapler Improvements," Research Disclosure Database No. 526041, Published: Feb. 2008.
B.R. Coolman, DVM, MS et al., "Comparison of Skin Staples With Sutures for Anastomosis of the Small Intestine in Dogs," Abstract; http://www.blackwell-synergy.com/doi/abs/10.1053/jvet.2000.7539?cookieSet=1&journalCode=vsu which redirects to http://www3.interscience.wiley.com/journal/119040681/abstract?CRETRY=1&SRETRY=0; [online] accessed: Sep. 22, 2008 (2 pages).
D. Tuite, Ed., "Get The Lowdown On Ultracapacitors," Nov. 15, 2007; [online] URL: http://electronicdesign.com/Articles/Print.cfm?ArticleID=17465, accessed Jan. 15, 2008 (5 pages).
Datasheet for Panasonic TK Relays Ultra Low Profile 2 A Polarized Relay, Copyright Matsushita Electric Works, Ltd. (Known of at least as early as Aug. 17, 2010), 5 pages.
Schellhammer et al., "Poly-Lactic-Acid for Coating of Endovascular Stents: Preliminary Results in Canine Experimental Av-Fistulae," Mat.-wiss. u. Werkstofftech., 32, pp. 193-199 (2001).
Miyata et al., "Biomolecule-Sensitive Hydrogels," Advanced Drug Delivery Reviews, 54 (2002) pp. 79-98.
Jeong et al., "Thermosensitive Sol-Gel Reversible Hydrogels," Advanced Drug Delivery Reviews, 54 (2002) pp. 37-51.
Covidien Brochure, "Endo GIA™ Ultra Universal Stapler," (2010), 2 pages.
Qiu et al., "Environment-Sensitive Hydrogels for Drug Delivery," Advanced Drug Delivery Reviews, 53 (2001) pp. 321-339.
Hoffman, "Hydrogels for Biomedical Applications," Advanced Drug Delivery Reviews, 43 (2002) pp. 3-12.
Hoffman, "Hydrogels for Biomedical Applications," Advanced Drug Delivery Reviews, 54 (2002) pp. 3-12.
Peppas, "Physiologically Responsive Hydrogels," Journal of Bioactive and Compatible Polymers, vol. 6 (Jul. 1991) pp. 241-246.
Peppas, Editor "Hydrogels in Medicine and Pharmacy," vol. I, Fundamentals, CRC Press, 1986.
Young, "Microcellular foams via phase separation," Journal of Vacuum Science & Technology A 4(3), (May/Jun. 1986).
Ebara, "Carbohydrate-Derived Hydrogels and Microgels," Engineered Carbohydrate-Based Materials for Biomedical Applications: Polymers, Surfaes, Dendrimers, Nanoparticles, and Hydrogels, Edited by Ravin Narain, 2011, pp. 337-345.
http://ninpgan.net/publications/51-100/89.pdf; 2004, Ning Pan, On Uniqueness of Fibrous Materials, Design & Nature II. Eds: Colins, M. and Brebbia, C. WIT Press, Boston, 493-504.
Solorio et al., "Gelatin Microspheres Crosslinked with Genipin for Local Delivery of Growth Factors," J. Tissue Eng. Regen. Med. (2010), 4(7): pp. 514-523.
Covidien iDrive™ Ultra in Service Reference Card, "iDrive™ Ultra Powered Stapling Device," (4 pages).
Covidien iDrive™ Ultra Powered Stapling System ibrochure, "The Power of iDrive™ Ultra Powered Stapling System and Tri-Staple™ Technology," (23 pages).
Covidien "iDrive™ Ultra Powered Stapling System, A Guide for Surgeons," (6 pages).
Covidien "iDrive™ Ultra Powered Stapling System, Cleaning and Sterilization Guide," (2 pages).
Covidien Brochure "iDrive™ Ultra Powered Stapling System," (6 pages).
Covidien Brochure, "Endo GIA™ Reloads with Tri-Staple™ Technology," (2010), 1 page.
Covidien Brochure, "Endo GIA™ Reloads with Tri-Staple™ Technology and Endo GIA™ Ultra Universal Staplers," (2010), 2 pages.
Covidien Brochure, "Endo GIA™ Curved Tip Reload with Tri-Staple™ Technology," (2012), 2 pages.
Covidien Brochure, "Endo GIA™ Reloads with Tri-Staple™ Technology," (2010), 2 pages.
Pitt et al., "Attachment of Hyaluronan to Metallic Surfaces," J. Biomed. Mater. Res. 68A: pp. 95-106, 2004.
Indian Standard: Automotive Vehicles—Brakes and Braking Systems (IS 11852-1:2001), Mar. 1, 2001.
Patrick J. Sweeney: "RFID for Dummies", Mar. 11, 2010, pp. 365-365, XP055150775, ISBN: 978-1-11-805447-5, Retrieved from the Internet: URL: books.google.de/books?isbn=1118054474 [retrieved on Nov. 4, 2014]—book not attached.
Allegro MicroSystems, LLC, Automotive Full Bridge MOSFET Driver, A3941-DS, Rev. 5, 21 pages, http://www.allegromicro.com/~/media/Files/Datasheets/A3941-Datasheet.ashx?la=en.
Data Sheet of LM4F230H5QR, 2007.
Seils et al., Covidien Summary: Clinical Study "UCONN Biodynamics: Final Report on Results," (2 pages).
Byrne et al., "Molecular Imprinting Within Hydrogels," Advanced Drug Delivery Reviews, 54 (2002) pp. 149-161.
Fast, Versatile Blackfin Processors Handle Advanced RFID Reader Applications; Analog Dialogue: vol. 40—Sep. 2006; http://www.analog.com/library/analogDialogue/archives/40-09/rfid.pdf; Wayback Machine to Feb. 15, 2012.
Chen et al., "Elastomeric Biomaterials for Tissue Engineering," Progress in Polymer Science 38 (2013), pp. 584-671.
Matsuda, "Thermodynamics of Formation of Porous Polymeric Membrane from Solutions," Polymer Journal, vol. 23, No. 5, pp. 435-444 (1991).
Covidien Brochure, "Endo GIA™ Black Reload with Tri-Staple™ Technology," (2012), 2 pages.
Biomedical Coatings, Fort Wayne Metals, Research Products Corporation, obtained online at www.fwmetals.com on Jun. 21, 2010 (1 page).
The Sodem Aseptic Battery Transfer Kit, Sodem Systems, 2000, 3 pages.
C.C. Thompson et al., "Peroral Endoscopic Reduction of Dilated Gastrojejunal Anastomosis After Roux-en-Y Gastric Bypass: A Possible New Option for Patients with Weight Regain," Surg Endosc (2006) vol. 20., pp. 1744-1748.
Serial Communication Protocol; Michael Lemmon Feb. 1, 2009; http://www3.nd.edu/~lemmon/courses/ee224/web-manual/web-manual/lab12/node2.html; Wayback Machine to Apr. 29, 2012.
Lyon et al. "The Relationship Between Current Load and Temperature for Quasi-Steady State and Transient Conditions," SPIE—International Society for Optical Engineering. Proceedings, vol. 4020, (pp. 62-70), Mar. 30, 2000.
Anonymous: "Sense & Control Application Note Current Sensing Using Linear Hall Sensors," Feb. 3, 2009, pp. 1-18. Retrieved from the Internet: URL: http://www.infineon.com/dgdl/Current_Sensing_Rev.1.1.pdf?fileId=db3a304332d040720132d939503e5f17 [retrieved on Oct. 18, 2016].
Mouser Electronics, "LM317M 3-Terminal Adjustable Regulator with Overcurrent/Overtemperature Self Protection", Mar. 31, 2014 (Mar. 31, 2014), XP0555246104, Retrieved from the Internet: URL: http://www.mouser.com/ds/2/405/lm317m-440423.pdf, pp. 1-8.
Mouser Electronics, "LM317 3-Terminal Adjustable Regulator with Overcurrent/Overtemperature Self Protection", Sep. 30, 2016 (Sep. 30, 2016), XP0555246104, Retrieved from the Internet: URL: http://www.mouser.com/ds/2/405/lm317m-440423.pdf, pp. 1-9.
Cuper et al., "The Use of Near-Infrared Light for Safe and Effective Visualization of Subsurface Blood Vessels to Facilitate Blood Withdrawal in Children," Medical Engineering & Physics, vol. 35, No. 4, pp. 433-440 (2013).
Yan et al., Comparison of the effects of Mg—6Zn and Ti—3Al—2.5V alloys on TGF-β/TNF-α/VEGF/b-FGF in the healing of the intestinal track in vivo, Biomed. Mater. 9 (2014), 11 pages.

(56) **References Cited**

OTHER PUBLICATIONS

Pellicer et al. "On the biodegradability, mechanical behavior, and cytocompatibility of amorphous Mg72Zn23Ca5 and crystalline Mg70Zn23Ca5Pd2 alloys as temporary implant materials," J Biomed Mater Res Part A ,2013:101A:502-517.
Anonymous, Analog Devices Wiki, Chapter 11: The Current Mirror, Aug. 20, 2017, 22 pages. https://wiki.analog.com/university/courses/electronics/text/chapter-11?rev=1503222341.
Yan et al., "Comparison of the effects of Mg—6Zn and titanium on intestinal tract in vivo," J Mater Sci: Mater Med (2013), 11 pages.
Brar et al., "Investigation of the mechanical and degradation properties of Mg—Sr and Mg—Zn—Sr alloys for use as potential biodegradable implant materials," J. Mech. Behavior of Biomed. Mater. 7 (2012) pp. 87-95.
Texas Instruments: "Current Recirculation and Decay Modes," Application Report SLVA321—Mar. 2009; Retrieved from the Internet: URL:http://www.ti.com/lit/an/slva321/slva321 [retrieved on Apr. 25, 2017], 7 pages.
Qiu Li Loh et al.: "Three-Dimensional Scaffolds for Tissue Engineering Applications: Role of Porosity and Pore Size", Tissue Engineering Part B-Reviews, vol. 19, No. 6, Dec. 1, 2013, pp. 485-502.
Gao et al., "Mechanical Signature Enhancement of Response Vibrations in the Time Lag Domain," Fifth International Congress on Sound and Vibration, Dec. 15-18, 1997, pp. 1-8.
Trendafilova et al., "Vibration-based Methods for Structural and Machinery Fault Diagnosis Based on Nonlinear Dynamics Tools," In: Fault Diagnosis in Robotic and Industrial Systems, IConcept Press LTD, 2012, pp. 1-29.
Youtube.com; video by Fibran (retrieved from URL https://www.youtube.com/watch?v=vN2Qjt51gFQ); (Year: 2018).
Foot and Ankle: Core Knowledge in Orthopaedics; by DiGiovanni MD, Elsevier; (p. 27, left column, heading "Materials for Soft Orthoses", 7th bullet point); (Year: 2007).
Lee, Youbok, "Antenna Circuit Design for RFID Applications," 2003, pp. 1-50, DS00710C, Microchip Technology Inc., Available: http://ww1.microchip.com/downloads/en/AppNotes/00710c.pdf.
Kawamura, Atsuo, et al. "Wireless Transmission of Power and Information Through One High-Frequency Resonant AC Link Inverter for Robot Manipulator Applications," Journal, May/Jun. 1996, pp. 503-508, vol. 32, No. 3, IEEE Transactions on Industry Applications.
Honda HS1332AT and ATD Model Info, powerequipment.honda.com [online], published on or before Mar. 22, 2016, [retrieved on May 31, 2019], retrieved from the Internet [URL: https://powerequipment.honda.com/snowblowers/models/hss1332at-hss1332atd] {Year: 2016).
Slow Safety Sign, shutterstock.com [online], published on or before May 9, 2017, [retrieved on May 31, 2019], retrieved from the https://www.shutterstock.com/image-victor/slow-safety-sign-twodimensional-turtle-symbolizing- . . . see PDF in file for full URL] (Year: 2017).
Warning Sign Beveled Buttons, by Peter, flarestock.com [online], published on or before Jan. 1, 2017, [retrieved on Jun. 4, 2019], retrieved from the Internet [URL: https://www.flarestock.com/stock-images/warning-sign-beveled-buttons/70257] (Year: 2017).
Arrow Sign Icon Next Button, by Blan-k, shutterstock.com [online], published on or before Aug. 6, 2014, [retrieved on Jun. 4, 2019], retrieved from the Internet [URL:https://www.shutterstock.com/de/image-vector/arrow-sign-icon-next-button-navigation-207700303?irgwc=1&utm . . . see PDF in file for full URL] (Year: 2014).
Elite Icons, by smart/icons, iconfinder.com [online], published on Aug. 18, 2016, [retrieved on Jun. 4, 2019], retrieved from the Internet [URL: https://www.iconfinder.com/iconsets/elite] (Year: 2016).
Tutorial overview of inductively coupled RFID Systems, UPM, May 2003, pp. 1-7, UPM Rafsec, <http://cdn.mobiusconsulting.com/papers/rfidsystems.pdf>.
Schroeter, John, "Demystifying UHF Gen 2 RFID, HF RFID," Online Article, Jun. 2, 2008, pp. 1-3, <https://www.edn.com/design/industrial-control/4019123/Demystifying-UHF-Gen-2-RFID-HF-RFID>.
Adeeb, et al., "An Inductive Link-Based Wireless Power Transfer System for Biomedical Applications." Research Article, Nov. 14, 2011, pp. 1-12, vol. 2012, Article ID 879294, Hindawi Publishing Corporation.
Pushing Pixels (GIF), published on dribble.com, 2013.
Sodium stearate C18H35NaO2, Chemspider Search and Share Chemistry, Royal Society of Chemistry, pp. 1-3, 2015, http://www.chemspider.com/Chemical-Structure.12639.html, accessed May 23, 2016.
NF Monographs: Sodium Stearate, U.S. Pharmacopeia, http://www.pharmacopeia.cn/v29240/usp29nf24s0_m77360.html, accessed May 23, 2016.
Fischer, Martin H, "Colloid-Chemical Studies on Soaps", The Chemical Engineer, pp. 184-193, Aug. 1919.
V.K. Ahluwalia and Madhuri Goyal, A Textbook of Organic Chemistry, Section 19.11.3, p. 356, 2000.
A.V. Kasture and S.G. Wadodkar, Pharmaceutical Chemistry—II: Second Year Diploma in Pharmacy, Nirali Prakashan, p. 339, 2007.
Forum discussion regarding "Speed is Faster", published on Oct. 1, 2014 and retrieved on Nov. 8, 2019 from URL https://english.stackexchange.com/questions/199018/how-is-that-correct-speed-is-faster-or-prices-are-cheaper (Year: 2014).
"Understanding the Requirements of ISO/IEC 14443 for Type B Proximity Contactless Identification Cards," retrieved from https://www.digchip.com/application-notes/22/15746.php on Mar. 2, 2020, pp. 1-28 (Nov. 2005).
Jauchem, J.R., "Effects of low-level radio-frequency (3 kHz to 300 GHz) enery on human cardiovascular, reproductive, immune, and other systems: A review of the recent literatured," Int. J. Hyg. Environ. Health 211 (2008) 1-29.
Sandvik, "Welding Handbook," https://www.meting.rs/wp-content/uploads/2018/05/welding-handbook.pdf, retrieved on Jun. 22, 2020. pp. 5-6.
Ludois, Daniel C., "Capacitive Power Transfer for Rotor Field Current in Synchronous Machines," IEEE Transactions on Power Electronics, Institute of Electrical and Electronics Engineers, USA, vol. 27, No. 11, Nov. 1, 2012, pp. 4638-4645.
Rotary Systems: Sealed Slip Ring Categories, Rotary Systems, May 22, 2017, retrieved from the internet: http://web.archive.org/we/20170522174710/http:/rotarysystems.com: 80/slip-rings/sealed/, retrieved on Aug. 12, 2020, pp. 1-2.
IEEE Std 802.3-2012 (Revision of IEEE Std 802.3-2008, published Dec. 28, 2012.
"ATM-MPLS Network Interworking Version 2.0, af-aic-0178.001" ATM Standard, The ATM Forum Technical Committee, published Aug. 2003.
Yang et al.; "4D printing reconfigurable, deployable and mechanically tunable metamaterials," Material Horizions, vol. 6, pp. 1244-1250 (2019).
"Council Directive 93/42/EEC of Jun. 14, 1993 Concerning Medical Devices," Official Journal of the European Communities, L&C. Ligislation and Competition, S, No. L 169, Jun. 14, 1993, pp. 1-43.
Arjo Loeve et al., Scopes Too Flexible . . . and Too Stiff, 2010, IEEE Pulse, Nov./Dec. 2010 (Year: 2010), 16 pages.
Molina, "Low Level Reader Protocol (LLRP)," Oct. 13, 2010, pp. 1-198.
Makerbot, 10 Advantages of 3D Printing, 2020 (retrieved via the wayback machine), Makerbot.com (Year: 2020).
U.S. Appl. No. 62/798,651, filed Jan. 30, 2019.
U.S. Appl. No. 62/840,602, filed Apr. 30, 2019.
U.S. Appl. No. 19/027,717, entitled "Method for Creating a Flexible Staple Line," filed Jan. 17, 2025.

* cited by examiner

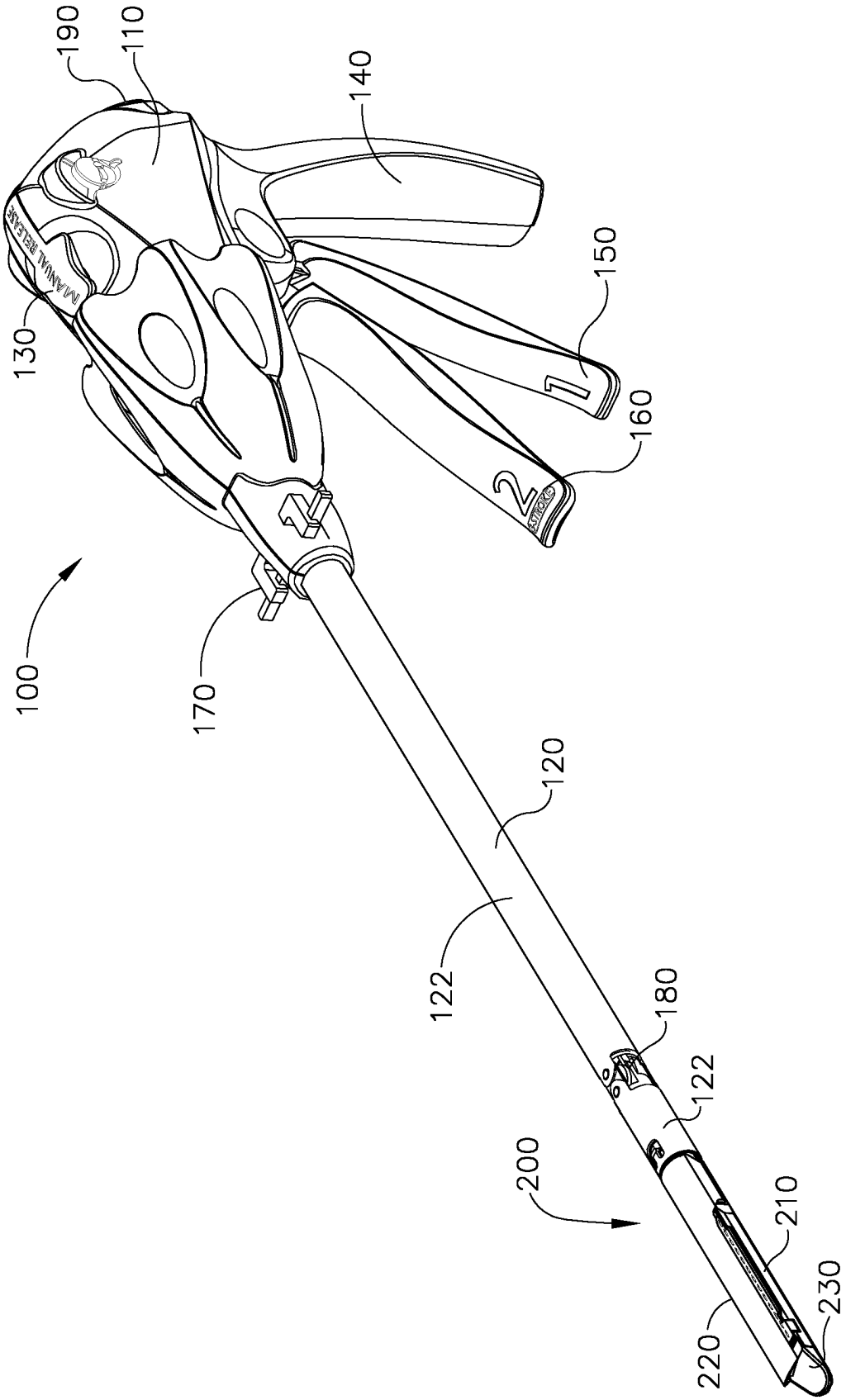
190
110
140
MANUAL RELEASE
130
150
160
100
170
120
122
180
122
200
210
230
220

FIG. 1

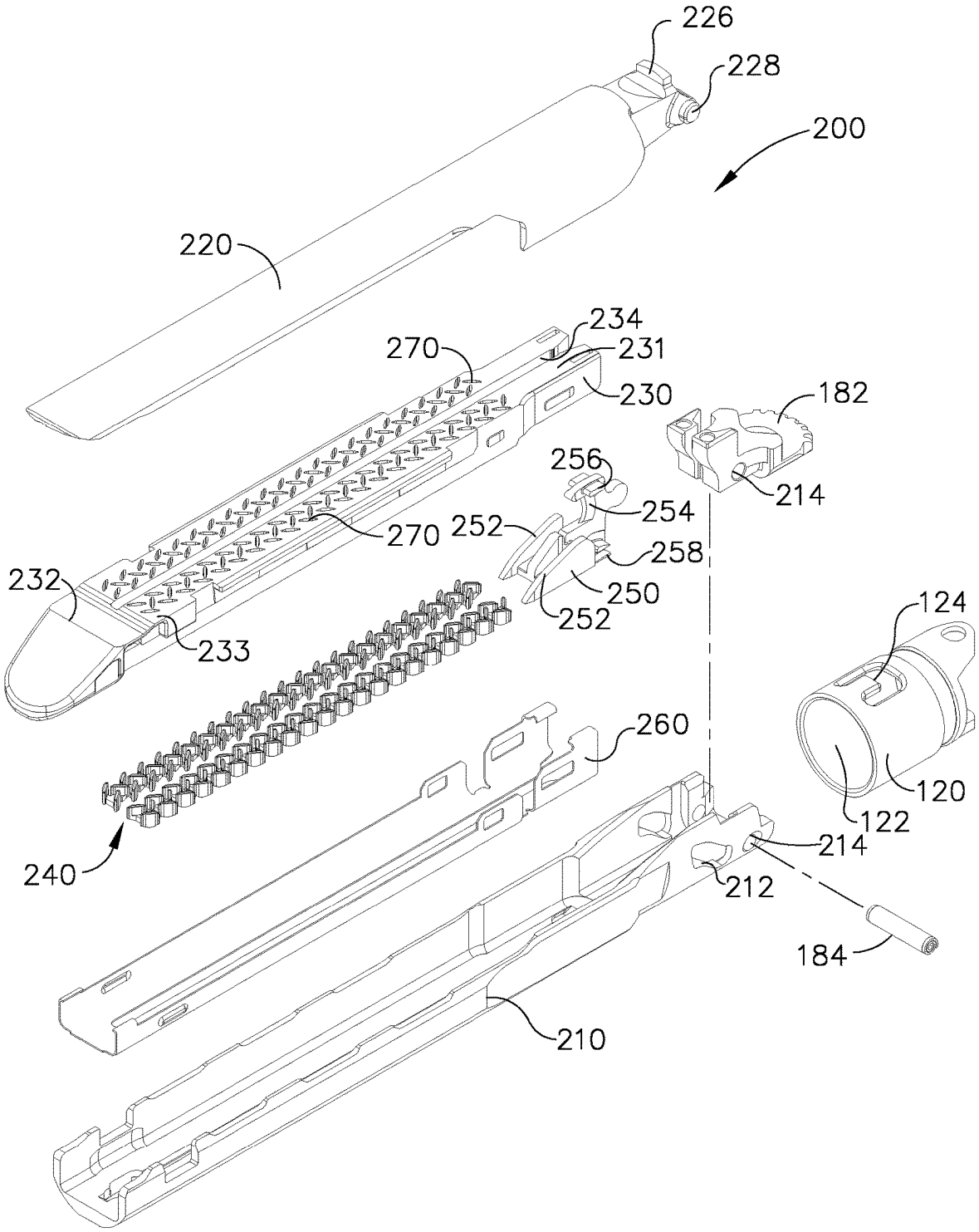
226
228
200
220
234
270
231
230
182
256
214
254
270
252
258
232
250
252
124
233
260
120
122
214
240
212
184
210

FIG. 2

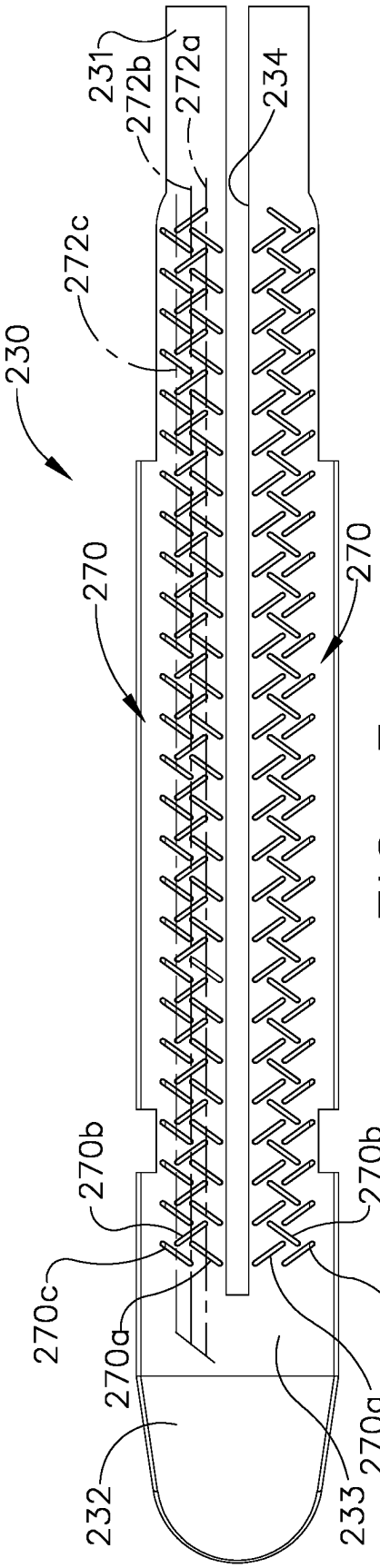
231
272b
272a
234
272c
230
270
270
270b
270b
270c
270c
270a
270a
232
233

FIG. 3

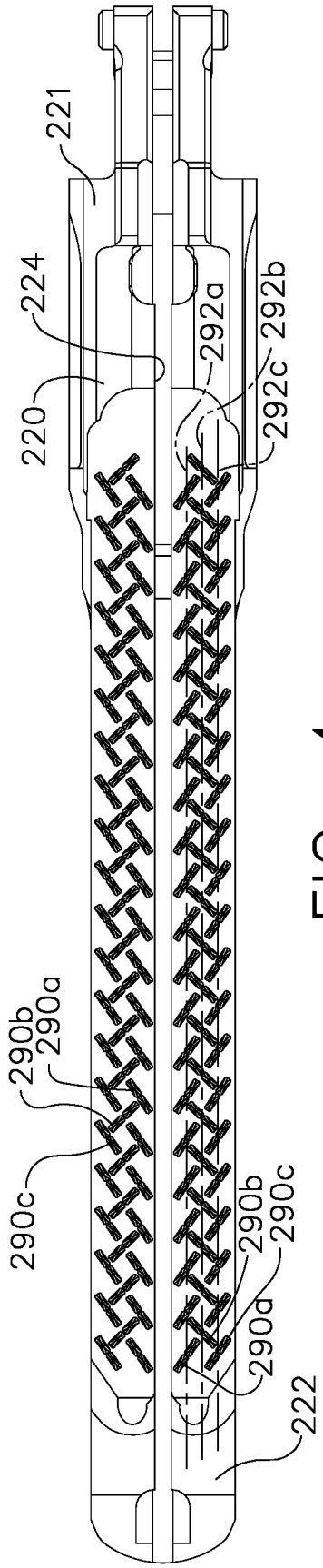
221
224
292a
292b
292c
220
290b
290a
290c
290b
290c
290a
222

FIG. 4

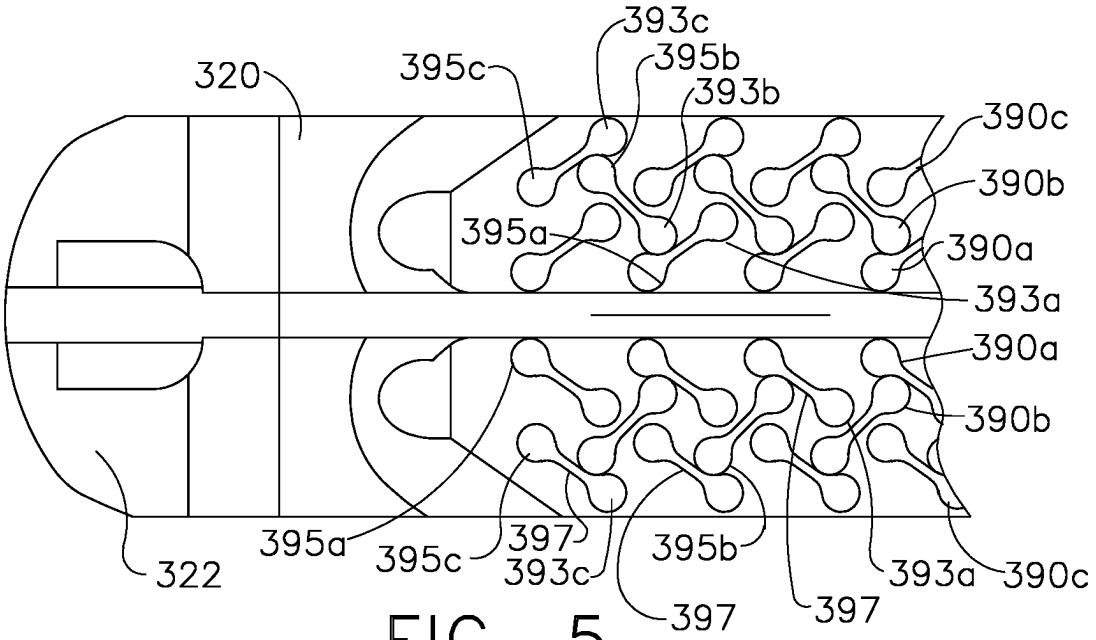
393c
395b
393b
320
395c
390c
390b
395a
390a
393a
390a
390b
322
395a
395c
397
393c
395b
393a
390c
397
397

FIG. 5

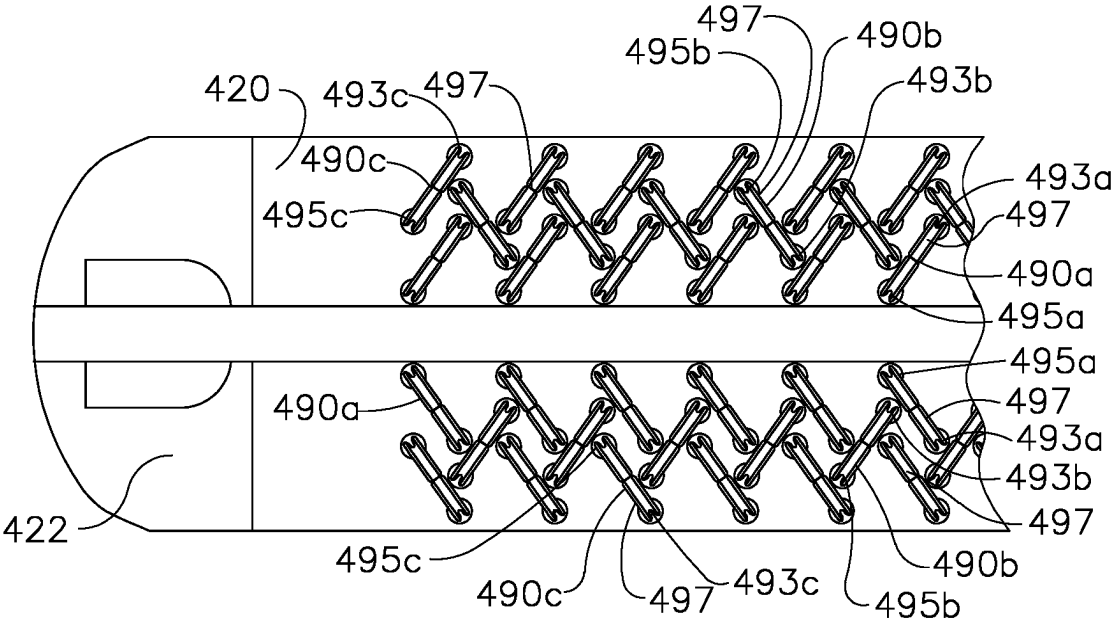
497
490b
495b
493b
420
493c
497
490c
493a
495c
497
490a
495a
495a
490a
497
493a
493b
422
497
495c
490b
490c
497
493c
495b

FIG. 6

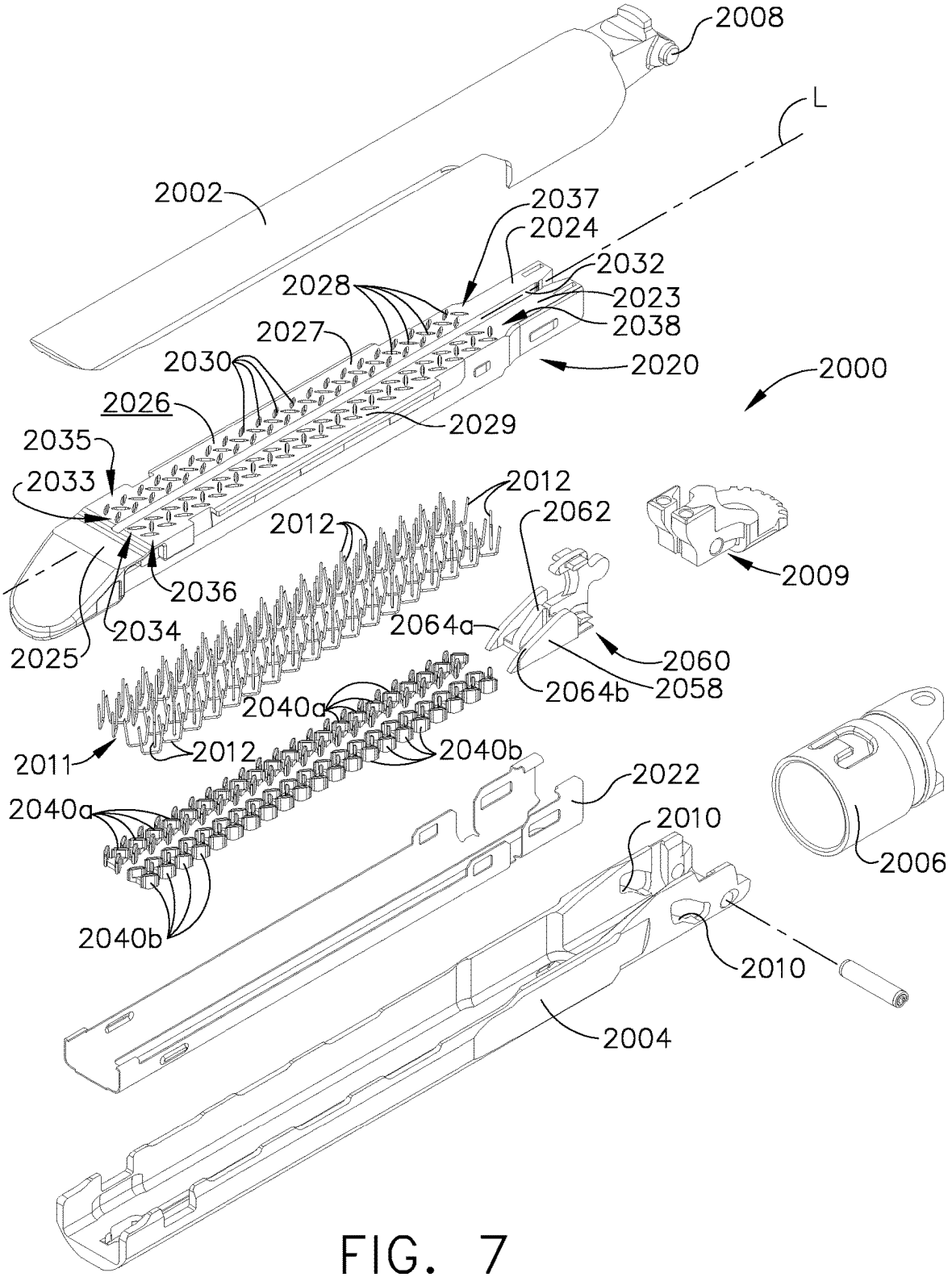
2008
L
2002
2037
2024
2032
2028
2023
2038
2027
2020
2000
2030
2026
2029
2035
2033
2012
2012
2062
2009
2036
2034
2064a
2060
2025
2064b
2058
2040a
2011
2012
2040b
2022
2040a
2010
2006
2040b
2010
2004

FIG. 7

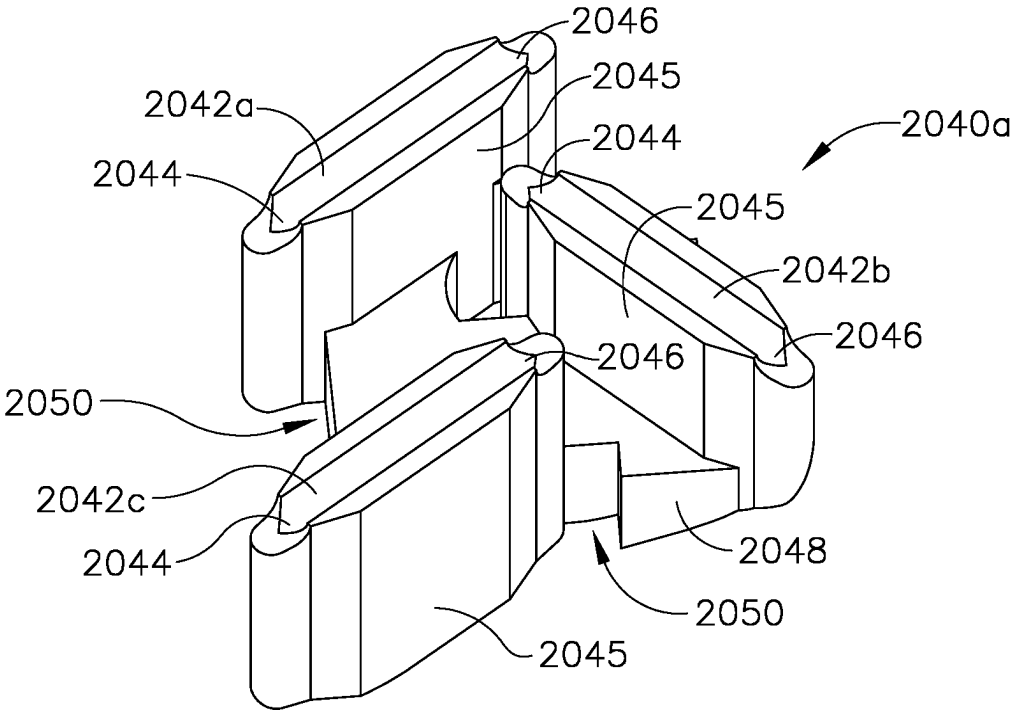
2046
2045
2042a
2044
2040a
2044
2045
2042b
2046
2046
2050
2042c
2044
2048
2050
2045

FIG. 8

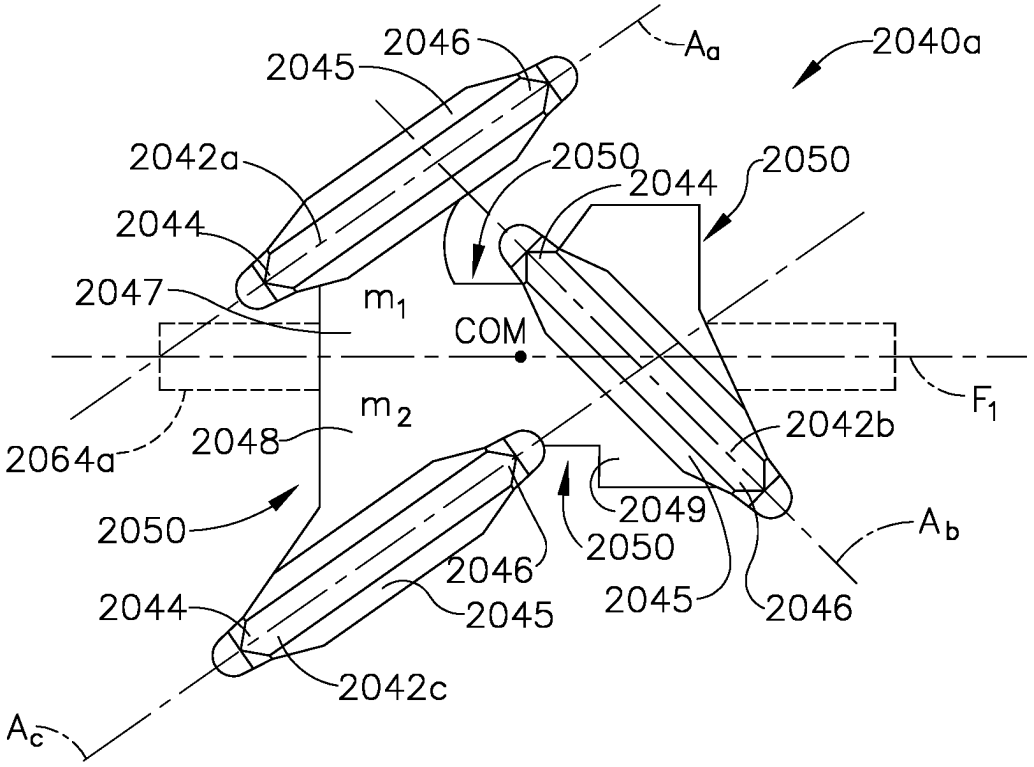
2046
A_a
2040a
2045
2042a
2050
2044
2050
2044
2047
m_1
COM
F_1
m_2
2042b
2064a
2048
2049
2050
A_b
2050
2046
2045
2046
2044
2045
2042c
A_c

FIG. 8A

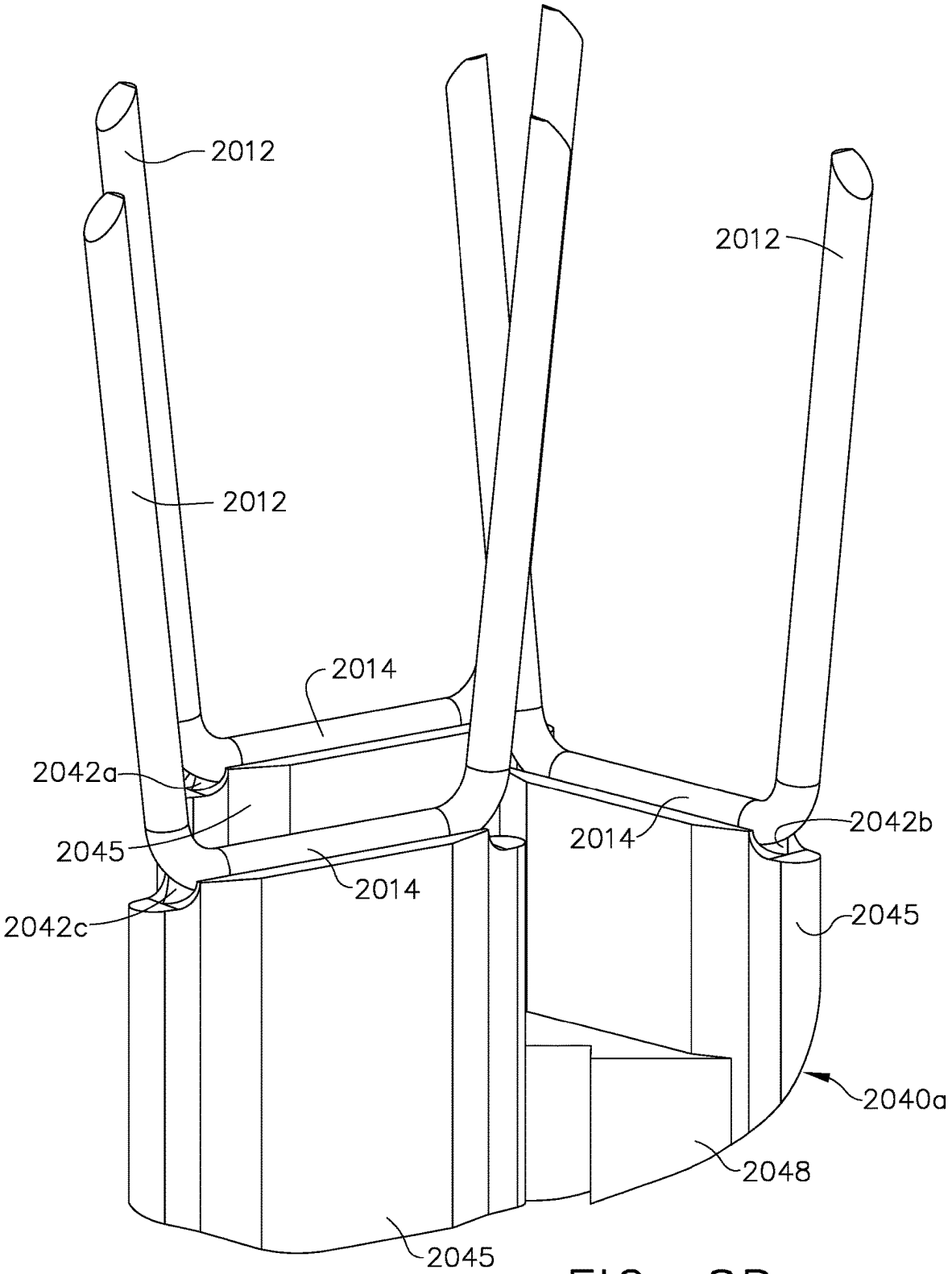
2012
2012
2012
2014
2042a
2045
2014
2014
2042b
2042c
2045
2040a
2048
2045

FIG. 8B

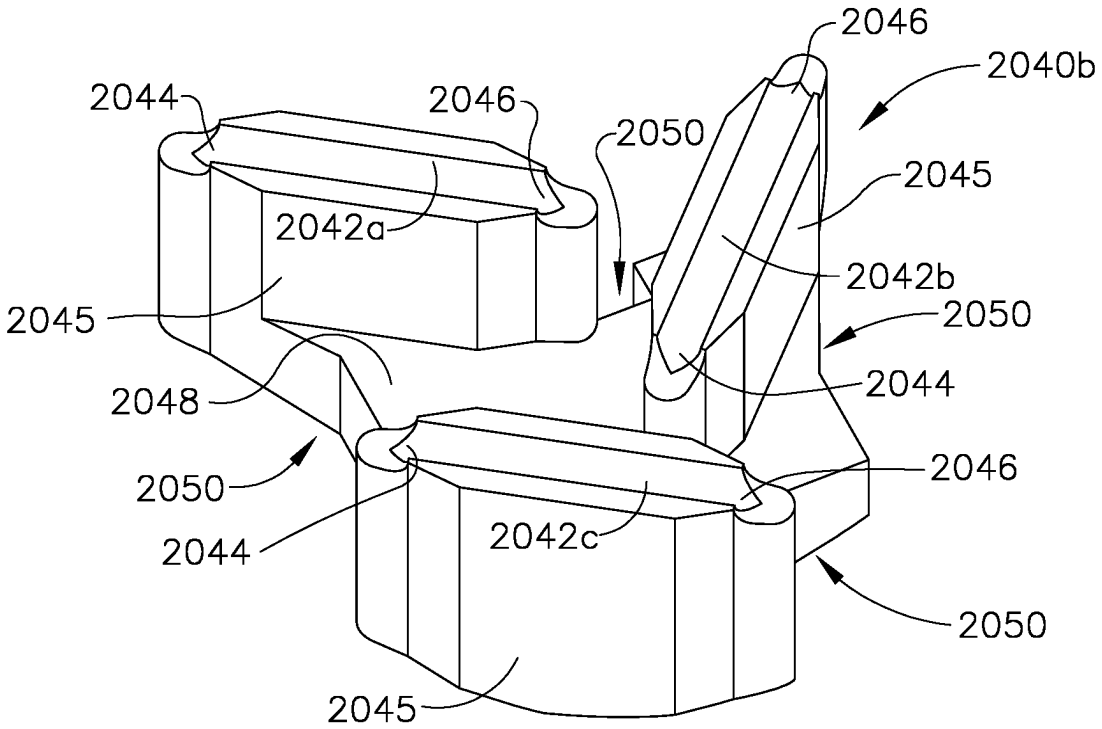
2046
2040b
2044
2046
2050
2045
2042a
2042b
2045
2050
2044
2048
2046
2050
2044
2042c
2050
2045

FIG. 8C

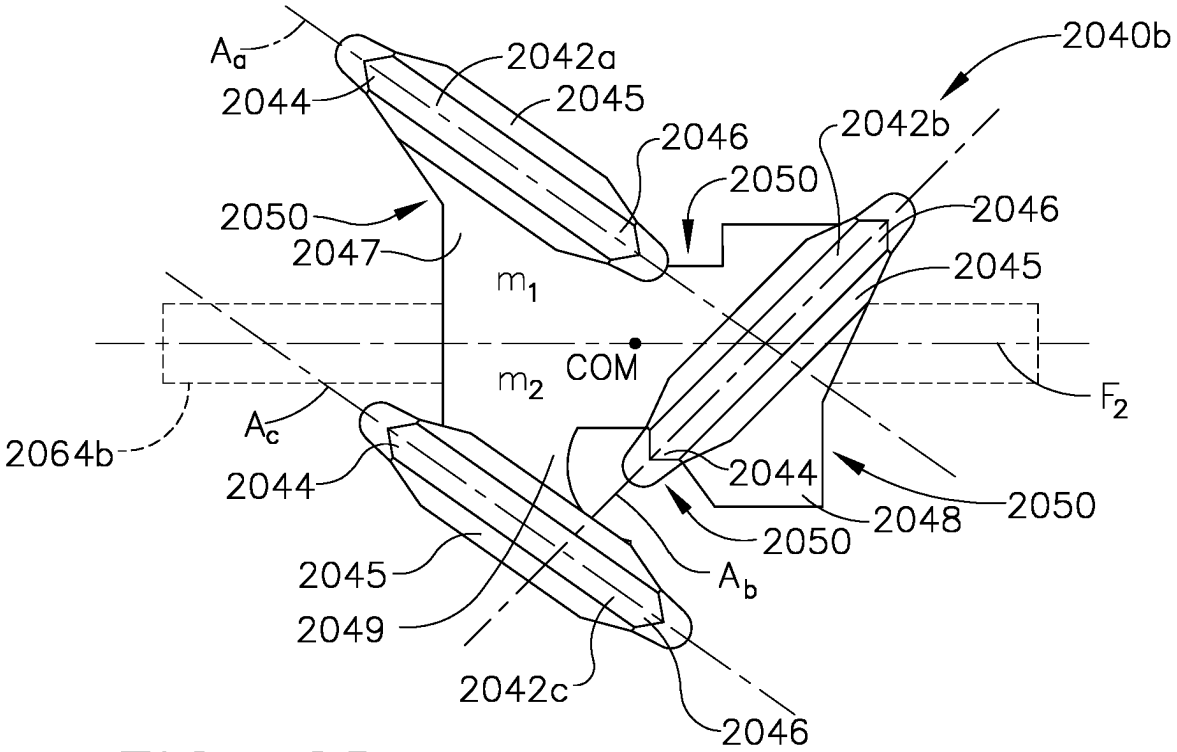
A_a
2042a
2040b
2044
2045
2046
2042b
2050
2050
2046
2047
2045
m_1
COM
m_2
F_2
A_c
2064b
2044
2044
2050
2048
2050
2045
A_b
2049
2042c
2046

FIG. 8D

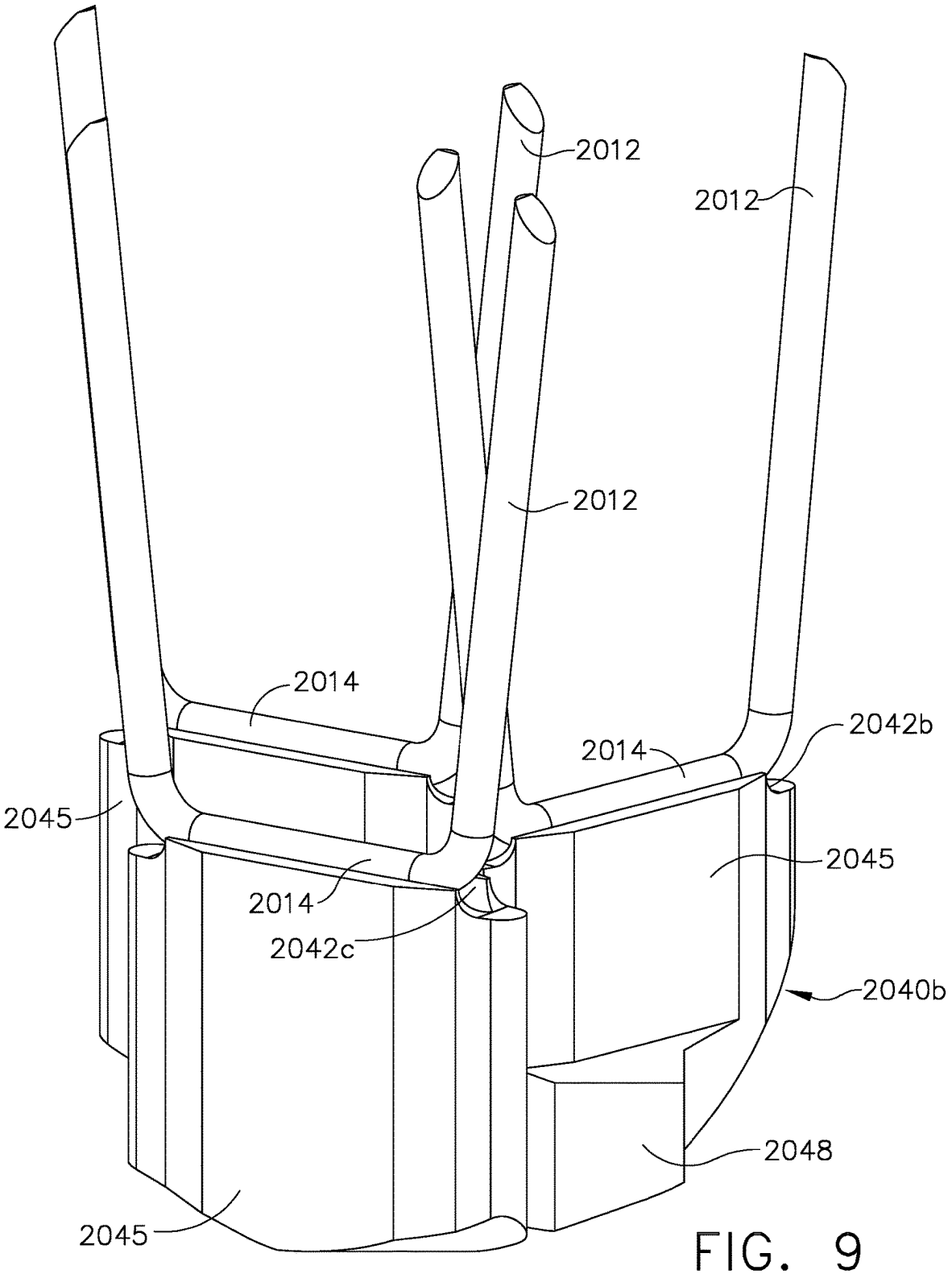
2012
2012
2012
2014
2014
2042b
2045
2045
2014
2042c
2040b
2048
2045

FIG. 9

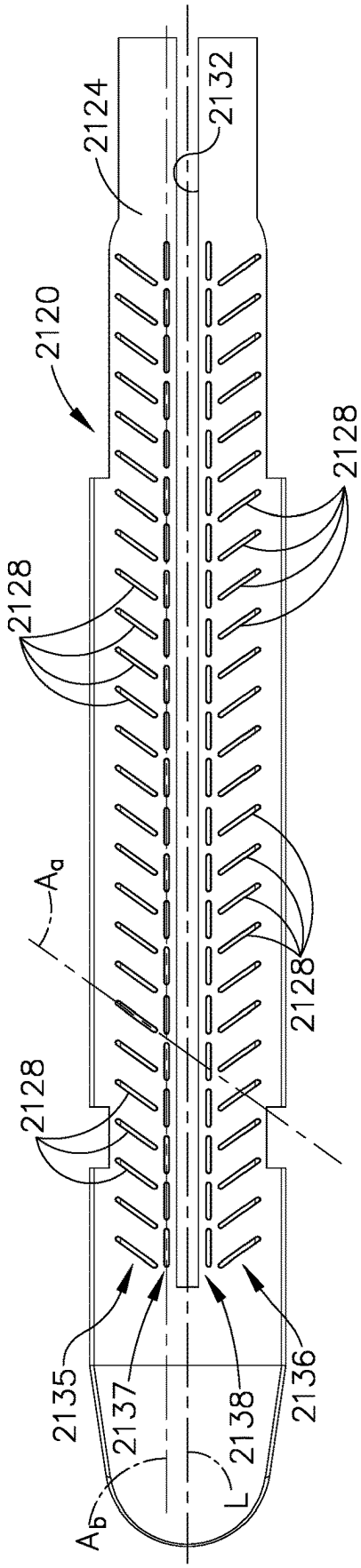
2124
2132
2120
2128
2128
2128
2128
A_a
2135
2137
2138
2136
A_b
L

FIG. 10

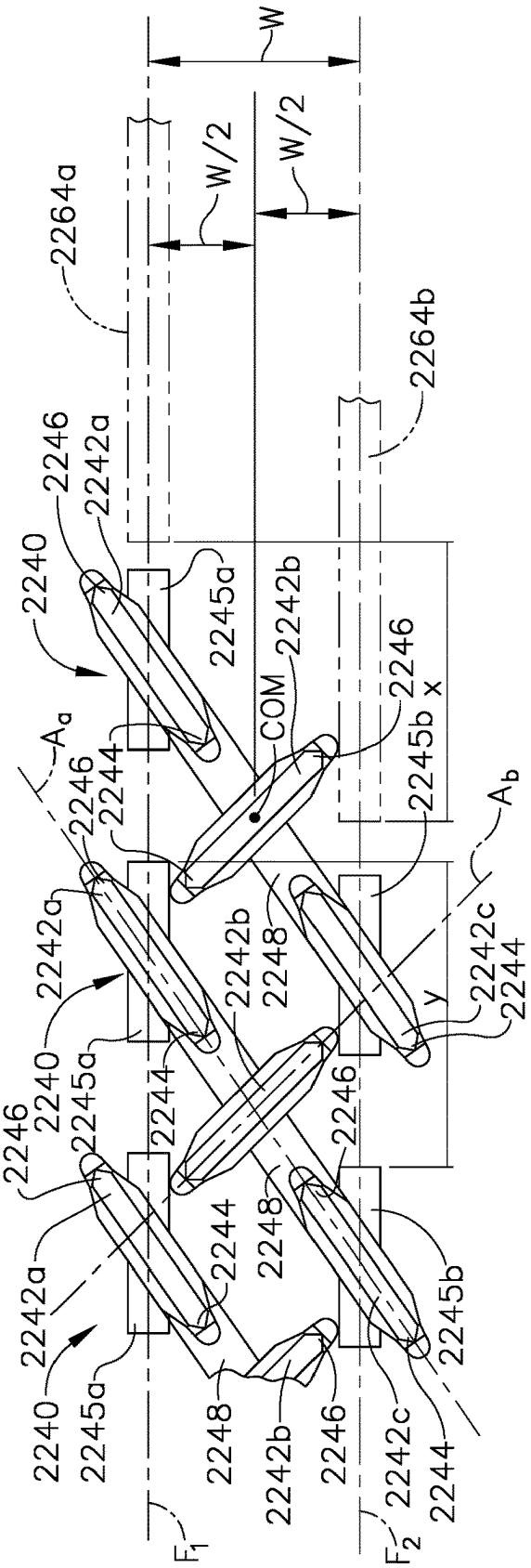
W
W/2
W/2
2264a
2264b
2246
2242a
2240
2245a
2242b
COM
2246
x
2245b
A_a
2244
2246
2242a
2242b
2248
2242c
2244
y
A_b
2240
2245a
2244
2246
2246
2242a
2244
2248
2245b
2240
2245a
2248
2242b
2246
2242c
2244
F_1
F_2

FIG. 11

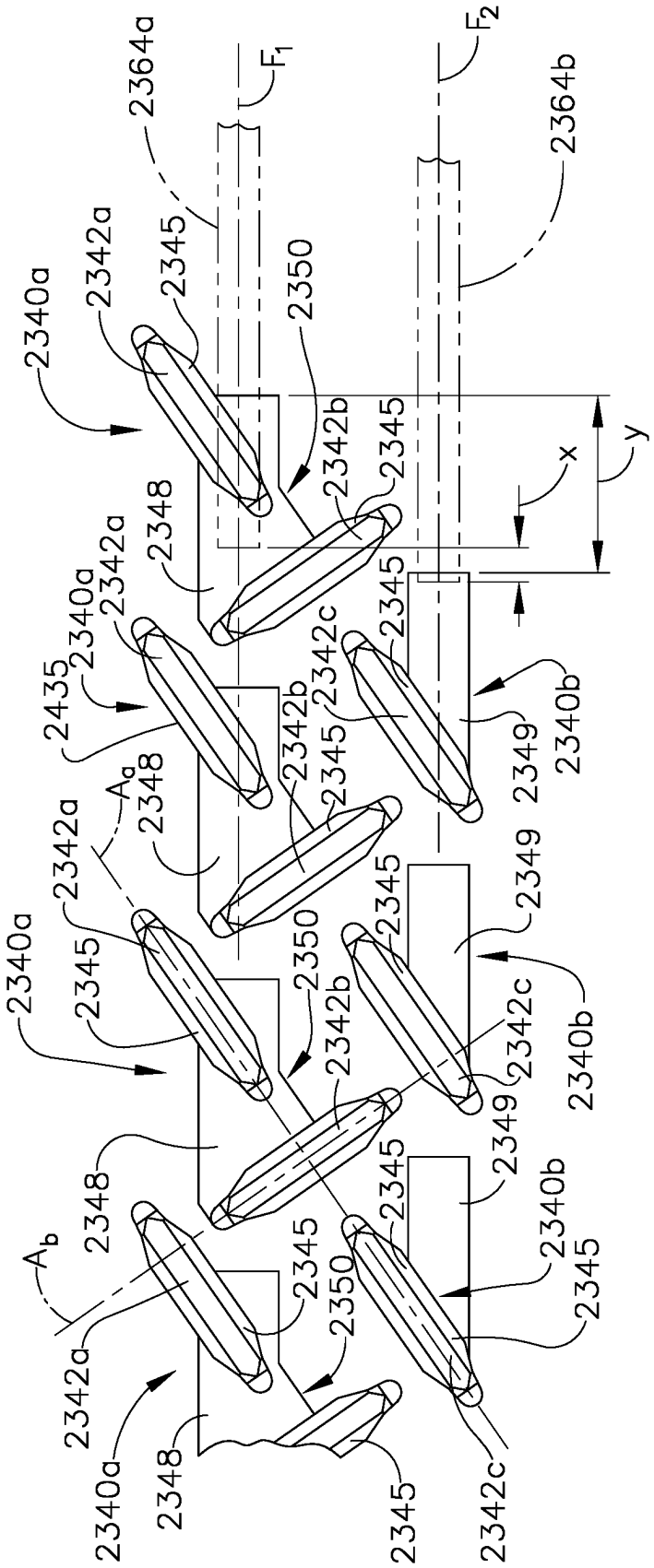
2364a
F1
F2
2364b
2340a
2342a
2345
2350
2342b
2348
2342c
2340b
2349
2435
Aa
Ab
x
y

FIG. 12

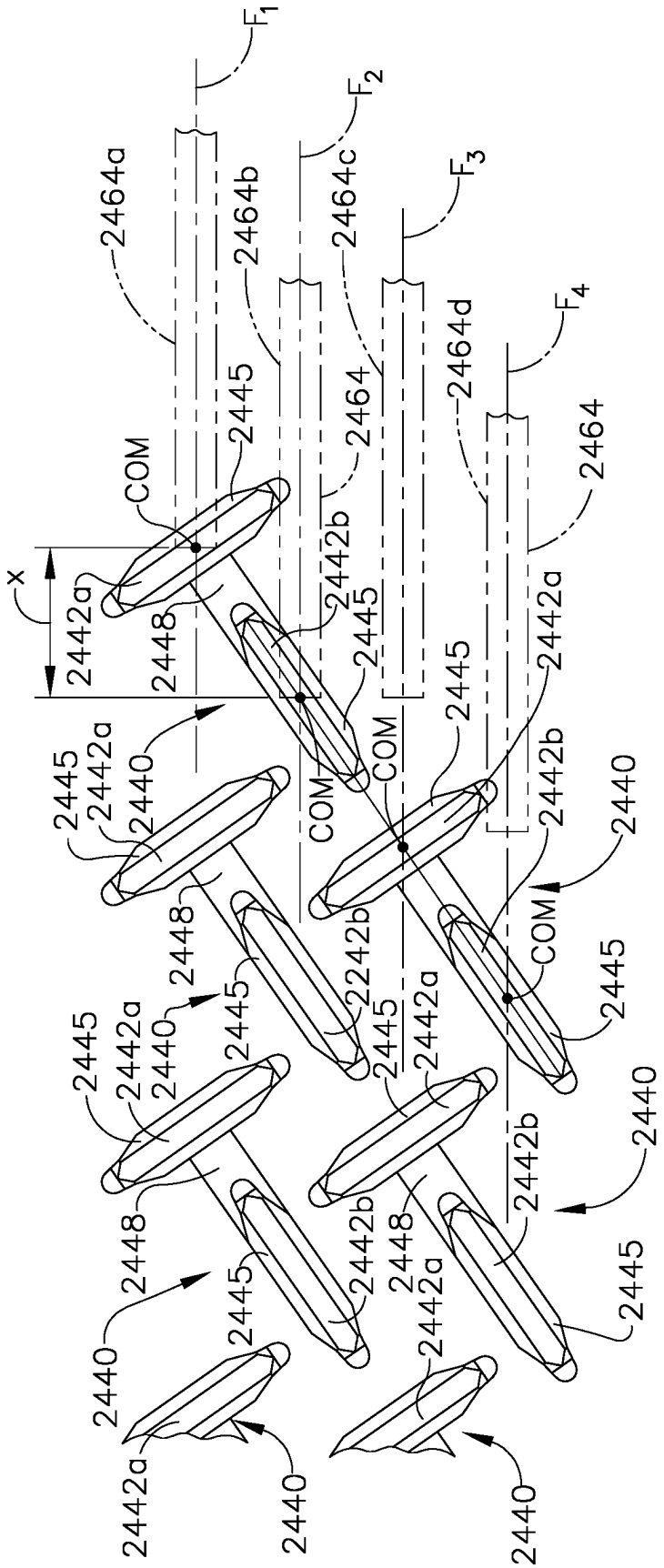
F1
F2
F3
F4
2464a
2464b
2464c
2464d
2464
2445
COM
2442a
2442b
2448
2440
x

FIG. 13

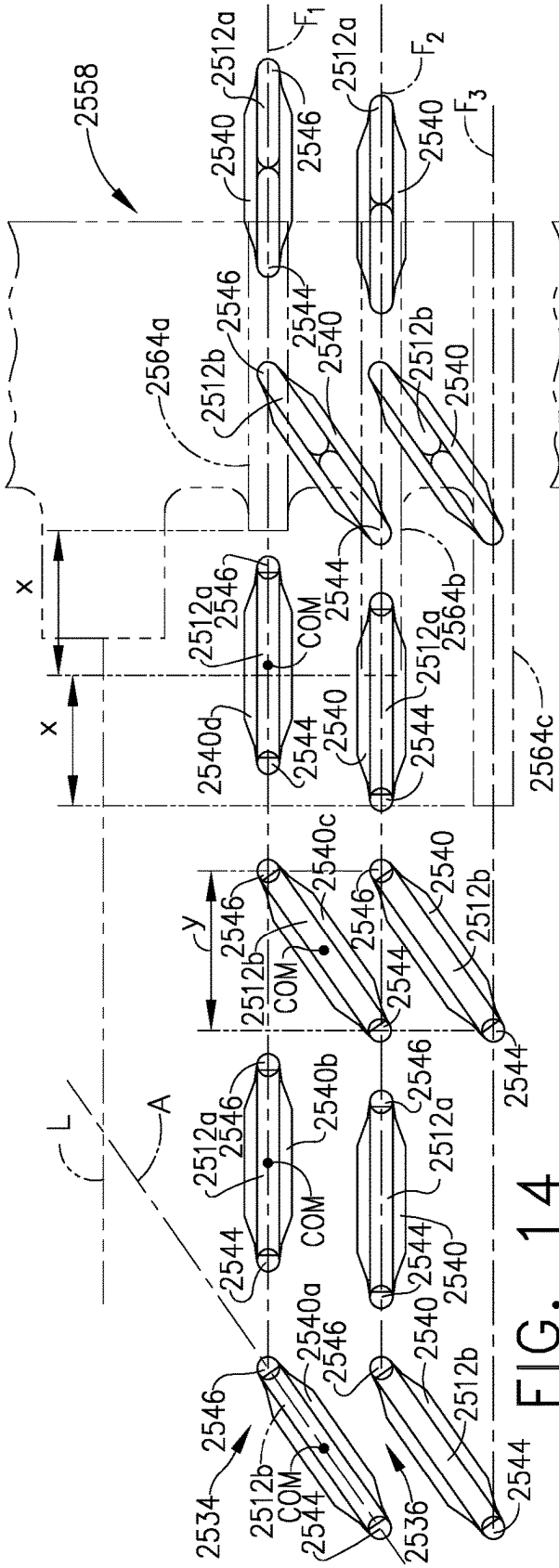
2558
2512a
2540
2546
2544
2564a
2512b
2564b
2564c
2540d
2540c
2540b
2540a
2534
2536
COM
x
y
L
A
F1
F2
F3

FIG. 14

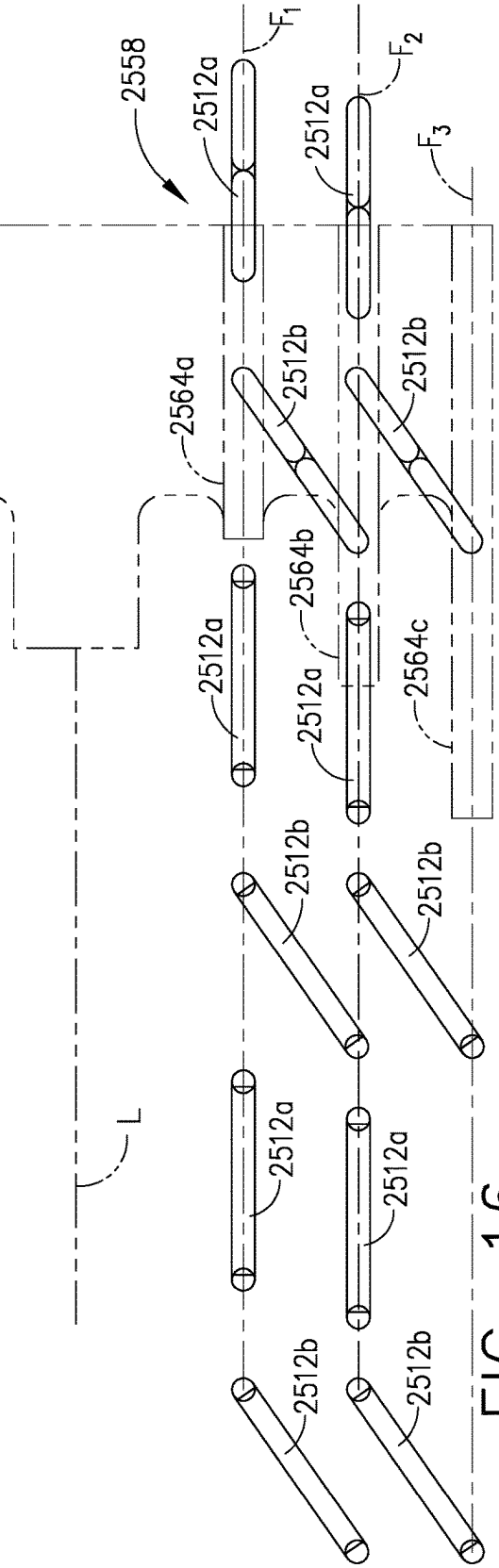
2558
2512a
2512b
2564a
2564b
2564c
L
F1
F2
F3

FIG. 16

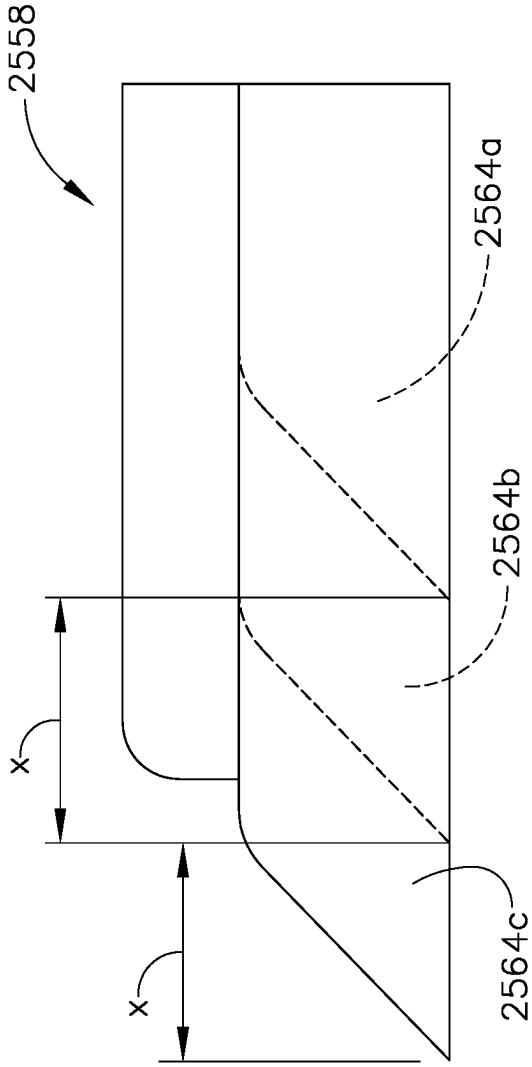

FIG. 15

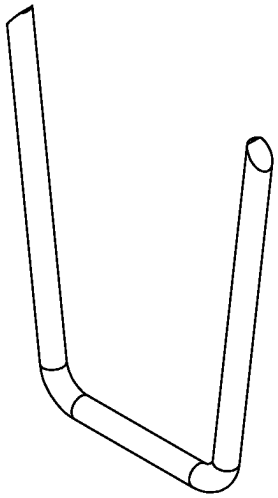

FIG. 17

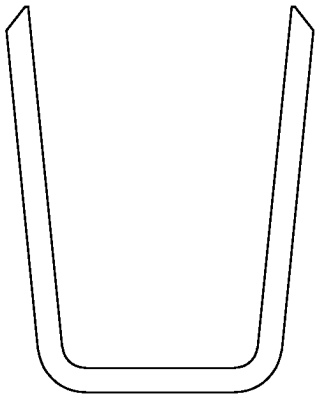

FIG. 18

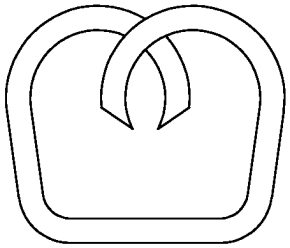

FIG. 19

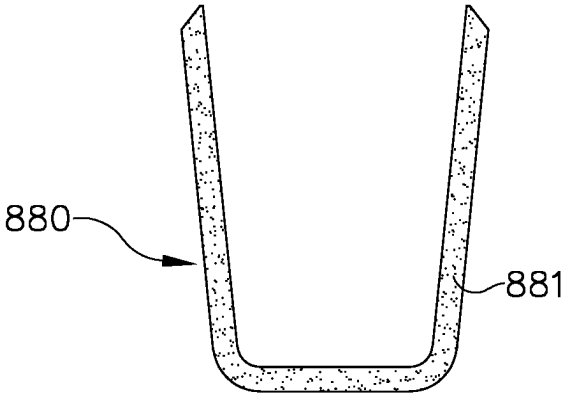

FIG. 20

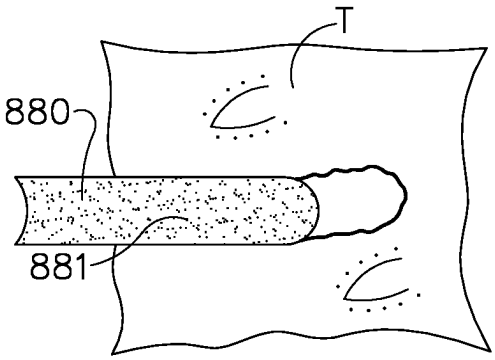

FIG. 21

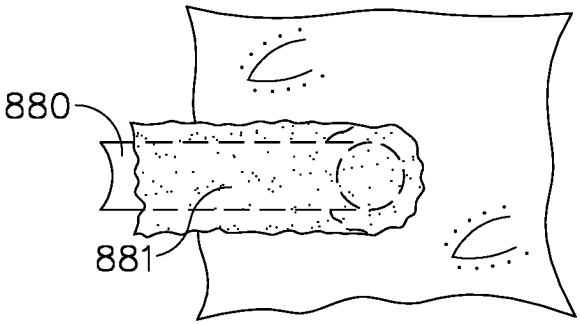

FIG. 22

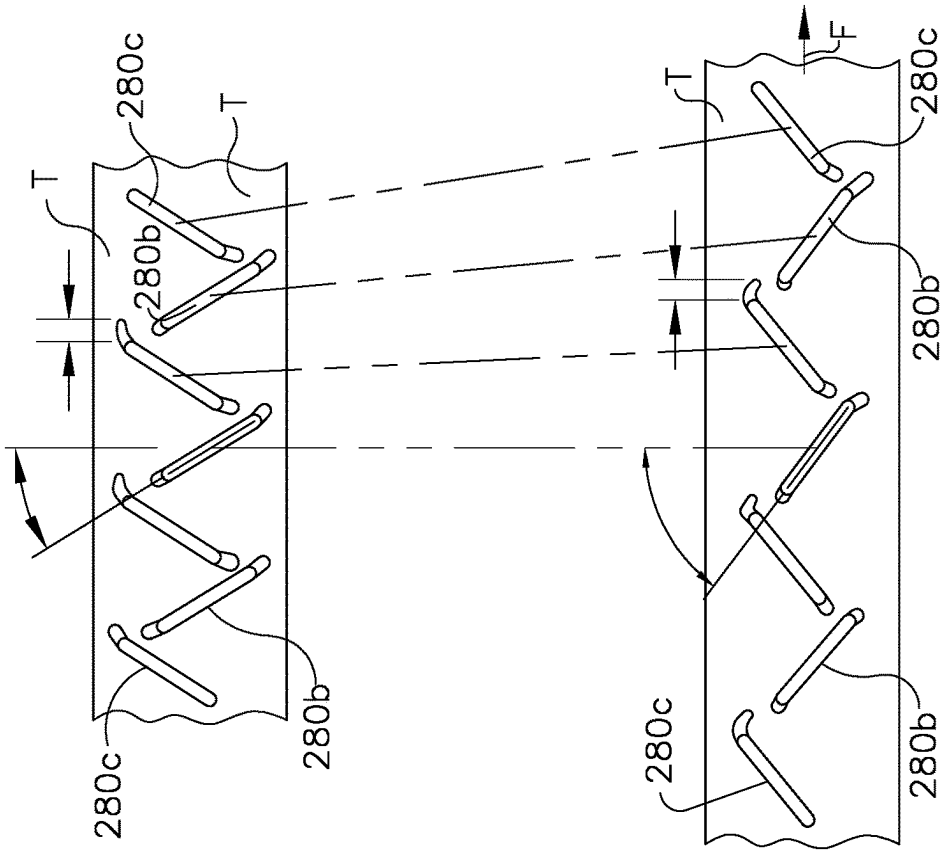
280c
T
280b
280c
280b
T
280c
T
280b
280c
280b
F

FIG. 24

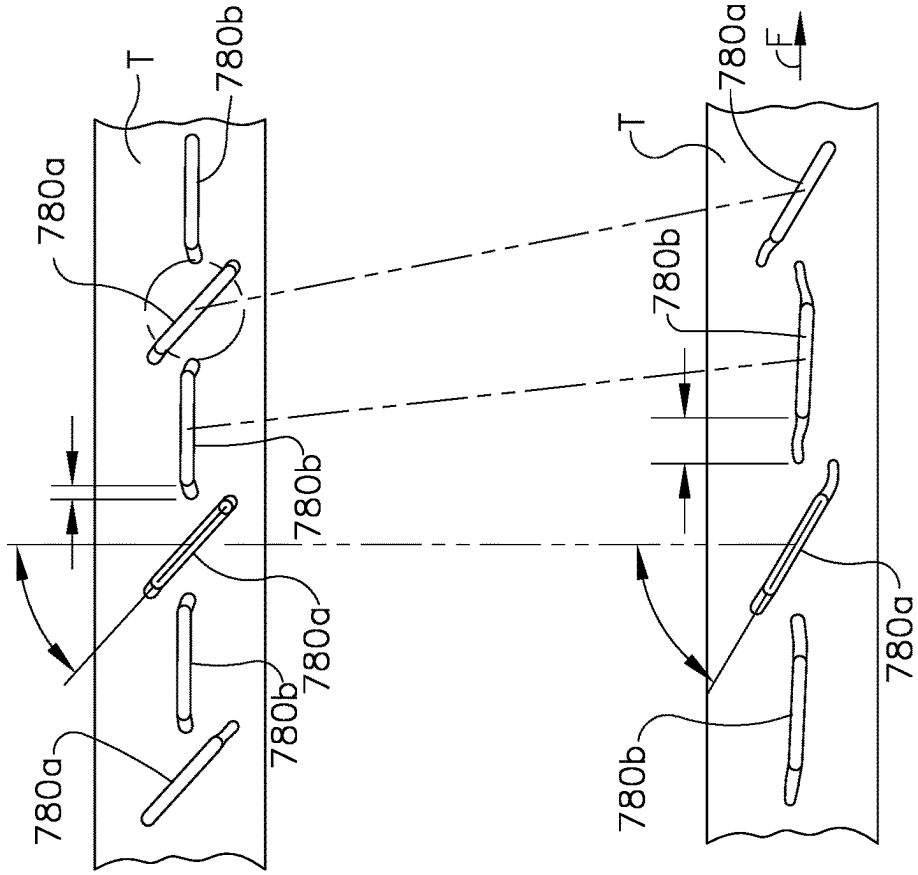
T
780b
780a
780b
780a
780b
780a
T
780a
780b
780b
780a
F

FIG. 23

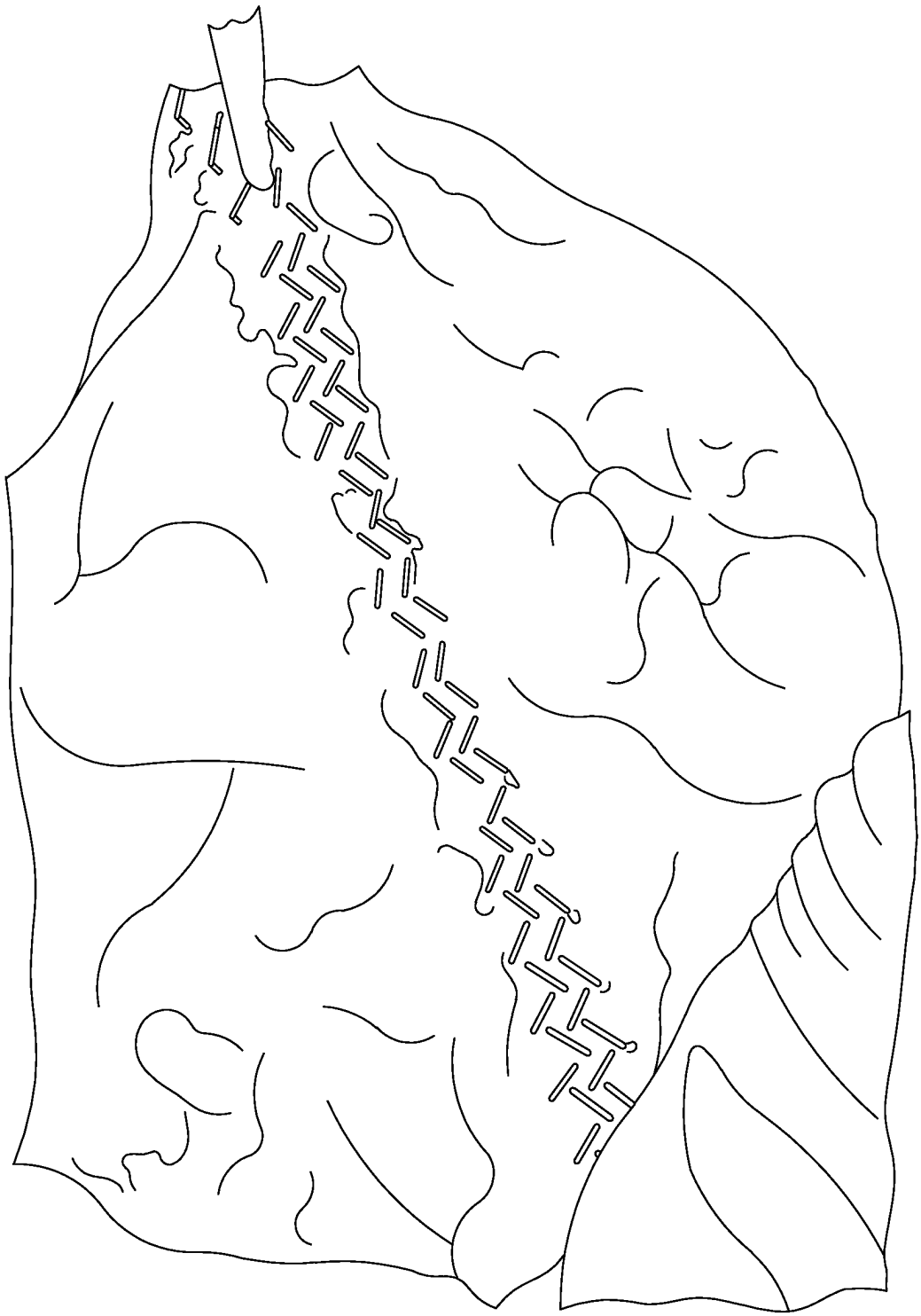

FIG. 25

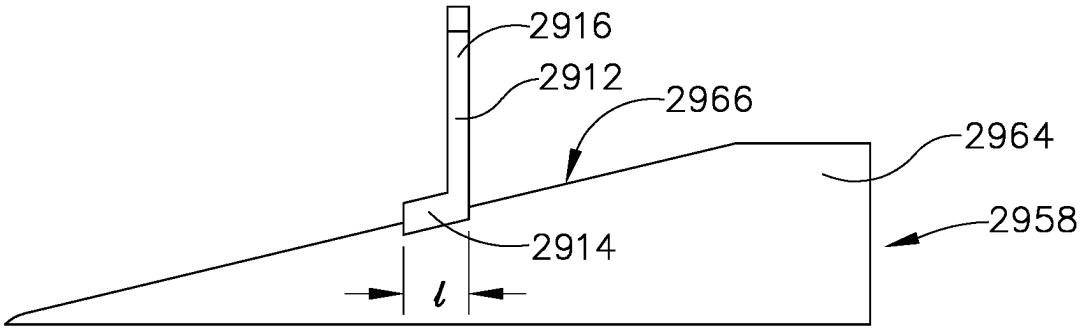

FIG. 26

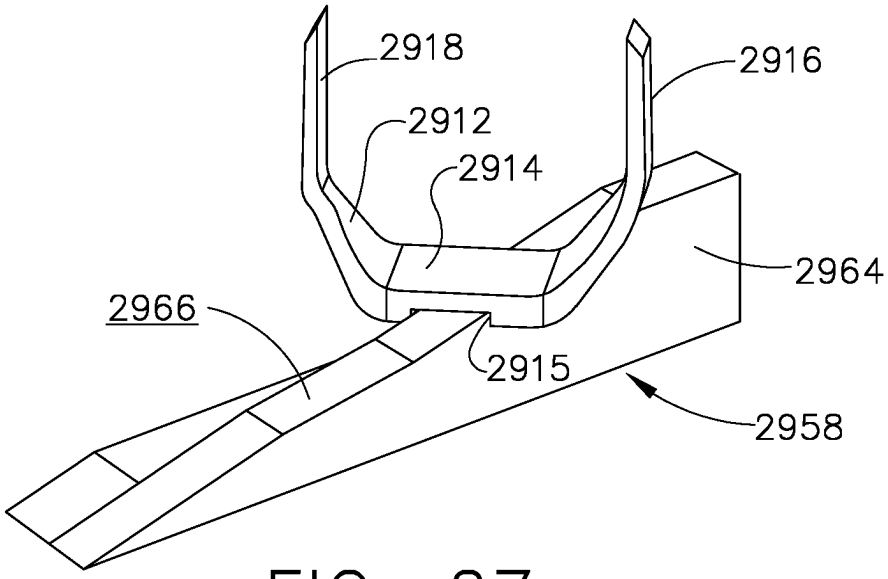

FIG. 27

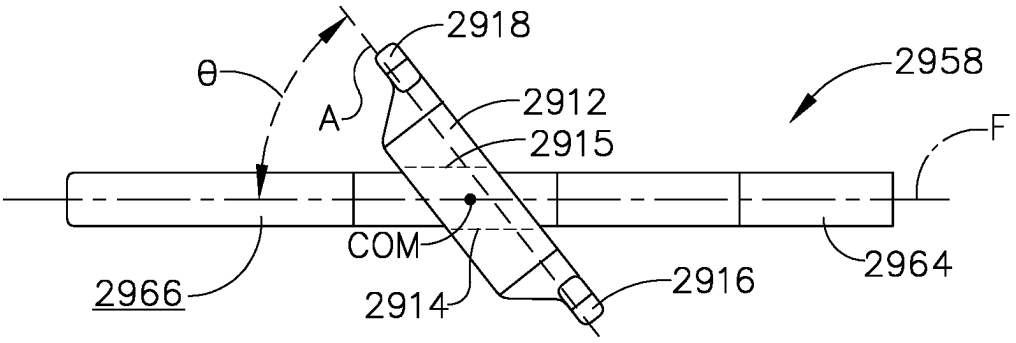

FIG. 28

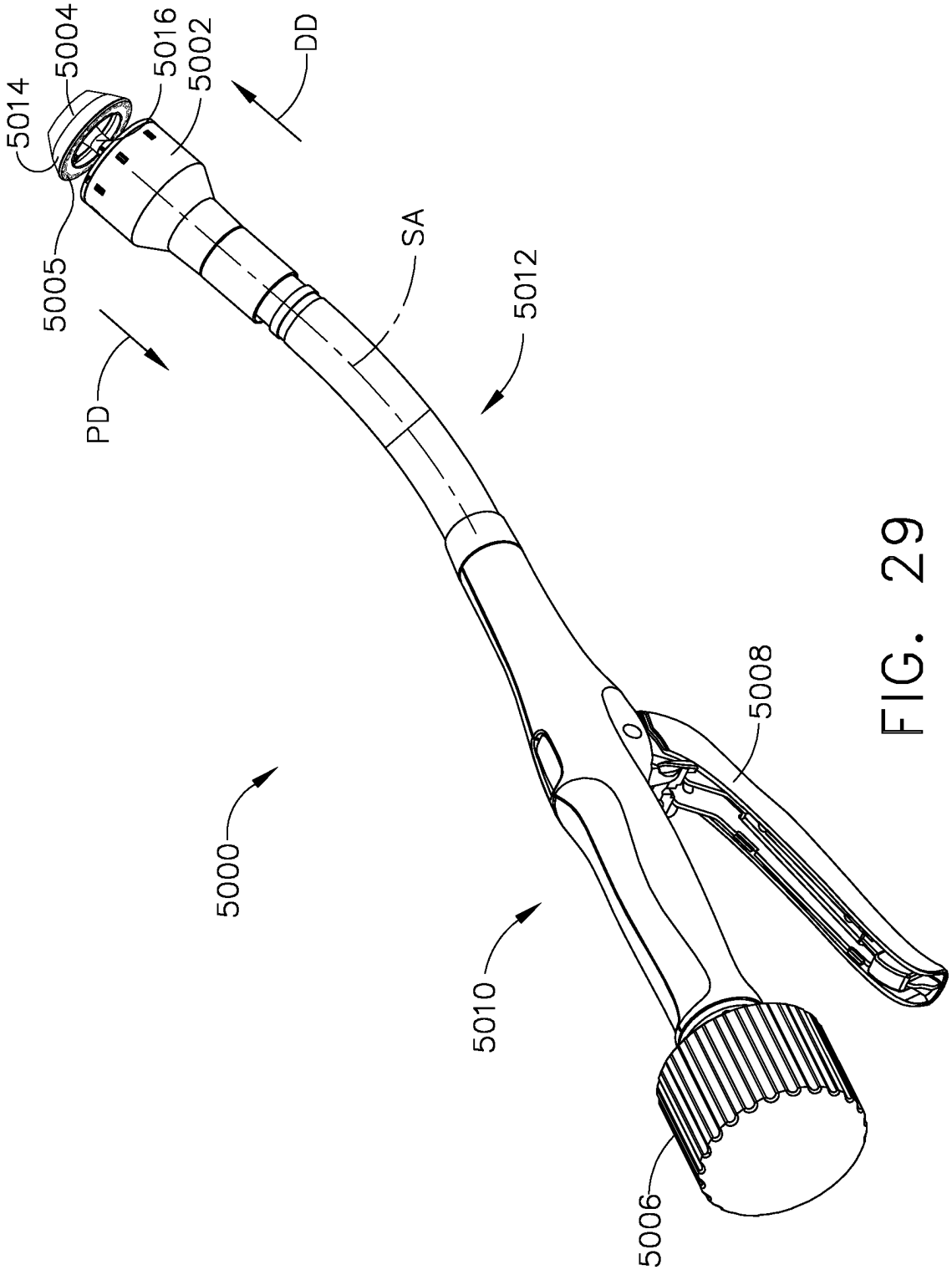

FIG. 29

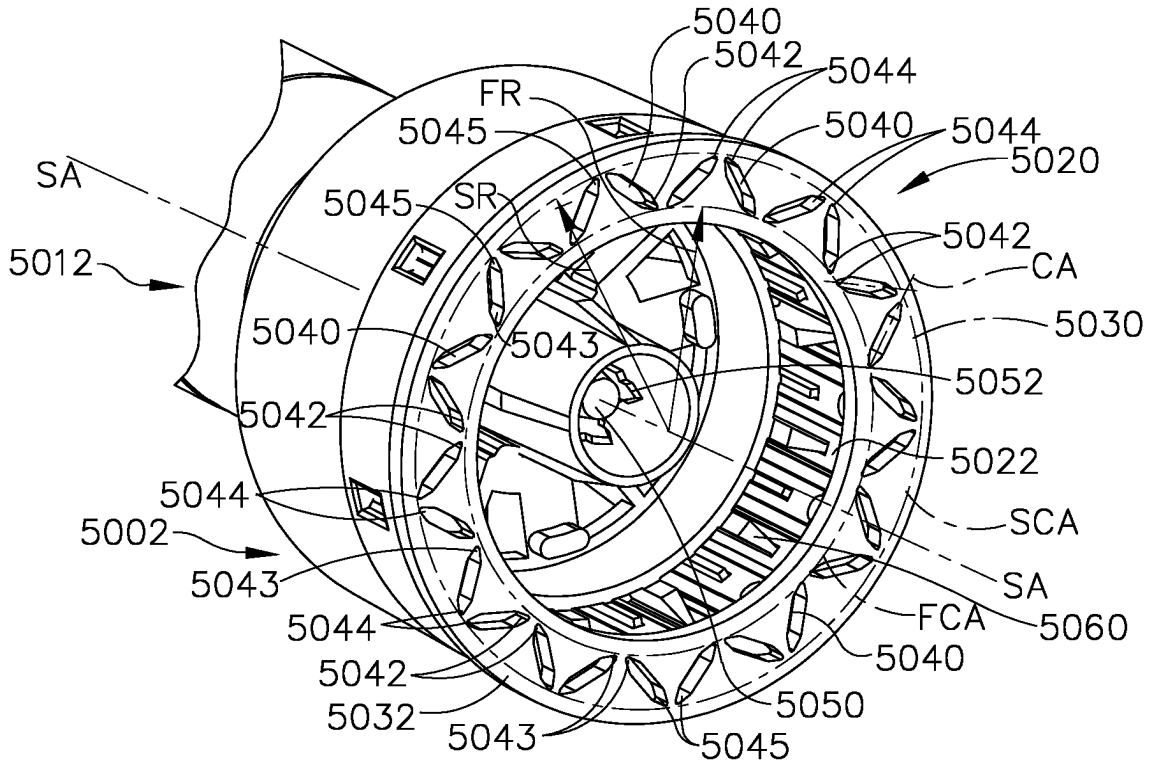

FIG. 29A

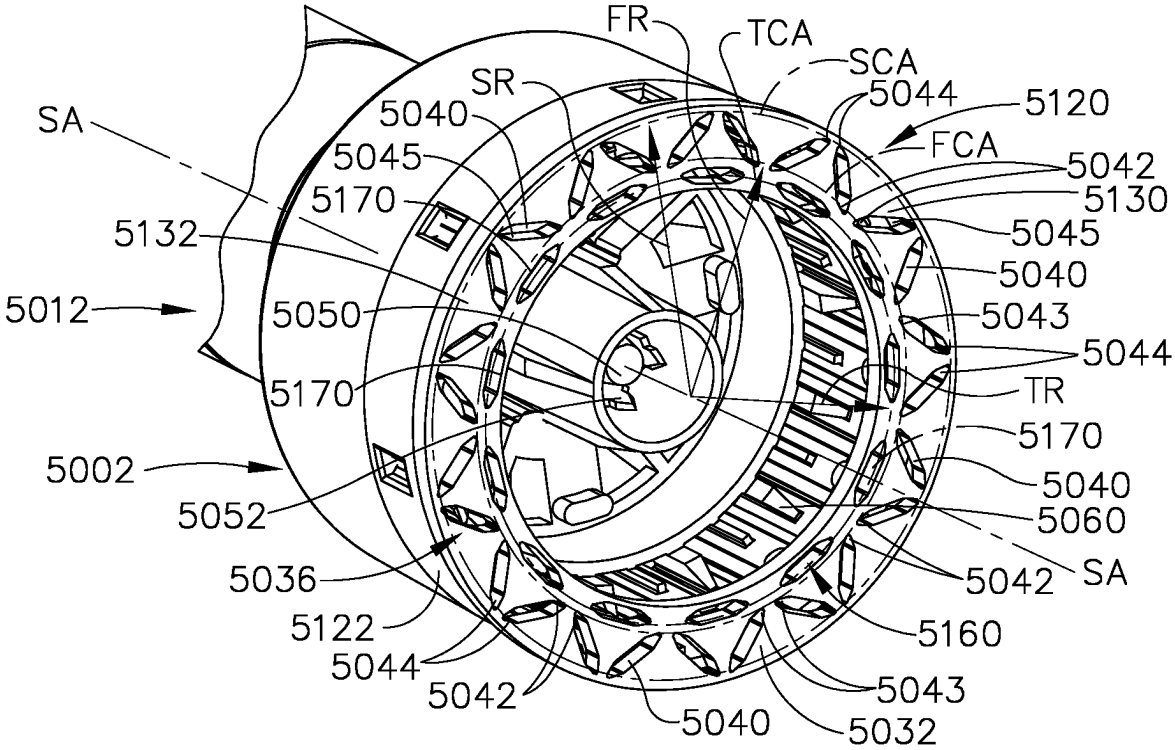

FIG. 30

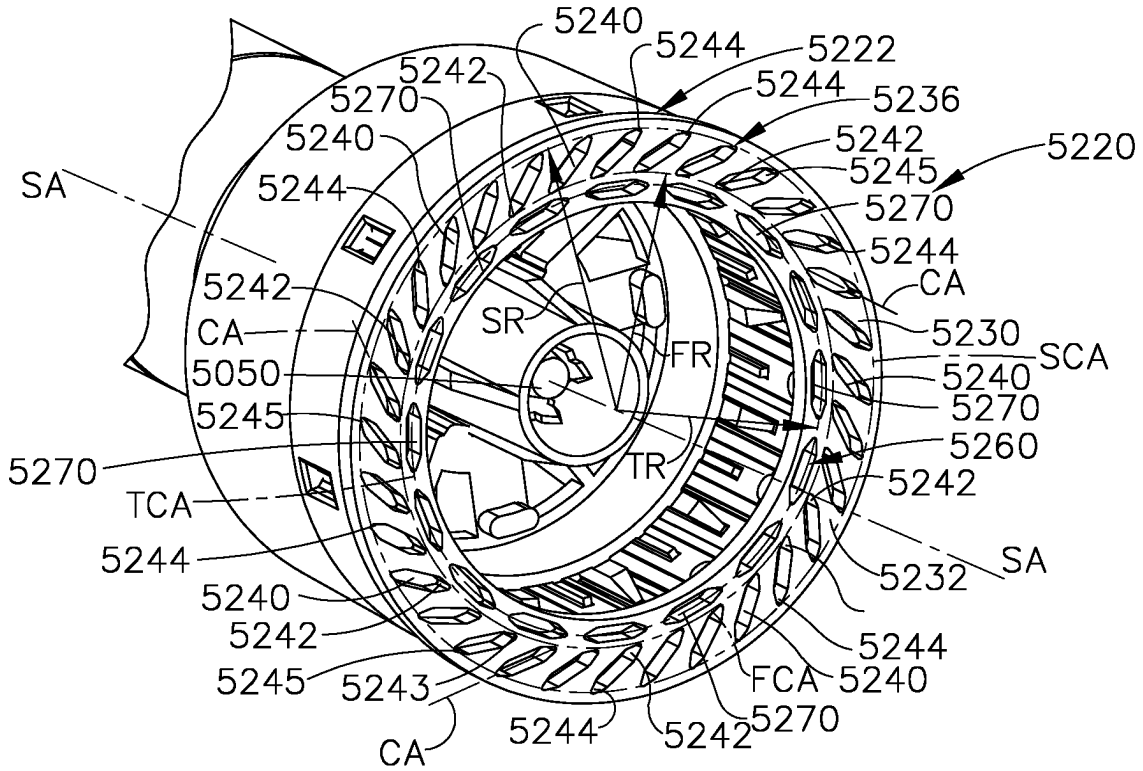
5240
5244
5222
5242
5244
5236
5270
5240
5242
5220
5245
SA
5244
5270
5244
CA
5242
SR
5230
CA
FR
SCA
5050
5240
5245
5270
5260
5270
TR
5242
TCA
SA
5244
5232
5240
5242
5244
5245
5243
FCA
5240
5270
5244
5242
CA

FIG. 31

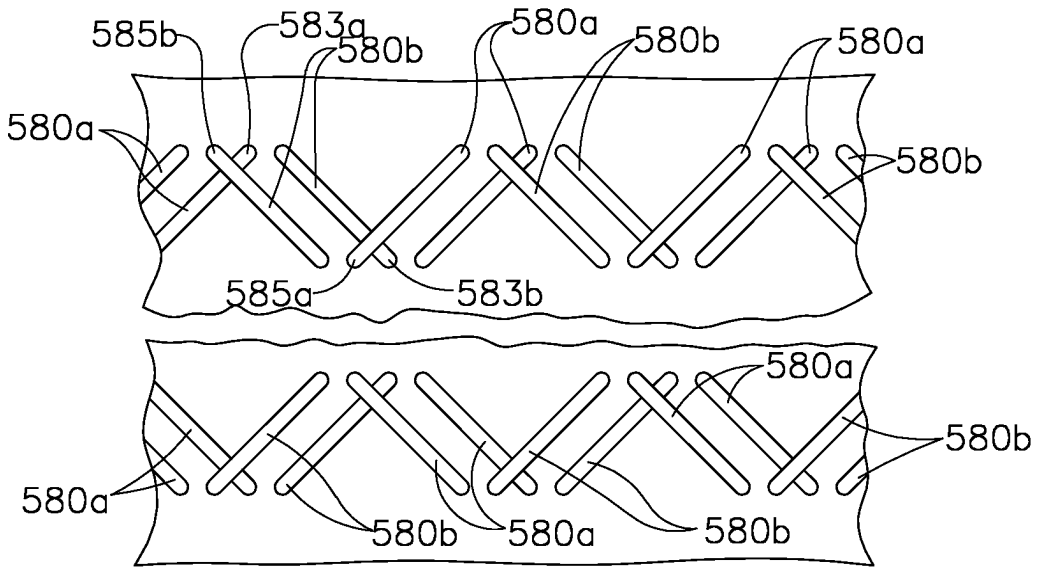
585b
583a
580b
580a
580b
580a
580a
580b
585a
583b
580a
580b
580a
580b
580a
580b

FIG. 32

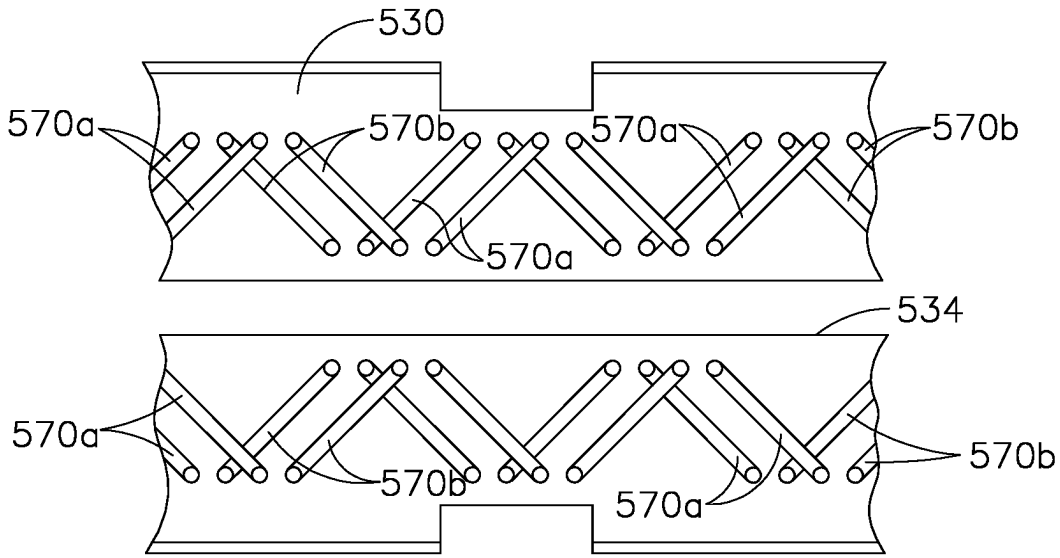
530
570a
570b
570a
570b
570a
534
570a
570b
570b
570a

FIG. 33

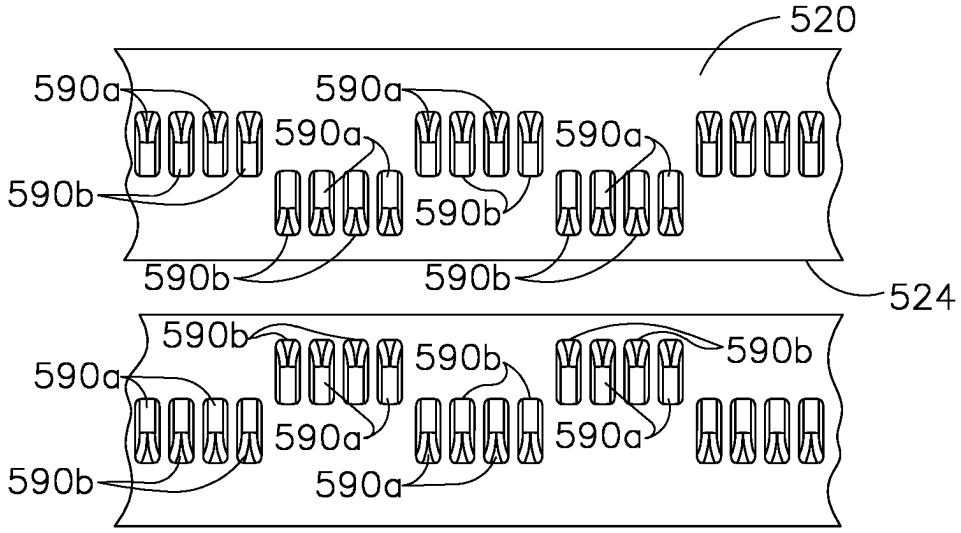
520
590a
590a
590a
590a
590b
590b
590b
590b
524
590b
590b
590b
590a
590a
590a
590b
590a

FIG. 34

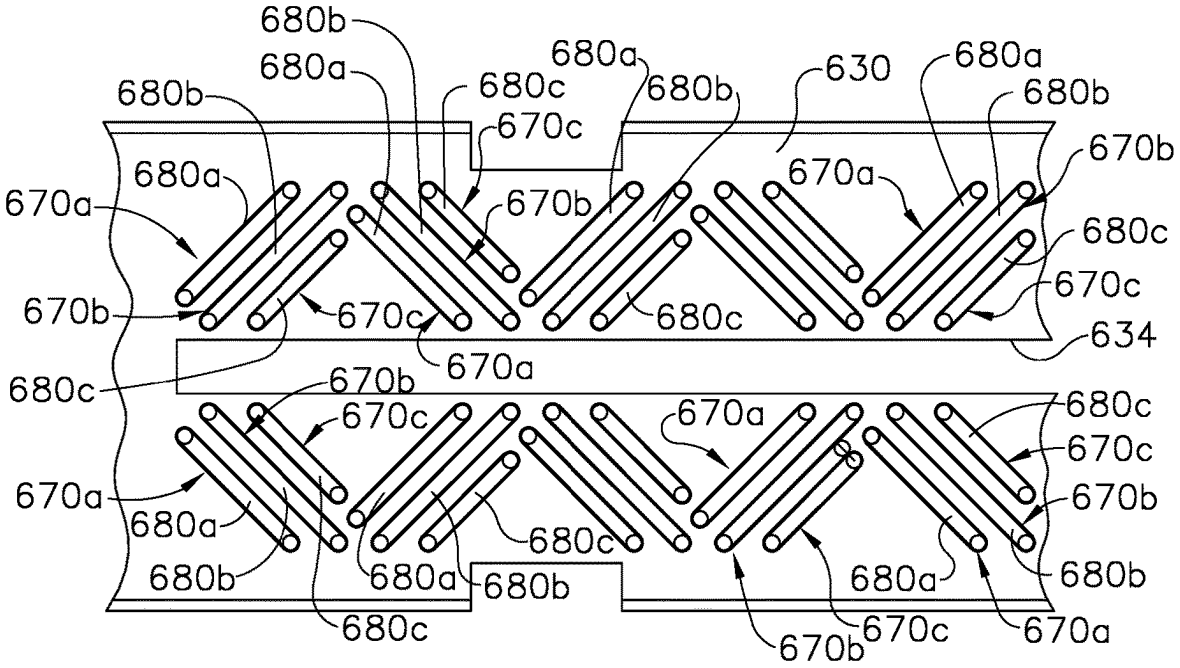
680b
680a
680c
680a
680b
630
680a
680b
680b
670c
670b
680a
670a
670b
670a
680c
670c
670b
670c
680c
634
680c
670b
670a
670c
670a
680c
670c
670a
670b
680a
680c
680b
680a
680b
680a
680b
680c
670b
670c
670a

FIG. 35

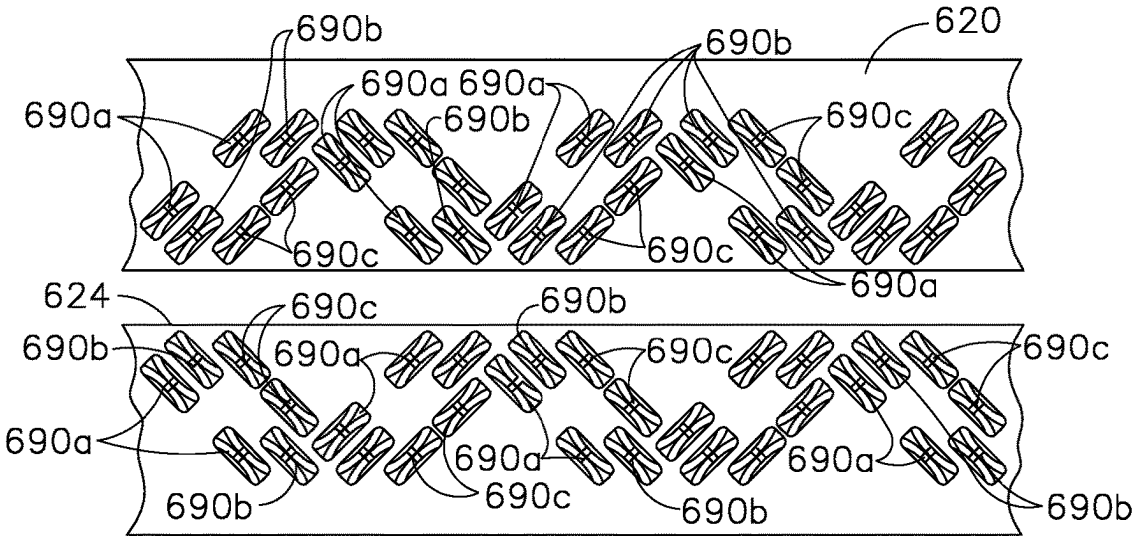
690b
690b
620
690a 690a
690a
690b
690c
690c
690c
690a
624
690c
690b
690b
690a
690c
690c
690a
690a
690a
690b
690c
690b
690b

FIG. 36

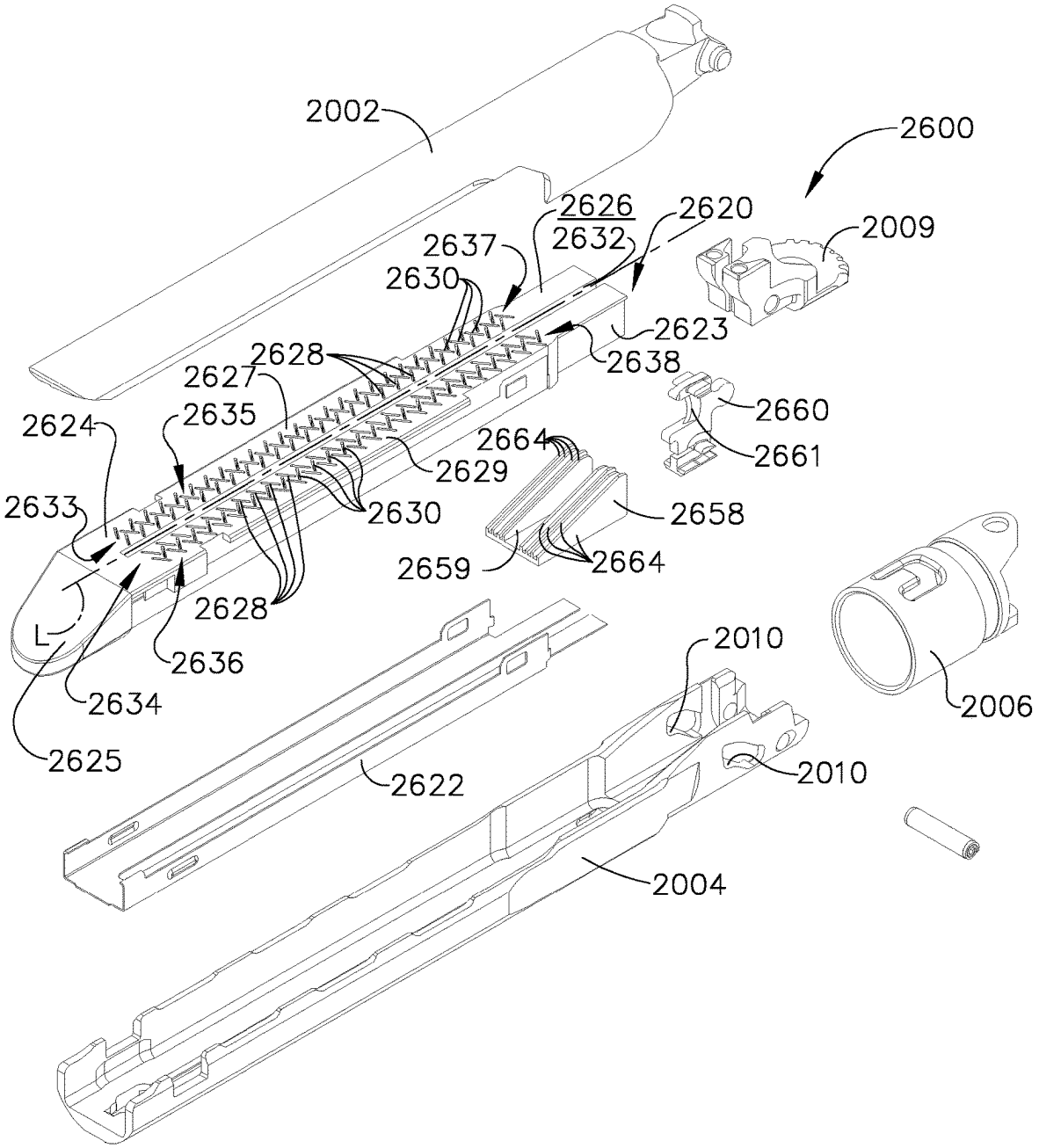
2002
2600
2626
2632
2620
2009
2637
2630
2623
2628
2638
2627
2660
2624
2635
2664
2661
2629
2633
2630
2658
2659
2664
2628
L
2636
2010
2006
2634
2625
2622
2010
2004

FIG. 37

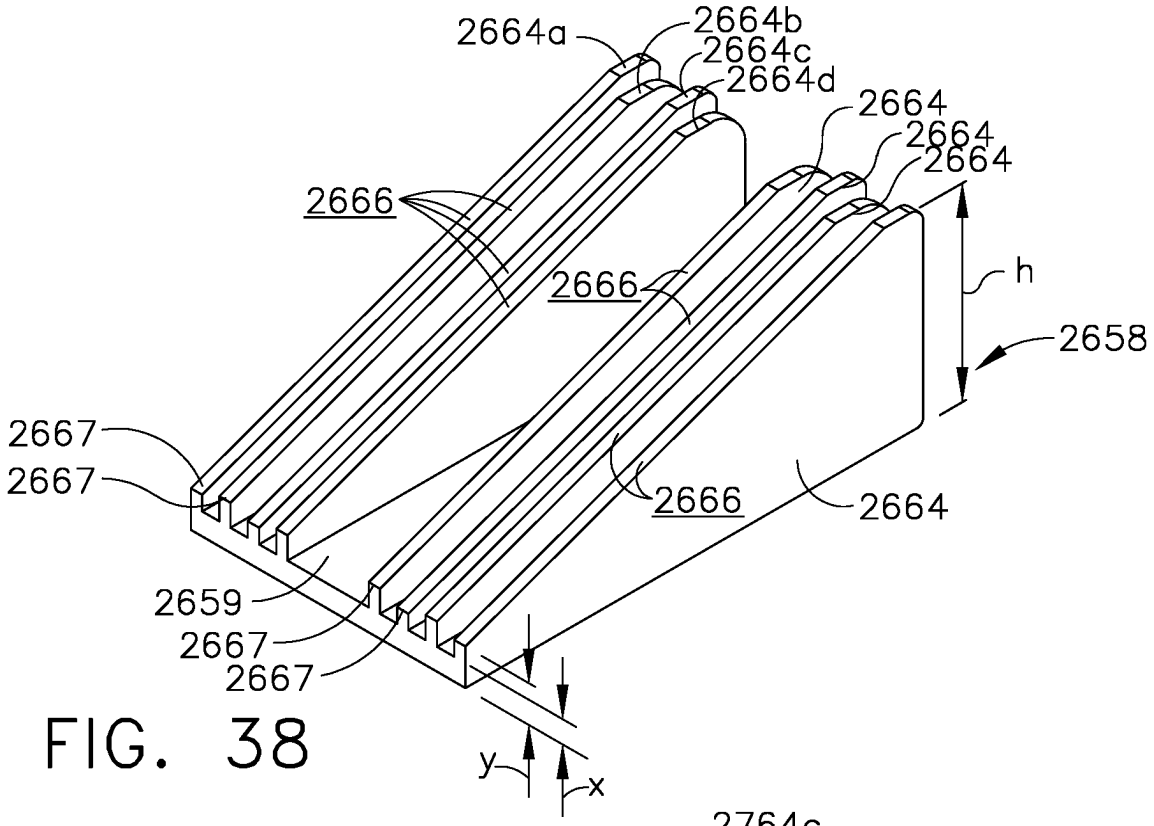
2664a
2664b
2664c
2664d
2664
2664
2664
2666
2666
h
2658
2667
2667
2666
2664
2659
2667
2667
y
x

FIG. 38

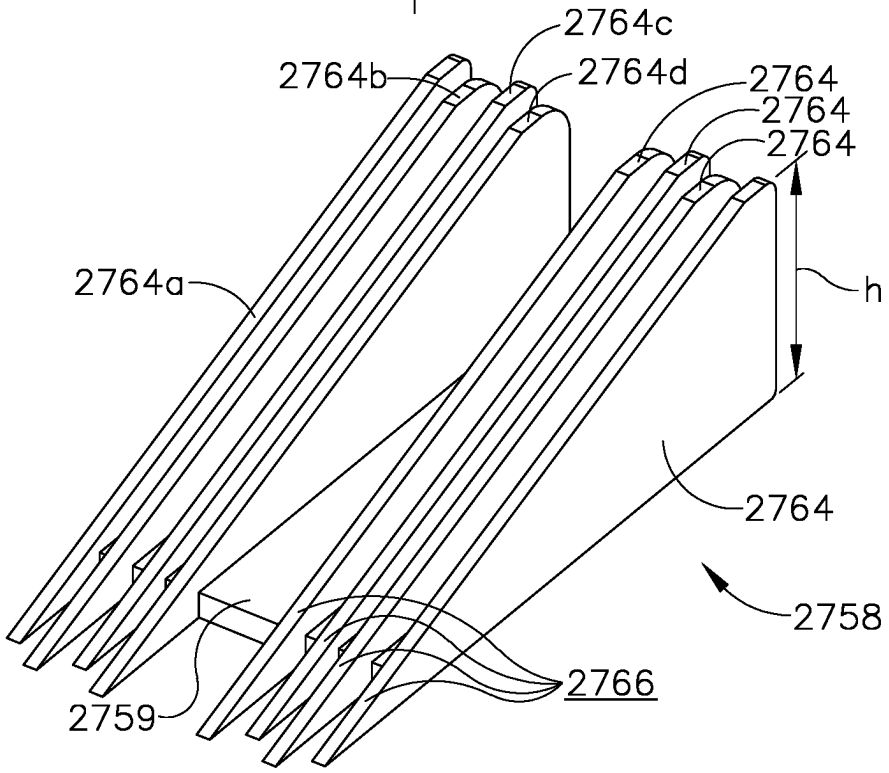
2764c
2764b
2764d
2764
2764
2764
2764a
h
2764
2758
2759
2766

FIG. 39

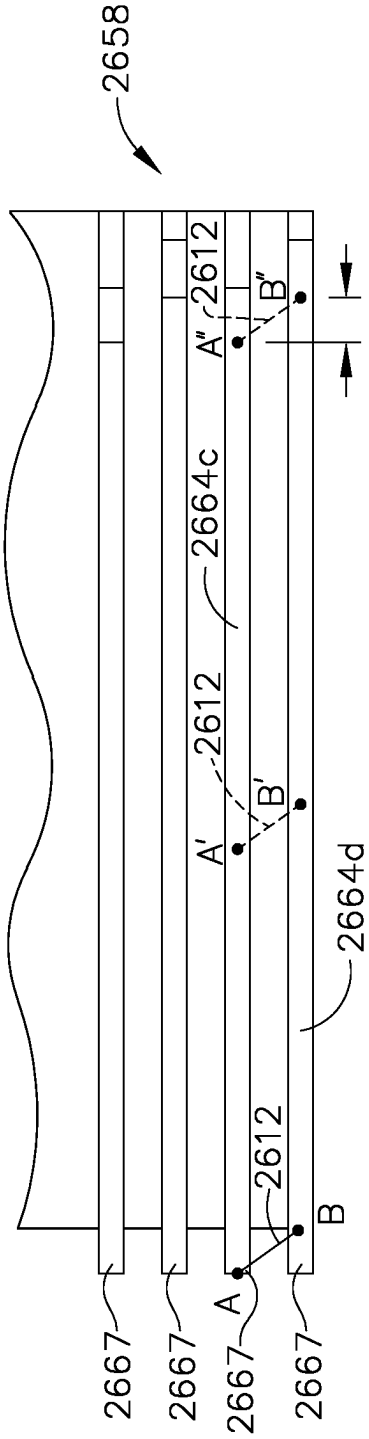

FIG. 38A

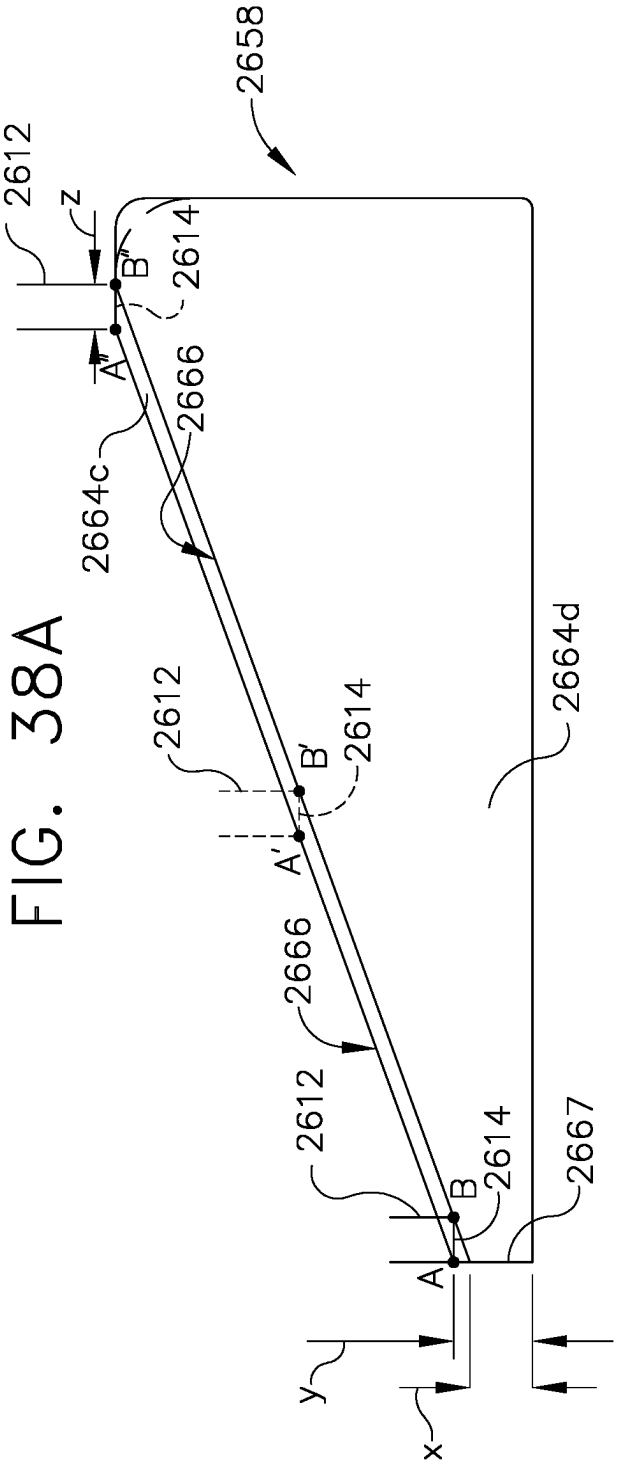

FIG. 38B

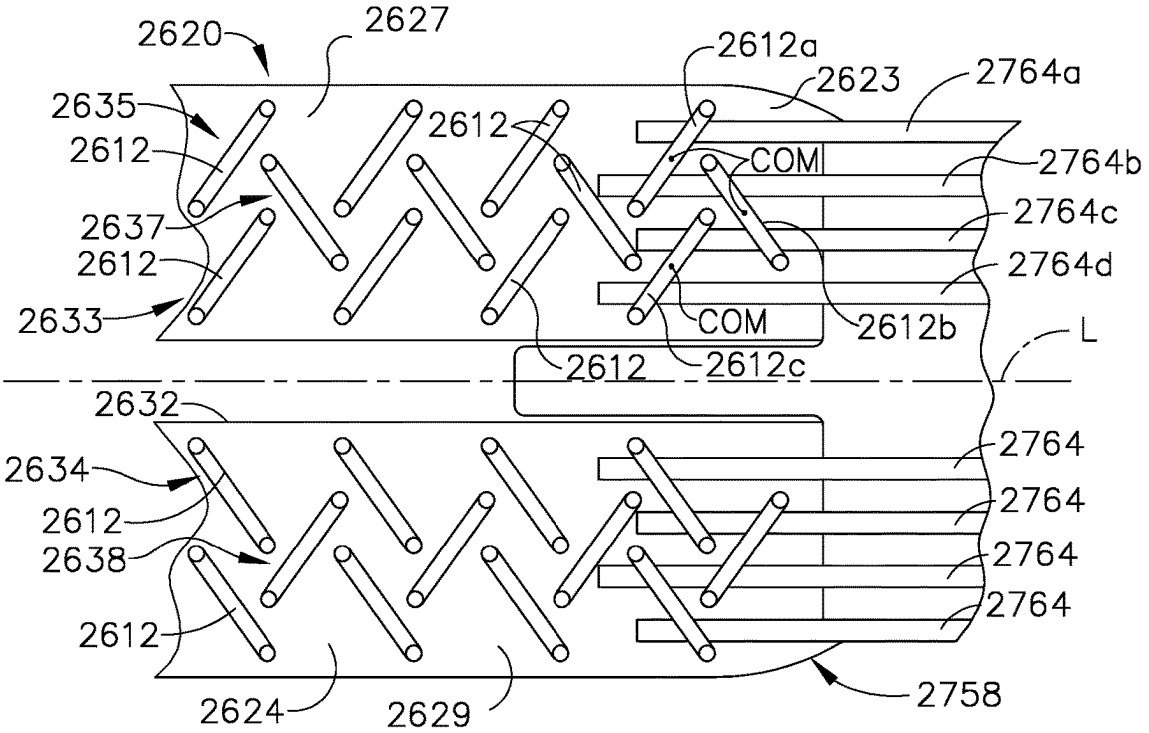

FIG. 39A

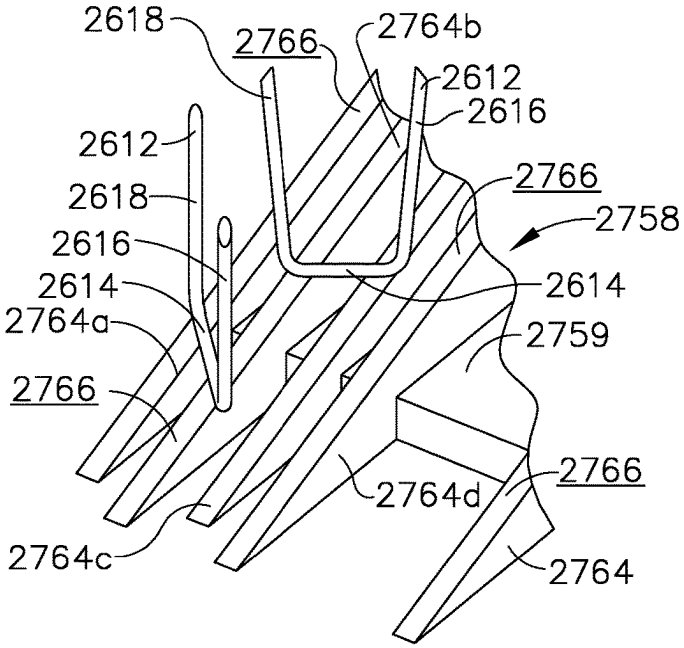

FIG. 39B

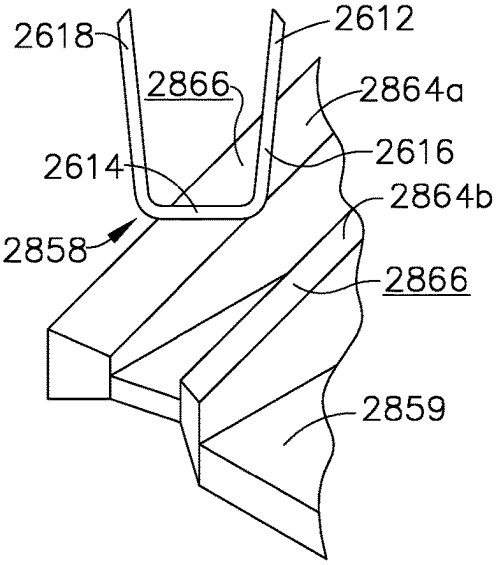

FIG. 40

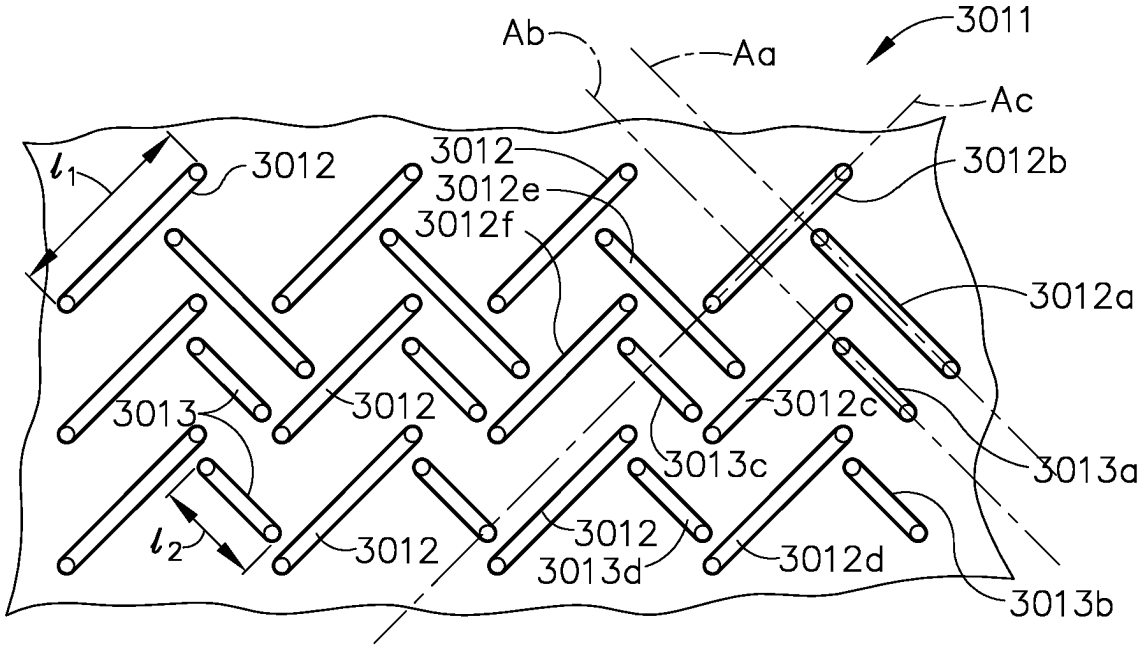
3011
Ab
Aa
Ac
l_1
3012
3012
3012e
3012f
3012b
3012a
3013
3012
3012c
3013c
3013a
l_2
3012
3012
3013d
3012d
3013b

FIG. 41

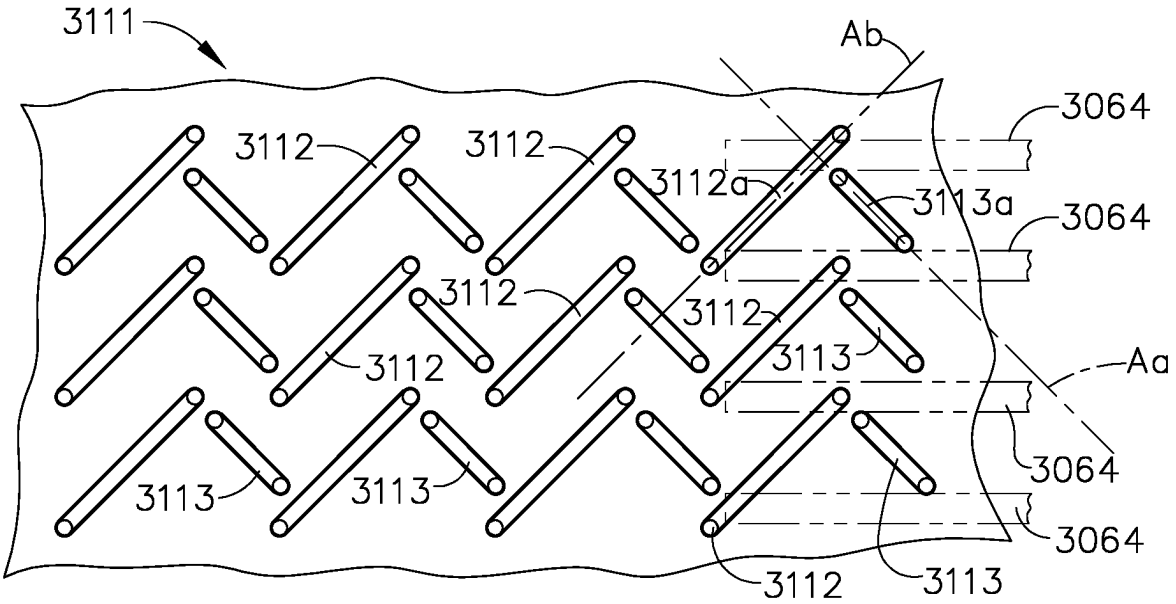
3111
Ab
3064
3112
3112
3112a
3113a
3064
3112
3112
3113
Aa
3112
3064
3113
3113
3064
3112
3113

FIG. 42

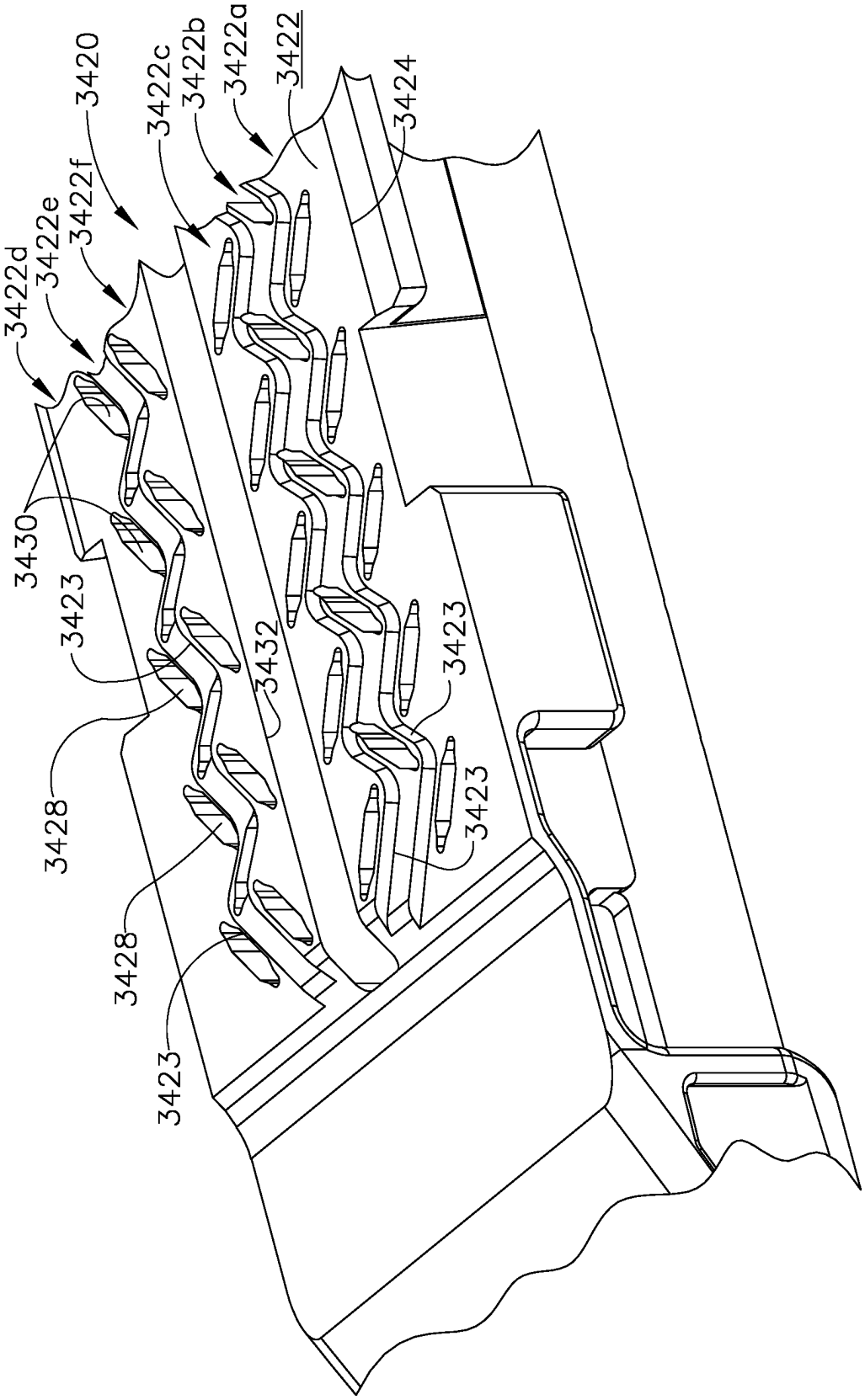
3420
3422c
3422b
3422a
3422
3424
3422f
3422e
3422d
3430
3423
3432
3423
3428
3423
3428
3423

FIG. 43

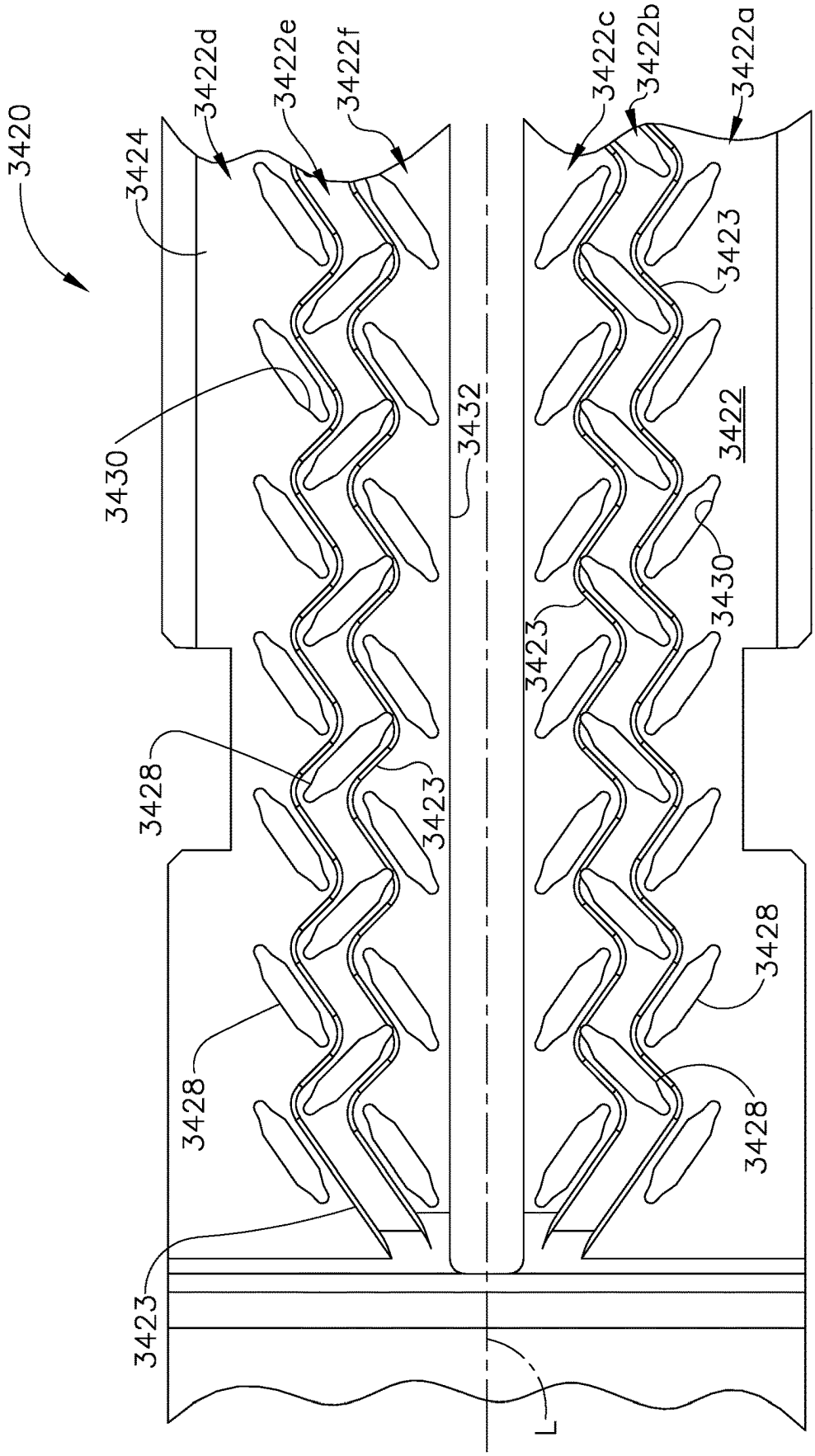
3420
3424
3422d
3422e
3422f
3422c
3422b
3422a
3423
3430
3432
3422
3430
3423
3428
3423
3428
3428
3428
3423
L

FIG. 44

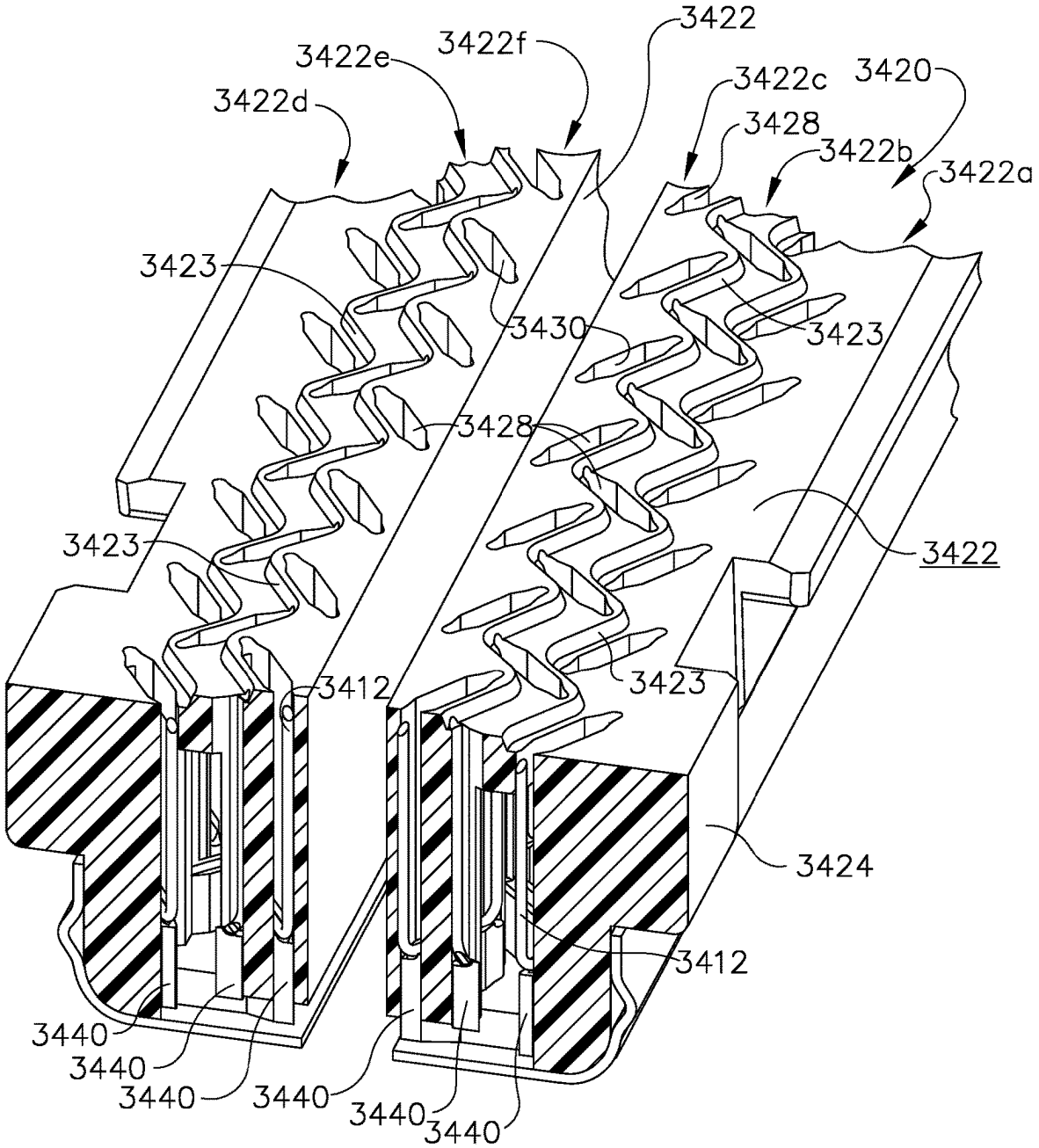
3422
3422f
3422e
3422d
3422c
3420
3428
3422b
3422a
3423
3430
3423
3428
3423
3422
3412
3423
3424
3412
3440
3440
3440
3440
3440
3440

FIG. 45

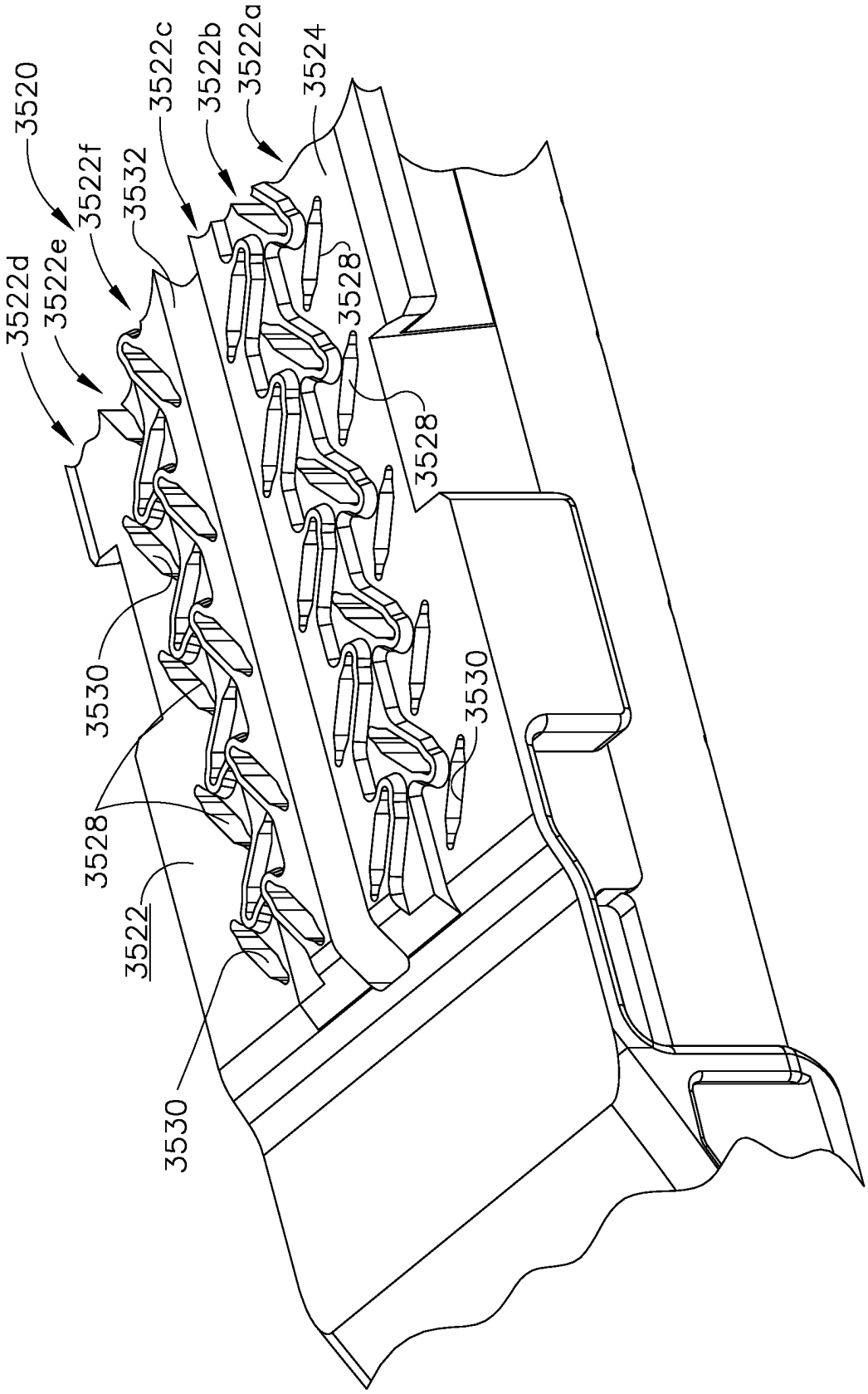
3520
3522d
3522e
3522f
3532
3522c
3522b
3522a
3524
3528
3528
3530
3530
3528
3522
3530

FIG. 46

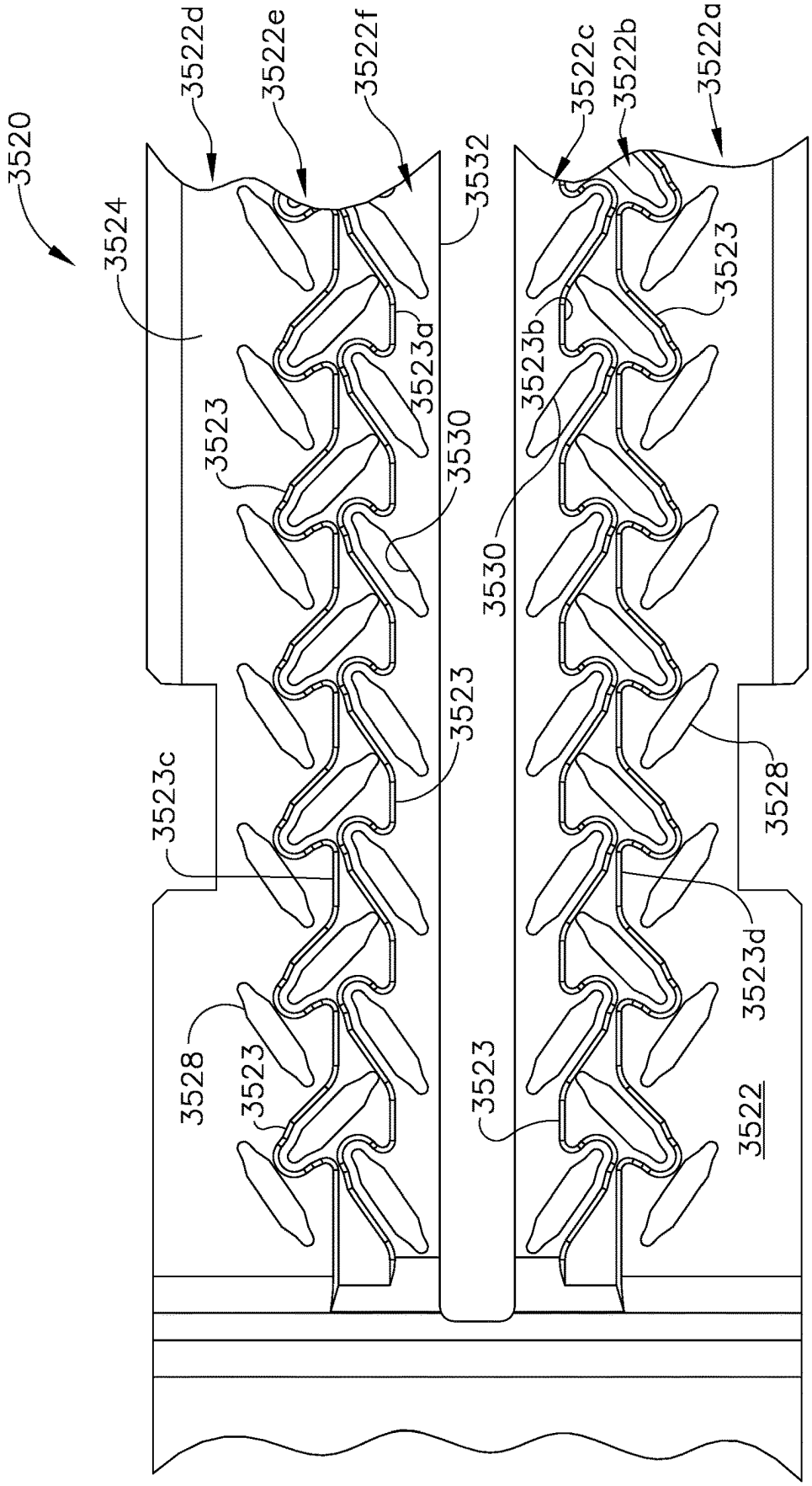
3520
3524
3522d
3522e
3522f
3532
3522c
3522b
3522a
3523
3523a
3523b
3530
3523c
3528
3523d
3522

FIG. 47

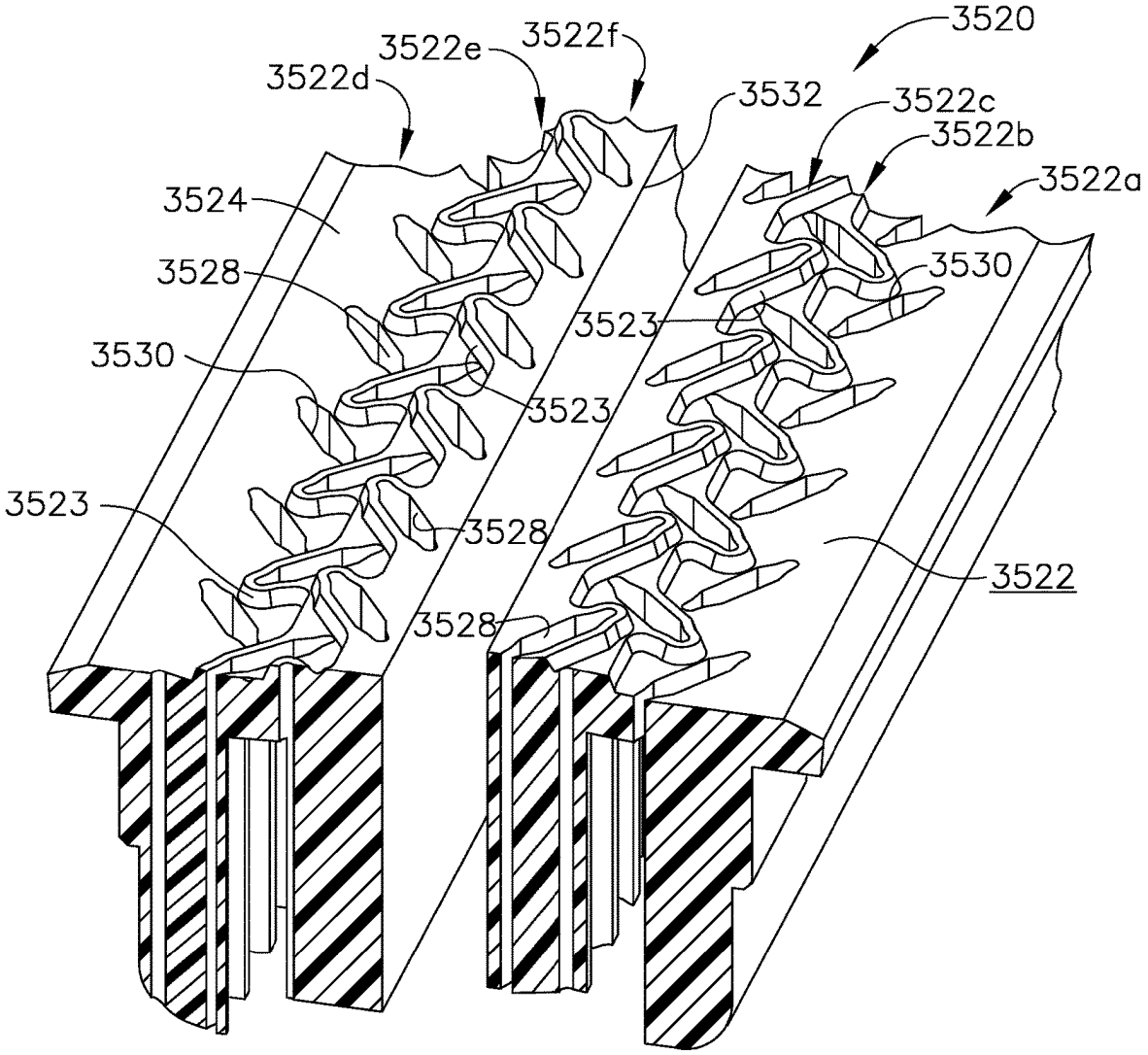
3520
3522e
3522f
3522d
3532
3522c
3522b
3522a
3524
3528
3530
3523
3530
3523
3523
3528
3522
3528

FIG. 48

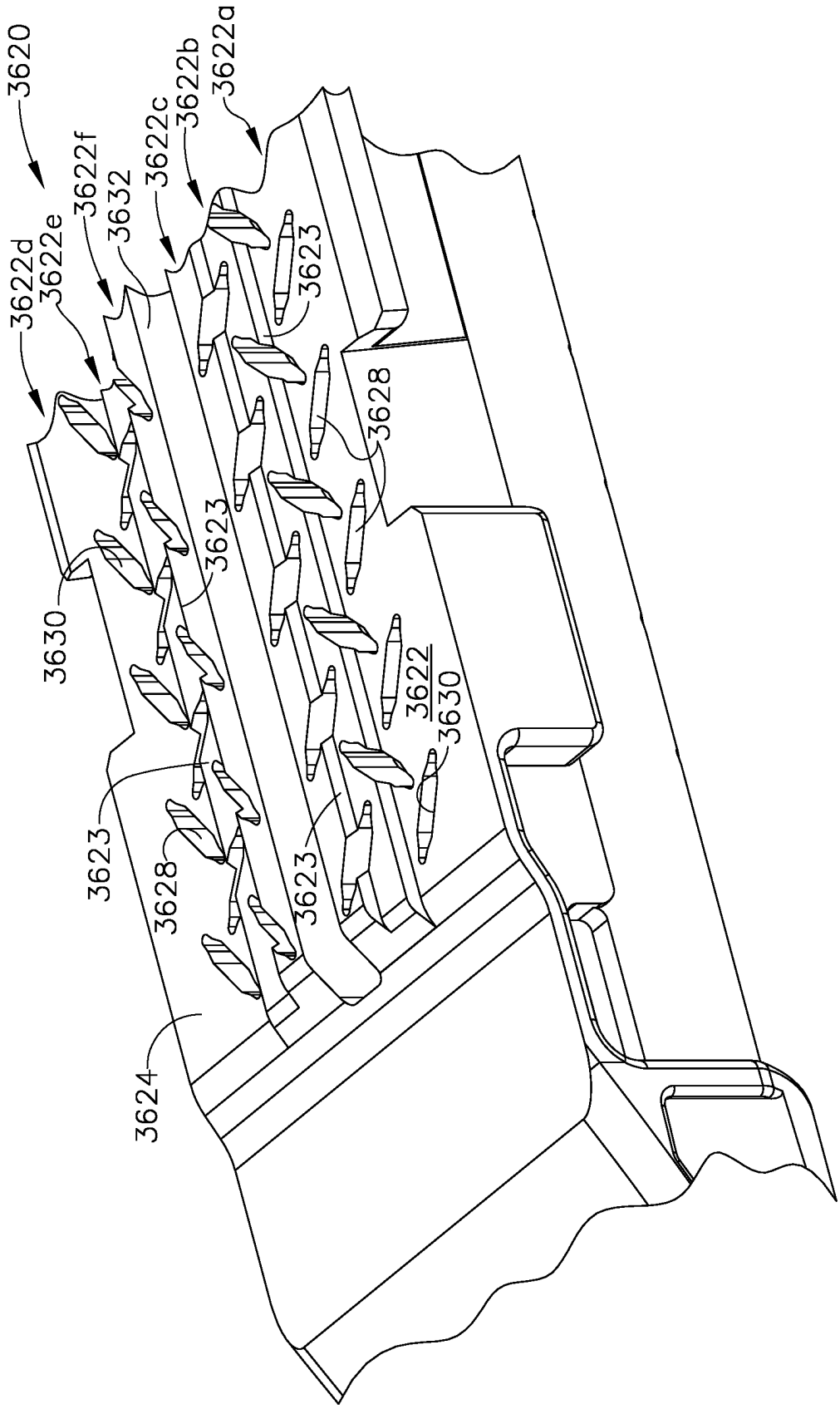
3620
3622d
3622e
3622f
3632
3622c
3622b
3622a
3623
3628
3623
3630
3622
3630
3623
3628
3623
3624

FIG. 49

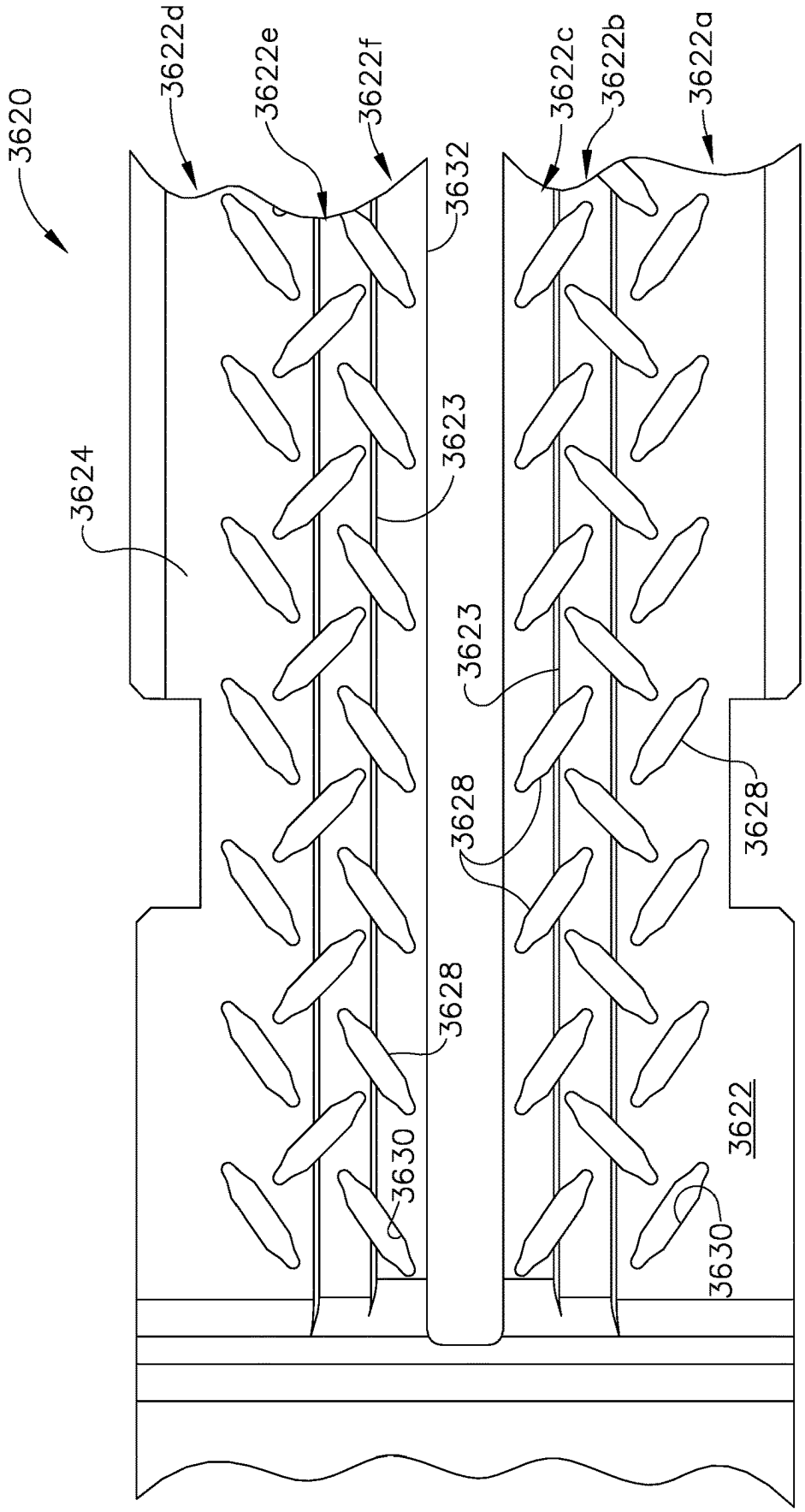
3620
3622d
3622e
3622f
3622c
3622b
3622a
3632
3624
3623
3623
3628
3628
3628
3630
3630
3622

FIG. 50

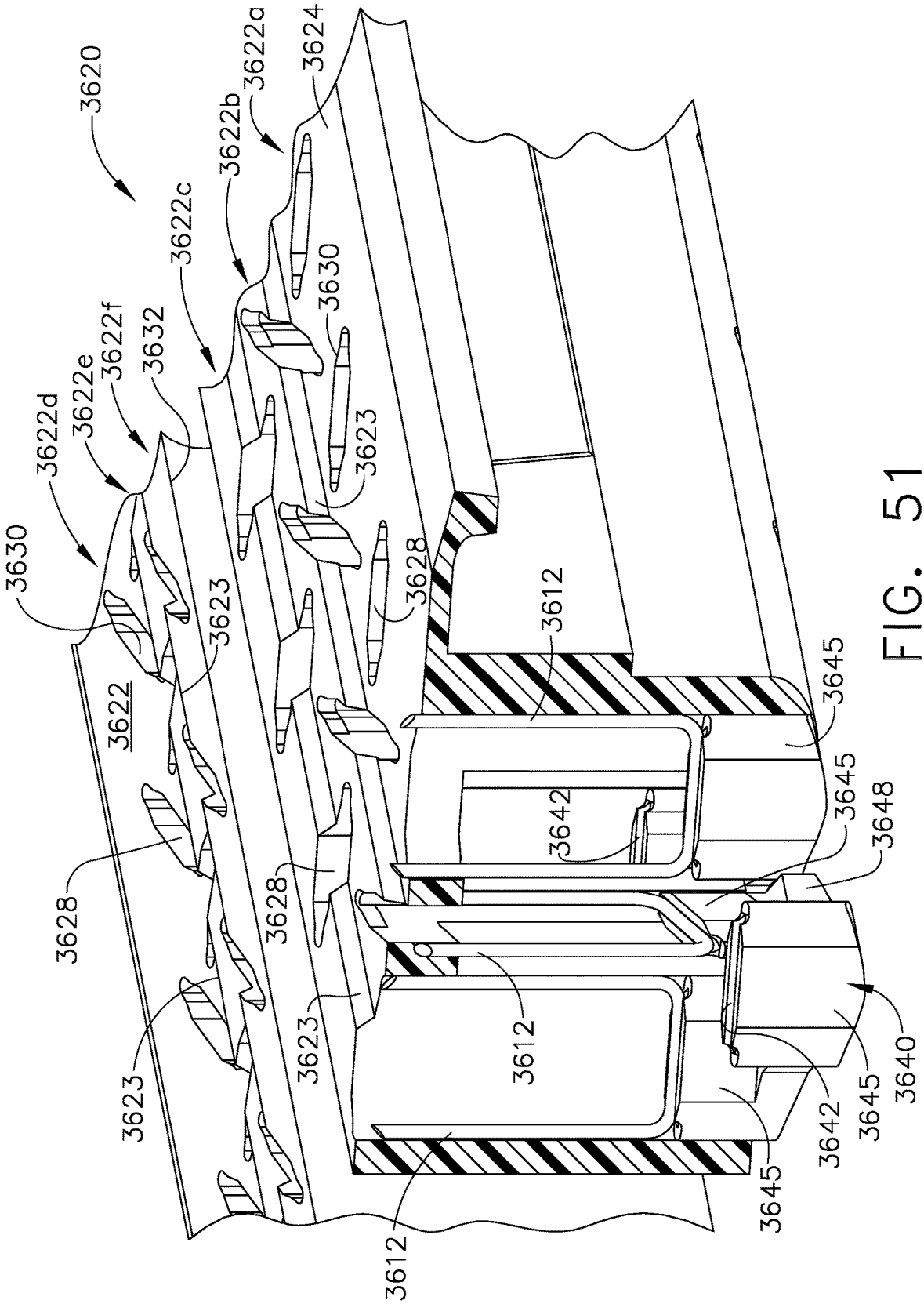
3620
3622a
3624
3622b
3622c
3630
3622f
3632
3622e
3622d
3630
3623
3628
3612
3645
3622
3623
3642
3645
3648
3628
3628
3623
3612
3640
3623
3645
3642
3645
3612

FIG. 51

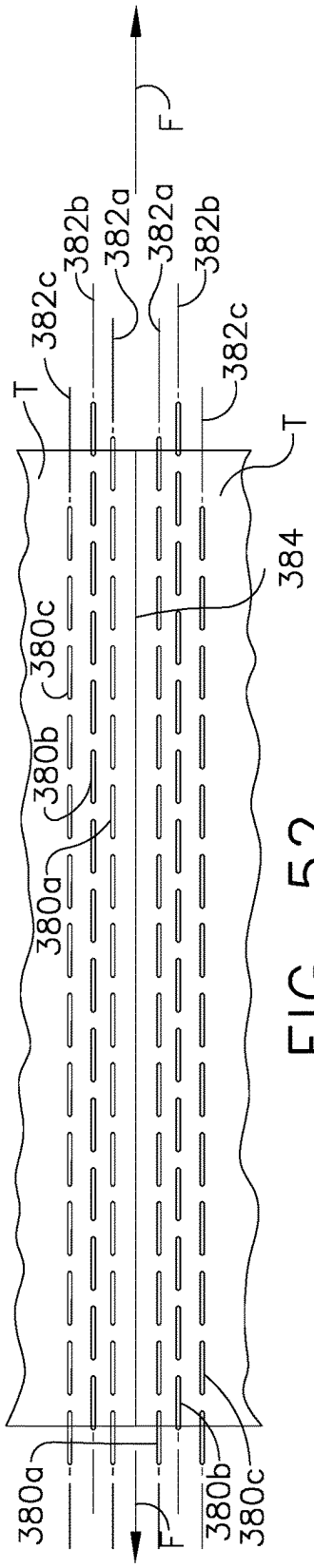

FIG. 52

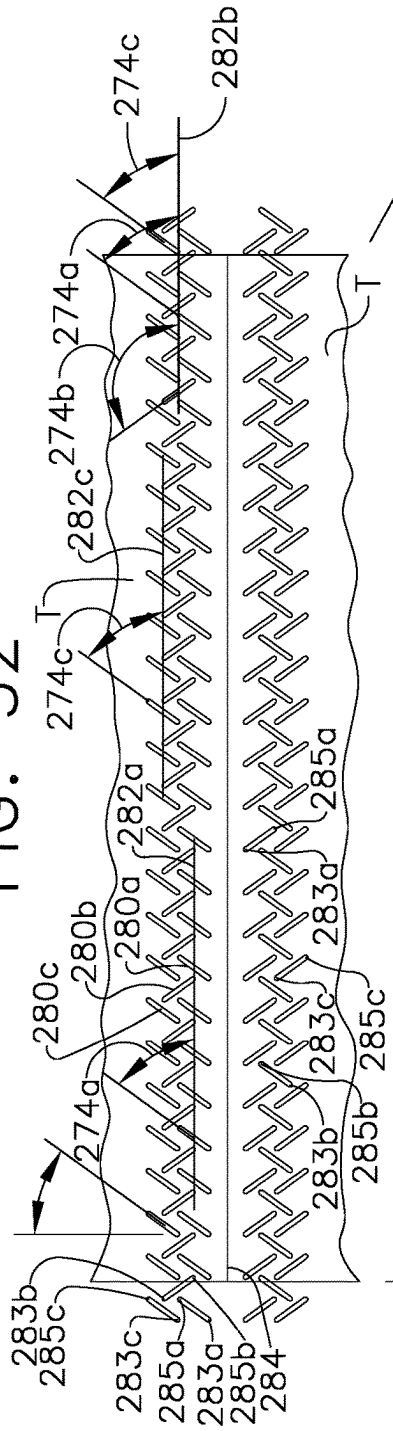

FIG. 52A

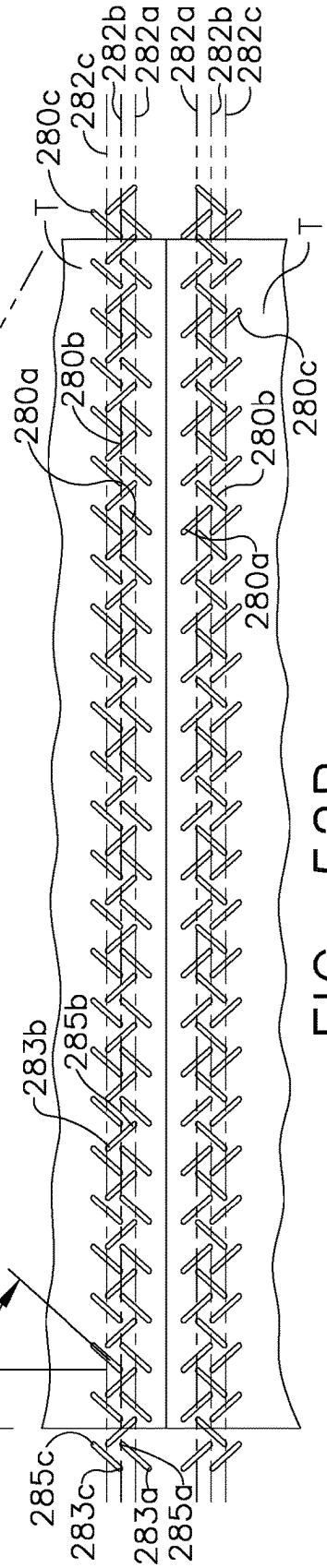

FIG. 52B

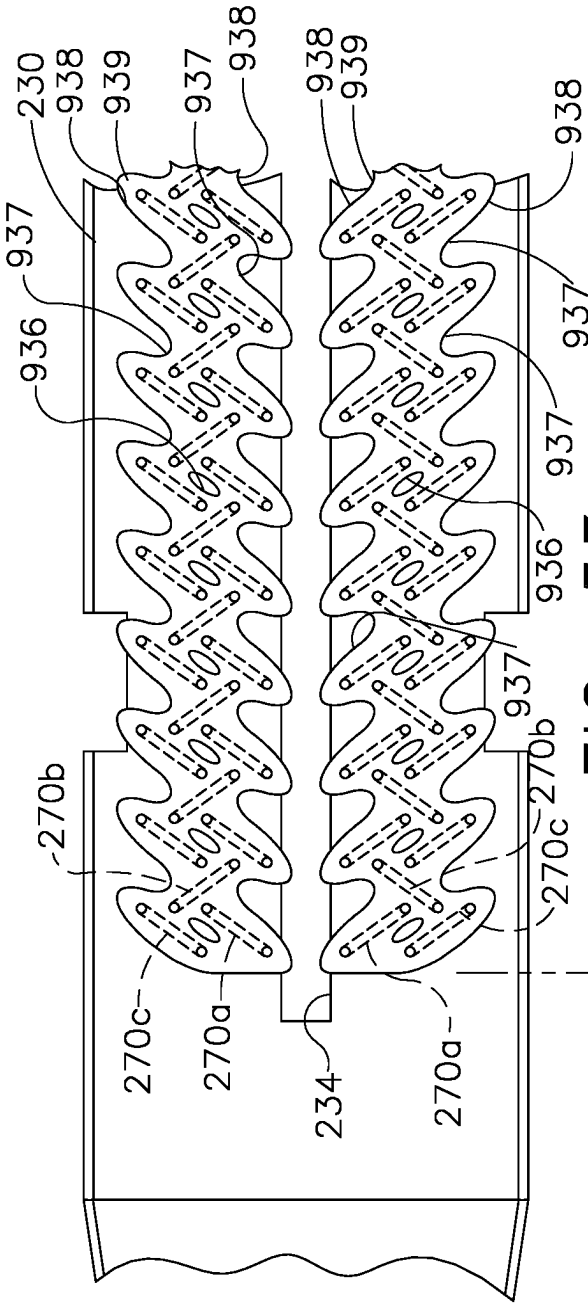
230
938
939
937
938
938
939
938
937
936
937
937
936
937
270b
270b
270c
270c
270a
234
270a

FIG. 53

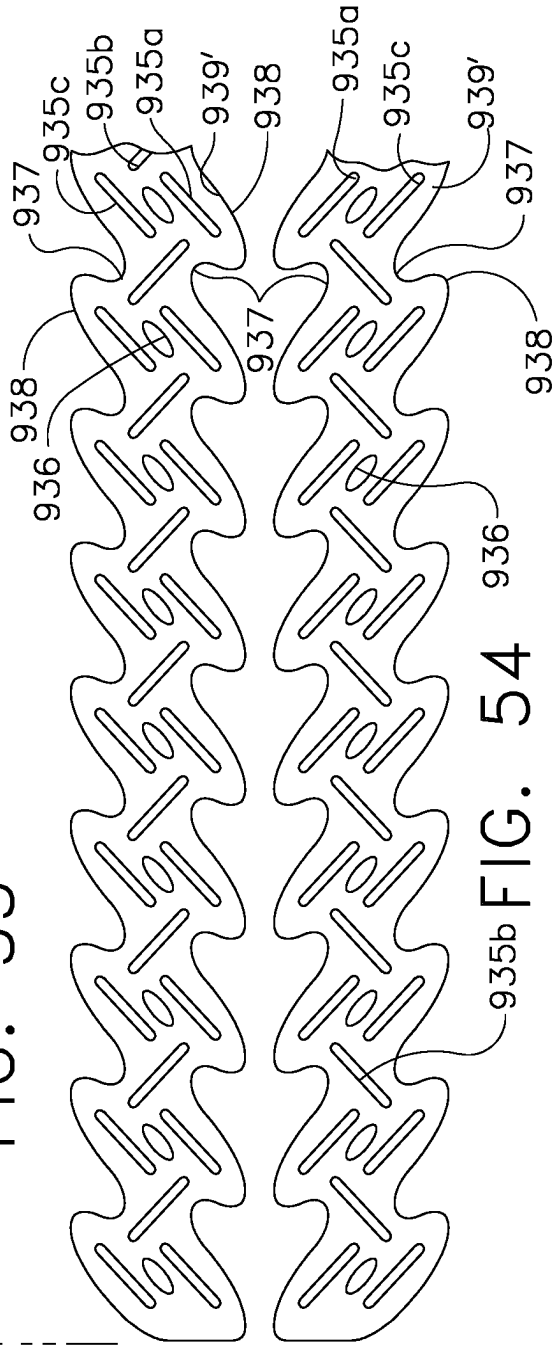
935c
935b
935a
939'
938
935a
935c
939'
937
937
938
937
938
936
936
935b

FIG. 54

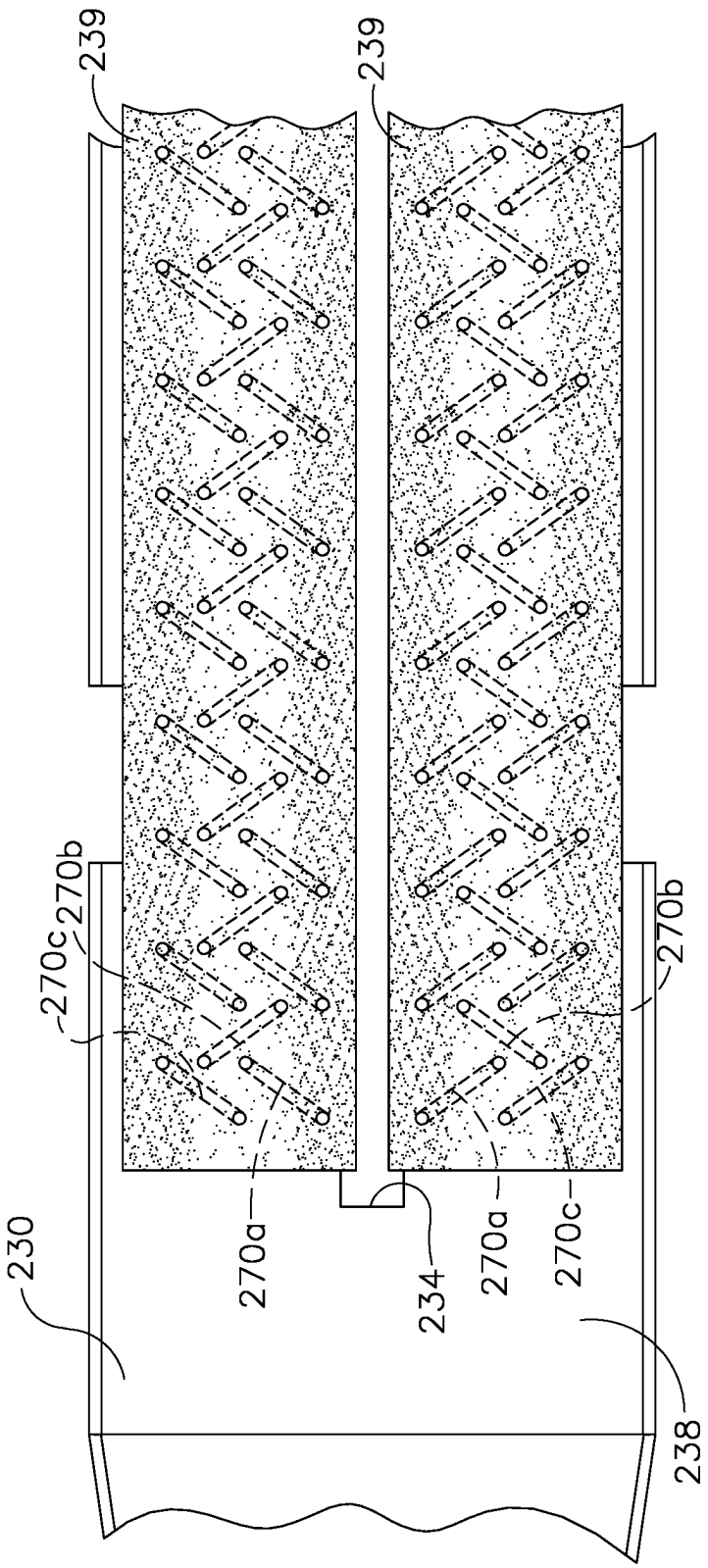

FIG. 55

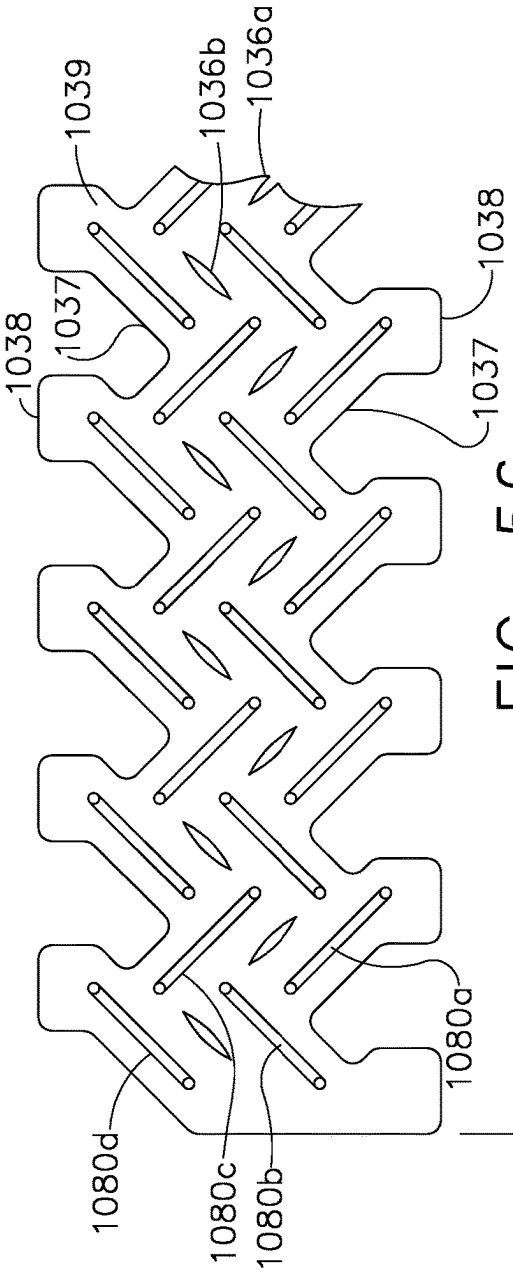
1039
1036b
1036a
1038
1037
1038
1037
1080a
1080d
1080c
1080b

FIG. 56

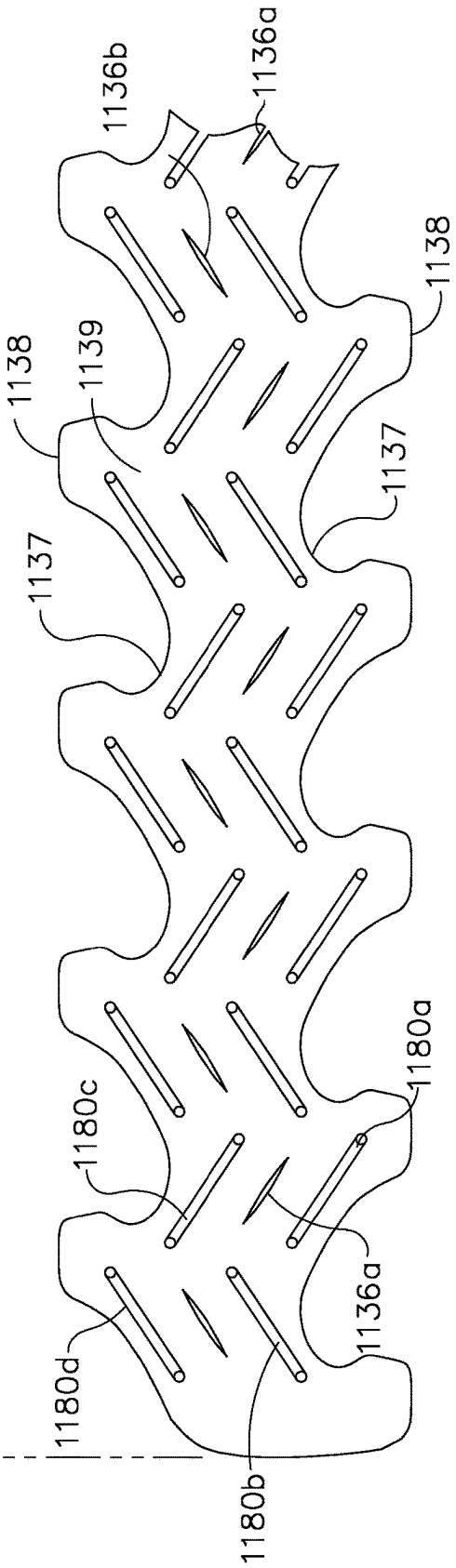
1136b
1136a
1138
1138
1139
1137
1137
1180a
1180c
1136a
1180d
1180b

FIG. 57

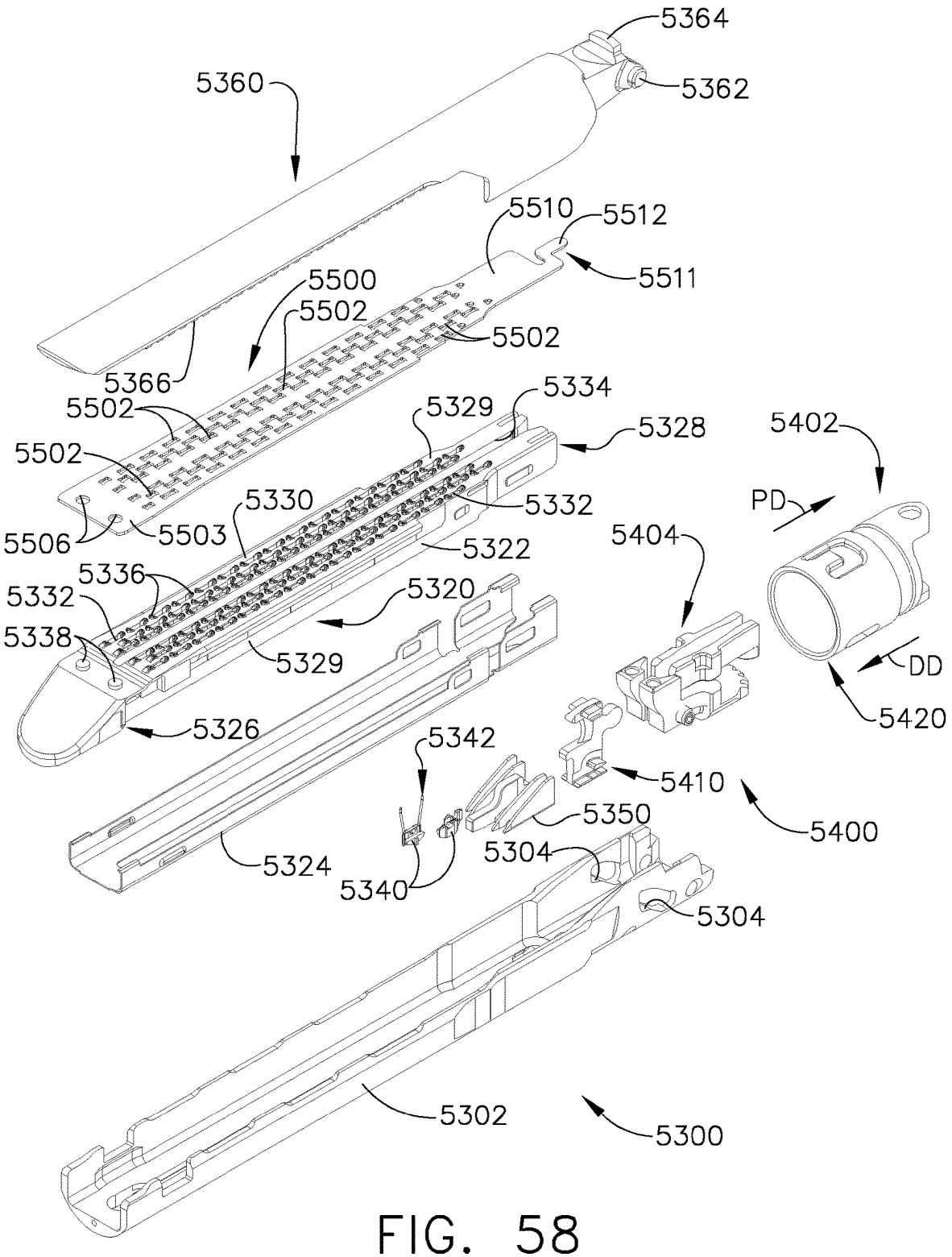
5364
5362
5360
5510
5512
5511
5500
5502
5502
5366
5334
5329
5328
5402
5502
5502
5330
5332
PD
5506
5503
5322
5404
5336
5332
5320
5338
5329
DD
5420
5326
5342
5410
5350
5400
5324
5304
5340
5304
5302
5300

FIG. 58

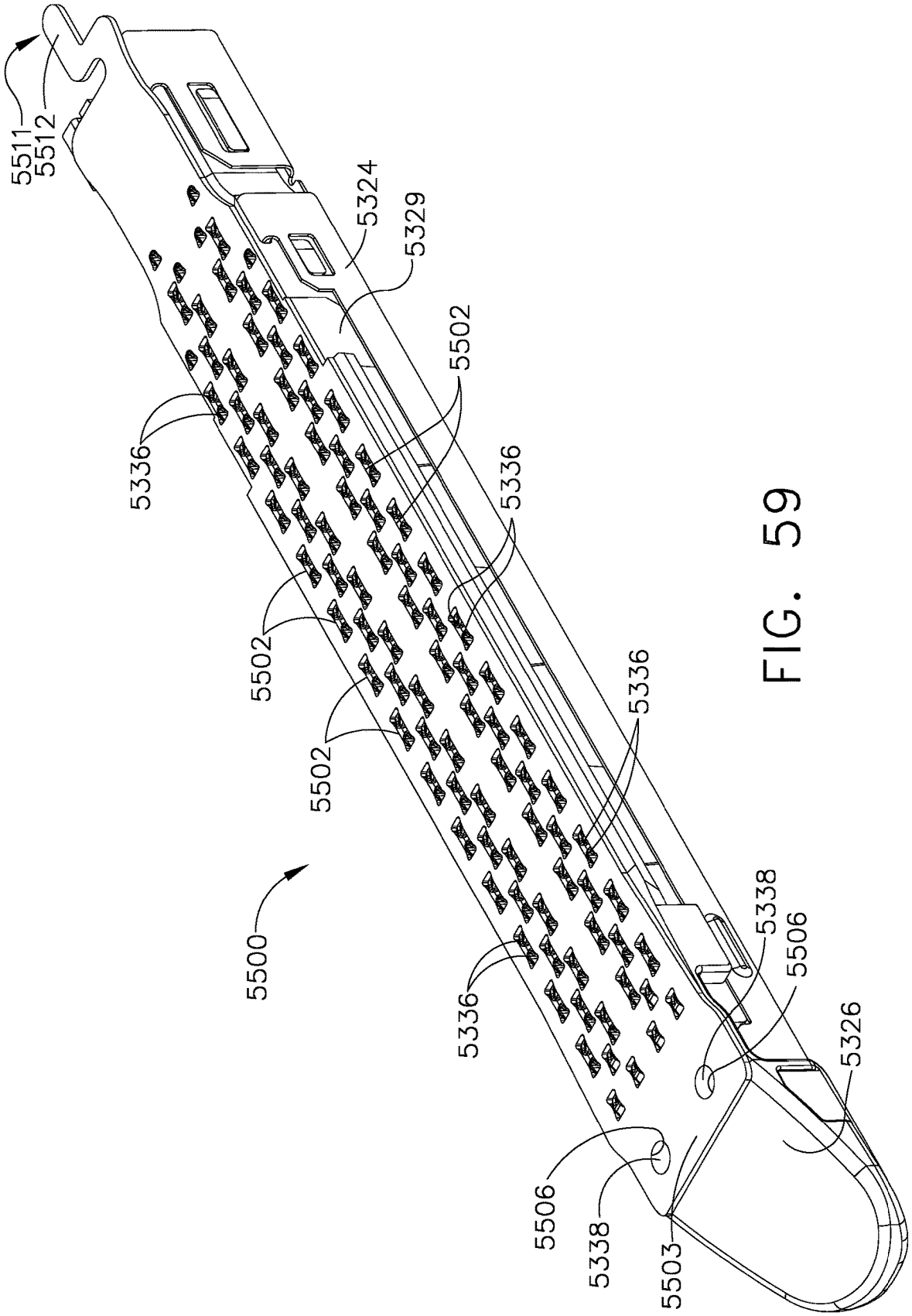
5511
5512
5324
5329
5502
5336
5336
5502
5502
5336
5500
5336
5338
5506
5326
5506
5338
5503

FIG. 59

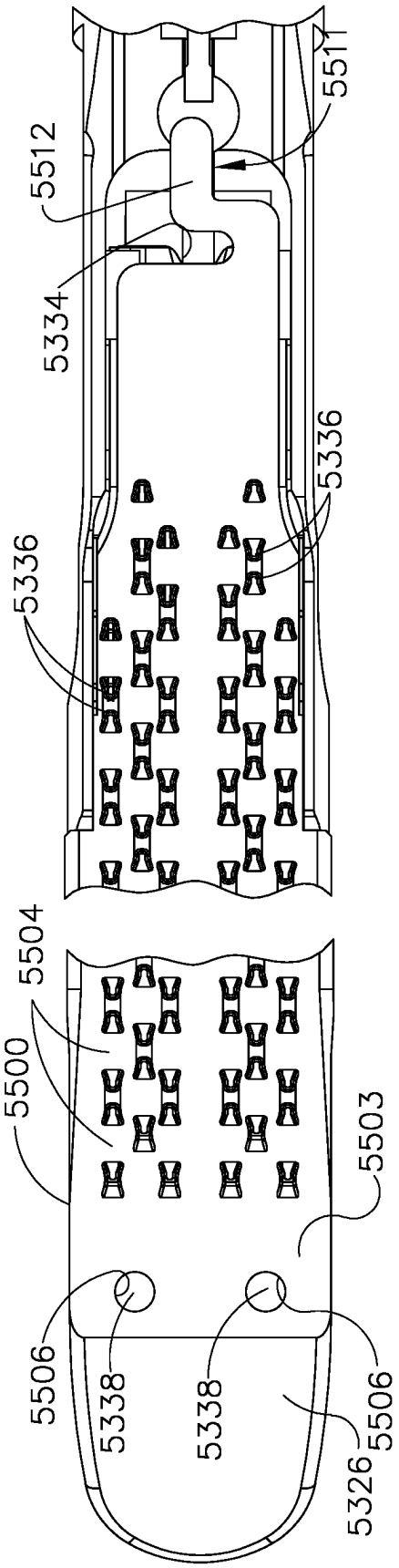

FIG. 60

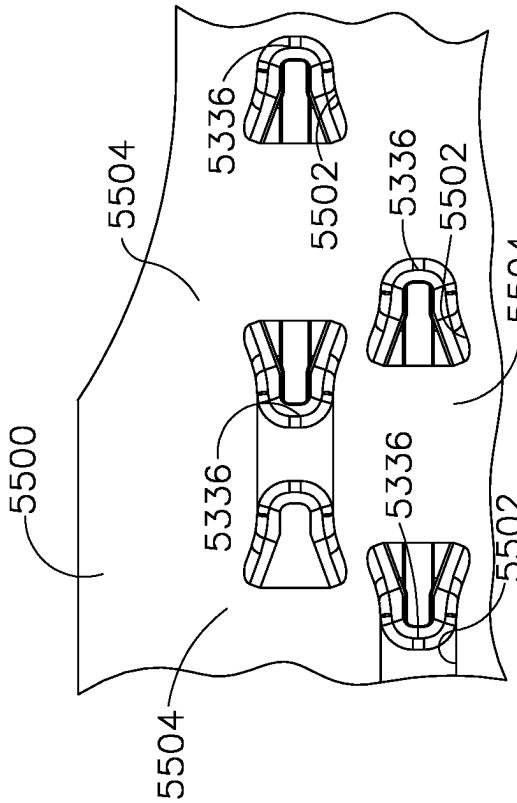

FIG. 62

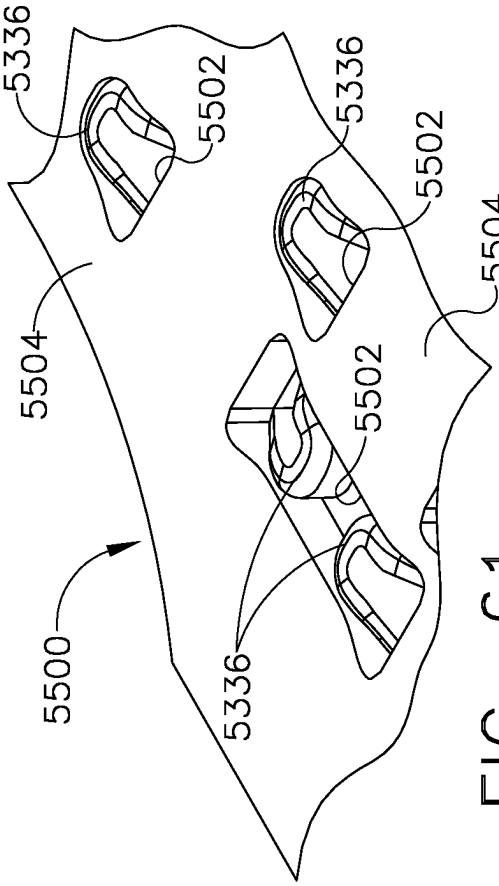

FIG. 61

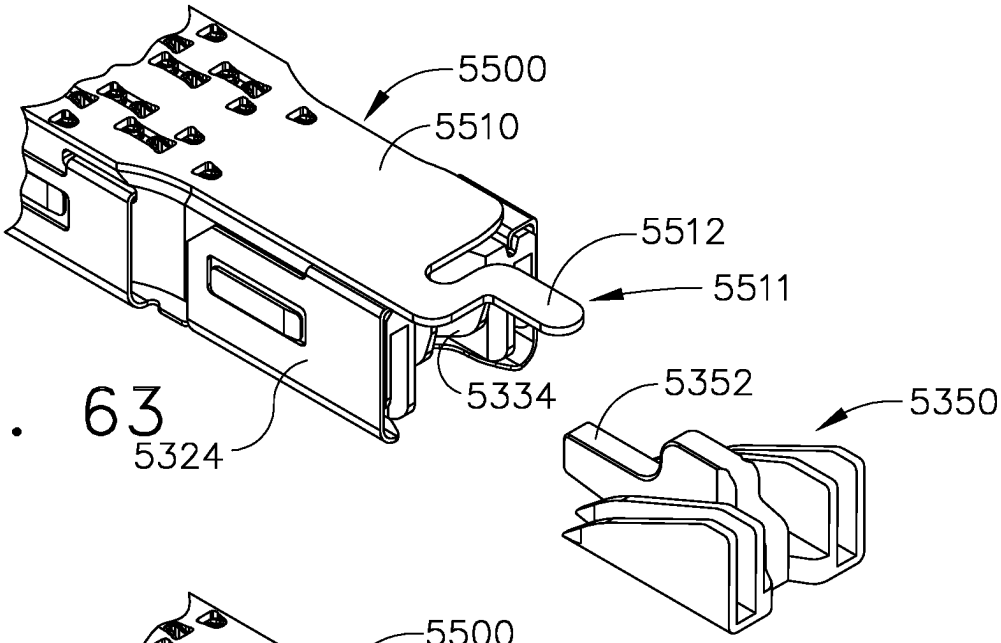

FIG. 63

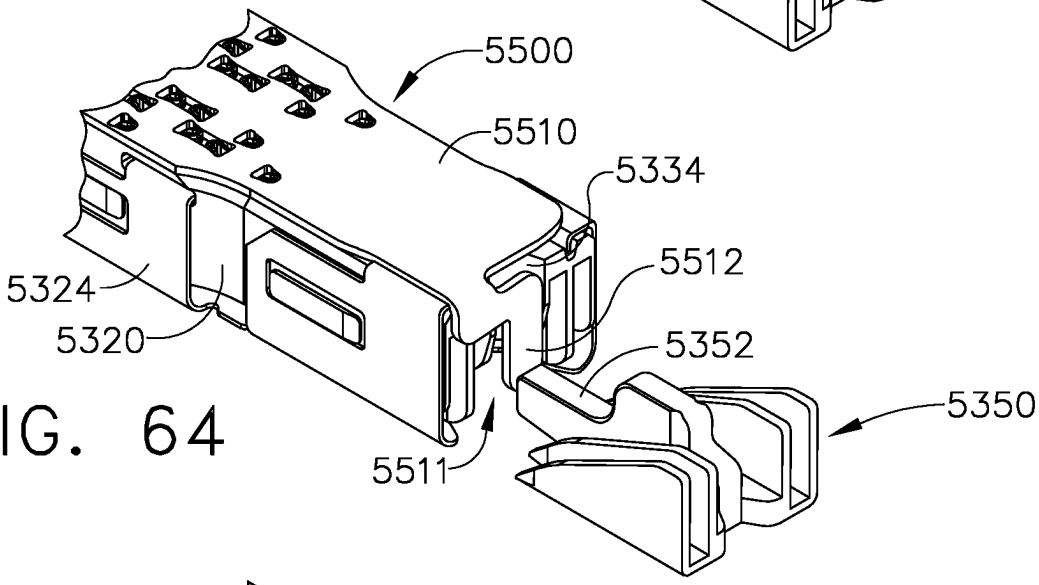

FIG. 64

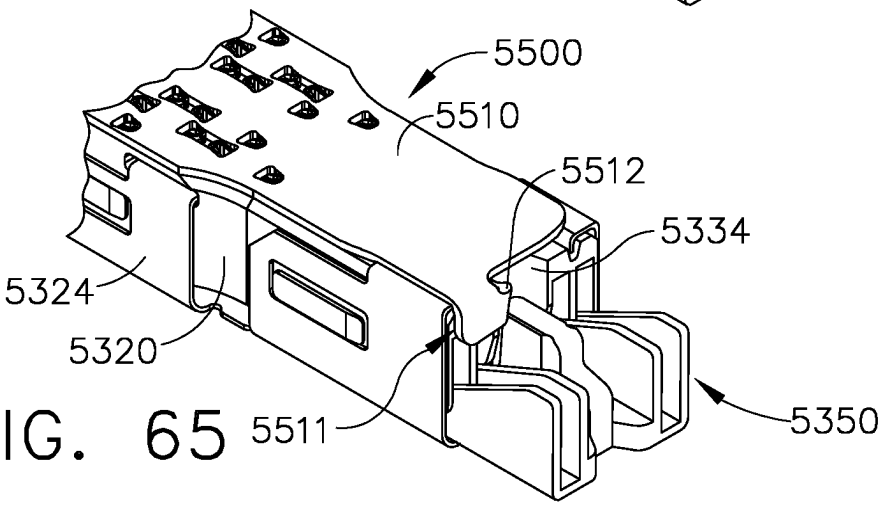

FIG. 65

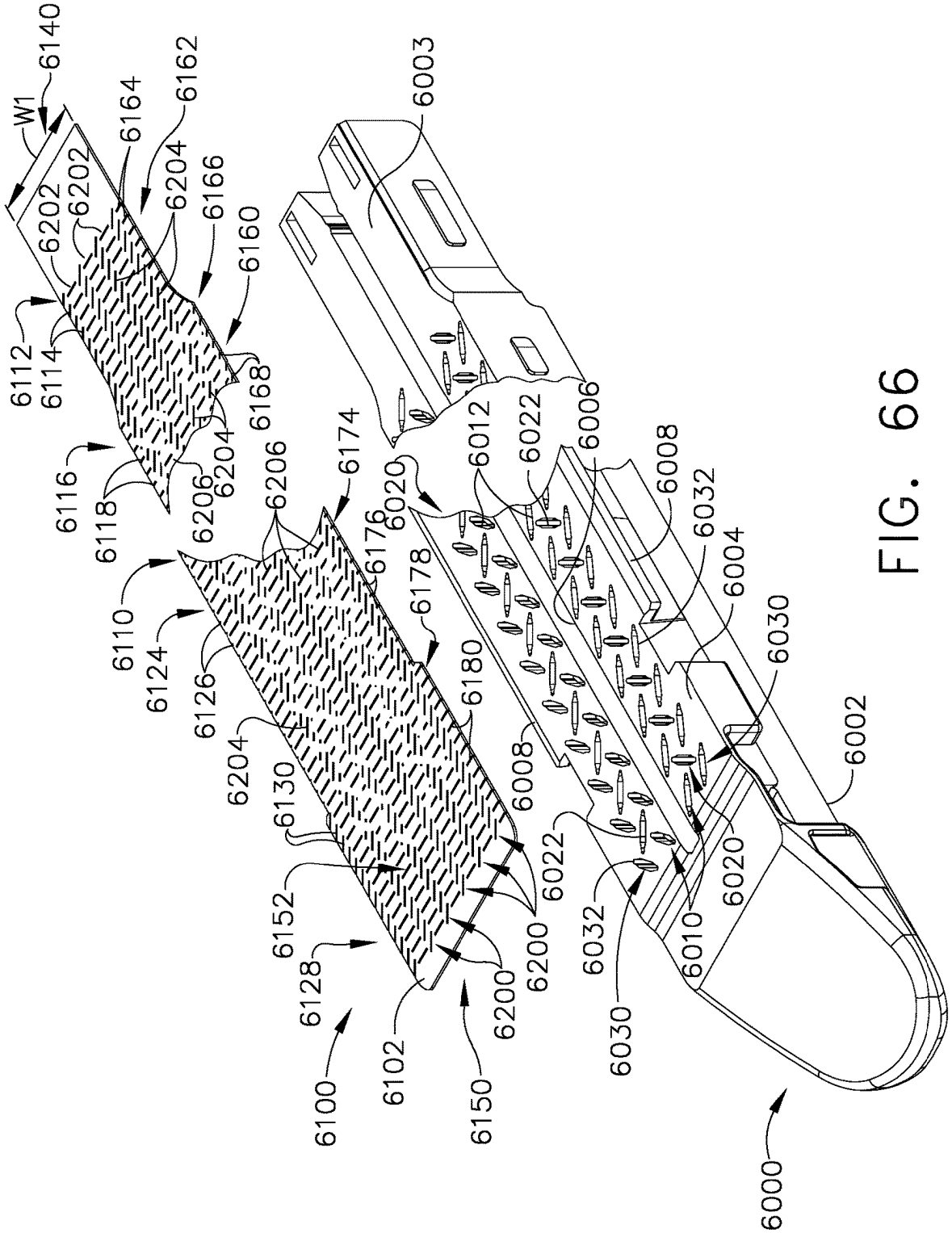
6140
W1
6164
6162
6202
6204
6166
6202
6160
6112
6114
6168
6204
6116
6118
6206
6174
6206
6176
6110
6178
6124
6126
6180
6204
6130
6152
6128
6100
6102
6150
6200
6200
6022
6020
6012
6022
6006
6008
6032
6004
6030
6008
6002
6020
6010
6032
6030
6003
6000

FIG. 66

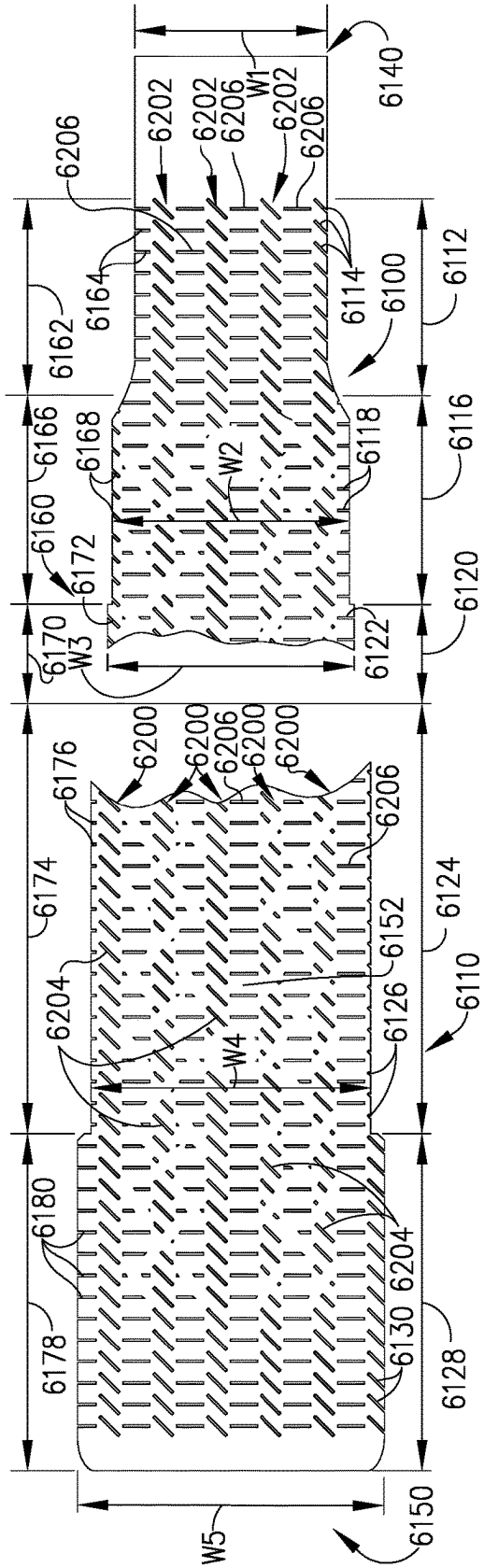
6140
W1
6202
6206
6202
6206
6202
6206
6164
6114
6100
6112
6162
6166
6168
6118
W2
6116
6160
6172
6120
6170
W3
6122
6176
6200
6200
6206
6200
6200
6206
6174
6124
6152
6204
6126
6110
W4
6180
6204
6130
6178
6128
W5
6150

FIG. 67

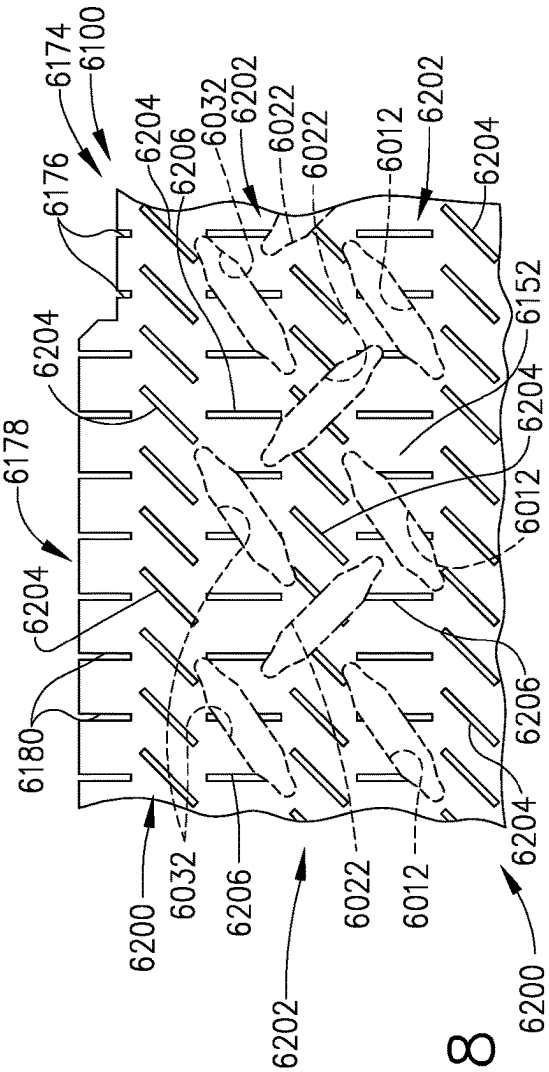
6174
6100
6176
6204
6206
6032
6202
6022
6022
6012
6202
6204
6204
6152
6178
6204
6012
6204
6180
6206
6200
6032
6206
6022
6012
6204
6202
6200

FIG. 68

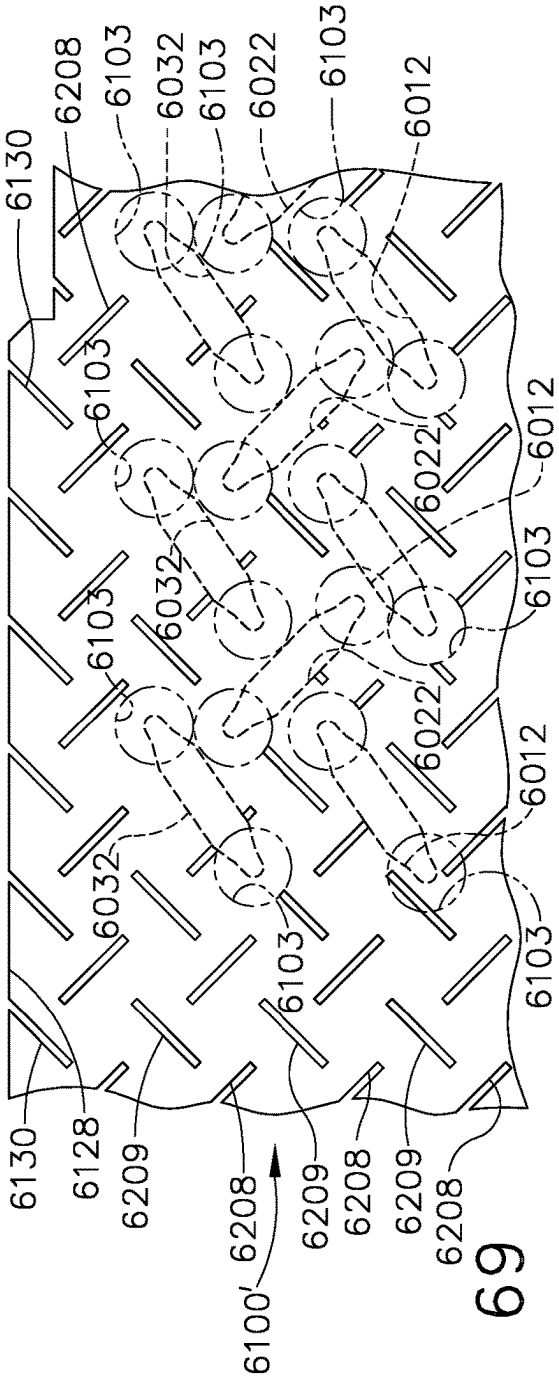
6130
6208
6103
6032
6103
6022
6103
6012
6103
6012
6022
6103
6032
6103
6022
6012
6032
6103
6130
6128
6209
6208
6209
6208
6209
6208
6100'

FIG. 69

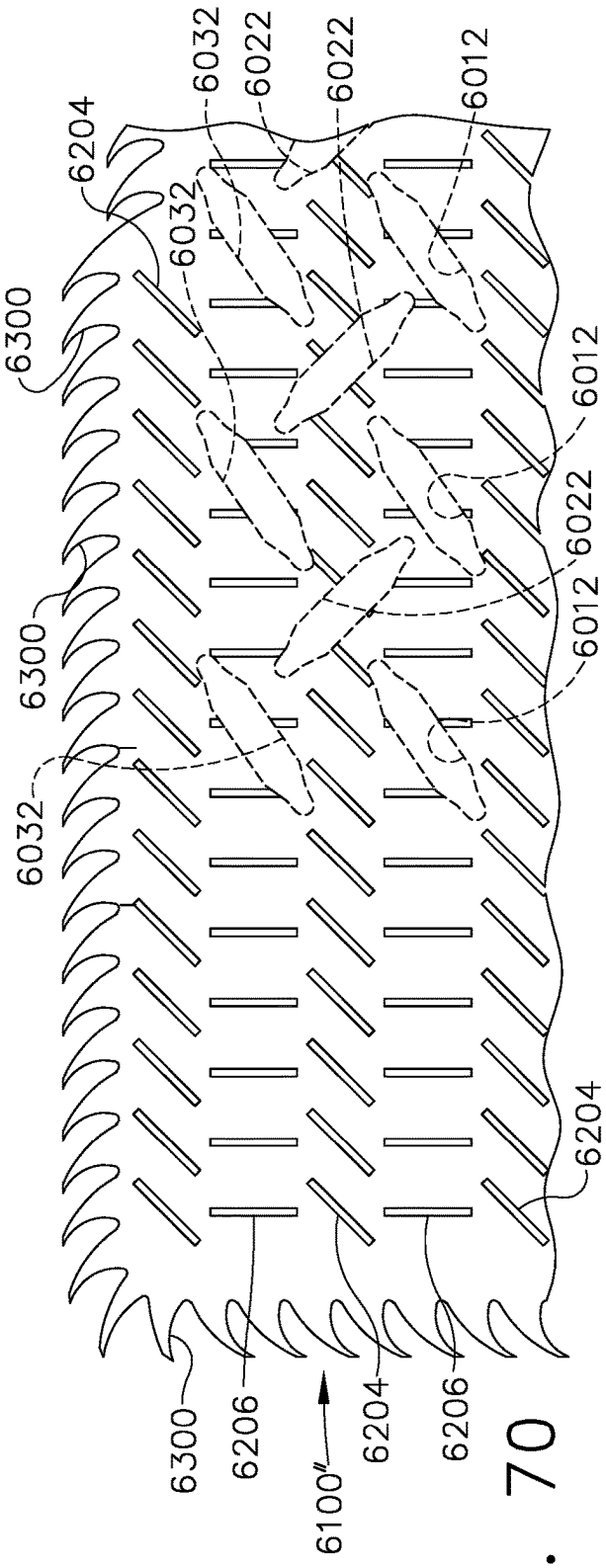
6204
6032
6022
6022
6012
6032
6300
6012
6022
6012
6300
6032
6204
6300
6206
6100"
6204
6206

FIG. 70

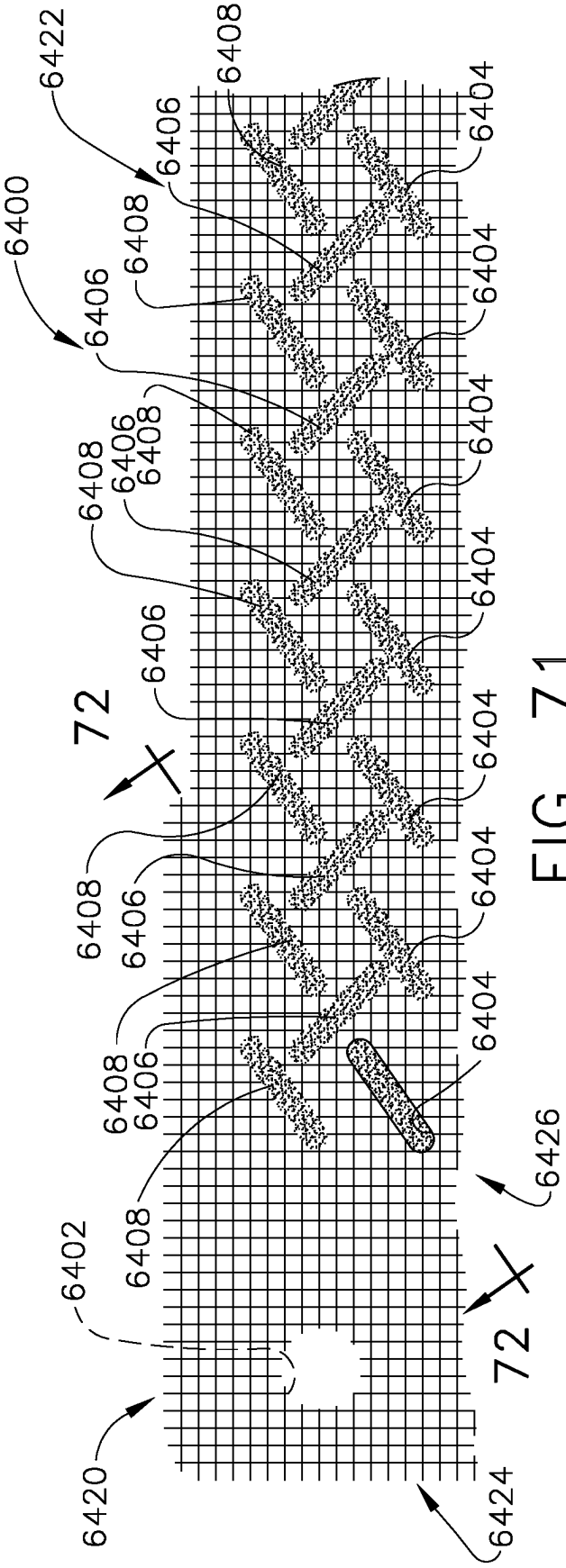
6400
6402
6404
6406
6408
6420
6422
6424
6426
72
72

FIG. 71

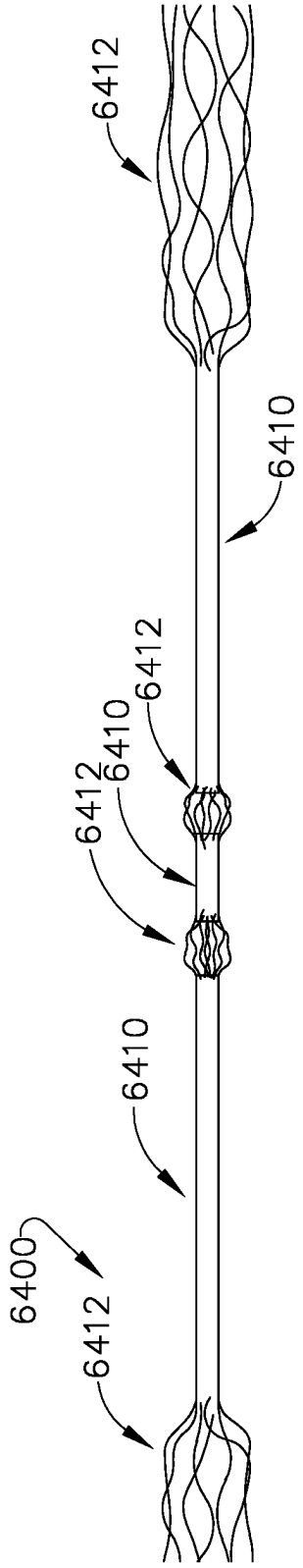
6400
6410
6412

FIG. 72

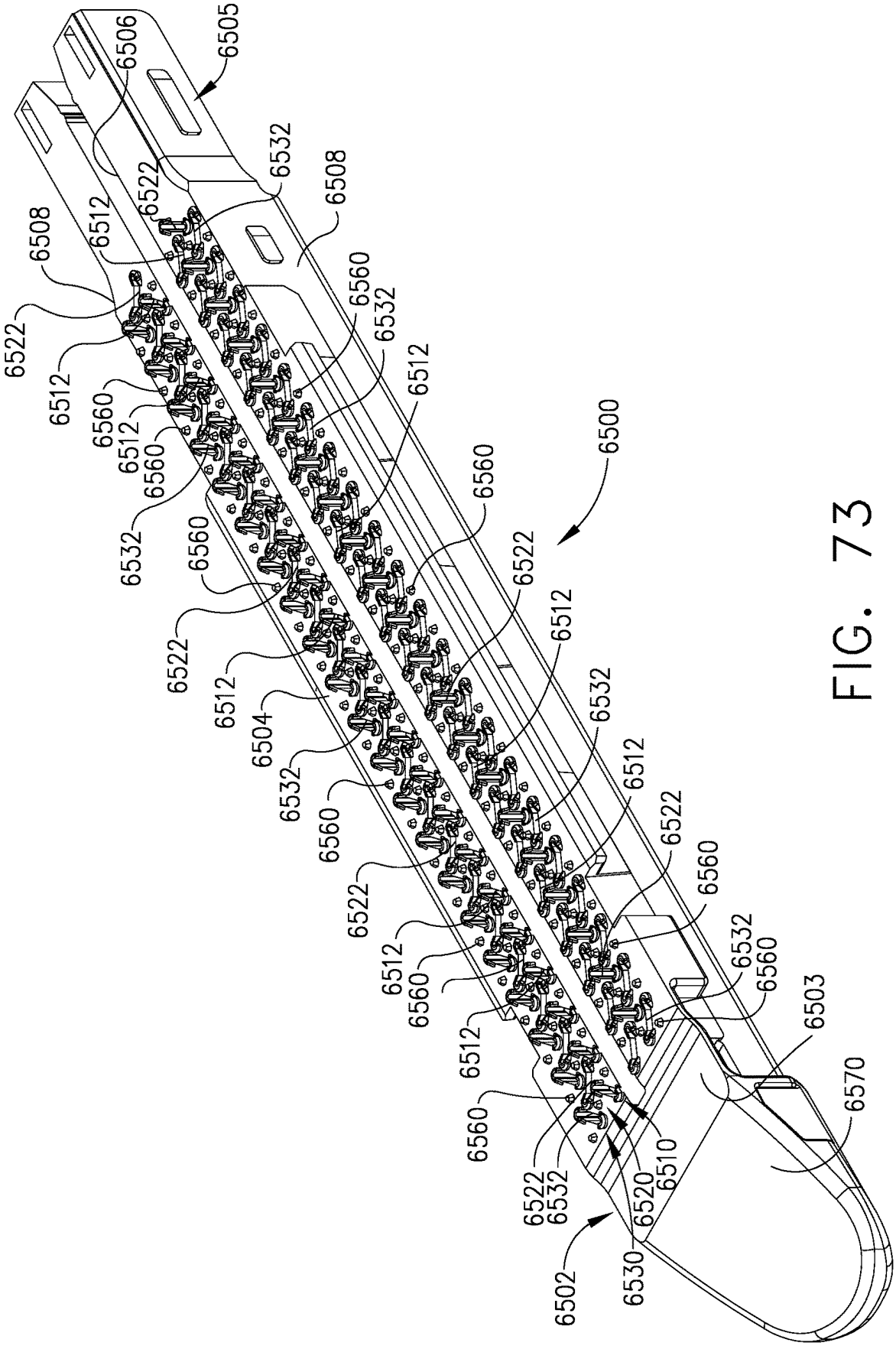
6505
6506
6532
6508
6522
6512
6508
6522
6512
6560
6512
6560
6532
6532
6560
6522
6512
6504
6532
6560
6522
6512
6560
6512
6560
6522
6532
6512
6522
6560
6532
6560
6503
6570
6510
6520
6530
6502
6500

FIG. 73

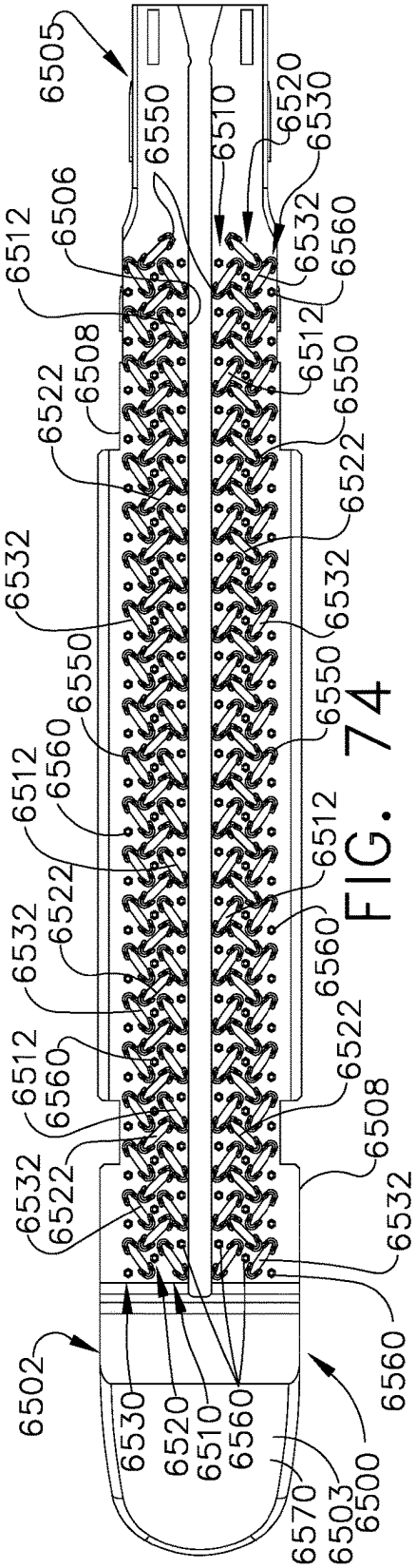
6505
6550
6510
6520
6530
6506
6512
6532
6560
6508
6522
6550
6532
6550
6560
6512
6522
6532
6512
6560
6522
6508
6532
6560
6502
6530
6520
6510
6560
6570
6503
6500

FIG. 74

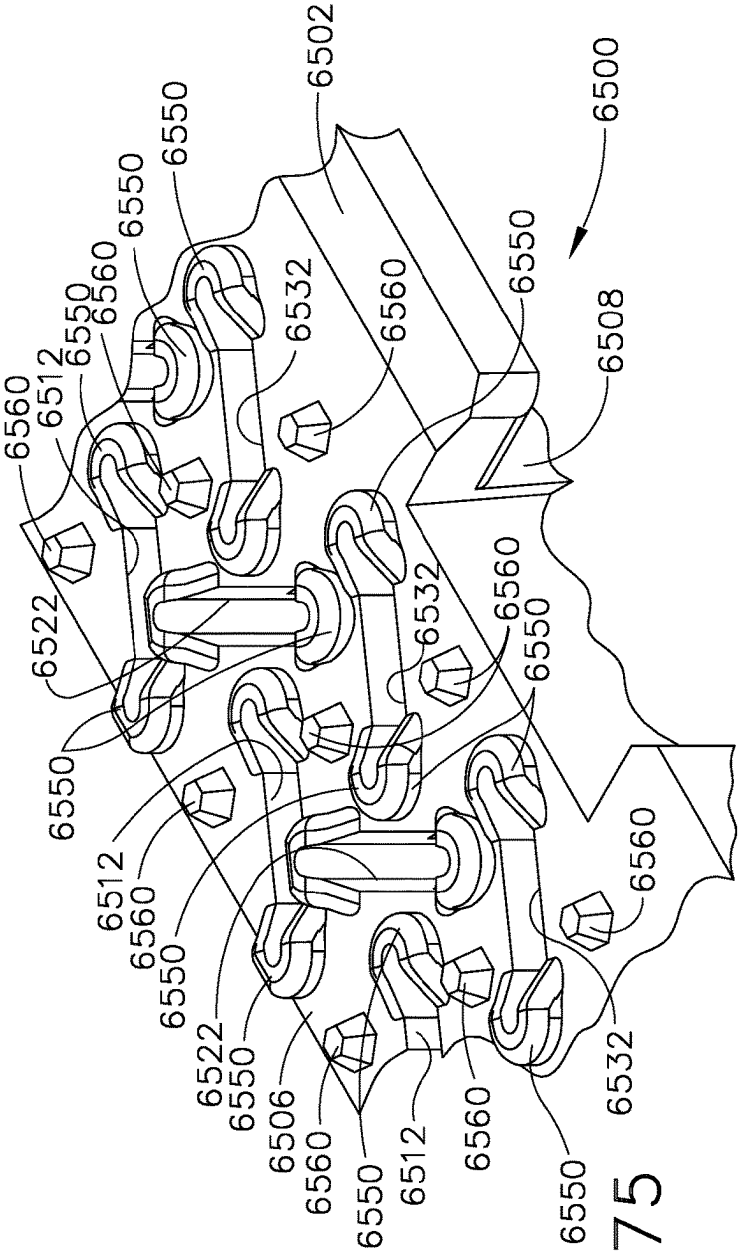
6502
6500
6550
6550
6560
6532
6560
6550
6508
6512
6560
6522
6532
6560
6550
6550
6512
6560
6550
6522
6550
6506
6560
6550
6512
6560
6550
6532
6560

FIG. 75

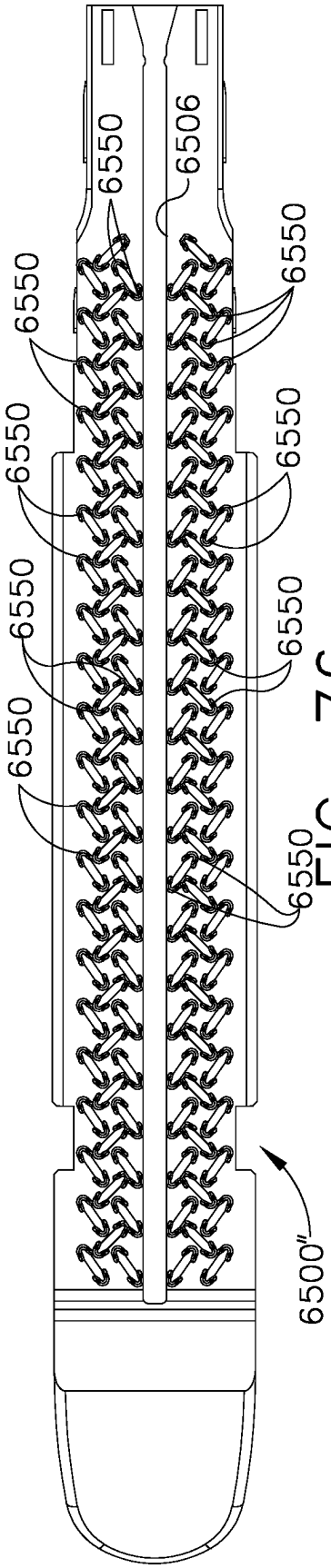
6550
6506
6550
6550
6550
6550
6550
6550
6550
6550
6550
6500''

FIG. 76

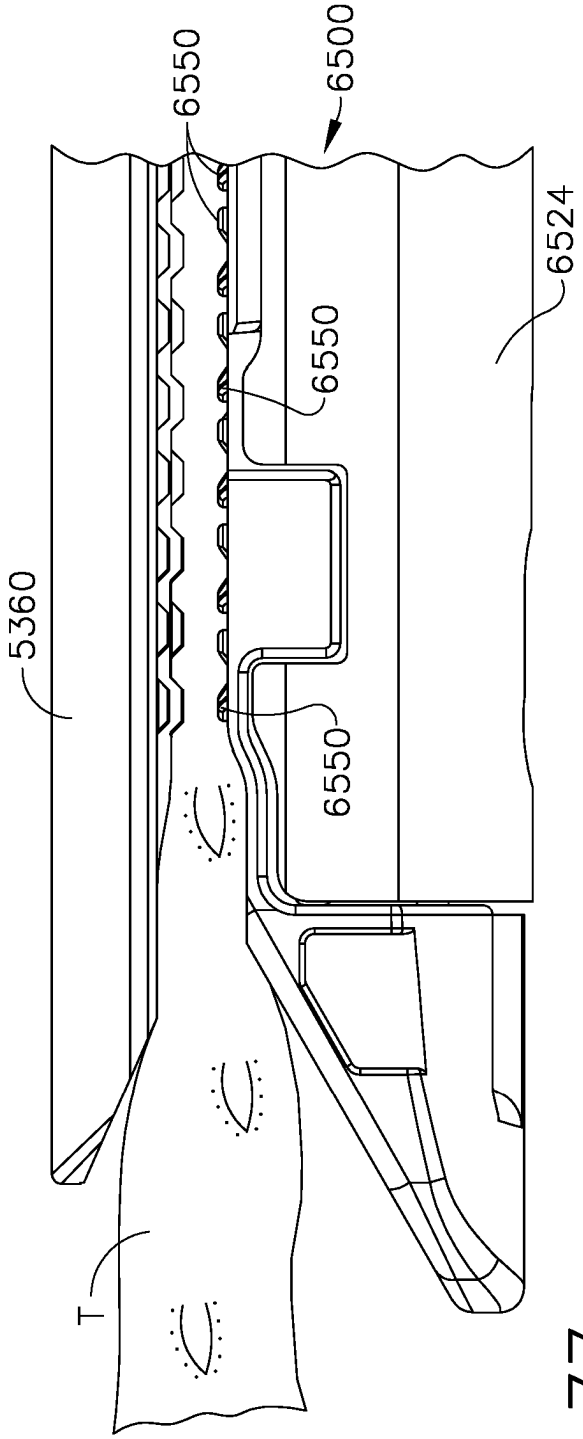
6550
6500
6524
6550
5360
6550
T

FIG. 77

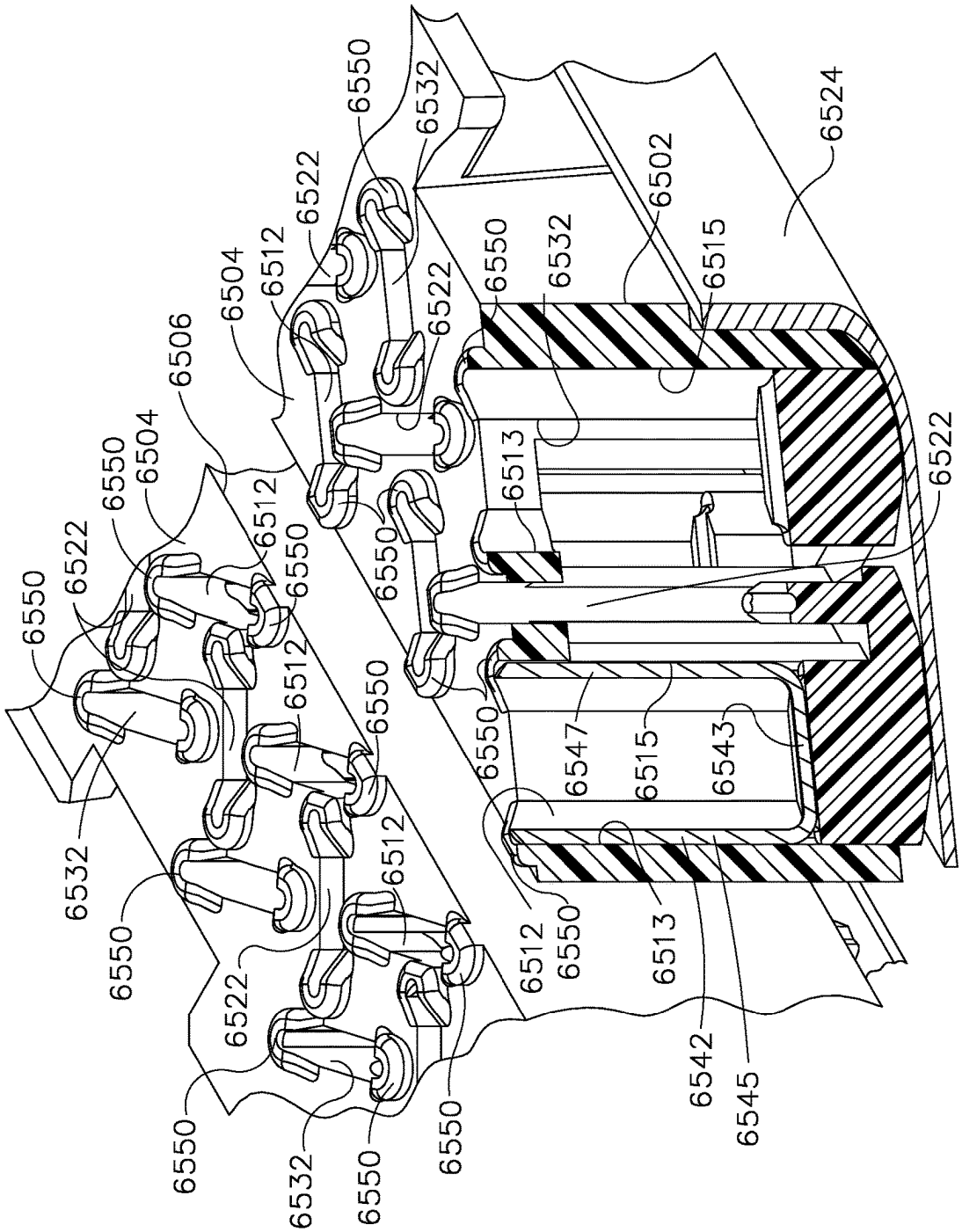
6550
6532
6522
6512
6504
6506
6502
6515
6524
6513
6547
6543
6542
6545

FIG. 78

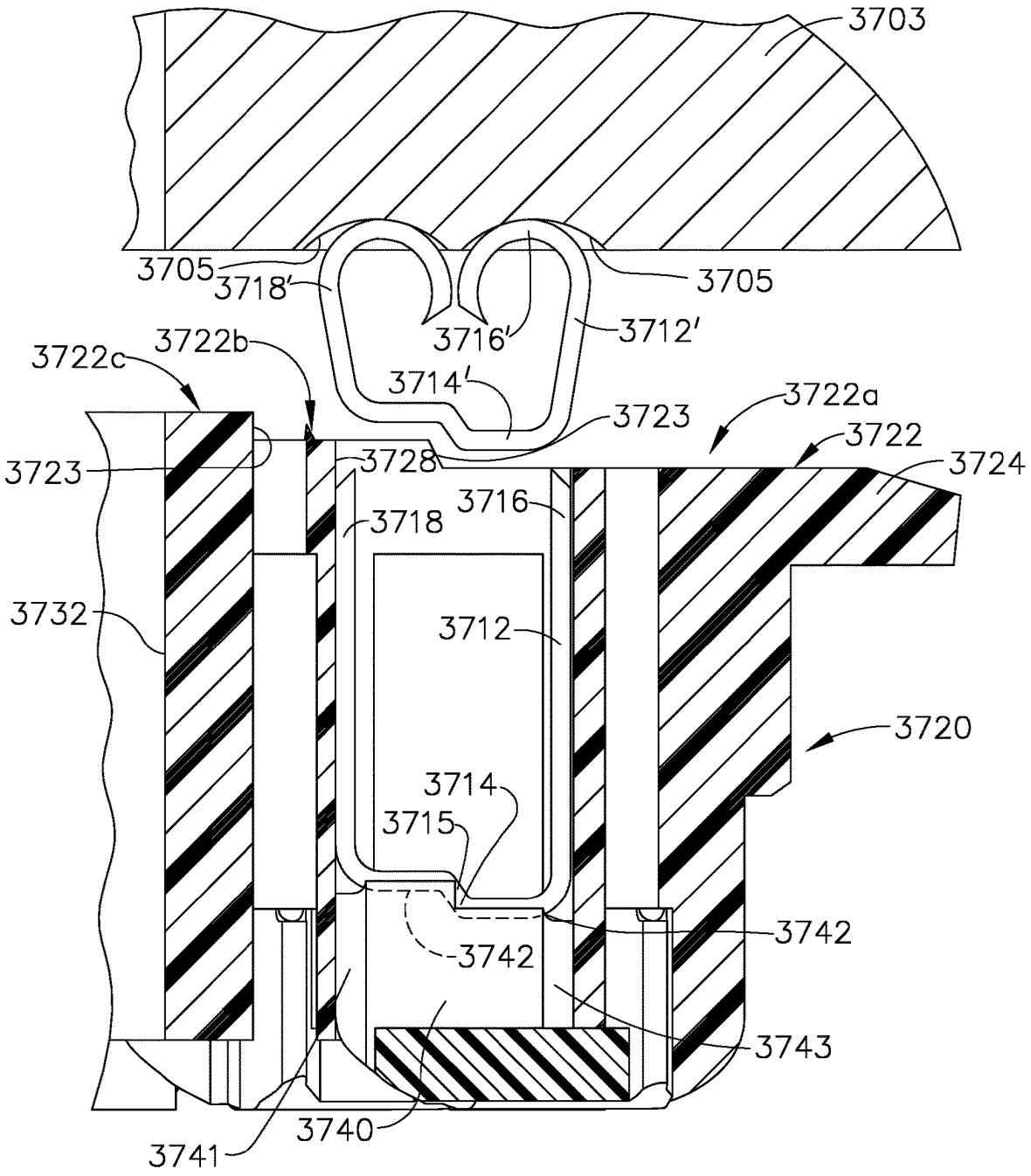
3703
3705
3718′
3705
3716′
3712′
3722c
3722b
3714′
3723
3722a
3722
3723
3728
3724
3716
3718
3732
3712
3720
3714
3715
3742
3742
3743
3740
3741

FIG. 79

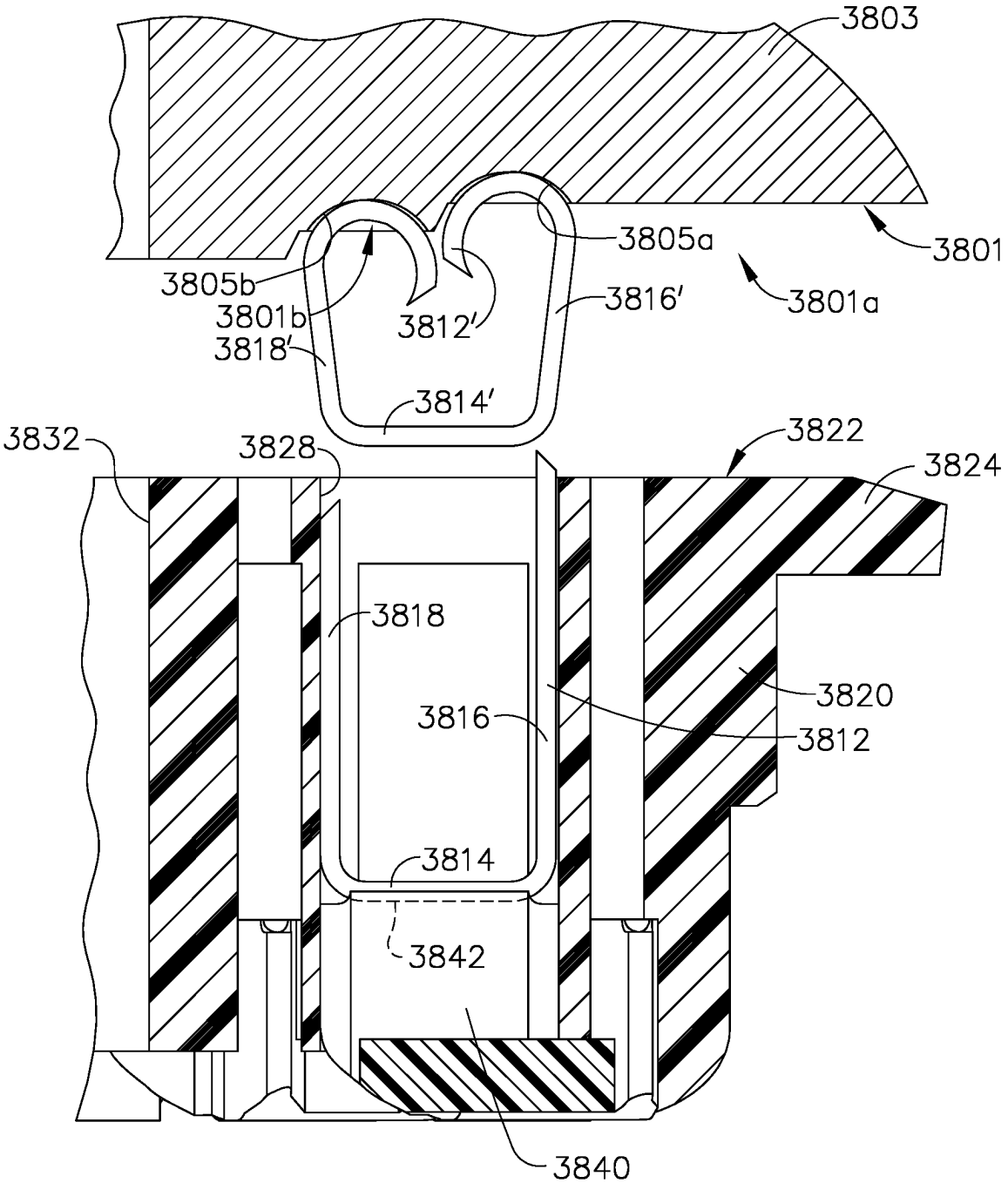
3803
3805a
3801
3805b
3801b
3818′
3812′
3816′
3801a
3814′
3832
3828
3822
3824
3818
3820
3816
3812
3814
3842
3840

FIG. 80

METHOD FOR CREATING A FLEXIBLE STAPLE LINE

CROSS-REFERENCE TO RELATED APPLICATIONS

This application is a continuation application claiming priority under 35 U.S.C. § 120 to U.S. patent application Ser. No. 16/411,411, entitled METHOD FOR CREATING A FLEXIBLE STAPLE LINE, now U.S. Patent Application Publication No. 2019/0328390, which is a continuation application claiming priority under 35 U.S.C. § 120 to U.S. patent application Ser. No. 14/498,145, entitled METHOD FOR CREATING A FLEXIBLE STAPLE LINE, filed Sep. 26, 2014, which issued on Jun. 25, 2019 as U.S. Pat. No. 10,327,764, the entire disclosures of which are hereby incorporated by reference herein.

BACKGROUND

The present invention relates to stapling instruments and, in various embodiments, to a surgical stapling instrument for producing one or more rows of staples.

A stapling instrument can include a pair of cooperating elongate jaw members, wherein each jaw member can be adapted to be inserted into a patient and positioned relative to tissue that is to be stapled and/or incised. In various embodiments, one of the jaw members can support a staple cartridge with at least two laterally spaced rows of staples contained therein, and the other jaw member can support an anvil with staple-forming pockets aligned with the rows of staples in the staple cartridge. Generally, the stapling instrument can further include a pusher bar and a knife blade which are slidable relative to the jaw members to sequentially eject the staples from the staple cartridge via camming surfaces on the pusher bar and/or camming surfaces on a wedge sled that is pushed by the pusher bar. In at least one embodiment, the camming surfaces can be configured to activate a plurality of staple drivers carried by the cartridge and associated with the staples in order to push the staples against the anvil and form laterally spaced rows of deformed staples in the tissue gripped between the jaw members. In at least one embodiment, the knife blade can trail the camming surfaces and cut the tissue along a line between the staple rows. Examples of such stapling instruments are disclosed in U.S. Pat. No. 7,794,475, entitled SURGICAL STAPLES HAVING COMPRESSIBLE OR CRUSHABLE MEMBERS FOR SECURING TISSUE THEREIN AND STAPLING INSTRUMENTS FOR DEPLOYING THE SAME, the entire disclosure of which is hereby incorporated by reference herein.

The foregoing discussion is intended only to illustrate various aspects of the related art in the field of the invention at the time, and should not be taken as a disavowal of claim scope.

BRIEF DESCRIPTION OF THE DRAWINGS

Various features of the embodiments described herein are set forth with particularity in the appended claims. The various embodiments, however, both as to organization and methods of operation, together with advantages thereof, may be understood in accordance with the following description taken in conjunction with the accompanying drawings as follows:

FIG. **1** is a perspective view of a surgical fastening instrument in accordance with at least one embodiment;

FIG. **2** is an exploded view of an end effector of the surgical fastening instrument of FIG. **1**;

FIG. **3** is a top plan view of a fastener cartridge of the end effector of FIG. **2**;

FIG. **4** is a bottom plan view of an anvil of the end effector of FIG. **2**;

FIG. **5** is a partial bottom plan view of an anvil in accordance with at least one embodiment;

FIG. **6** is a partial bottom plan view of an anvil in accordance with at least one embodiment;

FIG. **7** is an exploded perspective view of an end effector including a staple cartridge that includes angularly-oriented staples, a group of first multi-staple drivers, and a group of second multi-staple drivers, according to various embodiments of the present disclosure;

FIG. **8** is a perspective view of one of the first multi-staple drivers of FIG. **7**;

FIG. **8**A is a plan view of the first multi-staple driver of FIG. **8**;

FIG. **8**B is a perspective view of the first multi-staple driver of FIG. **8** and further showing staples of FIG. **7** supported by the multi-staple driver;

FIG. **8**C is perspective view of one of the second multi-staple drivers of FIG. **7**;

FIG. **8**D is a plan view of the second multi-staple driver of FIG. **8**C;

FIG. **9** is a perspective view of the second multi-staple driver of FIG. **8**C and further showing staples of FIG. **7** supported by the multi-staple driver;

FIG. **10** is a plan view of a staple cartridge according to various embodiments of the present disclosure;

FIG. **11** is a plan view of an arrangement of multi-staple drivers and driving wedges, according to various embodiments of the present disclosure;

FIG. **12** is a plan view of an arrangement of multi-staple drivers and driving wedges, according to various embodiments of the present disclosure;

FIG. **13** is a plan view of an arrangement of multi-staple drivers and driving wedges, according to various embodiments of the present disclosure;

FIG. **14** is a plan view of an arrangement of single-staple drivers and driving wedges, according to various embodiments of the present disclosure;

FIG. **15** is an elevation view of the driving wedges of FIG. **14**;

FIG. **16** is a plan view of an arrangement of staples and driving wedges, according to various embodiments of the present disclosure;

FIG. **17** is a perspective view of a staple in accordance with at least one embodiment illustrated in an unformed, or unfired, configuration;

FIG. **18** is an elevational view of the staple of FIG. **17**;

FIG. **19** is an elevational view of the staple of FIG. **17** in a formed, or fired, configuration;

FIG. **20** is an elevational view of a staple comprising an expandable coating in accordance with at least one embodiment illustrated in an unformed, or unfired, configuration;

FIG. **21** is a partial bottom plan view of the staple of FIG. **20** deployed into the tissue of a patient;

FIG. **22** is a partial bottom plan view of the staple of FIG. **20** deployed into the tissue of a patient illustrating the coating in an expanded condition;

FIG. **23** depicts tissue stapled by a staple line in accordance with at least one embodiment;

FIG. **24** depicts tissue stapled by a staple line in accordance with at least one embodiment;

FIG. **25** depicts tissue stapled by a staple line in accordance with at least one embodiment;

FIG. **26** is an elevation view of a driving wedge and a staple, according to various embodiments of the present disclosure;

FIG. **27** is a perspective view of the driving wedge and the staple of FIG. **26**;

FIG. **28** is a plan view of the driving wedge and the staple of FIG. **26**;

FIG. **29** is a perspective view of a circular stapling device;

FIG. **29**A is perspective view of a portion of a stapling head of a circular stapling device and a fastener cartridge assembly;

FIG. **30** is a perspective view of portion of a stapling head of a circular stapling device and another fastener cartridge assembly;

FIG. **31** is a perspective view of portion of a stapling head of a circular stapling device and another fastener cartridge assembly;

FIG. **32** depicts tissue stapled by a staple line in accordance with at least one embodiment wherein at least some of the staples in the staple line overlap;

FIG. **33** is a partial plan view of a staple cartridge configured to deploy the staple line of FIG. **32**;

FIG. **34** is a partial plan view of an anvil configured to deform the staples ejected from the staple cartridge of FIG. **33**;

FIG. **35** is a partial plan view of a staple cartridge configured to deploy a staple line in accordance with at least one embodiment;

FIG. **36** is a partial plan view of an anvil configured to deform the staples ejected from the staple cartridge of FIG. **35**;

FIG. **37** is an exploded perspective view of an end effector including a driverless staple cartridge having a sled, according to various embodiments of the present disclosure;

FIG. **38** is a perspective view of the sled of FIG. **37**;

FIG. **38**A is a partial plan view of the sled of FIG. **37** and a staple, depicting the deployment progression of the staple;

FIG. **38**B is an elevation view of the sled of FIG. **37** and a staple, depicting the deployment progression of the staple;

FIG. **39** is a perspective view of a sled for the driverless staple cartridge depicted in FIG. **37**, according to various embodiments of the present disclosure;

FIG. **39**A is a partial plan view of a driverless staple cartridge having angled staples and the sled of FIG. **39**, according to various embodiments of the present disclosure;

FIG. **39**B is a partial perspective view of the sled of FIG. **39** and the staples of FIG. **20**, according to various embodiments of the present disclosure;

FIG. **40** is a partial, perspective view of a sled and a staple, according to various embodiments of the present disclosure;

FIG. **41** is a plan view of an array of staples, according to various embodiments of the present disclosure;

FIG. **42** is a plan view of an array of staples and driving wedges, according to various embodiments of the present disclosure;

FIG. **43** is a partial perspective view of a staple cartridge having an arrangement of angled staple cavities therein, according to various embodiments of the present disclosure;

FIG. **44** is a partial plan view of the staple cartridge of FIG. **43**;

FIG. **45** is a perspective cross-sectional partial view of the staple cartridge of FIG. **43**, depicting staples and drivers positioned within the staple cartridge;

FIG. **46** is a partial, perspective view of a staple cartridge having an arrangement of angled staple cavities therein, according to various embodiments of the present disclosure;

FIG. **47** is a partial, plan view of the staple cartridge of FIG. **46**;

FIG. **48** is a partial, perspective cross-sectional view of the staple cartridge of FIG. **46**;

FIG. **49** is a partial, perspective view of a staple cartridge having an arrangement of angled staple cavities therein, according to various embodiments of the present disclosure;

FIG. **50** is a partial, plan view of the staple cartridge of FIG. **49**;

FIG. **51** is a partial, perspective cross-sectional view of the staple cartridge of FIG. **49**, depicting staples and multi-staple drivers positioned within the staple cartridge;

FIG. **52** depicts a previous staple pattern implanted in tissue;

FIG. **52**A depicts the staple pattern deployed by the staple cartridge of FIG. **3**;

FIG. **52**B depicts the staple pattern of FIG. **52**A in a stretched condition;

FIG. **53** is a partial plan view of a staple cartridge comprising a cartridge body and an implantable adjunct material positioned on the cartridge body in accordance with at least one embodiment;

FIG. **54** is a partial plan view of an implantable adjunct material in accordance with at least one embodiment;

FIG. **55** is a partial plan view of a staple cartridge comprising a cartridge body and an implantable adjunct material positioned on the cartridge body in accordance with at least one embodiment;

FIG. **56** is a partial plan view of an implantable adjunct material in accordance with at least one embodiment;

FIG. **57** is a partial plan view of an implantable adjunct material in accordance with at least one embodiment;

FIG. **58** is an exploded perspective view of an end effector and a portion of a surgical stapling instrument;

FIG. **59** is a perspective view of a surgical staple cartridge with a buttress member supported on the deck of the staple cartridge in a position wherein the buttress may be removed from the cartridge;

FIG. **60** is a top view of the surgical staple cartridge and buttress member of FIG. **59**;

FIG. **61** is a perspective view of a portion of the surgical staple cartridge and buttress member of FIGS. **59** and **60**;

FIG. **62** is a top view of another portion of the surgical staple cartridge and buttress member of FIGS. **59-61**:

FIG. **63** is a perspective view of a proximal end of the surgical staple cartridge and buttress member of FIGS. **59-62**;

FIG. **64** is another perspective view of the proximal end of the surgical staple cartridge and buttress member of FIGS. **59-63** with the retaining tab folded over for insertion into the longitudinal slot in the cartridge;

FIG. **65** is another perspective view of the proximal end of the surgical staple cartridge and buttress member of FIGS. **59-64** with the retaining tab inserted into the longitudinal slot and retained therein by the staple sled;

FIG. **66** is an exploded assembly view of another surgical staple cartridge and another buttress member;

FIG. **67** is a bottom view of the buttress member of FIG. **66**;

FIG. **68** is an enlarged view of a portion of the buttress member of FIG. **67**, with positions of the underlying staple cavities in the staple cartridge shown in broken lines;

FIG. **69** is an enlarged view of a portion of another buttress member, with positions of the underlying staple cavities in the staple cartridge shown in broken lines;

FIG. **70** is a top view of a portion of another buttress member, with positions of the underlying staple cavities in the staple cartridge shown in broken lines;

FIG. **71** is a top view of a portion of another buttress member;

FIG. **72** is a cross-sectional view of the buttress member of FIG. **71** taken along line **72-72** in FIG. **71**;

FIG. **73** is a perspective view of another surgical staple cartridge;

FIG. **74** is a top view of the surgical staple cartridge of FIG. **73**;

FIG. **75** is an enlarged perspective view of a portion of the surgical staple cartridge of FIGS. **73** and **74**;

FIG. **76** is a top view of another surgical staple cartridge;

FIG. **77** is a side elevational view of a portion of a surgical stapling device with tissue "T" clamped between the surgical staple cartridge of FIG. **76** and the anvil of the device;

FIG. **78** is an enlarged view of a portion of the surgical staple cartridge of FIGS. **76** and **77** with a portion thereof shown in cross-section;

FIG. **79** is a partial, cross-sectional elevation view of a staple cartridge and an anvil, according to various embodiments of the present disclosure; and

FIG. **80** is a partial, cross-sectional elevation view of a staple cartridge and an anvil, according to various embodiments of the present disclosure.

Corresponding reference characters indicate corresponding parts throughout the several views. The exemplifications set out herein illustrate various embodiments of the invention, in one form, and such exemplifications are not to be construed as limiting the scope of the invention in any manner.

DETAILED DESCRIPTION

Applicant of the present application owns the following patent applications which were filed on Sep. 26, 2014 and which are each herein incorporated by reference in their respective entireties:

U.S. patent application Ser. No. 14/498,070, entitled CIRCULAR FASTENER CARTRIDGES FOR APPLYING RADIALLY EXPANDABLE FASTENER LINES, now U.S. Patent Application Publication No. 2016/0089146;

U.S. patent application Ser. No. 14/498,087, entitled SURGICAL STAPLE AND DRIVER ARRANGEMENTS FOR STAPLE CARTRIDGES, now U.S. Pat. No. 10,206,677;

U.S. patent application Ser. No. 14/498,105, entitled SURGICAL STAPLE AND DRIVER ARRANGEMENTS FOR STAPLE CARTRIDGES, now U.S. Pat. No. 9,801,628;

U.S. patent application Ser. No. 14/498,107, entitled SURGICAL STAPLING BUTTRESSES AND ADJUNCT MATERIALS, now U.S. Pat. No. 9,943,310; and

U.S. patent application Ser. No. 14/498,121, entitled FASTENER CARTRIDGE FOR CREATING A FLEXIBLE STAPLE LINE, now U.S. Pat. No. 9,801,627.

Applicant of the present application owns the following patent applications which were filed on Jun. 30, 2014 and which are each herein incorporated by reference in their respective entireties:

U.S. patent application Ser. No. 14/318,996, entitled FASTENER CARTRIDGES INCLUDING EXTENSIONS HAVING DIFFERENT CONFIGURATIONS, now U.S. Patent Application Publication No. 2015/0297228;

U.S. patent application Ser. No. 14/319,006, entitled FASTENER CARTRIDGE COMPRISING FASTENER CAVITIES INCLUDING FASTENER CONTROL FEATURES, now U.S. Pat. No. 10,010,324;

U.S. patent application Ser. No. 14/319,014, entitled END EFFECTOR COMPRISING AN ANVIL INCLUDING PROJECTIONS EXTENDING THEREFROM, now U.S. Patent Application Publication No. 2015/0297234;

U.S. patent application Ser. No. 14/318,991, entitled SURGICAL FASTENER CARTRIDGES WITH DRIVER STABILIZING ARRANGEMENTS, now U.S. Pat. No. 9,833,241;

U.S. patent application Ser. No. 14/319,004, entitled SURGICAL END EFFECTORS WITH FIRING ELEMENT MONITORING ARRANGEMENTS, now U.S. Pat. No. 9,844,369;

U.S. patent application Ser. No. 14/319,008, entitled FASTENER CARTRIDGE COMPRISING NON-UNIFORM FASTENERS, now U.S. Patent Application Publication No. 2015/0297232;

U.S. patent application Ser. No. 14/318,997, entitled FASTENER CARTRIDGE COMPRISING DEPLOYABLE TISSUE ENGAGING MEMBERS, now U.S. Patent Application Publication No. 2015/0297229;

U.S. patent application Ser. No. 14/319,002, entitled FASTENER CARTRIDGE COMPRISING TISSUE CONTROL FEATURES, now U.S. Pat. No. 9,877,721;

U.S. patent application Ser. No. 14/319,013, entitled FASTENER CARTRIDGE ASSEMBLIES AND STAPLE RETAINER COVER ARRANGEMENTS, now U.S. Patent Application Publication No. 2015/0297233; and

U.S. patent application Ser. No. 14/319,016, entitled FASTENER CARTRIDGE INCLUDING A LAYER ATTACHED THERETO, now U.S. Patent Application Publication No. 2015/0297235.

Numerous specific details are set forth to provide a thorough understanding of the overall structure, function, manufacture, and use of the embodiments as described in the specification and illustrated in the accompanying drawings. It will be understood by those skilled in the art, however, that the embodiments may be practiced without such specific details. In other instances, well-known operations, components, and elements have not been described in detail so as not to obscure the embodiments described in the specification. Those of ordinary skill in the art will understand that the embodiments described and illustrated herein are non-limiting examples, and thus it can be appreciated that the specific structural and functional details disclosed herein may be representative and illustrative. Variations and changes thereto may be made without departing from the scope of the claims.

The terms "comprise" (and any form of comprise, such as "comprises" and "comprising"), "have" (and any form of have, such as "has" and "having"), "include" (and any form of include, such as "includes" and "including") and "contain" (and any form of contain, such as "contains" and "containing") are open-ended linking verbs. As a result, a surgical system, device, or apparatus that "comprises," "has," "includes" or "contains" one or more elements possesses those one or more elements, but is not limited to possessing only those one or more elements. Likewise, an element of a system, device, or apparatus that "comprises," "has," "includes" or "contains" one or more features possesses those one or more features, but is not limited to possessing only those one or more features.

The terms "proximal" and "distal" are used herein with reference to a clinician manipulating the handle portion of the surgical instrument. The term "proximal" referring to the portion closest to the clinician and the term "distal" referring to the portion located away from the clinician. It will be further appreciated that, for convenience and clarity, spatial terms such as "vertical", "horizontal", "up", and "down" may be used herein with respect to the drawings. However, surgical instruments are used in many orientations and positions, and these terms are not intended to be limiting and/or absolute.

A surgical fastening instrument **100** is depicted in FIG. **1**. The surgical fastening instrument **100** is configured to deploy an expandable staple line. Various expandable staple lines are disclosed herein and the surgical fastening instrument **100** is capable of deploying any one of these expandable staple lines. Moreover, surgical instruments other than the surgical fastening instrument **100** are capable of deploying any one of the expandable staple lines disclosed herein.

The surgical fastening instrument **100** comprises a handle **110**, a shaft **120**, and an end effector **200**. The handle **110** comprises a pistol grip **140**, a closure trigger **150** configured to operate a closure system, a firing trigger **160** configured to operate a firing system, and an articulation actuator **170** configured to operate an articulation system for articulating the end effector **200** relative to the shaft **120**. The disclosure of U.S. Pat. No. 7,845,537, entitled SURGICAL INSTRUMENT HAVING RECORDING CAPABILITIES, which issued on Dec. 7, 2010, is incorporated by reference in its entirety. Other embodiments are envisioned which comprise a single trigger configured to operate a closure system and a firing system. Various embodiments are envisioned in which the end effector of the surgical instrument is not articulatable. The disclosure of U.S. patent application Ser. No. 13/974,166, entitled FIRING MEMBER RETRACTION DEVICES FOR POWERED SURGICAL INSTRUMENTS, which was filed on Aug. 23, 2013, now U.S. Pat. No. 9,700,310, is incorporated by reference in its entirety.

The closure trigger **150** is rotatable toward the pistol grip **140** to actuate the closure system. Referring primarily to FIG. **2**, the closure system comprises a closure tube **122** which is advanced distally when the closure trigger **150** is moved toward the pistol grip **140**. The closure tube **122** is engaged with a first jaw including an anvil **220** of the end effector **200**. In at least one instance, the anvil **220** comprises one or more projections **228** extending therefrom which are positioned in one or more elongated slots **212** defined in a second jaw. The projections **228** and the elongated slots **212** are structured and arranged to permit the anvil **220** to be rotated between an open position and a closed position relative to a stationary, or fixed, cartridge channel **210** of the second jaw. In various alternative embodiments, a cartridge channel can be rotatable relative to a stationary, or fixed, anvil **220**. Regardless of whether the cartridge channel or the anvil of an end effector is fixed, the end effector may be articulatable or non-articulatable relative to the shaft.

Referring again to FIG. **2**, the anvil **220** includes a tab **226** which is engaged with a slot **124** defined in the closure tube **122**. When the closure tube **122** is moved distally by the closure trigger **150**, a sidewall of the slot **124** can engage the tab **226** and rotate the anvil **220** toward the cartridge channel **210**. When the closure tube **122** is moved proximally, another sidewall of the slot **124** can engage the tab **226** and rotate the anvil **220** away from the cartridge channel **210**. In some instances, a biasing spring can be positioned intermediate the anvil **220** and the cartridge channel **210** which can be configured to bias the anvil **220** away from the cartridge channel **210**.

Referring again to FIG. **2**, the firing trigger **160** is rotatable toward the pistol grip **140** to actuate the firing system. The firing system comprises a firing member extending within the shaft **120**. The firing system further comprises a sled **250** which is operably engaged with the firing member. When the firing trigger **160** is rotated toward the pistol grip **140**, the firing trigger **160** drives the firing member and the sled **250** distally within the end effector **200**. The end effector **200** further comprises a staple cartridge **230** positioned within the cartridge channel **210**. The staple cartridge **230** is replaceable and, thus, removable from the cartridge channel **210**; however, other embodiments are envisioned in which the staple cartridge **230** is not readily replaceable and/or removable from the cartridge channel **210**.

The staple cartridge **230** comprises a plurality of staple cavities **270**. Each staple cavity **270** is configured to removably store a staple therein, although it is possible that some staple cavities **270** may not contain a staple stored therein. The staple cartridge **230** further comprises a plurality of staple drivers **240** movably positioned therein. Each driver **240** is configured to support three staples and/or lift the three staples out of their respective staple cavities **270** at the same time, or concurrently. Although each driver **240** of the embodiment depicted in FIGS. **1-4** deploys three staples concurrently, other embodiments are envisioned in which a driver may deploy less than three staples or more than three staples concurrently. The sled **250** comprises one or more ramp surfaces **252** which are configured to slide under the drivers **240** and lift the drivers **240** upwardly toward a deck surface **233** of the staple cartridge **230**. The sled **250** is movable from a proximal end **231** of the staple cartridge **230** toward a distal end **232** to sequentially lift the drivers **240**. When the drivers **240** are lifted toward the deck by the sled **250**, the drivers **240** lift the staples toward the anvil **220**. As the sled **250** is progressed distally, the staples are driven against the anvil **220** and are ejected from the staple cavities **270** by the drivers **240**. The staple cartridge **230** can further comprise a support pan **260** attached thereto which extends around the bottom of the staple cartridge **230** and retains the drivers **240**, the staples, and/or the sled **250** within the cartridge **230**.

The sled **250** and/or the pusher member which advances the sled **250** distally can be configured to engage the first jaw including the anvil **220** and/or the second jaw including the staple cartridge **230** and position the anvil **220** and the staple cartridge **230** relative to one another. In at least one instance, the sled **250** comprises at least one first projection **256** extending therefrom which is configured to engage the anvil **220** and at least one second projection **258** configured to engage the cartridge channel **210**. The projections **256** and **258** can position the anvil **220** and the staple cartridge **230** relative to one another. As the sled **250** is advanced distally, the projections **256** and **258** can position the anvil **220** and set the tissue gap between the anvil **220** and the deck **233**.

The end effector **200** can further comprise a cutting member configured to incise tissue captured between the staple cartridge **230** and the anvil **220**. Referring again to FIG. **2**, the sled **250** includes a knife **254**; however, any suitable cutting member could be utilized. As the sled **250** is being advanced distally to deploy the staples from the staple cavities **270**, the knife **254** is moved distally to transect the tissue. In certain alternative embodiments, the firing member which pushes the sled **250** distally can include a cutting member. The cartridge **230** includes a longitudinal slot **234**

configured to at least partially receive the knife **254**. The anvil **220** also includes a longitudinal slot configured to at least partially receive the knife **254**; however, embodiments are envisioned in which only one of the cartridge **230** and the anvil **220** includes a slot configured to receive a cutting member.

Further to the above, referring primarily to FIG. **1**, the handle **110** of the surgical instrument **100** comprises an articulation actuator **170** which, when actuated, can articulate the end effector **200** about an articulation joint **180**. When the actuator **170** is pushed in a first direction, the end effector **200** can be rotated in a first direction and, when the actuator **170** is pushed in a second direction, the end effector **200** can be rotated in a second, or opposite, direction. Referring now to FIG. **2**, the end effector **200** includes an articulation lock plate **182** mounted to the proximal end thereof. In the illustrated embodiment, the lock plate **182** is mounted to the cartridge channel **210** via a pin **184** which extends through apertures **214** defined in the cartridge channel **210** and the lock plate **182**. The shaft **120** can further include a lock movable between a first, engaged, position in which the lock is engaged with the lock plate **182** and a second, or disengaged, position in which the lock is disengaged from the lock plate. When the lock is in its engaged position, the lock can hold the end effector **200** in position. When the lock is in its disengaged position, the end effector **200** can be rotated about the articulation joint **180**. The disclosure of U.S. patent application Ser. No. 14/314,788, entitled ROBOTICALLY-CONTROLLED SHAFT BASED ROTARY DRIVE SYSTEMS FOR SURGICAL INSTRUMENTS, which was filed on Jun. 25, 2014, now U.S. Pat. No. 9,186,143, is incorporated by reference in its entirety. The disclosure of U.S. Patent Application Publication No. 2013/0168435, entitled SURGICAL STAPLING INSTRUMENT WITH AN ARTICULATABLE END EFFECTOR, which was filed on Feb. 26, 2013, now U.S. Pat. No. 9,138,225, is incorporated by reference in its entirety.

Turning now to FIGS. **3** and **4**, the staple cavities **270** of the staple cartridge **200** can be positioned and arranged such that the staples stored in the staple cavities are deployed as part of an extensible staple line. The staple cavities **270** are arranged in a staple cavity array. The staple cavity array comprises a first row of staple cavities **270***a* which removably stores a first row of staples. The first row of staple cavities **270***a* extends along a first longitudinal axis **272***a* adjacent the longitudinal slot **234**. The staple cavity array comprises a second row of staple cavities **270***b* which removably stores a second row of staples. The second row of staple cavities **270***b* extends along a second longitudinal axis **272***b* adjacent the first row of staple cavities **270***a*. The staple cavity array comprises a third row of staple cavities **270***c* which removably stores a third row of staples. The third row of staple cavities **270***c* extends along the second row of staple cavities **270***b*.

Referring again to FIGS. **3** and **4**, the first longitudinal axis **272***a* is parallel, or at least substantially parallel, to the second longitudinal axis **272***b*; however, other arrangements are possible in which the first longitudinal axis **272***a* is not parallel to the second longitudinal axis **272***b*. The second longitudinal axis **272***b* is parallel, or at least substantially parallel, to the third longitudinal axis **272***c*; however, other arrangements are possible in which the second longitudinal axis **272***b* is not parallel to the third longitudinal axis **272***c*. The first longitudinal axis **272***a* is parallel, or at least substantially parallel, to the third longitudinal axis **272***c*; however, other arrangements are possible in which the first longitudinal axis **272***a* is not parallel to the third longitudinal axis **272***c*.

Referring again to FIGS. **3** and **4**, the staple cartridge **230** comprises a first potion of the staple cavity array including a first row **270***a*, a second row **270***b*, and a third row **270***c* on a first side of the longitudinal slot **234** and a second portion of the cavity array including a first row **270***a*, a second row **270***b*, and a third row **270***c* on a second side of the longitudinal slot **234**. The first cavity array portion is a mirror image of the second cavity array portion with respect to the longitudinal slot; however, other arrangements may be utilized.

The staple cartridge **230** is configured to deploy the staple array depicted in FIG. **52**A. The staple cartridge **230** is configured to deploy a first row of staples **280***a* along a first longitudinal axis **282***a*, a second row of staples **280***b* along a second longitudinal axis **282***b*, and a third row of staples **280***c* along a third longitudinal axis **282***c*. In various instances, the staple cartridge **230** is configured to deploy a first row of staples **280***a*, a second row of staples **280***b*, and a third row of staples **280***c* on a first side of a longitudinal incision **284** and a first row of staples **280***a*, a second row of staples **280***b*, and a third row of staples **280***c* on a second side of the longitudinal incision **284**. The first rows of staples **280***a* can be positioned adjacent the longitudinal incision **284** and the third row of staples **280***c* can be positioned furthest away from the longitudinal incision **284**. Each second row of staples **280***b* can be positioned intermediate a first row of staples **280***a* and a third row of staples **280***c*.

Further to the above, the first staples **280***a* are removably stored in the first staple cavities **270***a*, the second staples **280***b* are removably stored in the second staple cavities **270***b*, and the third staples **280***c* are removably stored in the third staple cavities **270***c*. The staple cavities **270***a*-**270***c* are configured and arranged to deploy the staples **280***a*-**280***c* in the arrangement depicted in FIG. **52**A. The first staples **280***a* are oriented at a first angle **274***a* with respect to the longitudinal axis **282***a*. The second staples **280***b* are oriented at a second angle **274***b* with respect to a longitudinal axis **282***b*. The third staples **280***c* are oriented at a third angle **274***c* with respect to the longitudinal axis **282***c*. The first angle **274***a* is different than the second angle **274***b*; however, in other embodiments, the first angle **274***a* and the second angle **274***b* can be the same. The third angle **274***c* is different than the second angle **274***b*; however, in other embodiments, the third angle **274***c* and the second angle **274***b* can be the same. The first angle **274***a* is the same as the third angle **274***c*; however, in other embodiments, the first angle **274***a* and the third angle **274***c* can be different.

Further to the above, the first angle **274***a* can be measured with respect to the first longitudinal axis **282***a*, the second angle **274***b* can be measured with respect to the second longitudinal axis **282***b*, and the third angle **274***c* can be measured with respect to the third longitudinal axis **282***c*. When the first longitudinal axis **282***a*, the second longitudinal axis **282***b*, and/or the third longitudinal axis **282***c* are parallel to one another, the first angle **274***a*, the second angle **274***b*, and/or the third angle **274***c* can be measured with respect to any one of the first longitudinal axis **282***a*, the second longitudinal axis **282***b*, and the third longitudinal axis **282***c*. When the first longitudinal axis **282***a*, the second longitudinal axis **282***b*, and/or the third longitudinal axis **282***c* are parallel to the longitudinal slot **234**, the first angle **274***a*, the second angle **274***b*, and/or the third angle **274***c* can be measured with respect to the longitudinal slot **234**. Correspondingly, when the first longitudinal axis **282***a*, the

second longitudinal axis **282***b*, and/or the third longitudinal axis **282***c* are parallel to the tissue transection **284**, the first angle **274***a*, the second angle **274***b*, and/or the third angle **274***c* can be measured with respect to the tissue transection **284**.

The first staples **280***a*, the second staples **280***b*, and the third staples **280***c* can be positioned and arranged such that they provide laterally-overlapping staple lines. More particularly, referring again to FIG. **52**A, the longitudinal row of second staples **280***b* is positioned laterally with respect to the longitudinal row of first staples **280***a* such that the second staples **280***b* are aligned with the gaps between the first staples **280***a* and, similarly, the longitudinal row of third staples **280***c* is positioned laterally with respect to the longitudinal row of second staples **280***b* such that the third staples **280***c* are aligned with the gaps between the second staples **280***b*. Such an arrangement can limit the flow of blood from the tissue T to the transection **284**.

In the illustrated embodiment, each first staple **280***a* comprises a distal leg **283***a* which is distal with respect to a distal leg **283***b* of an adjacent second staple **280***b* and, in addition, a proximal leg **285***a* which is proximal with respect to the distal leg **283***b*. Similarly, each third staple **280***c* comprises a distal leg **283***c* which is distal with respect to the distal leg **283***b* of the adjacent second staple **280***b* and, in addition, a proximal leg **285***c* which is proximal with respect to the distal leg **283***b*. The second staple **280***b* adjacent the first staple **280***a* and the third staple **280***c* mentioned above comprises a proximal leg **285***b* which is proximal with respect to the proximal leg **285***a* of the first staple **280***a* and the proximal leg **285***c* of the third staple **280***c*. This is but one exemplary embodiment and any suitable arrangement could be utilized.

Further to the above, the first staples **280***a* straddle the first longitudinal axis **282***a*. The distal legs **283***a* of the first staples **280***a* are positioned on one side of the first longitudinal axis **282***a* and the proximal legs **285***a* are positioned on the other side of the first longitudinal axis **282***a*. Stated another way, the legs of the first staples **280***a* are offset with respect to the first longitudinal axis **282***a*. Alternative embodiments are envisioned in which the first staples **280***a* are aligned with or collinear with the first longitudinal axis **282***a*.

The second staples **280***b* straddle the second longitudinal axis **282***b*. The distal legs **283***b* of the second staples **280***b* are positioned on one side of the second longitudinal axis **282***b* and the proximal legs **285***b* are positioned on the other side of the second longitudinal axis **282***b*. Stated another way, the legs of the second staples **280***b* are offset with respect to the second longitudinal axis **282***b*. Alternative embodiments are envisioned in which the second staples **280***b* are aligned with or collinear with the second longitudinal axis **282***b*.

The third staples **280***c* straddle the third longitudinal axis **282***c*. The distal legs **283***c* of the third staples **280***c* are positioned on one side of the third longitudinal axis **282***c* and the proximal legs **285***c* are positioned on the other side of the third longitudinal axis **282***c*. Stated another way, the legs of the third staples **280***c* are offset with respect to the third longitudinal axis **282***c*. Alternative embodiments are envisioned in which the third staples **280***c* are aligned with or collinear with the third longitudinal axis **282***c*.

In certain embodiments, a first staple **280***a* can comprise a proximal leg **285***a* which is aligned with the distal leg **283***b* of an adjacent second staple **280***b*. Similarly, a third staple **280***c* can comprise a proximal leg **285***c* which is aligned with the distal leg **283***b* of an adjacent second staple **280***b*. In various embodiments, a first staple **280***a* can comprise a proximal leg **285***a* which is positioned distally with respect to the distal leg **283***b* of an adjacent second staple **280***b*. Similarly, a third staple **280***c* can comprise a proximal leg **285***c* which is positioned distally with respect to the distal leg **283***b* of an adjacent second staple **280***b*.

The row of second staples **280***b* is bounded by the row of first staples **280***a* and the row of third staples **280***c*. A second staple **280***b* is bounded on one side by a first staple **280***a* and on the other side by a third staple **280***c*. More particularly, a first staple **280***a* is positioned laterally inwardly with respect to the proximal leg **285***b* of a second staple **280***b* and, similarly, a third staple **280***c* is positioned laterally outwardly with respect to the distal leg **283***b* of the second staple **280***b*. As a result, the first staples **280***a* can provide a boundary on one side of the second staples **280***b* and the third staples **280***b* can provide a boundary on the other side of the second staples **280***b*.

A traditional staple array is illustrated in FIG. **52**. This staple array comprises a first row of staples **380***a* positioned along a first longitudinal axis **382***a*, a second row of staples **380***b* positioned along a second longitudinal axis **382***b*, and a third row of staples **380***c* positioned along a third longitudinal axis **382***c* positioned on a first side of an incision **384** in the tissue T. The staples **380***a* are aligned, or at least substantially aligned, with the first longitudinal axis **382***a*; the staples **380***b* are aligned, or at least substantially aligned, with the second longitudinal axis **382***b*; and the staples **380***c* are aligned, or at least substantially aligned, with the third longitudinal axis **382***c*. Stated another way, the first staples **380***a* are not oriented at an angle with respect to the first longitudinal axis **382***a*, the second staples **380***b* are not oriented at an angle with respect to the second longitudinal axis **382***b*, and the third staples **380***c* are not oriented at an angle with respect to the third longitudinal axis **382***c*. This staple array also comprises a first row of staples **380***a* positioned along a first longitudinal axis **382***a*, a second row of staples **380***b* positioned along a second longitudinal axis **382***b*, and a third row of staples **380***c* positioned along a third longitudinal axis **382***c* positioned on a second, or opposite, side of the incision **384**.

When a longitudinal tensile force is applied to the tissue T stapled by the staple array illustrated in FIG. **52**, the tissue will stretch longitudinally. Moreover, in various instances, the staples **380***a*, **380***b*, and **380***c* can translate longitudinally as the tissue is stretched longitudinally. Such an arrangement can be suitable in many circumstances; however, the staples **380***a*, **380***b*, and **380***c* can restrict the stretching and/or movement of the tissue. In some instances, the tissue that has been stapled by the staples **380***a*, **380***b*, and **380***c* may be far less flexible than the adjacent tissue that has not been stapled. Stated another way, the staple array comprising the staples **380***a*, **380***b*, and **380***c* can create a sudden change in the material properties of the tissue. In at least one instance, a large strain gradient can be created within the tissue as a result of the staple array which, in turn, can create a large stress gradient within the tissue.

When the staples **380***a*-**380***c* are ejected from the staple cartridge, the legs of the staples can puncture the tissue T. As a result, the staple legs create holes in the tissue. Various types of tissue are resilient and can stretch around the staple legs as the staple legs pass through the tissue. In various instances, the resiliency of the tissue can permit the tissue to stretch and resiliently return toward the staple legs to reduce or eliminate gaps present between the tissue and the staple legs. Such resiliency can also permit the tissue to stretch when a stretching force is applied to the tissue; however,

such resiliency can be inhibited by certain staple patterns. In at least one instance, the staple pattern depicted in FIG. **52** can inhibit the longitudinal stretching of the tissue. When a longitudinal stretching force is applied to the tissue stapled by the staple pattern of FIG. **52**, the tissue may begin to pull away from the staple legs and create gaps therebetween. In some instances, especially in bariatric resection applications, such gaps can result in increased bleeding from the stomach tissue. In certain instances, especially in lung resection applications, air leaks can result in the lung tissue.

The staple array depicted in FIG. **52**A is more flexible than the staple array depicted in FIG. **52**. When a longitudinal tensile force is applied to the tissue T, referring now to FIG. **52**B, the staples **280***a*, **280***b*, and **280***c* can, one, translate longitudinally as the tissue is stretched longitudinally and/or, two, rotate as the tissue is stretched longitudinally. The compliant staple array depicted in FIG. **52** can create significant extensibility along the staple lines, such as in the longitudinal direction defined by the staple lines, for example. Such longitudinal extensibility can reduce the stress and/or strain gradient within the stapled tissue T and/or the tissue T surrounding the stapled tissue T. Moreover, the compliant staple array depicted in FIG. **52**A can reduce or eliminate the gaps between the staple legs and the tissue T when a longitudinal stretching force is applied to the tissue and, as a result, reduce the bleeding and/or air leaks between the staple legs and the tissue.

With regard to the longitudinal translation of the staples **280***a*, **280***b*, and **280***c*, the first staples **280***a* can move along the first longitudinal axis **282***a*, the second staples **280***b* can move along the second longitudinal axis **282***b*, and the third staples **280***c* can move along the third longitudinal axis **282***c*. When the first staples **280***a* move along the first longitudinal axis **282***a*, the first staples **280***a* can spread out across the first longitudinal axis **282***a*. Stated another way, the distance between the first staples **280***a*, or gap distance, can increase when a longitudinal force is applied to the tissue along, and/or parallel to, the first longitudinal axis **282***a*. Similarly, the second staples **280***b* can spread out across the second longitudinal axis **282***b* when the second staples **280***b* move along the second longitudinal axis **282***b*. The distance between the second staples **280***b*, or gap distance, can increase when a longitudinal force is applied to the tissue along, and/or parallel to, the second longitudinal axis **282***b*. Also, similarly, the third staples **280***c* can spread out across the third longitudinal axis **282***c* when the third staples **280***c* move along the third longitudinal axis **282***c*. The distance between the third staples **280***c*, or gap distance, can increase when a longitudinal force is applied to the tissue along, and/or parallel to, the third longitudinal axis **282***c*.

As discussed above, the staples **280***a*, **280***b*, and/or **280***c* can move with the tissue T when the tissue T is stretched. When the tissue T is pulled longitudinally, further to the above, the first longitudinal axis **282***a*, the second longitudinal axis **282***b*, and/or the third longitudinal axis **282***c* can remain parallel to one another. In some instances, the orientation of the first longitudinal axis **282***a*, the second longitudinal axis **282***b*, and/or the third longitudinal axis **282***c* can become non-parallel, such as when a transverse force, i.e., a force which is transverse to the longitudinal force, is applied to the tissue T, for example. In certain instances, the first longitudinal axis **282***a*, the second longitudinal axis **282***b*, and/or the third longitudinal axis **282***c* can move closer to each other when the tissue T is pulled longitudinally. Such movement can be the result of transverse contraction that occurs within the tissue T when a longitudinal stretching force is applied to the tissue T. In some instances, the first longitudinal axis **282***a*, the second longitudinal axis **282***b*, and/or the third longitudinal axis **282***c* can move away from each other, such as when a transverse force is applied to the tissue T, for example.

With regard to the rotational movement of the staples **280***a*, **280***b*, and **280***c*, the first staples **280***a* can rotate with respect to the first longitudinal axis **282***a* when a longitudinal tensile force is applied to the tissue T. Each first staple **280***a* can rotate between an initial first angle **274***a* and another first angle **274***a* when a longitudinal tensile force is applied to the tissue T. In at least one instance, each first staple **280***a* can rotate between an initial orientation in which the first staple **280***a* extends in a transverse direction to the first longitudinal axis **282***a* and another orientation which is closer to being aligned with the first longitudinal axis **282***a*. In some instances, the application of a longitudinal tensile force to the tissue T can cause the first staples **280***a* to rotate into an orientation which is collinear with the first longitudinal axis **282***a*. In various instances, each first staple **280***a* can rotate about an axis extending through the first longitudinal axis **282***a*.

As discussed above, a first staple **280***a* can rotate between an initial first angle **274***a* and another first angle **274***a* when a longitudinal tensile force is applied to the tissue T. In various embodiments, the initial, or unstretched, first angle **274***a* can be between approximately 5 degrees and approximately 85 degrees, for example. In certain embodiments, the initial, or unstretched, first angle **274***a* can be between approximately 30 degrees and approximately 60 degrees, for example. In at least one embodiment, the initial, or unstretched, first angle **274***a* can be approximately 45 degrees, for example. In at least one embodiment, the initial, or unstretched, first angle **274***a* can be approximately 10 degrees, approximately 20 degrees, approximately 30 degrees, approximately 40 degrees, approximately 50 degrees, approximately 60 degrees, approximately 70 degrees, and/or approximately 80 degrees, for example.

In various instances, the stretched first angle **274***a* can be between approximately 5 degrees and approximately 85 degrees, for example. In certain instances, the stretched first angle **274***a* can be between approximately 30 degrees and approximately 60 degrees, for example. In at least one instance, the stretched first angle **274***a* can be approximately 45 degrees, for example. In at least one instance, the stretched first angle **274***a* can be approximately 10 degrees, approximately 20 degrees, approximately 30 degrees, approximately 40 degrees, approximately 50 degrees, approximately 60 degrees, approximately 70 degrees, and/or approximately 80 degrees, for example.

In various instances, the difference between the unstretched first angle **274***a* and the stretched first angle **274***a* can be between approximately 1 degree and approximately 45 degrees, for example. In certain instances, the difference between the unstretched first angle **274***a* and the stretched first angle **274***a* can be approximately 1 degree, approximately 2 degrees, approximately 3 degrees, approximately 4 degrees, and/or approximately 5 degrees, for example. In certain instances, the difference between the unstretched first angle **274***a* and the stretched first angle **274***a* can be approximately 5 degrees, approximately 10 degrees, approximately 15 degrees, approximately 20 degrees, and/or approximately 25 degrees, for example.

Further to the above, the second staples **280***b* can rotate with respect to the second longitudinal axis **282***b* when a longitudinal tensile force is applied to the tissue T. Each second staple **280***b* can rotate between an initial second

angle **274***b* and another second angle **274***b* when a longitudinal tensile force is applied to the tissue T. In at least one instance, each second staple **280***b* can rotate between an initial orientation in which the second staple **280***b* extends in a transverse direction to the second longitudinal axis **282***b* and another orientation which is closer to being aligned with the second longitudinal axis **282***b*. In some instances, the application of a longitudinal tensile force to the tissue T can cause the second staples **280***b* to rotate into an orientation which is collinear with the second longitudinal axis **282***b*. In various instances, each second staple **280***b* can rotate about an axis aligned with and/or extending through the second longitudinal axis **282***b*.

As discussed above, a second staple **280***b* can rotate between an initial second angle **274***b* and another second angle **274***b* when a longitudinal tensile force is applied to the tissue T. In various embodiments, the initial, or unstretched, second angle **274***b* can be between approximately 5 degrees and approximately 85 degrees, for example. In certain embodiments, the initial, or unstretched, second angle **274***b* can be between approximately 30 degrees and approximately 60 degrees, for example. In at least one embodiment, the initial, or unstretched, second angle **274***b* can be approximately 45 degrees, for example. In at least one embodiment, the initial, or unstretched, second angle **274***b* can be approximately 10 degrees, approximately 20 degrees, approximately 30 degrees, approximately 40 degrees, approximately 50 degrees, approximately 60 degrees, approximately 70 degrees, and/or approximately 80 degrees, for example.

In various instances, the stretched second angle **274***b* can be between approximately 5 degrees and approximately 85 degrees, for example. In certain instances, the stretched second angle **274***b* can be between approximately 30 degrees and approximately 60 degrees, for example. In at least one instance, the stretched second angle **274***b* can be approximately 45 degrees, for example. In at least one instance, the stretched second angle **274***b* can be approximately 10 degrees, approximately 20 degrees, approximately 30 degrees, approximately 40 degrees, approximately 50 degrees, approximately 60 degrees, approximately 70 degrees, and/or approximately 80 degrees, for example.

In various instances, the difference between the unstretched second angle **274***b* and the stretched second angle **274***b* can be between approximately 1 degree and approximately 45 degrees, for example. In certain instances, the difference between the unstretched second angle **274***b* and the stretched second angle **274***b* can be approximately 1 degree, approximately 2 degrees, approximately 3 degrees, approximately 4 degrees, and/or approximately 5 degrees, for example. In certain instances, the difference between the unstretched second angle **274***b* and the stretched second angle **274***b* can be approximately 5 degrees, approximately 10 degrees, approximately 15 degrees, approximately 20 degrees, and/or approximately 25 degrees, for example.

Further to the above, the third staples **280***c* can rotate with respect to the third longitudinal axis **282***c* when a longitudinal tensile force is applied to the tissue T. Each third staple **280***c* can rotate between an initial third angle **274***c* and another third angle **274***c* when a longitudinal tensile force is applied to the tissue T. In at least one instance, each third staple **280***c* can rotate between an initial orientation in which the third staple **280***c* extends in a transverse direction to the third longitudinal axis **282***c* and another orientation which is closer to being aligned with the third longitudinal axis **282***c*. In some instances, the application of a longitudinal tensile force to the tissue T can cause the third staples **280***c* to rotate into an orientation which is collinear with the third longitudinal axis **282***c*. In various instances, each third staple **280***c* can rotate about an axis aligned with and/or extending through the third longitudinal axis **282***c*.

As discussed above, a third staple **280***c* can rotate between an initial third angle **274***c* and another third angle **274***c* when a longitudinal tensile force is applied to the tissue T. In various embodiments, the initial, or unstretched, third angle **274***c* can be between approximately 5 degrees and approximately 85 degrees, for example. In certain embodiments, the initial, or unstretched, third angle **274***c* can be between approximately 30 degrees and approximately 60 degrees, for example. In at least one embodiment, the initial, or unstretched, third angle **274***c* can be approximately 45 degrees, for example. In at least one embodiment, the initial, or unstretched, third angle **274***c* can be approximately 10 degrees, approximately 20 degrees, approximately 30 degrees, approximately 40 degrees, approximately 50 degrees, approximately 60 degrees, approximately 70 degrees, and/or approximately 80 degrees, for example.

In various instances, the stretched third angle **274***c* can be between approximately 5 degrees and approximately 85 degrees, for example. In certain instances, the stretched third angle **274***c* can be between approximately 30 degrees and approximately 60 degrees, for example. In at least one instance, the stretched third angle **274***c* can be approximately 45 degrees, for example. In at least one instance, the stretched third angle **274***c* can be approximately 10 degrees, approximately 20 degrees, approximately 30 degrees, approximately 40 degrees, approximately 50 degrees, approximately 60 degrees, approximately 70 degrees, and/or approximately 80 degrees, for example.

In various instances, the difference between the unstretched third angle **274***c* and the stretched third angle **274***c* can be between approximately 1 degree and approximately 45 degrees, for example. In certain instances, the difference between the unstretched third angle **274***c* and the stretched third angle **274***c* can be approximately 1 degree, approximately 2 degrees, approximately 3 degrees, approximately 4 degrees, and/or approximately 5 degrees, for example. In certain instances, the difference between the unstretched third angle **274***c* and the stretched third angle **274***c* can be approximately 5 degrees, approximately 10 degrees, approximately 15 degrees, approximately 20 degrees, and/or approximately 25 degrees, for example.

In various instances, the first staples **280***a* in the first row of staples can rotate a first amount and the second staples **280***b* in the second row of staples can rotate a second amount which is different than the first amount. The first amount can be less than or more than the second amount. In various instances, the first staples **280***a* in the first row of staples can rotate a first amount and the third staples **280***c* in the third row of staples can rotate a third amount which is different than the first amount. The first amount can be less than or more than the third amount. In various instances, the third staples **280***c* in the third row of staples can rotate a third amount and the second staples **280***b* in the second row of staples can rotate a second amount which is different than the third amount. The third amount can be less than or more than the second amount.

In at least one application, it may be desirable for the innermost rows of staples, i.e., the row of staples closest to the incision, to be more inflexible, or inextensible, than the other rows of staples. It may also be desirable for the outermost rows of staples, i.e., the row of staples furthest away from the incision, to be more flexible, or extensible,

than the other rows of staples. When the angle between the first staple axes and the first longitudinal axis is smaller than the angle between the second staple axes and the second longitudinal axis, the first staples may have less room to rotate toward the first longitudinal axis than the second staples have to rotate toward the second longitudinal axis and, thus, may stiffen the tissue more than the second staples. Similarly, when the angle between the second staple axes and the second longitudinal axis is smaller than the angle between the third staple axes and the third longitudinal axis, the second staples may have less room to rotate toward the second longitudinal axis than the third staples have to rotate toward the third longitudinal axis and, thus, may stiffen the tissue more than the third staples

Further to the above, the staple pattern disclosed in FIG. **52**A comprises six longitudinal rows of staples. Other embodiments are envisioned which comprise less than six rows of staples, such as four rows of staples, for example, or more than six rows of staples, such as eight rows of staples, for example.

The first staples **280***a*, the second staples **280***b*, and the third staples **280***c* can comprise any suitable configuration such as, for example, a V-shaped configuration or a U-shaped configuration. A staple comprising a V-shaped configuration can include a base, a first leg extending from a first end of the base, and a second leg extending from a second end of the base, wherein the first leg and the second leg extend in directions which are non-parallel to one another. A staple comprising a U-shaped configuration can include a base, a first leg extending from a first end of the base, and a second leg extending from a second end of the base, wherein the first leg and the second leg extend in directions which are parallel to one another.

With regard to the staple pattern disclosed in FIG. **52**A, for example, each first staple **280***a* comprises a proximal staple leg **285***a* and a distal staple leg **283***a*. A staple cartridge configured to deploy the staple pattern disclosed in FIG. **52**A can include a proximal end and a distal end. The proximal staple leg **285***a* can be closer to the proximal end of the staple cartridge than the distal staple leg **283***a* and, similarly, the distal staple leg **283***a* can be closer to the distal end of the staple cartridge than the proximal staple leg **285***a*. The base of each first staple **280***a* can define a first base axis. The proximal staple leg **285***a* and the distal staple leg **283***a* can extend from the first base axis. The first staples **280***a* can be positioned and arranged such that the first base axes extend toward the longitudinal cut line **284** and toward the distal end of the staple cartridge.

With regard to the staple pattern disclosed in FIG. **52**A, for example, each second staple **280***b* comprises a proximal staple leg **285***b* and a distal staple leg **283***b*. As discussed above, a staple cartridge configured to deploy the staple pattern disclosed in FIG. **52**A can include a proximal end and a distal end. The proximal staple leg **285***b* can be closer to the proximal end of the staple cartridge than the distal staple leg **283***b* and, similarly, the distal staple leg **283***b* can be closer to the distal end of the staple cartridge than the proximal staple leg **285***b*. The base of each second staple **280***b* can define a second base axis. The proximal staple leg **285***b* and the distal staple leg **283***b* can extend from the second base axis. The second staples **280***b* can be positioned and arranged such that the second base axes extend toward the longitudinal cut line **284** and toward the proximal end of the staple cartridge.

With regard to the staple pattern disclosed in FIG. **52**A, for example, each third staple **280***c* comprises a proximal staple leg **285***c* and a distal staple leg **283***c*. As discussed above, a staple cartridge configured to deploy the staple pattern disclosed in FIG. **52**A can include a proximal end and a distal end. The proximal staple leg **285***c* can be closer to the proximal end of the staple cartridge than the distal staple leg **283***c* and, similarly, the distal staple leg **283***c* can be closer to the distal end of the staple cartridge than the proximal staple leg **285***c*. The base of each third staple **280***c* can define a third base axis. The proximal staple leg **285***c* and the distal staple leg **283***c* can extend from the third base axis. The third staples **280***c* can be positioned and arranged such that the third base axes extend toward the longitudinal cut line **284** and toward the distal end of the staple cartridge.

With regard to the staple pattern disclosed in FIG. **52**A, for example, the first staples **280***a* can be aligned with the third staples **280***c*. The proximal staple leg **285***a* of a first staple **280***a* can be aligned with the proximal staple leg **285***c* of a third staple **280***c*. When the proximal staple leg **285***a* is aligned with the proximal staple leg **285***c*, the proximal staple leg **285***a* and the proximal leg **285***c* can be positioned along an axis which is perpendicular to the cut line **284**. The distal staple leg **283***a* of the first staple **280***a* can be aligned with the distal staple leg **283***c* of the third staple **280***c*. When the distal staple leg **283***a* is aligned with the distal staple leg **283***c*, the distal staple leg **283***a* and the distal staple leg **283***c* can be positioned along an axis which is perpendicular to the cut line **284**. In such circumstances, the third staple **280***c* can seal the tissue in the event that the first staple **280***a* is malformed. Similarly, the first staple **280***a* can hold the tissue together in the event that the third staple **280***c* is malformed. In other embodiments, the first staples **280***a* may not be aligned with the third staples **280***c*.

Further to the above, the first staples **280***a* can be aligned with the third staples **280***c* when the staple pattern is in an unstretched condition. When the staple pattern is stretched longitudinally, the first staples **280***a* and/or the third staples **280***c* can translate and/or rotate. In various circumstances, the first staples **280***a* can remain aligned with the third staples **280***c* when the tissue is stretched longitudinally. In other circumstances, the first staples **280***a* may not remain aligned with the third staples **280***c*.

With regard to the staple pattern disclosed in FIG. **52**A once again, the distal staple leg **283***b* of a second staple **280***b* can be aligned with the proximal staple leg **285***a* of a first staple **280***a* and/or the proximal leg **285***c* of a third staple **280***c*. The distal staple leg **283***b* of the second staple **280***b*, the proximal staple leg **285***a* of the first staple **280***a*, and/or the proximal staple leg **285***c* of the third staple **280***c* can be positioned along an axis which is perpendicular to the cut line **284**. The proximal staple leg **285***b* of a second staple **280***b* can be aligned with the distal staple leg **283***a* of a first staple **280***a* and/or the distal staple leg **283***c* of a third staple **280***c*. The proximal staple leg **285***b* of the second staple **280***b*, the distal staple leg **283***a* of the first staple **280***a*, and/or the distal staple leg **283***c* of the third staple **280***c* can be positioned along an axis which is perpendicular to the cut line **284**.

Further to the above, the staple legs of the second staples **280***b* can be aligned with the staple legs of the first staples **280***a* and/or the third staples **280***c* when the staple pattern is in an unstretched condition. When the staple pattern is stretched longitudinally, the first staples **280***a*, the second staples **280***b*, and/or the third staples **280***c* can translate and/or rotate. In various circumstances, the legs of the second staples **280***b* may not remain aligned with the legs of the first staples **280***a* and/or the third staples **280***c* when the tissue is stretched longitudinally. In other circumstances, the legs of the second staples **280***b* can remain aligned with the

legs of the first staples **280***a* and/or the third staples **280***c* when the tissue is stretched longitudinally.

In various embodiments, a staple pattern can be arranged such that the staples in one longitudinal staple row overlap with the staples in another longitudinal staple row. For instance, the distal staple leg **283***b* of a second staple **280***b* can be positioned distally with respect to the proximal staple leg **285***a* of a first staple **280***a* and/or the proximal leg **285***c* of a third staple **280***c*. For instance, the proximal staple leg **285***b* of a second staple **280***b* can be positioned proximally with the distal staple leg **283***a* of a first staple **280***a* and/or the distal staple leg **283***c* of a third staple **280***c*. The proximal staple leg **285***b* of the second staple **280***b*, the distal staple leg **283***a* of the first staple **280***a*, and/or the distal staple leg **283***c* of the third staple **280***c* can be positioned along an axis which is perpendicular to the cut line **284**.

As discussed above, the second staples **280***b* can overlap with the first staples **280***a* and/or the third staples **280***c* when the staple pattern is in an unstretched condition. When the staple pattern is stretched longitudinally, the first staples **280***a*, the second staples **280***b*, and/or the third staples **280***c* can translate and/or rotate. In various circumstances, the second staples **280***b* can remain overlapped with the first staples **280***a* and/or the third staples **280***c* when the tissue is stretched longitudinally. In some circumstances, the second staples **280***b* may no longer be overlapped with the first staples **280***a* and/or the third staples **280***c* when the tissue is stretched longitudinally.

The staple pattern depicted in FIG. **52**A is depicted in an unstretched condition. When the tissue stapled by the staple pattern depicted in FIG. **52**A is stretched longitudinally, the staples can move longitudinally with the tissue and/or rotate within the tissue, as illustrated in FIG. **52**B. Such movement is also illustrated in FIG. **24**.

The surgical instrument **100** is configured to be used during a laparoscopic surgical procedure. The end effector **200** and the shaft **120** are sized and dimensioned to be inserted through a trocar, or cannula, into a patient. The trocar can comprise an inner passage comprising an inner diameter. In some instances, the inner diameter can be approximately 5 mm or approximately 12 mm, for example. The end effector **200** is a linear end effector that applies staples along straight lines. Other surgical instruments are envisioned which apply staples along at least partially curved lines, such as those disclosed in U.S. Pat. No. 8,827,133, entitled SURGICAL STAPLING DEVICE HAVING SUPPORTS FOR A FLEXIBLE DRIVE MECHANISM, which issued on Sep. 9, 2014, for example. The entire disclosure of U.S. Pat. No. 8,827,133, entitled SURGICAL STAPLING DEVICE HAVING SUPPORTS FOR A FLEXIBLE DRIVE MECHANISM, which issued on Sep. 9, 2014, is incorporated by reference in its entirety. Such surgical instruments could be adapted to apply curved expandable staple lines utilizing the principles disclosed herein. While the surgical instrument **100** is adapted to be used during laparoscopic surgical procedures, the surgical instrument **100** could be utilized during an open surgical procedure where the surgical instrument **100** is inserted through a large incision in the patient. Moreover, the expandable staple lines disclosed herein could be applied by an open surgical stapler, such as those disclosed in U.S. Patent Application Publication No. 2014/0042205, entitled SURGICAL STAPLING INSTRUMENT, which was filed on Oct. 21, 2013, now U.S. Pat. No. 9,687,231, for example. The disclosure of U.S. Patent Application Publication No. 2014/0042205, entitled SURGICAL STAPLING INSTRUMENT, which was filed on Oct. 21, 2013, now U.S. Pat. No. 9,687,231, is incorporated by reference herein in its entirety.

Turning now to FIG. **4**, the anvil **220** includes an array of forming pockets **290***a*, **290***b*, and **290***c* defined therein configured to deform the staples **280***a*, **280***b*, and **280***c*, respectively. The first forming pockets **290***a* are positioned along a first longitudinal axis **292***a*, the second longitudinal pockets **290***b* are positioned along a second longitudinal axis **292***b*, and the third forming pockets **290***c* are positioned along a third longitudinal axis **292***c*. The longitudinal axes **292***a*, **292***b*, and **292***c* are parallel and extend between a proximal end **221** and a distal end **222** of the anvil **220**. The anvil **220** further comprises a longitudinal slot **224** defined therein configured to receive at least a portion of a firing member. In at least one instance, the firing member includes a cutting portion that extends between the anvil **220** and the staple cartridge **230**. The anvil **220** comprises a row of first forming pockets **290***a*, a row of second forming pockets **290***b*, and a row of third forming pockets **290***c* on one side of the longitudinal slot **224** and another row of first forming pockets **290***a*, row of second forming pockets **290***b*, and row of third forming pockets **290***c* on the other side of the longitudinal slot **224**. As the reader will appreciate, the forming pockets **290***a*, **290***b*, and **290***c* are aligned with and correspond to the staple cavities **270***a*, **270***b*, and **270***c*, respectively, defined in the staple cartridge **230**.

The forming pockets **290***a*, **290***b*, and **290***c* are configured to deform the staples **280***a*, **280***b*, and **280***c* into a B-shaped configuration, for example. In various instances, the forming pockets **290***a*, **290***b*, and **290***c* are configured to deform U-shaped staples and/or V-shaped staples, for example, into such a B-shaped configuration. Each forming pocket **290***a*, **290***b*, and **290***c* comprises a proximal end configured to receive a proximal leg of a staple and a distal end configured to receive the distal leg of the staple. That said, any suitable anvil can be utilized to form the staples ejected from a staple cartridge into any suitable shape. Each forming pocket **290***a*, **290***b*, and **290***c* can comprise a groove extending between the proximal end and the distal end thereof. The groove can include sidewalls configured to deform a staple within a plane and prevent, or at least limit, the movement of the staple legs out of that plane as the staple legs are deformed.

Turning now to FIG. **5**, an anvil **320** comprises an array of forming pockets **390***a*, **390***b*, and **390***c* defined therein. Similar to the above, a plurality of first forming pockets **390***a* are arranged along a first longitudinal axis, a plurality of second forming pockets **390***b* are arranged along a second longitudinal axis, and a plurality of third forming pockets **390***c* are arranged along a third longitudinal axis. Each forming pocket **390***a*, **390***b*, and **390***c* includes a proximal forming pocket end and a distal forming pocket end. For example, each first forming pocket **390***a* includes a proximal end **393***a* configured to receive a proximal leg of a first staple and a distal end **395***a* configured to receive a distal leg of the first staple, each second forming pocket **390***b* includes a proximal end **393***b* configured to receive a proximal leg of a second staple and a distal end **395***b* configured to receive a distal leg of the second staple, and each forming pocket **390***c* includes a proximal end **393***c* configured to receive a proximal leg of a third staple and a distal end **395***c* configured to receive a distal leg of the third staple.

The proximal ends **393***a*, **393***b*, and **393***c* and the distal ends **395***a*, **395***b*, and **395***c* can comprise any suitable configuration. Referring again to FIG. **5**, the proximal ends **393***a*, **393***b*, and **393***c* and the distal ends **395***a*, **395***b*, and **395***c* each comprise an enlarged cup. The enlarged cups are wider than a groove **397** defined therebetween. In certain

instances, the enlarged cups and the groove extending therebetween can comprise an hourglass shape, for example. When the legs of a staple enter such a forming pocket, the legs can enter the enlarged cups and, as the staple legs are deformed, the enlarged cups can guide the staple legs into the groove **397**. Each enlarged cup can include curved and/or angled sidewalls which can be configured to guide a staple leg toward the groove **397**. The enlarged cups can, in certain instances, adjust the orientation of a misaligned staple leg.

The staple forming pockets **390***a*, **390***b*, and **390***c* are nested. For instance, the distal enlarged cup **395***b* of a second forming pocket **390***b* is positioned intermediate the enlarged cups **393***c*, **395***c* of an adjacent third staple forming pocket **390***c* and, additionally, the proximal enlarged cup **393***b* of a second forming pocket **390***b* is positioned intermediate the enlarged cups **393***a*, **395***a* of an adjacent first forming pocket **390***a*. Also, for instance, the proximal enlarged cup **393***a* of a first forming pocket **390***a* is positioned intermediate the enlarged cups **393***b*, **395***b* of an adjacent second forming pocket **390***b*. Additional, for instance, the distal enlarged cup **395***c* of a third forming pocket **390***c* is positioned intermediate the enlarged cups **393***b*, **395***b* of an adjacent second forming pocket **390***b*. The enlarged forming cups of each staple cavity can define a rectangular perimeter within which the entire forming pocket can be positioned. As a result of the nesting arrangement described above, the rectangular perimeter of one staple forming cavity can overlap the rectangular perimeter of another forming cavity. For instance, the rectangular perimeter of a second forming cavity **390***b* can overlap the rectangular perimeter of a first forming cavity **390***a* and/or the rectangular perimeter of a third forming cavity **390***c*.

Turning now to FIG. **6**, an anvil **420** comprises an array of forming pockets **490***a*, **490***b*, and **490***c* defined therein. Similar to the above, a plurality of first forming pockets **490***a* are arranged along a first longitudinal axis, a plurality of second forming pockets **490***b* are arranged along a second longitudinal axis, and a plurality of third forming pockets **490***c* are arranged along a third longitudinal axis. Each forming pocket **490***a*, **490***b*, and **490***c* includes a proximal forming pocket end and a distal forming pocket end. For example, each first forming pocket **490***a* includes a proximal end **493***a* configured to receive a proximal leg of a first staple and a distal end **495***a* configured to receive a distal leg of the first staple, each second forming pocket **490***b* includes a proximal end **493***b* configured to receive a proximal leg of a second staple and a distal end **495***b* configured to receive a distal leg of the second staple, and each forming pocket **490***c* includes a proximal end **493***c* configured to receive a proximal leg of a third staple and a distal end **495***c* configured to receive a distal leg of the third staple.

The proximal ends **493***a*, **493***b*, and **493***c* and the distal ends **495***a*, **495***b*, and **495***c* can comprise any suitable configuration. Referring again to FIG. **6**, the proximal ends **493***a*, **493***b*, and **493***c* and the distal ends **495***a*, **495***b*, and **495***c* each comprise an enlarged cup. The enlarged cups are wider than a groove **497** defined therebetween. In certain instances, the enlarged cups and the groove extending therebetween can comprise an hourglass shape, for example. When the legs of a staple enter such a forming pocket, the legs can enter the enlarged cups and, as the staple legs are deformed, the enlarged cups can guide the staple legs into the groove **497**. Each enlarged cup can include curved and/or angled sidewalls which can be configured to guide a staple leg toward the groove **497**. The enlarged cups can, in certain instances, adjust the orientation of a misaligned staple leg.

The staple forming pockets **490***a*, **490***b*, and **490***c* are nested. For instance, the distal enlarged cup **495***b* of a second forming pocket **490***b* is positioned intermediate the enlarged cups **493***c*, **495***c* of an adjacent third staple forming pocket **490***c* and, additionally, the proximal enlarged cup **493***b* of a second forming pocket **490***b* is positioned intermediate the enlarged cups **493***a*, **495***a* of an adjacent first forming pocket **490***a*. Also, for instance, the proximal enlarged cup **493***a* of a first forming pocket **490***a* is positioned intermediate the enlarged cups **493***b*, **495***b* of an adjacent second forming pocket **490***b*. Additional, for instance, the distal enlarged cup **495***c* of a third forming pocket **490***c* is positioned intermediate the enlarged cups **493***b*, **495***b* of an adjacent second forming pocket **490***b*. The enlarged forming cups of each staple cavity can define a rectangular perimeter within which the entire forming pocket can be positioned. As a result of the nesting arrangement described above, the rectangular perimeter of one staple forming cavity can overlap the rectangular perimeter of another forming cavity. For instance, the rectangular perimeter of a second forming cavity **490***b* can overlap the rectangular perimeter of a first forming cavity **490***a* and/or the rectangular perimeter of a third forming cavity **490***c*.

Referring again to FIG. **52**A, the staples **280***a*, **280***b*, and **280***c* do not overlap. Other embodiments are envisioned in which at least some of the staples in a staple pattern overlap. Turning now to FIG. **32**, a staple pattern disclosed therein comprises a first row of longitudinal staples **580***a* and a second row of longitudinal staples **580***b*. As the reader will appreciate, some of the staples **580***a* in the first row and the staples **580***b* in the second row are overlapped. In at least one instance, the base of a second staple **580***b* extends under the base of a first staple **580***a*. In such an instance, the distal leg **585***b* of the second staple **580***b* is positioned on one side of the base of the first staple **580***a* and the proximal leg **583***b* of the second staple **580***b* is positioned on the other side of the base of the first staple **580***a*. Similarly, in at least one instance, the base of a first staple **580***a* extends under the base of a second staple **580***b*. In such an instance, the distal leg **585***a* of the first staple **580***a* is positioned on one side of the base of the second staple **580***b* and the proximal leg **583***a* of the first staple **580***a* is positioned on the other side of the base of the second staple **580***b*. As a result of the above, the first staples **580***a* are interweaved with the second staples **580***b*.

Referring again to FIG. **32**, the staple pattern comprises a first row of staples **580***a* and a second row of staples **580***b* positioned on one side of a longitudinal tissue incision and a first row of staples **580***a* and a second row of staples **580***b* positioned on the other side of the longitudinal tissue incision. The first staples **580***a* are oriented distally and toward the longitudinal tissue incision and the second staples **580***b* are oriented proximally and toward the longitudinal tissue incision.

Referring again to FIG. **32**, the first row of staples **580***a* is positioned along a first longitudinal axis and the second row of staples **580***b* is positioned along the second longitudinal axis. As a result of the overlap between the first staples **580***a* and the second staples **580***b*, the first longitudinal axis can be adjacent the second longitudinal axis, in certain instances. In some instances, the overlap between a first row of staples and a second row of staples can permit angled staples in these rows of staples to have the same centerline spacing that can be achieved with traditional, longitudinally-

arranged staple patterns, such as the staple pattern illustrated in FIG. **52**, for example. In some instances, the overlap between a first row of staples and a second row of staples can permit angled staples in these rows of staples to have a closer centerline spacing than can be achieved with traditional, longitudinally-arranged staple patterns. In at least one embodiment, the first longitudinal axis can be collinear with the second longitudinal axis.

The staple pattern depicted in FIG. **32** comprises a repeating pattern. The repeating pattern comprises two first staples **580***a* followed by two second staples **580***b* followed by two first staples **580***a* followed by two second staples **580***b*, and so forth. This repeating pattern extends longitudinally in the proximal-distal direction. The first row of staples **580***a* has breaks therein which are filled by staples **580***b* and, similarly, the second row of staples **580***b* has breaks therein which are filled by staples **580***a*. A repeating pattern is present on one side of the longitudinal incision and a repeating pattern is present on the other side of the longitudinal incision. These repeating patterns are mirror-images of one another. Other repeating patterns are contemplated.

A staple cartridge **530** configured to removably store and deploy the staple pattern disclosed in FIG. **32** is illustrated in FIG. **33**. The staple cartridge **530** includes a first row of staple cavities **570***a* for removably storing the first staples **580***a* and a second row of staple cavities **570***b* for removably storing the second staples **580***b*. At least some of the first staple cavities **570***a* and the second staple cavities **570***b* are interconnected to removably store the overlapping first staples **580***a* and second staples **580***b*. A first row of staple cavities **570***a* can be arranged along a first longitudinal axis and a row of second staple cavities **570***b* can be arranged along a second longitudinal axis. The first longitudinal axis and the second longitudinal axis can be adjacent or collinear, as appropriate, in order to deploy the staple patterns disclosed herein. A first row of staple cavities **570***a* and a second row of staple cavities **570***b* are positioned on a first side of a longitudinal slot **534** and a first row of staple cavities **570***a* and a second row of staple cavities **570***b* are positioned on a second side of the longitudinal slot **534**. The longitudinal slot **534** is configured to receive a firing member. The firing member can include a cutting element, such as a knife, for example.

An anvil **520** configured to deform the staples of the staple pattern disclosed in FIG. **32** is illustrated in FIG. **34**. The anvil **520** includes a repeating pattern of forming cavities including first forming cavities **590***a* configured to deform the legs of the first staples **580***a* and second forming cavities **590***b* configured to deform the legs of the second staples **580***b*. The first forming cavities **590***a* and the second forming cavities **590***b* are arranged in an alternating pattern. The alternating pattern comprises arrays of first forming cavities **590***a* and second forming cavities **590***b* positioned along a first longitudinal axis and arrays of first forming cavities **590***a* and second forming cavities **590***b* positioned along a second longitudinal axis which are positioned on one side of a longitudinal slot **524**. The alternating pattern further comprises arrays of first forming cavities **590***a* and second forming cavities **590***b* positioned along a first longitudinal axis and arrays of first forming cavities **590***a* and second forming cavities **590***b* positioned along a second longitudinal axis which are positioned on the other side of the longitudinal slot **524**. The arrays of forming cavities **590***a*, **590***b* can define a mirror image with respect to the longitudinal slot **524**. The longitudinal slot **524** is configured to receive a firing member. The firing member can include a cutting element, such as a knife, for example.

The staple pattern depicted in FIG. **32** comprises two rows of staples on each side of the longitudinal tissue incision; however, such a staple pattern could include more than two rows of staples, such as three rows of staples, for example. Such a third row of staples could be interweaved with the first row of staples **580***a* and/or the second row of staples **580***b*. Alternatively, such a third row of staples may not be interweaved with either the first row of staples **580***a* or the second row of staples **580***b*. In such an embodiment, the first row of staples **580***a* and the second row of staples **580***b* can be interweaved and the third row of staples could be adjacent the first row of staples **580***a* and/or the second row of staples **580***b*, for example.

The staple pattern depicted in FIG. **35** includes a longitudinal row of first staples **680***a*, a longitudinal row of second staples **680***b*, and a longitudinal row of third staples **6870***c*. The first staples **680***a* have a first base width. The second staples **680***b* have a second base width. The third staples **680***c* have a third base width. The width of a staple base can be defined as the distance between a first staple leg extending from the base and a second staple leg extending from the base measured along the base extending between the first staple leg and the second staple leg. In at least one instance, the base width is measured between the cross-sectional center of the first staple leg and the cross-sectional center of the second staple leg. In any event, the first base width is shorter than the second base width; however, other embodiments are envisioned in which the second base width is shorter than the first base width. The third base width is shorter than the first base width and the second base width; however, other embodiments are envisioned in which the third base width is longer than the first base width and/or the second base width.

In the embodiment depicted in FIG. **35**, the second staples **680***b* have the longest base width. As a result, when the staples in the staple pattern rotate within tissue as the tissue is being stretched longitudinally, the second staples **680***b* will sweep through a larger arc length than the first staples **680***a*. Similarly, the first staples **680***a* will sweep through a larger arc length than the third staples **680***c*. In various instances, as a result, the first staples **680***a* will sweep through a first arc length, the second staples **680***b* will sweep through a second arc length, and the third staples **680***c* will sweep through a third arc length, wherein the first arc length, the second arc length, and the third arc length are different. Such arc lengths can be different even though the degree in which the staples **680***a*, **680***b*, and/or **680***c* are the same. In certain instances, the first arc length, the second arc length, and/or the third arc length can be the same.

In the embodiment depicted in FIG. **35**, the first staples **680***a* are positioned and arranged in an alternating arrangement in a staple cartridge **630**. The distal most first staple **680***a* is oriented toward the distal end of the staple cartridge **630** and toward a longitudinal slot **634** defined in the staple cartridge **630**. The next first staple **680***a* in the second longitudinal row is oriented toward the proximal end of the staple cartridge **630** and toward the longitudinal slot **634**. This pattern then repeats within the longitudinal row of first staples **680***a*.

The second staples **680***b* are positioned and arranged in an alternating arrangement in a staple cartridge **630**. The distal most second staple **680***b* is oriented toward the distal end of the staple cartridge **630** and toward a longitudinal slot **634** defined in the staple cartridge **630**. The next second staple **680***b* in the second longitudinal row is oriented toward the proximal end of the staple cartridge **630** and toward the

longitudinal slot **634**. This pattern then repeats within the longitudinal row of second staples **680***b*.

The third staples **680***c* are positioned and arranged in an alternating arrangement in a staple cartridge **630**. The distal most third staple **680***c* is oriented toward the distal end of the staple cartridge **630** and toward a longitudinal slot **634** defined in the staple cartridge **630**. The next third staple **680***c* in the third longitudinal row is oriented toward the proximal end of the staple cartridge **630** and toward the longitudinal slot **634**. This pattern then repeats within the longitudinal row of third staples **680***c*.

With further reference to the staple pattern depicted in FIG. **35**, the longitudinal row of first staples **380***a* is nested within the longitudinal row of second staples **380***b*. Similarly, the longitudinal row of third staples **380***c* is nested within the longitudinal row of second staples **380***b*.

The staple cartridge **630**, further to the above, comprises a plurality of first staple cavities **670***a* configured to removably store the first staples **680***a* therein. The staple cartridge **630** further comprises a plurality of second staple cavities **670***b* configured to removably store the second staples **680***b* and a plurality of third staple cavities **670***c* configured to removably store the third staples **680***c*. Referring to FIG. **36**, an anvil **620** can be configured to deform the staples **680***a*, **680***b*, and **680***c* as they are ejected from the staple cartridge **630**. The anvil **620** comprises a staple forming pocket pattern that is aligned with the staple cavities **670***a*, **670***b*, and **670***c*. For instance, the anvil **620** comprises a plurality of first forming pockets **690***a* aligned with the first staple cavities **670***a*, a plurality of second forming pockets **690***b* aligned with the second staple cavities **670***b*, and a plurality of third forming pockets **690***c* aligned with the third staple cavities **670***c*.

As discussed above, a staple pattern can comprise several rows. The staples in each row can have the same orientation or different orientations. FIG. **23** illustrates an embodiment comprising a row of staples having a first group of staples **780***a* oriented in a first direction and a second group of staples **780***b* oriented in a second direction. The first staples **780***a* and the second staples **780***b* are positioned along a longitudinal axis. The first staples **780***a* are angled with respect to the longitudinal axis and the second staples **780***b* are aligned with the longitudinal axis. Other arrangements are possible. The staples **780***a* are arranged in an alternating pattern with the staples **780***b*.

With continued reference to FIG. **23** and referring again to FIG. **24**, the staples within a staple row can translate and rotate within tissue when the tissue is stretched longitudinally. In some instances, the translation and/or rotation of the staples within the tissue can create holes, or gaps, between the staples and the tissue. Such holes, or gaps, can create leaks. Even though various staple patterns disclosed herein can minimize such leaks, certain improvements to the staples themselves can be made to reduce and/or eliminate these leaks.

Turning now to FIGS. **17** and **18**, a staple, such as staples **280***a*, **280***b*, **280***c*, **380***a*, **380***b*, **380***c*, **580***a*, **580***b*, **680***a*, **680***b*, **680***c*, **780***a*, and/or **780***b*, for example, is depicted in an unfired configuration. The unfired configuration of this staple is V-shaped; however, the principles discussed herein can be applied to any suitably-shaped staple. FIG. **19** illustrates the staple of FIGS. **17** and **18** in a fired configuration. The fired configuration of this staple is B-shaped; however, the principles discussed herein can be applied to any suitably-shaped staple. FIG. **20** depicts the staple of FIGS. **17-19** including a coating **881** thereon; this staple will hereinafter be referred to as staple **880**. FIG. **21** illustrates the staple **880** deployed into tissue and a hole, or gap, **882** present between the staple **880** and the tissue. FIG. **22** illustrates the coating **881** on the staple **880** in an expanded state. The expanded coating **881** can fill the entirety of the gap **882**. In some circumstances, the expanded coating **881** can stretch the tissue. In various other circumstances, the coating **881** may not fill the entirety of the gap **882**.

The staple **880** can be comprised of any suitable material, such as metal, for example. In certain instances, the staple **880** can be comprised of titanium and/or stainless steel, for example.

The expandable staple coating **881** can be comprised of any suitable material. The staple coating **881** can be comprised of Poly-L-lactic acid and/or Poly-95L/5D-lactic acid, for example. Other copolymer compositions of PLA could be utilized. In various instances, the staple coating **881** can begin to form a gel as soon as the staple **880** is implanted into the tissue wherein the gel can expand to fill, or at least partially fill, the gap **882**. In various instances, the coating **881** can be applied to the staple **880** by immersing the staple wire in one or more solutions that coat the wire. In at least one instance, the staple wire can be immersed in a first solution to apply a base coating and then a second solution to apply the PLA, for example. In some instances, the coating **881** can be applied to staples **880** when the staples **880** are positioned in a staple cartridge. The entire disclosure of ELASTOMERIC BIOMATERIALS FOR TISSUE ENGINEERING, Progress In Polymer Science 38 (2013) 584-671 by Q. Chen et al. is hereby incorporated by reference herein.

The staple coating **881** can be comprised of a hydrophilic material, for example. A hydrophilic material can comprise a hydrogel derivitized with a peptide containing RGD peptide sequence microspheres, for example. The metal wire of the staple **880** can be coated with a natural biopolymer, such as hyaluronan or hyaluronic acid, for example. Other hydrogels could be utilized. In various instances, the staple coating **881** can begin to expand as soon as the staple **880** is implanted into the tissue wherein the coating **881** can expand to fill, or at least partially fill, the gap **882**. In various instances, the coating **881** can be applied to the staple **880** by immersing the staple wire in one or more solutions that coat the wire. In at least one instance, the staple wire can be immersed in a first solution to apply a base coating and then a second solution to apply the hyaluronan loaded with peptides, for example. In some instances, the coating **881** can be applied to staples **880** when the staples **880** are positioned in a staple cartridge. The entire disclosure of ATTACHMENT OF HYALURONAN TO METALLIC SURFACES, J. Biomed. Mater. Res. 68A: 95-106 (2004) by William G. Pitt et al. is incorporated by reference herein.

The staple coating **881** can be comprised of xerogel, for example. The staple coating **881** can be comprised of gelatin microspheres and/or nanospheres, for example. Gelatin comprises an at least partially denatured, or completely denatured, form of collagen that cells can bind to and degrade through enzymatic action. In various instances, the gelatin can be loaded with fibroblast and/or platelet-derived growth factor, for example. As the coating **881** degrades, the coating **881** can at least partially fill and at least partially seal the gap **882**. In various instances, the coating **881** can be applied to the staple **880** by immersing the staple wire in a water-in-oil emulsion and then lyophilizing the gelatin microspheres and/or nanospheres onto the staple wire. The entire disclosure of GELATIN MICROSPHERES CROSS-LINKED WITH GENIPIN FOR LOCAL DELIVERY OF

GROWTH FACTORS, J. Tissue Eng. Regen. Med. 4:514-523 (2010) by Luis Solorio et al. is incorporated by reference herein.

The staple **880** is comprised of a wire having a circular cross-section; however, the staple **880** can be comprised of a wire having any suitable cross-section, such as a polygonal cross-section, for example. Non-circular cross-sections can have larger perimeters than circular cross-sections for a certain overall width. Such non-circular cross-sections can support a larger quantity of coating material than circular cross-sections which can allow the coating to expand and fill larger holes than staples having circular cross-sections. In certain instances, a non-circular cross section can be formed be creating one or more grooves in a circular cross-section. In at least one such instance, such grooves can extend longitudinally along the staple legs. In some instances, a longitudinal groove can extend along an axis. In certain instances, a longitudinal groove can wrap around a staple leg. In at least one instance, such a longitudinal groove can extend around a leg in a helical manner.

The staples of a staple cartridge can be deployed with or without the use of an adjunct material, such as buttress material, for example. Often, an adjunct material can be placed on the top surface, or deck, of a staple cartridge such that, when the staples are ejected from the staple cartridge, the staples can capture the adjunct material against the tissue. FIG. **55** illustrates two pieces of adjunct material **239** positioned on a deck surface **238** of the staple cartridge **230**. A first piece of adjunct material **239** is positioned on a first side of the longitudinal slot **234** and a second piece of adjunct material **239** is positioned on a second side of the longitudinal slot **234**. Alternative embodiments are envisioned in which a single piece of adjunct material is supported by the deck surface **238** which extends over the longitudinal slot **234** and both sides of the staple cartridge **230**. Referring again to FIG. **55**, each piece of adjunct material **239** is substantially rectangular and extends over a staple pattern including a row of first staple cavities **270***a*, a row of second staple cavities **270***b*, and a row of third staple cavities **270***c*. The staples **280***a*, **280***b*, and **280***c* stored in the staple cavities **270***a*, **270***b*, and **270***c*, respectively, penetrate the adjunct material **239** when they are ejected from the staple cartridge **230** and capture a portion of the adjunct material **239** therein as the staples **280***a*, **280***b*, and **280***c* are formed by the anvil **220**.

In addition to or in lieu of the adjunct material positioned on the staple cartridge, adjunct material may be positioned on an anvil. The staples penetrating the tissue could penetrate the anvil adjunct before contacting the anvil and then re-penetrate the anvil adjunct before re-entering into the tissue.

After the staples **280***a*, **280***b*, and **280***c* have been deformed by the anvil **220**, further to the above, the adjunct material **239** is captured against the tissue by the staples **280***a*, **280***b*, and **280***c*. Stated another way, the adjunct material **239** is implanted against the tissue by the staples **280***a*, **280***b*, and **280***c*. When the tissue is stretched longitudinally, as discussed above, the adjunct material **239** can stretch with the tissue.

Adjunct materials can provide many benefits. Adjunct materials can assist in sealing the puncture holes created by the staple legs. In various instances, the staple legs can push the adjunct material into the puncture holes as the staple legs pass through the tissue. Adjunct materials can also assist in sealing gaps created between the staple legs and the tissue when the tissue is stretched longitudinally. Adjunct materials can bolster the tissue. In various instances, the adjunct material can strengthen the tissue and inhibit the staples from tearing through the tissue.

Referring again to FIG. **55**, the reader will appreciate that portions of the adjunct material **239** are not captured by the staples **280***a*, **280***b*, and **280***c*. For instance, the portions of the adjunct material extending around the perimeter thereof may not be captured by the staples. Similarly, portions of the adjunct material positioned intermediate the staples may not be captured by the staples. Such uncaptured portions of the adjunct material **239** may not provide the sealing benefits discussed above and, at the same time, inhibit the extensibility provided by the staple patterns discussed herein. Such uncaptured portions may also inhibit the rotation of the staples within the tissue, as discussed above. Improvements to the embodiment of FIG. **55** are depicted in FIGS. **53**, **54**, **56**, and **57**. Such embodiments comprise recesses, notches, cuts, slits, apertures, and/or any other suitable interruptions configured to increase the extensibility of an adjunct material. Moreover, such interruptions may facilitate the rotation of the staples within the tissue.

Referring to FIG. **53**, an adjunct material **939** comprises scalloped edges, or sides, **938**. The scalloped sides **938** include recesses, or notches, **937** defined therein. Notches **937** comprise a curved configuration; however, any suitable configuration can be utilized. The notches **937** reduce the perimeter of uncaptured material extending around the perimeter of the adjunct material **939** and increase the flexibility and extensibility of the adjunct material **939**.

Referring again to FIG. **53**, the adjunct material **939** further comprises apertures **936** defined therein. The apertures **936** are oblong and comprise through holes; however, alternative embodiments are envisioned. The apertures **936** are located intermediate adjacent second staple cavities **270***b* and intermediate a first staple cavity **270***a* and a third staple cavity **270***c*; however, alternate locations are envisioned. The apertures **936** reduce the uncaptured material within the staples lines and increase the flexibility and extensibility of the adjunct material **939**.

Referring again to FIG. **53**, the body of the adjunct material **939** extends over the staple cavities **270***a*, **270***b*, and **270***c*. Alternative embodiments are envisioned in which the adjunct material **939** does not extend over the staple cavities **270***a*, **270***b*, and/or **270***c*. Turning now to FIG. **54**, the adjunct material **939'** includes slots, or openings, **935***a*, **935***b*, and **935***c* which partially extend over the staple cavities **270***a*, **270***b*, and **270***c*, respectively. The openings **935***a*, **935***b*, and **935***c* are larger than the apertures **936**; however, the openings **935***a*, **935***b*, and/or **935***c* can be the same size as and/or larger than the apertures **936**.

Referring to FIG. **56**, an adjunct material **1039** comprises notched edges, or sides, **1038**. The notched sides **1038** include recesses, or notches, **1037** defined therein. Notches **1037** comprise an angular configuration; however, any suitable configuration can be utilized. The notches **1037** reduce the perimeter of uncaptured material extending around the adjunct material **1039** and increase the flexibility and extensibility of the adjunct material **1039**.

Referring again to FIG. **56**, the adjunct material **1039** further comprises slits **1036** defined therein. The slits **1036** are oblong and comprise through holes; however, alternative embodiments are envisioned. The adjunct material **1039** comprises a first row of slits **1036***a* and a second row of slits **1036***b*. The slits **1036***a* are located intermediate adjacent second staples **1080***b* and intermediate a first staple **1080***a* and a third staple **1080***c*; however, alternate locations are envisioned. The slits **1036***b* are located intermediate adjacent third staples **1080***c* and intermediate a second staple

1080*b* and a fourth staple **1080***d*; however, alternate locations are envisioned. The slits **1036***a* are parallel to the first staples **1080***a* and the third staples **1080***c* and, similarly, the slits **1036***b* are parallel to the second staples **1080***b* and the fourth staples **1080***d*; however, the slits may have any suitable direction. The slits **1036***a* and**1036***b* reduce the uncaptured material within the staple lines and increase the flexibility and extensibility of the adjunct material **1039**. The slits **1036***a* and **1036***b* are shorter than the bases of the staples **1080***a*, **1080***b*, **1080***c*, and **1080***d*; however, embodiments are envisioned in which the slits **1036***a* and/or **1036***b* are the same length as and/or longer than the bases of staples **1080***a*, **1080***b*, **1080***c*, and **1080***d*.

Referring to FIG. **57**, an adjunct material **1139** comprises notched edges, or sides, **1138**. The notched sides **1138** include recesses, or notches, **1137** defined therein. Notches **1137** comprise a curved configuration; however, any suitable configuration can be utilized. The notches **1137** reduce the perimeter of uncaptured material extending around the adjunct material **1139** and increase the flexibility and extensibility of the adjunct material **1139**.

Referring again to FIG. **57**, the adjunct material **1139** further comprises slits **1136** defined therein. The slits **1136** are oblong and comprise through holes; however, alternative embodiments are envisioned. The adjunct material **1139** comprises a first row of slits **1136***a* and a second row of slits **1136***b*. The slits **1136***a* are located intermediate adjacent second staples **1180***b* and intermediate a first staple **1180***a* and a third staple **1180***c*; however, alternate locations are envisioned. The slits **1136***b* are located intermediate adjacent third staples **1180***c* and intermediate a second staple **1180***b* and a fourth staple **1180***d*; however, alternate locations are envisioned. The slits **1136***a* are parallel to the first staples **1180***a* and the third staples **1180***c* and, similarly, the slits **1136***b* are parallel to the second staples **1180***b* and the fourth staples **1180***d*; however, the slits may have any suitable direction. The slits **1136***a* and **1136***b* reduce the uncaptured material within the staple lines and increase the flexibility and extensibility of the adjunct material **1139**. The slits **1136***a* and **1136***b* are shorter than the bases of the staples **1180***a*, **1180***b*, **1180***c*, and **1180***d*; however, embodiments are envisioned in which the slits **1136***a* and/or **1136***b* are the same length as and/or longer than the bases of the staples **1180***a*, **1180***b*, **1180***c*, and **1180***d*.

As described herein, a firing member and/or wedge sled can traverse a staple cartridge to fire and/or eject staples from the staple cavities that are defined into the staple cartridge. For example, a firing member and/or a wedge sled can translate along a firing path within a staple cartridge, and the firing member and/or the wedge sled can engage a staple driver and/or the staple itself along the firing path to drive the staple from the staple cavity. As also described herein, staple arrangements that include angularly-oriented staples can provide various benefits and advantages. For example, an array of angularly-oriented staples can provide increased flexibility and/or longitudinal stretchability within stapled tissue.

When a staple is angularly-oriented relative to the firing path, at least a portion of the staple driver and/or the staple may not overlap and/or overlie the firing path. For example, the base of an angularly-oriented staple can cross the firing path such that the staple legs are positioned on opposite sides of the firing path. Additionally, an angularly-oriented staple driver can traverse the firing path, and the ends of the staple driver can be positioned on opposite sides of the firing path. In other instances, only an end of the staple and/or the staple driver may overlie the firing path and, in still other instances, the staple and/or the staple driver may be entirely offset from the firing path, for example.

In instances where at least a portion of the staple and/or the staple driver is offset from the firing path, a moment arm between the firing path and the portion(s) of the staple and/or the staple driver positioned on either side of the firing path may generate a torque within the staple and/or within the staple driver. Torque could affect tilting and/or tipping of the staples during deployment. As a result, the staple legs of a torqued staple may not engage tissue with equivalent force and/or speed, and/or the staple legs may not pierce and/or capture the tissue simultaneously. Because torqueing and/or rotation of a staple during deployment may adversely impact tissue penetration and/or staple formation, in various instances, it can be desirable to prevent and/or minimize torque generation during deployment of an array of angularly-oriented staples.

When a staple driver is angled relative to the firing path of a wedge sled, only a portion of the angled driver may receive the driving or lifting force from the wedge sled. For example, the driving force can be applied to the angled driver along a diagonal path. To stabilize the angled driver and prevent torqueing and/or rotation of the driver, and thus, of the staple supported thereon, the wedge sled can include multiple driving wedges, and at least two driving wedges can contact the driver to apply the driving force at multiple locations on the driver. For example, a pair of laterally-spaced driving wedges can engage and lift an angled driver such that the driving force is distributed at laterally-spaced intervals along the length of the driver. Moreover, in at least one instance, the laterally-spaced driving wedges can be equidistant from the center of mass of the angled driver, such that the driver is mass balanced relative to the multiple driving wedges.

Additionally or alternatively, to stabilize the angled drivers and prevent torqueing and/or rotation of the drivers, and thus, torqueing and/or rotation of the angled staples supported thereon, multiple drivers can be connected and/or linked together. In some instances, an angled multi-staple driver can be integrally formed. Connected drivers and/or a multi-staple driver can support multiple staples, which can reduce the number of moving parts within a staple cartridge and can prevent relative movement between the staple supporting surfaces of each interconnected and/or integrally formed staple cradle. Moreover, an angled multi-staple driver can be larger, i.e., wider and/or longer, than a single-staple driver. As a result, a multi-staple driver can be have an increased aspect ratio. For example, a multi-staple driver can have an aspect ratio of 1:1. In certain instances, the aspect ratio may be 3:2 or 2:1. In still other instances, the aspect ratio can be less than 1:1 or more than 2:1, for example. The greater aspect ratio of a multi-staple driver can provide greater stability to the staples supported thereon.

In various instances, a single driving wedge can engage an angled multi-staple driver, and, in certain instances, the driving force exerted on the driver by the driving wedge can be balanced relative to the center of mass of the driver. In other instances, multiple driving wedges can engage an angled multi-staple driver, which can distribute the driving force laterally across the driver. In various instances, the cumulative driving force exerted on an angled multi-staple driver by laterally-spaced driving wedges can be balanced relative to the center of mass of the driver.

In other circumstances, to stabilize angled staples within a staple cartridge and prevent torqueing and/or rotation thereof during deployment, the staples can be fired without

drivers. For example, the wedge sled can include a staple-engagement surface that directly engages sled-engagement surfaces of staples in a driverless staple cartridge. The wedge sled can contact each staple at multiple laterally-spaced positions along the base of the staple. For example, the wedge sled can include multiple driving wedges, and at least two driving wedges can contact the angled staple to apply the driving force at multiple locations. In various instances, a pair of laterally-spaced driving wedges can engage and lift the angled staple such that the driving force is equally distributed at laterally-spaced intervals along the length of the base of the staple. Moreover, in at least one instance, the laterally-spaced driving wedges can be equidistant from the center of mass of the angled staple, such that the staple is mass balanced relative to the driving wedges.

An end effector assembly **2000** is disclosed in FIG. **7**. As depicted, the end effector assembly **2000** includes a first jaw **2002**, a second jaw **2004**, a closure tube or frame **2006**, and an end effector articulation joint **2009**. The end effector assembly **2000** is movable between a first or open position and a second or closed position. As depicted, the first jaw **2002** includes pivot pins **2008**, which are movably positioned within closure slots **2010** of the second jaw **2004**. For example, the pivot pins **2008** are configured to pivot and translate in the closure slots **2010** of the second jaw **2004** as the first jaw **2002** pivots relative to the second jaw **2004** and relative to the frame **2006** of the depicted end effector assembly **2000**.

In other instances, the first jaw **2002** can be fixed relative to the frame **2006**, and the second jaw **2004** can pivot relative to the first jaw **2002** to open and close the jaws **2002**, **2004** of the end effector assembly **2000**. In still other instances, both jaws **2002**, **2004** can pivot and/or otherwise move to open and/or close the jaws **2002**, **2004** of the end effector assembly **2000**. For example, at least one of the jaws **2002**, **2004** can rotate, spin, slide and/or translate relative to the other jaw **2002**, **2004** and/or relative to the frame **2006** to open and/or close the jaws **2002**, **2004** of the end effector assembly **2000**.

Referring still to FIG. **7**, the end effector assembly **2000** is dimensioned and structured to receive a staple cartridge **2020**, which is configured for removable positioning within the end effector assembly **2000**. For example, the depicted staple cartridge **2020** can be a single-use and/or disposable cartridge, which can be replaced with another staple cartridge after firing the staples **2012** therefrom. The staple cartridge **2020** disclosed in FIG. **7** includes a deck **2026**, a cartridge body **2024**, and a casing **2022** which partially surrounds or encloses the cartridge body **2024**. The depicted staple cartridge **2020** also includes staples **2012** which can be ejectably positioned in the cartridge body **2024**. The staples **2012** disclosed in FIG. **7** are generally "V-shaped" staples, which have non-parallelly extending legs.

In various instances, a staple cartridge, such as the staple cartridge **2020**, for example, can be integrally formed with the end effector assembly **2000** and/or can be permanently fixed within one of the jaws **2002**, **2004**, for example. In such instances, the end effector assembly **2000** can be a single-use and/or disposable end effector. In other instances, a staple cartridge that is fixed to the end effector assembly **2000** can be reloaded with additional staples for subsequent firings, for example.

Referring again to the staple cartridge **2020** disclosed in FIG. **7**, a longitudinal slot **2032** is defined at least partially though the cartridge body **2024**. The depicted longitudinal slot **2032** extends along a longitudinal axis L, which extends between a proximal end **2023** and a distal end **2025** of the cartridge body **2024**. The longitudinal slot **2032** shown in FIG. **7** extends from the proximal end **2023** toward the distal end **2025** and traverses a portion of the length of the cartridge body **2024**.

In some instances, the longitudinal slot **2032** can traverse the entire length of the cartridge body **2024**. In other instances, the longitudinal slot **2032** can extend from the distal end **2023** toward the proximal end **2025**, for example. In still other instances, the cartridge body **2024** may not include a predefined and/or preformed longitudinal slot. For example, a firing member and/or a cutting element can transect and/or cut the cartridge body **2024** during the firing stroke to form a slot therein.

The staple cartridge **2020** disclosed in FIG. **7** is configured to fire an array **2011** of staples **2012** into tissue. The staple array **2011** shown in FIG. **7** includes angled staples **2012**, which are angled relative to the longitudinal axis L and relative to the firing paths of the driving wedges **2064***a*, **2064***b*, which are further described herein. The staple cartridge **2020** disclosed in FIG. **7** also includes multi-staple drivers **2040***a*, **2040***b*, which are further described herein, to drivingly support the angled staples **2012** in the array **2011**.

The angled staples **2012** are removably positioned in angled staple cavities **2028** which are defined into the cartridge body **2024** disclosed in FIG. **7**. For example, the depicted staple cavities **2028** are angularly-oriented relative to the longitudinal axis L. The depicted arrangement of staple cavities **2028** corresponds to the depicted staple array **2011** positioned in the staple cartridge **2020**. Each staple cavity **2028** shown in FIG. **7** includes an opening **2030** in the deck **2026**, and each opening **2030** includes a proximal end, a distal end, and a staple axis extending between the proximal end and the distal end. The staple axis of the openings **2030** are skewed and/or angled relative to the longitudinal axis L of the cartridge body **2024**. For example, in the staple cartridge **2020** of FIG. **7**, all the staple cavities **2028** defined into the cartridge body **2024** are angularly-oriented relative to the longitudinal axis L and various staple cavities **2028** are angularly-oriented relative to other staple cavities **2028**.

The staple cavities **2028** disclosed in FIG. **7** are arranged in multiple rows on each side of the longitudinal slot **2032**. For example, a portion of the staple cavities **2028** are arranged in a first inside row **2033**, a first outside row **2035**, and a first intermediate row **2037** on a first side **2027** of the longitudinal slot **2032**, and another portion of the staple cavities **2028** are arranged in a second inside row **2034**, a second outside row **2038**, and a second intermediate row **2036** on a second side **2029** of the longitudinal slot **2032**. In the staple cartridge **2020** depicted in FIG. **7**, the staple cavities **2028** and rows **2033**, **2034**, **2035**, **2036**, **2037**, **2038** thereof are symmetrical relative to the longitudinal slot **2032**.

Though the depicted staple cavities **2028** do not cross or otherwise contact each other, the longitudinal rows **2033**, **2034**, **2035**, **2036**, **2037**, **2038** of staple cavities **2028** overlap. For example, various staple cavities **2028** shown in FIG. **7** extend laterally outboard and/or laterally inboard past the staple cavities **2028** in adjacent rows of staple cavities **2028**. Additionally, various depicted staple cavities **2028** extend proximally and/or distally past the staple cavities **2028** in adjacent rows of staple cavities **2028**. Because the staples **2012** are arranged in an overlapping array **2011**, bleeding and/or fluid flow in the stapled tissue can be controlled. An overlapping array of staples, like the staple

array **2011**, for example, could be incorporated into other staple cartridges and/or end effector assemblies disclosed herein.

In other instances, greater than or fewer than three rows of staple cavities **2028** can be positioned on either side **2027**, **2029** of the longitudinal slot **2032**. In some instances, one of the sides **2027**, **2029** of the staple cartridge **2020** can include a different number of rows of staple cavities **2028** than the other side **2027**, **2029**. In some instances, the staple cavities **2028** may not longitudinally and/or laterally overlap the staple cavities **2028** in adjacent rows. Additionally or alternatively, in certain instances, the staple cavities **2028** and/or rows thereof can be asymmetrical relative to the longitudinal slot **2032** and/or the longitudinal axis L.

Referring still to FIG. **7**, the depicted staple cavities **2028** in each longitudinal row are parallel or substantially parallel. For example, as disclosed in FIG. **7**, the staple cavities **2028** in the first inside row **2033** are parallel to each other, the staple cavities **2028** in the first outside row **2035** are parallel to each other, the staple cavities **2028** in the first intermediate row **2037** are parallel to each other, the staple cavities **2028** in the second inside row **2034** are parallel to each other, the staple cavities **2028** in the second outside row **2036** are parallel to each other, and the staple cavities **2028** in the second intermediate row **2038** are parallel to each other.

As also disclosed in FIG. **7**, the staple cavities **2028** in each longitudinal row are angularly-oriented relative to the staple cavities **2028** in the adjacent longitudinal row(s). For example, on the first side **2027** of the depicted cartridge body **2024**, the staple cavities **2028** in the first intermediate row **2037** are angularly-oriented relative to the staple cavities **2028** in the first inner row **2033** and in the first outer row **2035**. Additionally, on the second side **2029** of the depicted cartridge body **2024**, the staple cavities **2028** in the second intermediate row **2038** are angularly-oriented relative to the staple cavities **2028** in the second inner row **2034** and the second outer row **2036**.

In other instances, only a portion of the staples cavities **2028** in each longitudinal row **2033**, **2034**, **2035**, **2036**, **2037**, **2038** may be parallel to each other and/or less than all of the longitudinal rows **2033**, **2034**, **2035**, **2036**, **2037**, **2038** can include staple cavities **2028** that are parallel to each other. Additionally or alternatively, in certain instances, at least a portion of the staple cavities **2028** can be randomly oriented. In some instances, at least one of the staple cavities **2028** in a longitudinal row **2033**, **2034**, **2035**, **2036**, **2037**, **2038** can be parallel to at least one of the staple cavities **2028** in an adjacent longitudinal row **2033**, **2034**, **2035**, **2036**, **2037**, **2038**. In certain instances, the staple cartridge **2020** can include at least one staple cavity **2028** and/or at least one row of staple cavities that are parallel to the longitudinal axis L of the cartridge body **2024**. See, for example, FIG. **10**.

The staple cartridge **2020** disclosed in FIG. **7** includes drivers **2040***a*, **2040***b*, which are structured and dimensioned to movably fit within the cartridge body **2024** (FIG. **7**). Referring to FIGS. **7-9**, the drivers **2040***a*, **2040***b* include first drivers **2040***a* (FIGS. **8-8**B) and second drivers **2040***b* (FIGS. **8**C-**9**). The first and second drivers **2040***a*, **2040***b* are each configured to support multiple staples **2012**. As shown in FIGS. **7-9**, the multi-staple first drivers **2040***a* have a first geometry and the multi-staple second drivers **2040***b* have a second geometry. The geometry of the multi-staple drivers **2040***a*, **2040***b* corresponds to the array **2011** of staples **2012** and to the arrangement of staple cavities **2028** shown in FIG. **7**.

As described herein, the arrangement of staples **2012** and staple cavities **2028** on the first side **2027** of the longitudinal slot **2032** is a mirror image of the arrangement of staples **2012** and staple cavities **2028** on the second side **2029** of the longitudinal slot **2032**. Additionally, the geometry of the first drivers **2040***a* is a mirror image of the geometry of the second drivers **2040***b*. As depicted in FIG. **7**, the first drivers **2040***a* are positioned on a first side **2027** of the longitudinal slot **2032**, and the second drivers **2040***b* are positioned on a second side **2029** of the longitudinal slot **2032**.

In some instances, the drivers on one side of a cartridge body may not be a mirror image of the drivers on the other side of the cartridge body. Additionally, the first multi-staple drivers **2040***a* and/or the second multi-staple drivers **2040***b* can be positioned on different and/or both sides **2027**, **2029** of the longitudinal slot **2032**. For example, multi-staple drivers having different geometries can be positioned on the same side of the longitudinal slot **2032**. In still other instances, the staple cartridge **2020** can include multi-staple drivers of three or more different geometries. For example, a specialized and/or different staple driver can correspond to a particular staple and/or group of staples. Alternatively, in some instances, all multi-staple drivers in the staple cartridge **2020** can have the same geometry.

The first and second multi-staple drivers **2040***a*, **2040***b* disclosed in FIGS. **7-9** include multiple troughs or staple supporting cradles **2042**. Moreover, each depicted driver **2040***a*, **2040***b* is configured to drive multiple staples **2012**. For example, the first drivers **2040***a* (FIGS. **8-8**B) include a first cradle **2042***a*, a second cradle **2042***b*, and a third cradle **2042***c*, which are each dimensioned and structured to support one staple **2012**. For example, the base **2014** (FIG. **8**B) of a staple **2012** is positioned in each cradle **2042***a*, **2042***b*, **2042***c* of the first driver **2040***a*. Additionally, referring primarily to FIGS. **8**C-**9**, the second drivers **2040***b* also include a first cradle **2042***a*, a second cradle **2042***b*, and a third cradle **2042***c*, which are each dimensioned and structured to support one staple **2012**. For example, the base **2014** (FIG. **9**) of a staple **2012** is positioned in each cradle **2042***a*, **2042***b*, **2042***c* of the second driver **2040***a*.

As disclosed in FIG. **7**, the first drivers **2040***a* are right-side drivers, which are positioned in the right side, or the first side **2027**, of the staple cartridge **2020**. The first cradle **2042***a* (FIGS. **8-8**B) of each first driver **2040***a* is configured to be aligned with a staple **2012** in the first outer row **2035** of staple cavities **2028**, the second cradle **2042***b* (FIGS. **8-8**B) of each first driver **2040***a* is configured to be aligned with a staple **2012** in the first intermediate row **2037** of staple cavities **2028**, and the third cradle **2042***c* (FIGS. **8-8**B) of each first driver **2040***a* is configured to be aligned with a staple **2012** in the first inner row **2033** of staple cavities **2028**.

As further disclosed in the FIG. **7**, the second drivers **2040***b* are left-side drivers, which are positioned in the left side, or second side **2029**, of the staple cartridge **2020**. For example, the first cradle **2042***a* (FIGS. **8**C-**9**) of each second driver **2040***b* is configured to be aligned with a staple **2012** in the second outer row **2036** of staple cavities **2028**, the second cradle **2042***b* (FIGS. **8**C-**9**) of each second driver **2040***b* is configured to be aligned with a staple **2012** in the second intermediate row **2038** of staple cavities **2028**, and the third cradle **2042***c* (FIGS. **8**C-**9**) of each second driver **2040***b* is configured to be aligned with a staple **2012** in the second inner row **2034** of staple cavities **2028**.

Each cradle **2042***a*, **2042***b*, **2042***c* disclosed in FIGS. **8-9** is defined into a step or platform **2045** of the first driver **2040***a* or the second driver **2040***b*. For example, the depicted

first drivers **2040***a* and depicted second drivers **2040***b* include platforms **2045**, and a cradle **2042***a*, **2042***b*, **2042***c* is defined into each of the platforms **2045**. The platforms **2045** disclosed in FIGS. **8-9** of the driver **2040***a*, **2040***b* are the same height or elevation, and are configured to hold each staple **2012** in the array **2011** at the same height or elevation relative to the other staples **2012** in the array **2011**. Referring still to FIGS. **8-9**, a connecting flange **2048** is also disclosed, which extends between the steps **2045** of each driver **2040***a*, **2040***b*. The connecting flange **2048** can limit and/or restrain relative movement between the steps **2045**.

In other instances, the steps or platforms **2045** can have different heights and/or elevations. For example, the height of each step **2045** can be varied to control the formed height of staples **2012**, and thus, the compression of tissue captured within the formed staples **2012**. Additionally or alternatively, the depth of each cradle **2042***a*, **2042***b*, **2042***c* can be varied to control the height of the formed staples **2012**, and thus, the compression of tissue captured within the formed staples **2012**.

The first and second drivers **2040***a*, **2040***b* and the cradles **2042***a*, **2042***b*, **2042***c* thereof are oriented in an arrangement that complements the arrangement of staple cavities **2028** and staple array **2011** in the staple cartridge **2020** As disclosed in FIGS. **8**A and **8**D, each cradle **2042***a*, **2042***b*, **2042***c* includes a first end **2044** and a second end **2046**, and the first end **2044** of each cradle **2042***a*, **2042***b*, **2042***c* is distal to the second end **2046** of the same cradle **2042***a*, **2042***b*, **2042***c*. Additionally, an axis is defined between the first end **2044** and the second end **2046** of each cradle **2042***a*, **2042***b*, **2042***c*. For example, a first axis A_a is defined by the first cradle **2042***a*, a second axis Ab is defined by the second cradle **2042***b*, and a third axis A_c is defined by the third cradle **2042***c*.

In the depicted arrangement, the orientation of the first axis A_a is configured to match or correspond to the orientation of the angled staple **2012** supported by the first cradle **2042***a*, the orientation of the second axis Ab is configured to match or correspond to the orientation of the angled staple **2012** supported by the second cradle **2042***b*, and the orientation of the third axis A_c is configured to match or correspond to the orientation of the angled staple **2012** supported by the third cradle **2042***c*.

As disclosed in FIGS. **8**A and **8**D, the first axis A_a is parallel, or generally parallel, to the third axis A_c. Additionally, the second axis A_b depicted in FIGS. **8**A and **8**D traverses both the first axis A_a and the third axis A_c. For example, as disclosed in FIGS. **8**A and **8**D, the second axis A_b is perpendicular, or generally perpendicular, to the first axis A_a and the third axis A_c.

In instances where the drivers **2040***a*, **2040***b* are used in a staple cartridge having a different arrangement of staples **2012** and staple cavities **2028**, the relative orientations of the cradles **2042***a*, **2042***b*, **2042***c* can be different. In some arrangements, for example, all of the axes A_a, A_b, A_c may be parallel. In still other arrangements, for example, all of the axes A_a, A_b, A_c may cross. In certain instances, one axis A_a, A_b, A_c may be perpendicular to at least one other axis A_a, A_b, A_c. Additionally or alternatively, in some instances, one axis A_a, A_b, A_c may be parallel to at least one other axis A_a, A_b, A_c.

Referring primarily to FIGS. **8-8**C, the first and second drivers **2040***a*, **2040***b* are integrally formed pieces. For example, each driver **2040***a*, **2040***b* consists of an integrally molded part. In other instances, at least one step **2045** and/or connecting flange **2048** can be independently formed. In such instances, the multiple pieces can be glued, welded, and/or otherwise adhered together, for example, to form a unitary piece.

The multi-staple drivers **2040***a*, **2040***b* disclosed in FIGS. **7-9** are configured to drive staples **2012** from staple cavities **2028** across multiple longitudinal rows **2033**, **2034**, **2035**, **2036**, **2037**, **2039**. In the staple cartridge **2020** depicted in FIG. **7**, the staples **2012** are arranged in three longitudinal rows on each side of the slot **2032**, and the drivers **2040***a*, **2040***b* are configured to support and drive staples **2012** in each of the three longitudinal rows. For example, each depicted first driver **2040***a* is configured to drive a staple **2012** positioned in the first inner row **2033**, a staple **2012** positioned in the first intermediate row **2037**, and a staple **2012** positioned in the first outer row **2035** of staple cavities **2028**. Additionally, each depicted second driver **2040***b* is configured to drive a staple **2012** positioned in the second inner row **2034**, a staple **2012** positioned in the second intermediate row **2038**, and a staple **2012** positioned in the second outer row **2036** of staple cavities **2028**.

In other instances, the staples **2012** can be arranged in more than three longitudinal rows or less than three longitudinal rows on each side of the slot **2032**, and the drivers **2040***a*, **2040***b* can be configured to engage staples **2012** in each of the longitudinal rows on each side of the slot **2032**. For example, the staple cartridge **2020** can have two rows of staple cavities **2028** on either side of the longitudinal axis L, and a multi-staple driver positioned therein can include two cradles, which can be configured to support a staple in each of the two rows. In some instances, a multi-staple driver can fire multiple staples **2012** from the same row of staple cavities **2028**. For example, a multi-staple driver can fire adjacent staples **2012** in the same row, such as a more proximal staple **2012** and a more distal staple **2012**, for example. In certain instances, a multi-staple driver may not engage staples **2012** in every row on a side of the longitudinal slot **2032**. For example, a separate and distinct driver may engage staples in one of the rows, such as an outermost row and/or an innermost row, for example. Additionally or alternatively, in certain instances, the staple cartridge **2020** can include at least one multi-staple driver and at least one single-staple driver. See, for example, FIG. **12**.

The end effector assembly **2000** disclosed in FIG. **7** further includes a firing member **2060**, which is configured to move relative to the cartridge body **2024**. During a firing stroke, the firing member **2060** is configured to traverse the cartridge body **2024**, and drivingly engage a sled **2058** to move the sled **2058** through the cartridge body **2024**. For example, a portion of the depicted firing member **2060** is dimensioned and positioned to fit within the longitudinal slot **2032**. As disclosed in FIG. **7**, the portion of the firing member **2060** that is configured to fit within the longitudinal slot **2032** includes a cutting edge **2061**, which is configured to incise tissue clamped between the first jaw **2002** and the second jaw **2004** of the end effector assembly **2000**.

The wedge sled **2058** disclosed in FIG. **7** is configured to engage the drivers **2040***a*, **2040***b* to lift the drivers **2040***a*, **2040***b*, and thus, fire the staples **2012** supported thereon, into tissue. In the depicted end effector assembly **2000**, an intermediate wedge **2062** of the sled **2058** can slide and/or translate within the longitudinal slot **2032**, and laterally positioned driving wedges or driving rails **2064***a*, **2064***b* defined on the sled **2058** can engage the staple drivers **2040***a*, **2040***b*. For example, the sled **2058** shown in FIG. **7** includes driving wedges or rails **2064***a*, **2064***b*, which are configured to move along firing paths F_1 (FIG. **8**A) and F_2 (FIG. **8**D) during a firing stroke to contact the multi-staple

first and second drivers **2040***a*, **2040***b* that are longitudinally aligned with the firing paths F_1, F_2.

As disclosed in FIG. **7**, the sled **2058** includes a driving wedge **2064***a*, **2064***b* on either side of the central portion **2062**. The driving wedge **2064***a* on the first side **2027** of the staple cartridge **2020** is configured to move along the first firing path F_1 (FIG. **8**A), and the driving wedge **2064***b* on the second side **2029** of the staple cartridge **2020** is configured to move along the second firing path F_2 (FIG. **8**D).

Each driving wedge **2064***a*, **2064***b* disclosed in FIG. **7** is configured to engage one of the multi-staple drivers **2040***a*, **2040***b* to lift the drivers **2040***a*, **2040***b* within the staple cavities **2028** and eject the staples **2012** from the cartridge body **2024**. In the depicted arrangement, the three steps **2045** of each first driver **2040***a* remain fixed relative to each other, and the three steps **2045** of each second driver **2040***b* remain fixed relative to each other. In other words, the steps **2045** of a single driver **2040***a*, **2040***b* do not move and/or rotate relative to each other. Because the steps **2045** of a single driver **2040***a*, **2040***b* do not move and/or rotate relative to each other, relative movement of the staples **2012** supported by each driver **2040***a*, **2040***b* is also restrained. Additionally, each driver **2040***a*, **2040***b* has a larger base or footprint within the cartridge body **2042**, which can further reduce rotation and/or torqueing of the drivers **2040***a*, **2040***b*. As a result, shifting and/or tilting of the staples **2012** during deployment may be prevented, minimized and/or controlled by the multi-staple drivers **2040***a*, **2040***b*. Multi-staple drivers, like the drivers **2040***a*, **2040***b*, for example, could be incorporated into other staple cartridge and/or end effector assemblies disclosed herein.

In various instances, the driving wedges **2064***a*, **2064***b* of the sled **2058** can be dimensioned, structured and positioned to engage a driving surface of the drivers **2040***a*, **2040***b*, respectively. For example, the drivers **2040***a*, **2040***b* can include a ramped surface and/or track, which is configured to guide and/or receive a portion of a driving wedge **2064***a*, **2064***b*, respectively, as the firing member **2060** and the sled **2058** move through the staple cartridge **2020**.

The relative placement of the driving wedges **2064***a*, **2064***b*, and their corresponding firing paths F_1, F_2, respectively, to the drivers **2040***a*, **2040***b* and the staples **2012** supported by the drivers **2040***a*, **2040***b* may be selected to prevent, reduce, and/or control torqueing of the drivers **2040***a*, **2040***b* and/or the staples **2012** during firing. For example, the geometry and/or material of the drivers **2040***a*, **2040***b* can be selected to place the center of mass (COM) of each driver **2040***a*, **2040***b* into alignment with the corresponding firing path F_1, F_2, respectively. Additionally or alternatively, the driving wedges **2064***a*, **2064***b*, and thus the firing paths F_1, F_2, respectively, can be positioned within the cartridge **2020** to extend through the center of mass (COM) of the drivers **2040***a*, **2040***b*, respectively.

In other instances, as further described herein, the sled **2058** can include more than one driving wedge **2064***a*, **2064***b* on each side of the intermediate portion **2062**. For example, multiple driving wedges **2064***a*, **2064***b* can move through either side **2027**, **2029** of the cartridge body **2024**. Additionally or alternatively, the driving wedges **2064***a*, **2064***b* of the wedge sled **2058** can be configured to directly engage and drive the staples **2012**, as further described herein.

Referring primarily to FIGS. **8**A and **8**D, the first and second drivers **2040***a*, **2040***b* overlie the firing paths F_1, F_2, respectively, of the driving wedges **2064***a*, **2064***b*, respectively.

For example, the first driver **2040***a* overlies the first firing path F_1 and the second driver **2040***b* overlies the second firing path F_2. Moreover, various portions of each driver **2040***a*, **2040***b* are positioned on either side of the respective driving wedge **2064***a*, **2064***b*, and thus, on either side of the firing paths F_1, F_2. Referring still to FIGS. **8**A and **8**D, the depicted drivers **2040***a*, **2040***b* are dimensioned and structured such that the center of mass (COM) of each driver **2040***a*, **2040***b* overlaps the corresponding firing path F_1, F_2 of the driving wedge **2064***a*, **2064***b*, respectively, for example. In other words, each depicted driver **2040***a*, **2040***b* is mass balanced relative to the corresponding firing path F_1, F_2.

For example, as disclosed in FIG. **8**A, a first portion **2047** of the first driver **2040***a* is positioned on a first side of the firing path F_1, and a second portion **2049** of the first driver **2040***a* is positioned on a second side of the firing path F_1. The first portion **2047** of the first driver **2040***a* has a first mass m_1 and the second portion **2049** of the first driver **2040***a* has a mass m_2, which equals, or substantially equals, the first mass m_1. Additionally, as disclosed in FIG. **8**D, a first portion **2047** of the second driver **2040***b* is positioned on a first side of the firing path F_2, and a second portion **2049** of the second driver **2040***b* is positioned on a second side of the firing path F_2. The first portion **2047** of the second driver **2040***b* has a first mass m_1 and the second portion **2049** of the second driver **2040***b* has a mass m_2, which equals or substantially equals the first mass m_1. Because the drivers **2040***a*, **2040***b* are mass balanced relative to the respective firing paths F_1, F_2, torqueing of the drivers **2040***a*, **2040***b* and the staples **2012** supported thereon during firing can be minimized and/or otherwise controlled. Additionally, the group of staples **2012** deployed by each driver **2040***a*, **2040***b* can be synchronously lifted relative to the cartridge body **2024** and simultaneously driven or fired into tissue. Mass balanced drivers, like the drivers **2040***a*, **2040***b*, for example, could be incorporated into other embodiments disclosed herein.

Additionally, as disclosed in FIGS. **8**-**9**, at least one cutout **2050** is defined into the first and second multi-staple drivers **2040***a*, **2040***b*. For example, various cutouts **2050** are defined into the connecting flange **2048** of the drivers **2040***a*, **2040***b*. The cutouts **2050** are dimensioned and positioned to adjust the mass of the drivers **2040***a*, **2040***b*, and balance the center of mass (COM) of each driver **2040***a*, **2040***b* relative to the corresponding firing path F_1, F_2. Additionally, the cutouts **2050** are dimensioned and positioned to accommodate for the geometry of the staple cavities **2028**, in which the drivers **2040***a*, **2040***b* are movably positioned.

In certain instances, multiple staple cavities can be defined into a staple cartridge, at least one staple cavity can be parallel to the longitudinal axis of the staple cartridge, and at least one staple cavity can be angularly-oriented relative to the longitudinal axis of the staple cartridge. Referring to the staple cartridge **2120** depicted in FIG. **10**, for example, multiple staple cavities **2128** are defined into the staple cartridge **2120**, and multiple staple cavities **2128** are parallel to the longitudinal axis L of the staple cartridge **2120**.

In the depicted staple cartridge **2120**, a longitudinal slot **2032** is defined partially through the cartridge body **2124**. Also defined in the cartridge body **2124** is a row of staple cavities **2128** on either side of the longitudinal slot **2032** which includes staple cavities **2128** that are oriented parallel to the longitudinal axis L. In the depicted staple cartridge **2120**, a first row **2137** of staple cavities **2128** and a second row **2138** of staple cavities **2128** are adjacent to the longi-

tudinal slot **2032**, and the staple cavities **2128** in the first row **2137** and in the second row **2138** are oriented parallel to the longitudinal axis L. For example, as disclosed in FIG. **10**, the staple cavities **2128** in the first row **2137** are aligned with an axis A_b, which is parallel to the longitudinal axis L.

The staple cartridge **2120** disclosed in FIG. **10** includes additional rows of staple cavities **2128**. For example, the depicted staple cartridge **2120** includes a third row **2135** of staple cavities **2128** and a fourth row **2136** of staple cavities **2128**, which include staple cavities **2128** that are angularly-oriented relative to the longitudinal axis L. In such instances, the staple cavities **2128** in the third and fourth rows **2135**, **2136** are also angularly-oriented relative to the staple cavities **2128** in the first and second rows **2137**, **2138** and are also angularly-oriented relative to each other. For example, a staple cavity **2128** in the third row **2135** is aligned with an axis A_a, which traverses the longitudinal axis L and traverses the axis A_b of the first row **2137** of staple cavities **2128**. As further disclosed in FIG. **10**, the staple cavities **2128** in the fourth row **2136** extend along an axis that traverses the axis A_a of a staple cavity **2128** in the third row **2135**. The first and third rows **2137**, **2135** of staple cavities **2128** are positioned on a first side **2127** of the depicted cartridge body **2124**, and the second and fourth rows **2136**, **2138** are positioned on a second side **2129** of the depicted cartridge body **2124**.

In various instances, the staple cartridge **2120** disclosed in FIG. **10** can be used with the end effector assembly **2000** depicted in FIG. **7**. For example, the staple cartridge **2120** can be loaded into the elongate channel of the second jaw **2004** of the end effector assembly **2000**. The staple cartridge **2120** can be fired with single-staple drivers, multi-staple drivers, and/or a combination thereof. For example, a multi-staple driver may be configured to fire staples from the staple cavities **2128** in the first and third rows **2137**, **2135** on the first side **2127** of the cartridge body **2124**, and another multi-staple driver can be configured to fire staples from the staple cavities **2128** in the second and fourth rows **2136**, **2138** on the second side **2129** of the cartridge body **2124**. In various instances, the drivers can be positioned within the cartridge body **2124** such that the cradles of the drivers are aligned with the staples positioned in the staple cavities **2128**. In such instances, the drivers and/or the staples supported thereon can be mass balanced relative to the firing path(s) of a sled, such as the sled **2058** (FIG. **7**), for example, which can be configured to traverse the cartridge body **2124** and engage the drivers therein.

In other instances, the staple cartridge **2120** may not include drivers. For example, a firing member and/or sled, such as the firing member **2060** and/or the sled **2058** (FIG. **7**), for example, can be configured to directly contact, engage, and/or drive the staples movably positioned in the staple cavities **2128**. In such instances, the staples can be mass balanced relative to the firing path(s) of the sled **2058**. In still other instances, the staples can be held in position within the cartridge body **2124**, and can be crushed and/or otherwise deformed within the cartridge body **2124**, for example.

In various instances, a multi-staple driver can be balanced relative to multiple driving wedges that concurrently engage and cooperatively lift the driver during deployment. For example, multi-staple drivers **2240** and a pair of driving wedges **2264***a*, **2264***b* are depicted in FIG. **11**. The multi-staple drivers **2240** are configured for use with the staple cartridge **2020**, for example. Additionally or alternatively, the drivers **2240** can be used with various other staple cartridges having a staple array that matches the array **2011** (FIG. **7**) and corresponds to the arrangement of drivers **2240** shown in FIG. **11**.

In various instances, a staple that is fired from the staple cartridge **2120** can be formed to a variable formed height. For example, the staple can have a greater height between one of the staple legs and the base than between the other staple leg and the base. In such instances, the staple can exert a greater compressive force on tissue at the shorter end of the staple. As described in greater detail herein, the height of a staple can be varied when the staple driver comprises a step or height differential (see, for example, FIG. **79**), and/or when the staple forming pockets in the anvil comprise a step or height differential (see, for example, FIG. **80**).

When an angled staple is deformed to a variable height, the compressive force exerted on the tissue by the angled staple can vary longitudinally and laterally. In certain instances, for example, it can be desirable to compress tissue closer to the cutline, i.e., laterally inboard, more than tissue farther from the cutline, i.e., laterally outboard. In such instances, the lateral tissue variation afforded by an angled staple that has been deformed to different compressed heights can exert a greater compressive force on a laterally inboard portion of tissue and a reduced compressive force on a laterally outboard portion of tissue.

Referring again to FIG. **10**, in certain instances, the staples ejected from the third row **2135** of staple cavities **2128** and from the fourth row **2136** of staple cavities **2128** can be deformed to variable heights. For example, the staples can have a reduced height closer to the longitudinal axis L, and a greater height farther from the longitudinal axis L. Additionally or alternatively, the staples ejected from the first row **2137** of staple cavities **2128** and from the second row of staple cavities **2138** can be deformed to a uniform height, which can be less than the reduced, or smaller height, of the staples ejected from the third row **2135** and the fourth row **2136** of staple cavities **2128**. In such instances, the compressive force exerted on the tissue can be greatest closer to the cutline, and can gradually decrease farther outboard toward the lateral sides of the staple line.

Each driver **2240** disclosed in FIG. **11** includes multiple troughs or staple supporting cradles **2242***a*, **2242***b*, **2242***c*. For example, each driver **2240** includes a first cradle **2242***a*, a second cradle **2242***b*, and a third cradle **2242***c*, which are each dimensioned and structured to support one staple, such as one of the staples **2012** (FIG. **7**). For example, the base of a staple can be positioned in each cradle **2242***a*, **2242***b*, **2242***c*. Referring again to the staple cartridge **2020** depicted in FIG. **7**, the first cradle **2242***a* can be aligned with a staple **2012** in the first outer row **2035** of staple cavities **2028**, the second cradle **2242***b* can be aligned with a staple **2012** in the first intermediate row **2037** of staple cavities **2028**, and the third cradle **2242***c* can be aligned with a staple **2012** in the first inner row **2033** of staple cavities **2028**. In such instances, the first cradle **2242***a* corresponds to an outer cradle, the second cradle **2242***b* corresponds to an intermediate cradle, and the third cradle **2242***c* corresponds to an inner cradle. In various instances, another driver arrangement can be positioned on the opposite side of the staple cartridge, and the other driver arrangement can be the mirror image reflection of the driver arrangement depicted in FIG. **11**.

The cradles **2242***a*, **2242***b*, **2242***c* depicted in FIG. **11** are defined into a support member **2248**. The support member **2248** can support staples across multiple rows of staple cavities. Additionally, the support member **2248** can support staples **2012** oriented at varying angles relative to the

longitudinal axis L of the staple cartridge, and/or relative to the longitudinal firing paths of the driving wedges **2264***a*, **2264***b*, for example. Referring to the depicted support member **2248**, the support member **2248** is angularly-oriented relative to the firing paths of the driving wedges **2264***a*, **2264***b*. Additionally, the support member **2248** is angularly-oriented relative to at least one of the cradles **2242***a*, **2242***b*, **2242***c* defined therein. For example, the intermediate cradle **2242***b* disclosed in FIG. **11** is angularly-oriented relative to the support member **2248**. Moreover, as disclosed in FIG. **11**, the outer cradle **2242***c* and the inner cradle **2242***a* are aligned with the support member **2248**.

In certain instances, the height of the support member **2248** can be uniform, or generally uniform, such that each staple supported by the support member **2248** is positioned at the same height or elevation. In other instances, the support member **2248** can include steps having different heights and/or elevations. For example, the height of a step can be varied to control the height of the formed staples, and thus, the compression of tissue captured within the formed staples. Additionally or alternatively, the depth of each cradle **2242***a*, **2242***b*, **2242***b* can be varied to control the height of the formed staples, and thus, the compression of tissue captured within the formed staples.

Each cradle **2242***a*, **2242***b*, **2242***c* disclosed in FIG. **11** includes a first end **2244** and a second end **2246**. The first end **2244** of each cradle **2242***a*, **2242***b*, **2242***c* is distal to the second end **2246** of the same cradle **2242***a*, **2242***b*, **2242***c*. Additionally, an axis is defined between the first end **2244** and the second end **2246** of each cradle **2242***a*, **2242***b*, **2242***c*. For example, a first axis A_a is defined by the first cradle **2242***a* and the third cradle **2242***c*, and a second axis A_b is defined by the second cradle **2242***b*. As depicted in FIG. **11**, the second axis A_b traverses the first axes A_a. In certain instances, the second axis A_b can be perpendicular, or generally perpendicular, to the first axis A_a.

Referring still to FIG. **11**, the multi-staple drivers **2240** include rails **2245***a*, **2045***b*, which are connected to the support member **2248**. The rails **2245***a*, **2245***b* are positioned to engage the driving wedges **2264***a*, **2264***b* of a wedge sled. For example, the depicted rails **2245***a*, **2245***b* are aligned with the firing paths F_1, F_2 of the driving wedges **2264***a*, **2264***b*. In such instances, the rails **2245***a*, **2245***b* can provide an elongated surface area for receiving the driving force from the driving wedges and for stabilizing the multi-staple drivers **2240** when the driving wedges **2264***a*, **2264***b* drivingly engage the rails **2245***a*, **2245***b*.

The drivers **2240** can include multiple independently formed parts, which can be glued, welded, and/or otherwise adhered together. For example, the support member **2248** can be joined together with the rails **2245***a*, **2245***b* to form the driver **2240**. In other instances, each driver **2240** can be an integrally molded part, which includes the support member **2248** and the rails **2245***a*, **2245***b*.

The drivers **2240** that are disclosed in FIG. **11** overlie the firing paths F_1, F_2 of the driving wedges **2264***a*, **2264***b*. Moreover, various portions of each depicted driver **2240** are positioned on either side of the wedges **2264***a*, **2264***b*. As shown in FIG. **11**, the drivers **2240** are dimensioned and structured such that the center of mass (COM) of each driver **2240** is equidistant from the drive axes, e.g., equidistant from the firing paths F_1, F_2 of the driving wedges **2264***a*, **2264***b*. For example, the firing paths F_1, F_2, depicted in FIG. **11**, are separated by a width w, and the center of mass of each driver **2240** is positioned between the firing paths F_1, F_2. As shown in FIG. **11**, the center of mass of each driver **2240** is laterally offset from the first firing path F_1 by a width w/2 and laterally offset from the second firing path F_2 by a width w/2. As a result, each depicted driver **2240** is mass balanced relative to the firing paths F_1, F_2. Because the drivers **2240** are mass balanced relative to the firing paths F_1, F_2, torqueing of the drivers **2240** and staples during deployment may be prevented, minimized and/or otherwise controlled. Mass balanced drivers, like the drivers **2240**, for example, could be incorporated into other staple cartridges and end effector assemblies disclosed herein.

In other instances, the firing member can include a single driving wedge aligned with the drivers **2240**, and the drivers **2240** can be mass balanced relative to the driving wedge. For example, the driving wedge can define a firing path that extends through the center of mass (COM) of each driver **2240**. In such instances, the driving wedge may have a greater width to increase the stability of the drivers **2240**. In other instances, the firing member can include three or more driving wedges, and the cumulative drive force exerted by the driving wedges can be balanced relative to the geometry of the driver **2240**.

Each rail **2245***a*, **2245***b* disclosed in FIG. **11** is aligned with one of the firing paths F_1, F_2. Specifically, the first rail **2245***a* is aligned with the first firing path F_1, and the second rail **2245***b* is aligned with the second firing path F_2. The driving wedges **2264***a*, **2264***b* are configured to contact the rails **2245***a*, **2245***b* to lift the drivers **2240** and the staples supported thereon. Referring still to FIG. **11**, the depicted driving wedges **2264***a*, **2264***b* are longitudinally staggered by a distance x. For example, the first wedge **2264***a* trails the second wedge **2264***b* by the distance x indicated in FIG. **11**. Additionally, the first rail **2245***a* is longitudinally staggered relative to the second rail **2245***b*. For example, the second rail **2245***b* is distally offset from the first rail **2245***a* by the distance y indicated in FIG. **11**. In the arrangement disclosed in FIG. **11**, the distance x equal, or substantially equals, the distance y, such that driving wedges **2264***a*, **2264***b* simultaneously contact and drive the rails **2245***a*, **2245***b*, respectively, during a firing stroke.

Because the driving wedges **2264***a*, **2264***b* disclosed in FIG. **11** simultaneously engage and drivingly lift the rails **2245***a*, **2245***b*, respectively, on either side of the center of mass (COM) of the driver **2240** and equidistant therefrom, the cumulative driving force is balanced throughout the entire deployment of the driver **2240**. As a result, torqueing and/or rotation of the driver **2240**, and thus of the staples supported thereon, may be prevented, minimized, and/or controlled. Longitudinally offset driving wedges, like the driving wedges **2264***a*, **2264***b*, for example, could be incorporated into other embodiments disclosed herein.

An arrangement of multi-staple drivers **2340***a* and single-staple drivers **2340***b* is disclosed in FIG. **12**. Because the arrangement of drivers **2340***a*, **2340***b* corresponds to the array **2011** of staples **2012** depicted in FIG. **7**, the drivers **2340***a*, **2340***b* can be used with the staple cartridge **2020** (FIG. **7**). Additionally or alternatively, the drivers **2340***a*, **2340***b* can be used with various other staple cartridges having a staple array that corresponds to the arrangement of drivers **2340***a*, **2340***b* depicted in FIG. **12**.

The drivers **2340***a*, **2340***b* include multiple troughs or staple supporting cradles **2342***a*, **2342***b*, **2342***c*. For example, the multi-staple drivers **2340***a* include a first cradle **2342***a* and a second cradle **2342***b*, which are each dimensioned and structured to support a staple, such as two of the staples **2012** shown in FIG. **7**. Additionally, the single-staple drivers **2340***b* include a third cradle **2342***c*, which is dimensioned and structured to support another staple, such as

another of the staples **2012** shown in FIG. **7**. For example, the base of a staple **2012** can reside in each cradle **2342***a*, **2342***b*, **2342***c*.

Referring again to the staple cartridge **2020** depicted in FIG. **7**, the first cradle **2342***a* can be aligned with a staple **2012** in the first outer row **2035** of staple cavities **2028**, the second cradle **2342***b* can be aligned with a staple **2012** in the intermediate row **2037** of staple cavities **2028**, and the third cradle **2342***c* can be aligned with a staple **2012** in the inner row **2033** of staple cavities **2028**. In such instances, the first cradle **2342***a* corresponds to an outer cradle, the second cradle **2342***b* corresponds to an intermediate cradle, and the third cradle **2342***c* corresponds to an inner cradle. Additionally, another driver arrangement can be positioned on the opposite side of the staple cartridge **2020**, which can be the mirror image of the driver arrangement disclosed in FIG. **12**.

Referring still to FIG. **12**, each cradle **2342***a*, **2342***b*, **2342***c* is defined into a step and/or support portion **2345**. Additionally, each of the drivers **2340***a*, **2340***b* includes a base **2348**, **2349**, respectively. The base **2348** of each multi-staple driver **2340***a* extends between the steps **2345** of the driver **2340***a*. Additionally, the base **2349** of each single-staple driver **2340***b* extends from the step **2345** thereof.

As disclosed in FIG. **12**, each driver **2340***a*, **2340***b* is aligned with a firing path F_1, F_2 within a staple cartridge. Specifically, each first driver **2340***a* is aligned with the first firing path F_1, and each second driver **2340***b* is aligned with the second firing path F_2. The depicted driving wedges **2364***a*, **2364***b* are configured to move along the firing paths F_1, F_2 during a firing stroke. Additionally, the driving wedges **2364***a*, **2364***b* contact the drivers **2340***a*, **2340***b*, respectively, to lift the drivers **2240***a*, **2340***b* and the staples supported thereon.

The bases **2348**, **2349** can act as counterweights to adjust and/or control the center of mass of the drivers **2340***a*, **2340***b*. For example, the geometry and material of each base **2348**, **2349** can be selected to maintain and/or shift the center of mass of each driver **2340***a*, **2340***b* into alignment with the corresponding firing path F_1, F_2. As depicted in FIG. **12**, the first bases **2348** include at least one cutout **2350**. The dimensions, placement, and geometry of the cutouts **2350** are selected to mass balance the first drivers **2340***a* relative to the first firing path F_1. For example, each first base **2348** can be configured to shift or maintain the center of mass of the multi-staple driver **2340***a* into alignment with the first firing path F_1, and each second base **2349** can be configured to shift the center of mass of the single-staple driver **2340***b* into alignment with the second firing path F_2.

Additionally, the bases **2348**, **2349** provide an elongated surface area for stabilizing the drivers **2340** when the driving wedges **2364***a*, **2364***b* drivingly engage the drivers **2340***a*, **2340***b*. For example, the larger footprint of the drivers **2340***a*, **2340***b* may promote stability and prevent torqueing and/or rotation of the drivers **2340***a*, **2340***b* during deployment. Moreover, because the bases **2348**, **2349** provide a larger surface area, the driving force can be distributed to promote a balanced driver and staple deployment. Drivers having elongated surface areas, such as the bases **2348**, **2349**, for example, could be incorporated into other embodiments disclosed herein.

Referring still to FIG. **12**, the depicted driving wedges **2364***a*, **2364***b* are longitudinally staggered by a distance x. For example, the first wedge **2364***a* trails the second wedge **2364***b* by the distance x. As further depicted in FIG. **12**, the depicted drivers **2340***a*, **2340***b* are longitudinally staggered by a distance y. In the depicted arrangement, the distance x is different than the distance y, such that the driving wedges **2364***a*, **2364***b* do not contact the drivers **2340***a*, **2340** simultaneously. For example, in the depicted arrangement, the first wedge **2364***a* contacts the first driver **2340***a* before the second wedge **2364***b* contacts the second driver **2340***b*. In such instances, deployment of the first driver **2340***a*, and thus movement of the first cradle **2342***a* and the second cradle **2342***c*, is initiated before deployment of the second staple **2340***b*, and thus movement of the third cradle **2342***c*. As a result, the staples aligned with the first driver **2340***a* are fired before the staples aligned with the second driver **2340***b*.

In certain instances, it is desirable to fire a staple or a group of staples before firing another staple or group of staples. For example, to control bleeding and/or fluid flow within the stapled tissue, staples positioned further inboard, such as the staples adjacent to the longitudinal slot, and thus, adjacent to the cut line, may be fired before staples further outboard.

In other instances, the staples aligned with the second driver **2340***b* can be fired before the staples aligned with the first driver **2340***a*. Alternatively, the first driver **2340***a* and the second driver **2340***b* can be fired simultaneously, such that the three staples supported by adjacent multi-staple and single staple drivers **2340***a*, **2340***b* pierce and capture tissue simultaneously.

An arrangement of dual-staple drivers **2440** is depicted in FIG. **13**. As arranged in FIG. **13**, the dual-staple drivers **2440** are configured to fire staples from a staple cartridge that has four adjacent rows of staple cavities. For example, the driver arrangement depicted in FIG. **13** can be configured to fire staples from four rows of staple cavities on one side of a longitudinal slot in a cartridge body, and a corresponding mirror image driver arrangement can be configured to fire staples from four rows of staple cavities on the other side of the longitudinal slot.

In other instances, a single row of dual-staple drivers **2440** can be positioned on a first side of the a staple cartridge, and a single row of dual-staple drivers **2440** can be positioned on a second, opposite side of the staple cartridge. In such instances, the dual-staple drivers **2440** can be arranged to fire staples from two adjacent rows of staple cavities on either side of a cut line. In other instances, rows of dual-staple drivers **2440** can be added to the arrangement shown in FIG. **13**. For example, the dual-staple drivers can be arranged to fire staples from six or more adjacent rows of staple cavities.

The dual-staple drivers **2440** depicted in FIG. **13** include a pair of troughs or staple supporting cradles **2442***a*, **2442***b*. For example, each dual-staple drivers **2440** includes a first cradle **2442***a* and a second cradle **2442***b*, which are dimensioned and structured to support a staple, such as one of the staples **2012** (FIG. **7**). For example, the base of a staple can be positioned in each cradle **2442***a*, **2442***b*.

The first cradle **2442***a* of one of the dual-staple drivers **2440** can be aligned with a staple in a row of staple cavities, and the second cradle **2442***b* of the same dual-staple driver **2440** can be aligned with a staple in another row of staple cavities. Additionally, the first cradle **2442***a* of another dual-staple driver **2440** can be aligned with a staple in another row of staple cavities, and the second cradle **2442***b* of that dual-staple driver **2440** can be aligned with a staple in yet another row of staple cavities.

Referring still to FIG. **13**, each dual-staple driver **2440** includes steps and/or support portions **2445**, and each cradle **2442***a*, **2442***b* is defined into one of the steps **2445**. Additionally, each of the drivers **2440** includes a base or connecting flange **2448** that extends between the steps **2445** of the dual-staple driver **2440**. Because the steps **2445** are

connected by the connecting flange **2448**, the cradles **2442***a*, **2442***b* are linked such that coordinated and/or synchronized staple deployment can be initiated by the dual-staple driver **2440**.

The steps **2445** of the drivers **2440** can be the same height. Alternatively, in some instances, a driver **2440** can include steps of different heights. In still other instances, different drivers **2440** can have steps of different heights, for example.

As disclosed in FIG. **13**, each dual-staple driver **2440** overlies a pair of firing paths. Specifically, one of the drivers **2440** overlies the first and second firing paths F_1, F_2, and another of the drivers **2440** overlies the third and fourth firing paths F_3, F_4. Multiple driving wedges **2464***a*, **2464***b*, **2464***b*, **2464***d* are also depicted in FIG. **13**. As shown in FIG. **13**, the driving wedges **2464***a*, **2464***b*, **2464***c*, **2464***d* are configured to contact the dual-staple drivers **2440** to lift the dual-staple drivers **2240** and the staples positioned thereon.

Referring still to FIG. **13**, each step **2445** includes a center of mass (COM). Additionally, each of the firing paths F_1, F_2, F_3, F_4 is aligned with a center of mass of a step **2045**. As a result, each step **2445** is mass balanced relative to the corresponding firing paths F_1, F_2, F_3, F_4.

In various instances, the base **2448** extending between the steps **2445** can also be mass balanced relative to the respective firing paths F_1, F_2, F_3, F_4, such that the base **2448** maintains the mass balance of the dual-staple driver **2440**. In some instances, the base **2448** can contribute an insignificant and/or negligible shift and/or variation to the mass balance of the dual-staple driver **2440**. In such instances, the mass balance of the drivers **2240** can be approximated by the mass balance of the steps **2445** thereof, for example.

Referring still to FIG. **13**, the depicted driving wedges **2464***a*, **2464***b* are longitudinally staggered by a distance x. For example, the first wedge **2464***a* trails the second wedge **2464***b* by the distance x. Additionally, the center of mass (COM) of the steps **2445** of each dual-staple driver **2440** are longitudinally staggered by the distance x. In such instances, the driving wedges **2464***a*, **2464***b* can move into engagement with the driver **2440** simultaneously. Because the wedges **2464***a*, **2464***c* contact each driver **2444** simultaneously, deployment of the pair of staples supported by each driver **2440** can be synchronized, and the staples can be simultaneously driven or fired into tissue. Longitudinally staggered wedges, like the wedges **2464***a*, **2464***b*, for example, could be incorporated into other embodiments disclosed herein.

In various instances, the geometry of a driving wedge can be selected, in combination with an arrangement of staples and drivers within a staple cartridge, to balance the forces exerted upon the staples and drivers during deployment. Additionally, in certain instances, the geometry of the driving wedge can be selected to coordinate the deployment of staples.

For example, a driver can include staggered and/or longitudinally offset driving wedges, which can be configured to simultaneously engage an angularly-oriented staple and/or an angularly-oriented driver within the staple cartridge. For example, staggered driving wedges can move into engagement with a first or proximal end of a driver and a second or distal end of the same driver at the same time. Because both ends of the angled driver are engaged by the staggered wedges simultaneously, the staggered driving wedges concurrently lift the driver. As a result, torqueing and/or rotation of the driver during deployment, and thus the staple supported thereon, may be prevented, limited, and/or controlled.

In other driverless embodiments, further described herein, staggered driving wedges can move into engagement with a first or proximal end of an angled staple and a second or distal end of the same angled staple at the same time. Because both ends of the angled staple are engaged by the staggered wedges simultaneously, the staggered driving wedges concurrently lift the staple. As a result, torqueing and/or rotation of the staple during deployment may be prevented, limited, and/or controlled.

Additionally or alternatively, the geometry of a driver can define at least one firing path that is aligned with non-angularly-oriented staples and/or drivers within the staple cartridge. For example, the firing path can be collinear with the axes of various drivers and staples that are oriented parallel to the longitudinal axis of the staple cartridge. Because the firing path is collinear with the staple and/or driver axis, the staple and/or driver can be balanced relative to the driving wedge, and torqueing and/or rotation of the driver and/or the staple can be prevented, limited, and/or controlled.

An arrangement of drivers **2540**, staples **2512***a*, **2512***b*, and driving wedges **2564***a*, **2564***b*, **2564***c* of a wedge sled **2558** is depicted in FIGS. **14** and **15**. The driving wedges **2564***a*, **2564***b*, **2564***c* disclosed in FIGS. **14** and **15** are configured to move along the firing paths F_1, F_2, and F_3 (FIG. **14**), respectively, which extend through a staple cartridge. In various instances, the arrangement of drivers **2540** can be utilized in a staple cartridge having an arrangement of staples **2512***a*, **2512***b* and staple cavities that corresponds to the depicted driver arrangement.

As disclosed in FIG. **14**, the drivers **2540** and the staples **2512***a*, **2512***b* are arranged in multiple rows **2534**, **2536**. Additionally, various drivers **2540** and staples **2512***a* in each row are oriented parallel to a longitudinal axis L, and various drivers **2540** and staples **2512***b* in each row are oriented at an angle relative to the longitudinal axis L. For example, the depicted arrangement includes a pair of longitudinal rows **2534**, **2536**, and the drivers **2540** and staples **2512***a*, **2512***b* in each row **2534**, **2536** alternate between a parallel orientation and an angled orientation relative to the longitudinal axis L. For example, the drivers **2540** shown in the first row **2534** include a first driver **2540***a* angularly-oriented relative to the longitudinal axis L, a second driver **2540***b* oriented parallel to the longitudinal axis L, a third driver **2540***c* angularly-oriented relative to the longitudinal axis L, and a fourth driver **2540***d* oriented parallel to the longitudinal axis L.

As disclosed in FIG. **14**, the second driver **2540***b* and the fourth driver **2540***d* of the first row **2534** are aligned with the first firing path F_1. More particularly, both the proximal ends **2546** and the distal ends **2544** of the second and fourth drivers **2540***b*, **2540***d* are aligned with the first firing path F_1. In such instances, the first firing path F_1 extends through the center of masses (COM) of the second driver **2540***b* and the fourth driver **2540***d*. Because the first firing path F_1 is aligned with the second and fourth drivers **2540***b*, **2540***d*, the second and fourth drivers **2540***b*, **2540***d* are mass balanced relative to the first firing path F_1 and torqueing and/or rotation of the second and fourth drivers **2540***b*, **2540***d* shown in FIG. **14**, and thus the staples supported thereon, may be prevented, limited, and/or controlled.

As disclosed in FIG. **14**, the first driver **2540***a* is aligned with an axis A, which traverses the longitudinal axis L and the firing paths F_1, F_2, and F_3. Additionally, the third driver **2540***c* is oriented parallel to the axis A. As depicted in FIG. **14**, the first and third drivers **2540***a*, **2540***c* are oriented at an angle relative to the longitudinal axis L and overlie multiple firing paths. For example, the depicted first and third drivers **2540***a*, **2540***c* overlie the first and second firing paths F_1, F_2.

As depicted in FIG. **14**, the first firing path F_1 extends through the proximal ends **2546** of the first and third drivers **2540***a*, **2540***c*, and the second firing path F_2 extends through the distal ends **2544** of the first and third drivers **2540***a*, **2540***c*.

The center of masses (COM) of the first and second drivers **2540***a*, **2540***c* are intermediate the first firing path F_1 and the second firing path F_2. For example, the center of masses of the first and second drivers **2540***a*, **2540***c* are equidistant from the first firing path F_1 and the second firing path F_2, and thus, the drivers **2540***a*, **2540***c* are mass balanced relative to the first and second firing paths F_1, F_2. As a result, torqueing and/or rotation of the second and fourth drivers **2540***b*, **2540***d* shown in FIG. **14**, and thus the staples supported thereon, may be prevented, limited, and/or controlled.

Additionally, the driving wedges **2564***a*, **2564***c*, **2564***c* shown in FIGS. **14** and **15** are longitudinally staggered. For example, the first driving wedge **2564***a* distally trails the second driving wedge **2564***b* by a distance x and the second driving wedge **2564***b* distally trails the third driving wedge **2564***c* by the distance x. As depicted in FIG. **14**, the proximal end **2546** and the distal end **2544** of the angularly-oriented third driver **2540***c* are offset by a longitudinal distance y. In the arrangement depicted in FIGS. **14** and **15**, the longitudinal distance y between the proximal end **2546** and the distal end **2544** of third driver **2540***c* equals the longitudinal distance x between the first driving wedge **2564***a*, which is aligned with the proximal end **2546** of the third driver **2540***c*, and the second driving wedge **2564***b*, which is aligned with the distal end **2544** of the third driver **2540***c*.

In the arrangement disclosed in FIGS. **14** and **15**, the first driving wedge **2564***a* and the second driving wedge **2564***b* moves into engagement with the third driver **2540***c* simultaneously. For example, the first driving wedge **2564***a* contacts the proximal end **2546** of the third staple driver **2540***c* as the second driving wedge **2564***b* contacts the distal end **2544** of the third staple driver **2540***c*. Because the driving wedges **2564***a*, **2564***b*, **2564***c* depicted in FIG. **14** are configured to engage the ends of the angled drivers, the lifting force is applied directly below the legs of the staple that is supported on the angled third driver **2540***c*. As a result, the staple legs are further stabilized, and tilting and/or tipping of the staples legs during deployment can be prevented, minimized, and/or controlled.

The first and second driving wedges **2564***a*, **2564***b* shown in FIGS. **14** and **15** are configured to similarly engage additional drivers **2540** in the first row **2534**, and can sequentially deploy the staples **2512***a*, **2512***b* supported thereon. For example, the first driving wedge **2564***a* is configured to subsequently contact the proximal end **2546** of the first driver **2540***a* as the second driving wedge **2564***b* contacts the distal end **2544** of the first driver **2440***a*. Additionally, the first driving wedge **2564***a* is configured to sequentially engage and fire the parallel drivers **2540***b*, **2540***d* and staples **2512***a* in the first row **2534**.

In various instances, the proximal end **2546** and the distal end **2544** of the third driver **2540***c* can be equidistant from the center of mass of the third driver **2540***c*. Because the driving wedges **2464***a* and **2464***b* disclosed in FIGS. **14** and **15** are configured to simultaneously contact the opposing ends of the angularly-oriented third staple driver **2540***c* and to exert a driving and/or lifting force on the opposing ends of the staple driver **2540***c* equidistant from the center of mass, the staple driver **2540***c* is balanced throughout its deployment. As a result, rotation and/or torqueing of the third staple driver **2540***c* may be prevented, avoided, and/or controlled.

In other instances, the driving wedges **2564***a*, **2564***b* may not contact the ends **2546**, **2544** of the angled staple drivers **2540**. In such instances, however, the driving wedges **2564***a*, **2564***b* may be configured to engage the angled staple drivers **2540** at a location that is equidistant from the center of mass of the driver **2540**. Moreover, the driving wedges **2564***a*, **2564***b* can be sufficiently offset to simultaneously contact and lift the spaced locations of the driver **2540***c*.

Additionally, the second and third driving wedges **2564***b*, **2564***c* shown in FIGS. **14** and **15** are configured to similarly engage the drivers **2540** in the second row **2536** and sequentially deploy the staples **2512***a*, **2512***b* supported thereon. Referring still to the arrangement depicted in FIG. **14**, for example, the drivers **2540** in the second row **2536** are oriented at an angle such that the distance between the proximal end **2546** and the distal end **2544** of each driver is also separated by the longitudinal distance y, which equals the longitudinal distance x between the second driving wedge **2564***b* and the third driving wedge **2564***c*.

In other instances, the longitudinal distance between the second driving wedge **2564***b* and the third driving wedge **2564***c* can be greater than and/or less than the longitudinal distance between the first driving wedge **2564***a* and the second driving wedge **2564***b*. Additionally or alternatively, the angled staples **2512***b* in the second row **2536** can be oriented at a different angle than the angled staples **2512***b* in the first row **2534**. Moreover, in various instances, additional rows of drivers **2540** and staples **2512***a*, **2512***b* can be added to the arrangement depicted in FIG. **14**, and additional driving wedges can be configured to engage the additional drivers **2540** to fire the additional staples **2512***a*, **2512***b*. In still other instances, the arrangement can further include a single row of drivers **2540** and staples **2512***a*, **2512***b*, for example.

The arrangement of staples **2512***a*, **2512***b* depicted in FIG. **14** can also be fired from a driverless staple cartridge. For example, referring to FIG. **16**, the staples **2512***a*, **2512***b* can be arranged within a driverless cartridge, such as the staple cartridge **2620** (FIG. **37**), for example, which is further described herein. The staples **2512***a*, **2512***b* in a driverless staple cartridge can be directly engaged and/or driven by a sled and/or a firing member. For example, the staples **2512***a*, **2512***b* can include a sled-engagement surface, which is configured to be directly engaged by a staple-engagement surface of one or more of the driving wedges **2564***a*, **2564***b*, and/or **2564***c* of the wedge sled **2558**.

As described herein, each staple **2512***a*, **2512***b* can be mass balanced relative to the firing path(s) F_1, F_2, F_3 that is/are aligned with the staple **2512***a*, **2512***b*. For example, referring to FIGS. **16**, the staples **2512***a*, which are arranged parallel to the longitudinal axis L, are aligned with one of the firing paths F_1, F_2, F_3. In the depicted arrangement, one of the driving wedges **2564***a*, **2564***b*, **2564***c* drivingly engages the parallel staples **2512***a* along the length of the base of the staple **2512***a*. Additionally, the center of mass of each parallel staple **2512***a* is aligned with one of the firing paths F_1, F_2, F_3. Stated differently, one of the firing paths F_1, F_2, F_3 extends through the center of mass of each parallel staple **2512***a*, and thus, the staples **2512***a* are mass balanced relative to the respective firing path F_1, F_2, F_3 during deployment. In such an arrangement, torqueing and/or rotation of the staples **2512***a* during firing can be prevented, minimized, and/or controlled.

Additionally, where the staple arrangement depicted in FIG. **14** is utilized in a driverless cartridge, a pair of offset driving wedges **2564***a*, **2564***b*, **2564***c* is configured to simultaneously move into engagement with each angularly-oriented staple **2512***b*. For example, the first and second driving wedges **2564***a*, **2564***b* are configured to simultaneously contact an angled staple **2512***b* in the first row **2534**, and the second and third driving wedges **2564***b*, **2564***c* are configured to simultaneously contact an angled staple **2512***b* in the second row **2536**. Thereafter, the wedge sled **2558** is configured to continue to translate relative to the staples **2512***a*, **2512***b*, to sequentially contact and directly drive the staples **2512***a*, **2512***b* from the driverless staple cartridge.

As described herein, a driverless staple cartridge can be employed to hold and fire a staple array that includes angularly-oriented staples. An end effector assembly **2600** including the first jaw **2002**, the second jaw **2004**, the frame **2006**, the articulation joint **2009**, and a driverless staple cartridge **2620** is disclosed in FIG. **37**. The staple cartridge **2620** can be a single-use and/or disposable cartridge, which can be replaced with another staple cartridge after firing. FIG. **37** discloses a staple cartridge **2620** that includes a deck **2626**, a cartridge body **2624**, and a casing **2622**, which partially surrounds or encloses the cartridge body **2624**. Additionally, an array of staples, such as the staples **2612** (FIGS. **39**A and **39**B), for example, can be removably positioned in the cartridge body **2624**.

In certain instances, the staple cartridge **2620** can be integrally formed with the end effector assembly **2600** and/or can be permanently fixed within one of the jaws **2002**, **2004**, for example. In such instances, the end effector assembly **2600** can be a single-use and/or disposable end effector. In other instances, the staple cartridge **2620** can be fixed to the end effector assembly **2600**, and may be reloaded with additional staples for subsequent firings, for example.

Referring to the staple cartridge **2620** depicted in FIG. **37**, a longitudinal slot **2632** is defined at least partially though the cartridge body **2624**. The longitudinal slot **2632** extends along a longitudinal axis L, which extends between a proximal end **2623** and a distal end **2625** of the cartridge body **2624**. The longitudinal slot **2632** shown in FIG. **37** extends from the proximal end **2623** toward the distal end **2625** and traverses a portion of the length of the cartridge body **2624**.

In some instances, the longitudinal slot **2632** can traverse the entire length of the cartridge body **2624**. In other instances, the longitudinal slot **2632** can extend from the distal end **2623** toward the proximal end **2625**, for example. In still other instances, the cartridge body **2624** may not include a predefined and/or preformed longitudinal slot. For example, a firing member and/or a cutting element can transect and/or cut the cartridge body **2624** during the firing stroke, for example.

The staple cartridge **2620** disclosed in FIG. **37** is configured to fire an array of angled staples **2612** (FIGS. **38**A and **38**B), which can be oriented like the staple array **2011** shown in FIG. **7**, for example. The angled staples **2612** can be removably positioned in angled staple cavities **2628**, shown in FIG. **37**, which are defined into the cartridge body **2624**. For example, the depicted staple cavities **2628** are angularly-oriented relative to the longitudinal axis L. Additionally, the depicted arrangement of staple cavities **2628** corresponds to the arrangement of staples **2612** positioned in the cartridge **2620**. Each staple cavity **2628** shown in FIG. **37** includes an opening **2630** in the deck **2626**, and each opening **2630** includes a proximal end and a distal end. A staple axis can extend between the proximal end and the distal end, and the staple axis of the openings **2630** shown in FIG. **37** are skewed and/or angled relative to the longitudinal axis L of the cartridge body **2624**. In the staple cartridge **2620** of FIG. **37**, all the staple cavities **2628** are angularly-oriented relative to the longitudinal axis L and various staple cavities **2628** are angularly-oriented relative to other staple cavities **2628**.

The staple cavities **2628** depicted in FIG. **37** are arranged in multiple rows on each side of the longitudinal slot **2632**. For example, the staple cavities **2628** are arranged in a first inside row **2633**, a first outside row **2635**, and a first intermediate row **2637** on a first side **2627** of the longitudinal slot **2632**, and staple cavities **2628** are arranged in a second inside row **2634**, a second outside row **2638**, and a second intermediate row **2636** on a second side **2629** of the longitudinal slot **2632**. Though the staple cavities **2628** do not cross or otherwise contact each other, the longitudinal rows **2633**, **2634**, **2635**, **2636**, **2637**, **2638** of staple cavities **2628** overlap. For example, a staple cavity **2628** extends laterally outboard and/or inboard past the staple cavity **2628** in an adjacent row of staple cavities **2628**, and a staple cavity **2628** extends proximally and/or distally past the staple cavity **2628** in an adjacent row of staple cavities **2628**. Because the staple cavities **2628** and the staples positioned therein are arranged in an overlapping array, bleeding and/or fluid flow in the stapled tissue can be controlled. In the staple cartridge **2620** depicted in FIG. **37**, the staple cavities **2628** and rows thereof are symmetrical relative to the longitudinal slot **2632**.

In other instances, greater than or fewer than three rows of staple cavities **2628** can be positioned on each side of the longitudinal slot **2632** and, in some instances, one of the sides **2627**, **2629** of the staple cartridge **2620** can include a different number of rows of staple cavities **2628** than the other side **2627**, **2629** of the staple cartridge **2620**. In some instances, the staple cavities **2628** may not longitudinally and/or laterally overlap the staple cavities **2628** in adjacent rows. Additionally or alternatively, in certain instances, the staple cavities **2628** and/or the rows thereof can be asymmetrical relative to the longitudinal slot **2632** and/or the longitudinal axis L.

Referring still to FIG. **37**, the depicted staple cavities **2628** in each longitudinal row are parallel or substantially parallel. In other words, the staple cavities **2628** in the first inside row **2633** are parallel to each other, the staple cavities **2628** in the first outside row **2635** are parallel to each other, the staple cavities **2628** in the first intermediate row **2637** are parallel to each other, the staple cavities **2628** in the second inside row **2634** are parallel to each other, the staple cavities **2628** in the second outside row **2636** are parallel to each other, and the staple cavities **2628** in the second intermediate row **2638** are parallel to each other.

As also depicted in FIG. **37**, the staple cavities **2628** in each longitudinal row are angularly-oriented relative to the staple cavities **2628** in the adjacent longitudinal row(s) on the same side of the longitudinal slot **2632**. For example, on the first side **2627** of the cartridge body **2624**, the staple cavities **2628** in the first intermediate row **2637** are angularly-oriented relative to the staple cavities **2628** in the first inner row **2633** and in the first outer row **2635**. Additionally, on the second side **2629** of the cartridge body **2624**, the staple cavities **2628** in the second intermediate row **2638** are angularly-oriented relative to the staple cavities **2628** in the second inner row **2634** and the second outer row **2636**.

In other instances, only a portion of the staples cavities **2628** in each longitudinal row **2633**, **2634**, **2635**, **2636**,

2637, 2638 may be parallel to each other and/or less than all of the longitudinal rows 2633, 2634, 2635, 2636, 2637, 2638 can include staple cavities 2628 that are parallel to each other. Additionally or alternatively, in certain instances, at least a portion of the staple cavities 2628 can be randomly oriented. In some instances, at least one of the staple cavities 2628 in a longitudinal row 2633, 2634, 2635, 2636, 2637, 2638 can be parallel to at least one of the staple cavities 2628 in an adjacent longitudinal row 2633, 2634, 2635, 2636, 2637, 2638. In certain instances, a staple cartridge 2620 can include at least one staple cavity 2628 that is parallel to the longitudinal axis L of the cartridge body 2624. See, for example, FIG. 11.

Referring still to FIG. 37, the depicted end effector assembly 2600 includes a firing bar 2660 movably positioned relative to the cartridge body 2624. The firing bar 2660 is configured to traverse the cartridge body 2624 to fire the staples 2612 (FIGS. 38A and 38B) from the staple cavities 2628. The depicted firing bar 2660 further includes a cutting edge 2661, which is configured to incise tissue as the firing bar 2660 translates between the first jaw 2002 and the second jaw 2004.

The depicted firing member 2660 is dimensioned and positioned to fit within the longitudinal slot 2632, and to drivingly engage a sled, such as a sled 2658 (FIGS. 37-38B), a sled 2758 (FIGS. 39-39B) or a sled 2858 (FIG. 40) movably positioned within the driverless cartridge 2620. As the firing bar 2660 translates through the longitudinal slot 2632, the firing bar 2660 moves the sled 2658 (FIGS. 37-38B), 2758 (FIGS. 39-39B), or 2858 (FIG. 40) through the cartridge body 2624.

The sled 2658 is disclosed in FIGS. 37-38B. The sled 2658 is dimensioned and positioned to directly engage the staples 2612 positioned in the driverless cartridge 2620 (FIG. 37). The depicted sled 2658 includes a central portion 2659 and driving wedges or driving rails 2664. The driving wedges 2664 include a staple-engagement or staple-contacting surface 2666, which are inclined and/or ramped surfaces extending from a distal end to a proximal end of the sled 2658. As depicted in FIGS. 37-38B, the inclined surfaces 2666 of the wedges 2664 have equal, or substantially equal, incline degrees or angles.

Each staple-contacting surface 2666 shown in FIGS. 37-38B is positioned to directly contact the staples 2612 (FIGS. 38A and 38B) positioned in the staple cartridge 2620. More particularly, the staple-contacting surfaces 2666 of the driving wedges 2664 are configured to contact the base 2614 (FIG. 38B) of each staple 2612, and to lift the base 2614 of the staple 2612 upward to eject the staple 2612 from the staple cavity 2628. For example, to lift the staples 2612 from lowered and/or unfired positions to lifted and/or fired positions, the distal end 2667 of each inclined surface 2666 engages the base 2614 of the staple 2612, and the inclined surface 2666 moves distally across the base 2614 of the staple 2612.

In the depicted arrangement, the firing bar 2660 and the cutting edge 2661 thereof are configured to slide and/or translate within the longitudinal slot 2632. Additionally, the driving wedges 2664 depicted in FIGS. 37-38B, which are shown laterally outboard of the firing bar 2660 and the cutting edge 2661, and configured to contact the staples 2612 (FIGS. 38A and 38B) positioned in the staple cavities 2628 (FIG. 37). Multiple driving wedges 2664 are positioned on either side of the central portion 2659 of the wedge sled 2658. For example, in the depicted sled 2658, four driving wedges 2664*a*, 2664*b*, 2664*c*, 2664*d* are positioned on each side of the central portion 2659.

Moreover, in the arrangement disclosed in FIGS. 37-38B, multiple driving wedges 2664*a*, 2664*b*, 2664*c*, 2664*d* are configured to engage a single angled staple 2612. For example, the first and second wedges 2664*a*, 2664*b* are configured to engage staples 6212 positioned in the first outer row 2633 of staple cavities 2628, the second and third wedges 2664*b*, 2664*c* are configured to engage staples 2612 positioned in the first intermediate row 2637, and the third and fourth wedges 2664*c*, 2664*d* are configured to engage staples 2612 positioned in the first outer row 2635.

In various circumstances, it is desirable to support and drive staples 2612 in the staple cartridge 2620 disclosed in FIG. 37 from multiple positions along the base 2614 (FIG. 38B) of the staple 2612. For example, staples 2612 that are longitudinally aligned with a firing path of a driving wedge 2664 are supported along the entire length of the base 2614 of the staple 2612. For example, when staples 2612 are angled relative to the firing paths of the sled 2658, as depicted in FIGS. 37-38B, the staples 2612 can be supported at multiple locations along the base by utilizing multiple driving wedges 2664. Because the angled staples 2612 are drivingly supported at multiple locations along the base 2614 thereof, the staples 2612 can be balanced and/or stabilized such that rotation and/or torqueing of the staples 2612 during deployment may be prevented, reduced, and/or controlled. Direct drive staples that are mass balanced relative to multiple sled-engagement surfaces, like the staples 2612, for example, could be incorporated into other embodiments disclosed herein.

The inclined surfaces 2666 disclosed in FIGS. 37-38B are staggered. For example, the depicted inclined surfaces 2666 are longitudinally staggered such that at least one inclined surface 2666 longitudinally leads at least one other inclined surface 2666. The inclined surfaces 2666 of the second and fourth driving wedges 2664*b*, 2664*d* longitudinally lead the inclined surfaces 2666 of the first and third driving wedges 2664*a*, 2664*c*. The inclined surfaces 2666 of the second and fourth driving wedges 2664*b*, 2664*d* are taller than the inclined surfaces 2666 of the first and third driving edges 2664*a*, 2664*c* at the aligned distal ends 2667. For example, as shown in FIGS. 38 and 38B, the first and third driving wedges 2664*a*, 2664*c* have a distal height y and the second and fourth driving wedges 2664*b*, 2664*d* have a distal height x, which is less than the height y.

The longitudinally staggered inclined surfaces 2666 are configured to move into engagement with the angled staples 2612 simultaneously. For example, the staple-engagement surfaces 2666 of the first and second wedges 2664*a*, 2664*b* are configured to simultaneously engage angled staples 2612 in the first outer row 2633 (FIG. 37) of staple cavities 2628. Additionally, the staple-engagement surfaces 2666 of the second and third wedges 2664*b*, 2664*c* are configured to simultaneously engage angled staples 2612 in the first intermediate row 2637 (FIG. 37). Moreover, the staple-engagement surfaces 2666 of the third and fourth wedges 2664*c*, 2664*d* are configured to simultaneously engage staples 2612 positioned in the first outer row 2635 (FIG. 37).

The deployment or firing of a staple 2612 is depicted in FIGS. 38A and 38B, in which the third and fourth wedges 2664*c*, 2664*d* of the driver 2658 are in driving engagement with the staple 2612. The third wedge 2664*c* can initially contact the staple 2612 at point A and the fourth wedge 2664*d* can initially contact the staple 2612 at point B. The third and fourth wedges 2664*c*, 2664*d* are configured to engage the staple 2612 simultaneously such that the staple 2612 contacts points A and B concurrently or nearly concurrently. Because of the height difference between the

staple-engagement surfaces **2666** of the third and fourth wedges **2664***c*, **2664***d*, points A and B can be longitudinally offset such that points A and B are at the same, or essentially the same, elevation.

Referring still to FIGS. **38**A and **38**B, as the driver **2658** continues to move distally in the staple cartridge **2620**, the staple **2612** can slide up the staple-engagement surfaces **2666** of the third and fourth wedges **2664***c*, **2664***d* to points A' and B' on the third and fourth wedges **2664***c*, **2664***d*, respectively. As shown in FIG. **38**B, the staple **2612** maintains a vertically upright orientation during deployment. Thereafter, the staple **2612** can continue to slide up the staple-engagement surfaces **2666** of the third and fourth wedges **2664***c*, **2664***d* to points A" and B" on the third and fourth wedges **2664***c*, **2664***d*, respectively. As shown in FIG. **38**B, the staple **2612** continues to maintain a vertically upright orientation. In other words, the pair of staple-engagement surfaces **2666** stabilize and/or balance the staple **2612** during deployment, such that rotation or torqueing of the staples **2612** may be prevented, minimized and/or controlled.

In other instances, the driving wedges or rails of a wedge sled can all decline to a height of zero, or essentially zero. For example, referring now to FIGS. **39**-**39**B, the wedge sled **2758** is depicted. The wedge sled **2758** can be employed in the staple cartridge **2620** and the end effector **2600** (FIG. **37**) to fire staples **2612** from the staple cartridge **2620** (FIG. **39**A).

Similar to the sled **2658**, the wedge sled **2758** disclosed in FIGS. **39**-**39**B includes four driving wedges **2764** on either side of a central portion **2759**. Each driving wedge **2764** includes an inclined, staple-engagement surface **2766**, which is configured to directly engage and drive the staples **2612** from the staple cavities **2628**. Also similar to the sled **2658**, the staple-engagement surfaces **2766** of the driving wedges **2764** depicted in FIGS. **39**-**39**B are longitudinally staggered, such that the first and third driving wedges **2764***a*, **2764***c* longitudinally trail the second and fourth driving wedges **2764***b*, **2764***d*.

The longitudinally staggered inclined surfaces **2766** of the driving wedges **2764***a*, **2764***b*, **2764***c*, **2764***d* disclosed in FIGS. **39**-**39**B are configured to move into engagement with angled staples **2612** simultaneously. For example, the staple-engagement surfaces **2766** of the first and second wedges **2764***a*, **2764***b* are configured to simultaneously engage angled staples **2612** positioned in the first outer row **2635** (FIG. **37**). Additionally, the staple-engagement surfaces **2766** of the second and third wedges **2764***b*, **2764***c* are configured to simultaneously engage angled staples **2612** positioned in the first intermediate row **2637** (FIG. **37**). Moreover, the staple-engagement surfaces **2766** of the third and fourth wedges **2764***c*, **2764***d* are configured to simultaneously engage angled staples **2612** positioned in the first inner row **2633** (FIG. **37**).

Additionally, the longitudinally staggered inclined surfaces **2666** of the driving wedges **2764***a*, **2764***b*, **2764***c*, **2764***d* disclosed in FIGS. **39**-**39**B are configured to drive the angled staples **2612** simultaneously. For example, the staple-engagement surfaces **2766** of the first and second wedges **2764***a*, **2764***b* are configured to simultaneously drive angled staples **2612** in the first outer row **2635** of staple cavities **2628** (FIG. **37**). Additionally, the staple-engagement surfaces **2766** of the second and third wedges **2764***b*, **2764***c* are configured to simultaneously drive angled staples **2612** positioned in the first intermediate row **2637** (FIG. **37**). Moreover, the staple-engagement surfaces **2766** of the third and fourth wedges **2764***c*, **2764***d* are configured to simultaneously drive angled staples **2612** positioned in the first inner row **2633** (FIG. **37**).

Referring primarily to FIG. **39**A, the second wedge **2764***b* and the third wedge **2764***c* on the first side **2627** of the cartridge body **2624** are configured to move into engagement with the second staple **2612***b*, which is the proximal most staple and is aligned with the firing paths of the second wedge **2764***b* and the third wedge **2764***c*. Additionally, the second wedge **2764***b* and the third wedge **2764***c* can be equidistant from the center of mass (COM) of the second staple **2612***b*. As the sled **2758** continues to translate distally, the second wedge **2764***b* and the third wedge **2764***c* are configured to drivingly engage the second staple **2612***b* to lift and fire the staple **2612***b*.

In the arrangement disclosed in FIG. **39**A, as the second wedge **2764***b* and the third wedge **2764***c* lift the second staple **2612***b*, the first wedge **2764***a* and the second wedge **2764***b* on the first side **2627** of the cartridge body **2624** are configured to move into engagement with the first staple **2612***a* and the third wedge **2764***c* and the fourth wedge **2764***d* on the first side **2627** are configured to move into engagement with the third staple **2612***c*. Additionally, as depicted in FIG. **39**A, the first wedge **2764***a* and the second wedge **2764***b* are equidistant from the center of mass (COM) of the first staple **2612***a*, and the third wedge **2764***c* and the fourth wedge **2764***d* are equidistant from the center of mass (COM) of the third staple **2612***c*. As the sled **2758** continues to translate distally, the first wedge **2764***a* and the second wedge **2764***b* drivingly engage the first staple **2612***a* to lift and fire the staple **2612***b*, and the third wedge **2764***c* and the fourth wedge **2764***d* drivingly engage the third staple **2612***c* to lift and fire the staple **2612***c*.

The paired driving wedge arrangement described above and depicted in FIG. **39**A is configured to continue simultaneously engaging and lifting the staples **2612** in the staple cartridge **2620** as the sled **2758** continues to translate distally. Because the sled **2758** supports each staple **2612** at multiple locations along the base thereof, the staples **2612** are stabilized and/or balanced during deployment. Additionally, because the staple-engagement surfaces **2766** of the sled **2758** are equidistant from the center of mass (COM) of each contacted staple **2612**, rotation and/or torqueing of the staples **2612** may be further prevented, minimized, or controlled. Moreover, because the driving wedges **2764***a*, **2764***b*, **2764***c*, **2764** are longitudinally staggered, the engagement of the multiple driving wedges **2764***a*, **2764***b*, **2764***c*, **2764** with each staple **2612** is timed and/or synchronized to balance the driving forces exerted on each staple **2612** throughout its deployment.

The driving sled **2858** is depicted in FIG. **40**. The wedge sled **2758** can be employed in the staple cartridge **2620** and the end effector **2600** (FIG. **37**) to fire staples **2612** from the staple cavities **2620** (FIG. **39**A). Similar to the sleds **2658** and **2758**, the driving sled **2858** includes multiple driving wedges **2864** on either side of a central portion **2859**. Each driving wedge **2864** includes an inclined, staple-engagement surface **2866**, which is configured to directly engage and drive the staples **2612** from the staple cavities **2628**. Moreover, the inclined, staple-engagement surfaces **2866** are angled or sloped laterally. Because the staple-engagement surfaces **2866** are laterally and longitudinally sloped, each surface **2866** includes longitudinally offset support portions, which drivingly engage the angled staples **2612** throughout the deployment and firing thereof.

For example, the sloped staple-engagement surfaces **2866** disclosed in FIG. **40** are configured to drivingly engage the

staples **2612** along a portion of the base of each staple **2612**. In the arrangement depicted in FIG. **40**, the driving force exerted on the staple **2612** is distributed over a larger surface area. For example, a staple-engagement surface **2866** can contact at least 50% of the length of the base of the staple **2612**. In other instances, the staple engagement-surface can contact at least 75% of the length of the base of the staple **2612**. In still other instances, the staple engagement-surface can contact less than 50% or more than 75% the length of the base of the staple **2612**. Moreover, the driving force from the sled **2858** is balanced relative to center of mass of each staple **2612** to further stabilize and balance the staple **2612** during deployment. As a result, rotation and/or torqueing of the staple **2612** may be prevented, minimized, or controlled.

As described herein, a staple array that includes staples angularly-oriented relative to the longitudinal axis of the staple cartridge and/or the firing path of the firing member provides various benefits. For example, such a staple array can provide improved flexibility and/or stretchability within stapled tissue. As a result, incidences of tissue tearing can be reduced. In certain instances, a staple array can also include staples with different length bases. The variable length bases within a staple array can promote increased flexibility and/or stretchability in stapled tissue. Additionally, in certain arrangements, staples having shorter bases can nest within the staple array. For example, the staples having shorter bases can be positioned in narrower spaces between staples having longer bases. Such an arrangement can densify the staple line, which can improve control of bleeding and/or fluid flow in the stapled tissue.

A staple array **3011** is depicted in FIG. **41**. The array **3011** includes long staples **3012** and short staples **3013**. As shown in FIG. **41**, the long staples **3012** have a base length of l_1, and the short staples **3013** have a base length of l_2, which is less than l_1. In the depicted array **3011**, a first long staple **3012***a* is aligned with an axis A_a, and a first short staple **3013** is aligned with an axis A_b, which is parallel to the axis A_a. Additional long and short staples **3012**, **3013**, such as staples **3012***e*, **3013***b*, **3013***c*, and **3013***d*, for example, are parallel to the axes A_a and A_b. As further disclosed in the array **3011** shown in FIG. **41**, a second long staple **3012** is aligned with an axis A_c, which traverses the axes A_a and A_b. Additional long staples **3012**, such as staples **3012***c*, **3012***d*, and **3012***f*, for example, are parallel to the axis A_c.

In other arrangements, additional short staples **3012** can also be parallel to the axis A_c. In some instances, various staples can be arranged along axes that are non-parallel to axes A_a, A_b and A_c. For example, the staple array **3011** can include staples that are oriented parallel to the longitudinal axis of the staple cartridge and/or to the firing path of a driving sled. Additionally, in various instances, the staple array **3011** can include staples having base lengths that are different than l_2 and l_1. In some instances, the staple array **3011** can include additional and/or fewer longitudinal rows of staples **3012**, **3013**. For example, the row of long staples **3012** aligned with the first long staple **3012***a* can be removed, and/or the row of long staples **3012** aligned with the second long staple **3012***b* can be removed, and/or the row of short staples aligned with first short staple **3013***a* can be removed, and/or the row of long staples **3012** aligned with the third long staple **3012***c* can be removed, and/or the row of short staples **3013** aligned with the second short staple **3013***b* can be removed, and/or the row of long staples **3013** aligned with the fourth long staple **3012***d* can be removed.

Referring again to FIG. **41**, a short staple **3013** is embedded in the staple array **3011** intermediate two long staples **3012**. For example, two long staples **3012** in the array **3011**, such as the third long staple **3012***c* and the sixth long staple **3012***f* shown in FIG. **41**, are parallel and laterally aligned. In such an arrangement, a space is defined between the third and sixth long staples **3012***c* and **3012***f*, and the space is configured to accommodate the third short staple **3013***c*. Accordingly, the third short staple **3013***c* in the depicted array **3011** is nestled between the third long staple **3012***c* and the sixth long staple **3012***f*. In such an arrangement, the third short staple **3013***c*, and similarly placed shorts staples **3013** in the array **3011**, can densify the staple line by filling the spaces between the long staples **3012**. In various instances, bleeding and/or fluid flow control is improved because the staple line is densified in the array **3011**. Densified staple lines, like the staple array **3011**, for example, could be incorporated into other embodiments disclosed herein.

In other instances, the long staples **3012** defining a space therebetween for accommodating a short staple can be non-parallel to each other. For example, the third and sixth long staples **3012***c*, **3012***f* can be skewed and/or otherwise non-parallel to each other. Additionally or alternatively, the long staples **3012** defining the space therebetween for accommodating a short staple **3013** can only partially laterally overlap. For example, in certain instances, the third long staple **3012***c* can be laterally outboard or laterally inboard relative to the sixth long staple **3012***f*, such that only a portion of the third and sixth staples **3012***c*, **3012***f* are laterally aligned.

An array of staples, such as the array **3011**, for example, can be positioned in a driverless staple cartridge, such as the driverless staple cartridge **2620** (FIG. **37**), for example, and can be directly engaged and driven from the staple cartridge by a driving sled. In such instances, the staples **3012**, **3013** in the array **3011** can be mass balanced relative to the driving wedges of a sled that contacts and drives the staples **3012**, **3013**. For example, the driving wedges can apply the firing force at the ends of the staple bases equidistant from the center of mass of each staple **3012**, **3013**. In other instances, the firing force can be applied at various spaced locations along the base of a staple **3012**, **3013**, and the cumulative firing force can be balanced relative to the staple **3012**, **3013**. In instances where a staple does not overlie a firing path and/or is not balanced relative to the firing path, a staple driver may be employed. For example, a multi-staple driver, as further described herein, can simultaneously lift multiple staples from a staple cartridge.

A staple array **3111** is depicted in FIG. **42**. The array **3111** includes long staples **3112** and short staples **3113**. As shown in FIG. **42**, the long staples **3112** have a base length of l_1, and the short staples **3113** have a base length of l_2, which is less than l_1. In the depicted array **3111**, a first short staple **3113***a* is aligned with an axis A_a, and a first long staple **3112***a* is aligned with an axis A_b, which traverses the axis A_a. Additional short staples **3113** are oriented parallel to the axis A_a and additional long staples **3112** are parallel to the axis A_b.

In other arrangements, at least one short staple **3113** can be oriented parallel to the axis A_b and/or at least one long staple **3112** can be oriented parallel to the axis A_a. In some instances, various staples **3112**, **3113** can be arranged along axes that are non-parallel to axes A_a and A_b. For example, the staple array **3111** may include staples that are oriented parallel to the longitudinal axis of the staple cartridge and/or to the firing path of the driving wedges **3064**, which are also depicted in FIG. **42**. Additionally, in various instances, the staple array **3111** can include staples having base lengths

that are different than l_2 and l_1, and/or the staple array **3111** can include additional and/or fewer longitudinal rows of staples **3112**, **3113**.

Referring still to FIG. **42**, a short staple **3113** can be embedded in the staple array **3111** intermediate at least two laterally overlapping long staples **3112**. In such an arrangement, the nested short staple **3113** in the array **3111** can densify the staple line by filling the spaces between the adjacent long staples **3112**. Because the staple line is densified in the array **3111**, bleeding and/or fluid flow control can be improved. Densified staple lines, like the staple array **3111**, for example, could be incorporated into other embodiments disclosed herein.

In other instances, the long staples **3112** defining a space therebetween for accommodating a short staple can be non-parallel to each other. Additionally or alternatively, the long staples **3112** defining the space therebetween for accommodating a short staple **3113** may only partially overlap.

An array of staples, such as the array **3111**, for example, can be positioned in a driverless staple cartridge, such as the driverless staple cartridge **2620** (FIG. **37**), for example, and can be directly engaged and driven from the staple cartridge by a driving sled, such as the sled **2058** (FIG. **37**). In such instances, the staples **3112**, **3113** in the array **3111** can be mass balanced relative to the driving wedges **3064** of the sled that contact and drive the staples **3112**, **3113**. For example, the driving wedges **3064** can apply the firing force at the ends of the staple bases equidistant from the center of mass of the staples **3112**, **3113**.

In other instances, the firing force can be applied at various spaced locations along the base of the staples **3112**, **3113**, and the cumulative firing force can be balanced relative to the staples **3112**, **3113**. In instances where a staple **3112**, **3113** does not overlie a firing path and/or is not balanced relative to the firing path, a staple driver can be employed. For example, a multi-staple driver, as further described herein, can simultaneously lift multiple staples from a staple cartridge.

In various instances, where a sled is configured to directly drive a staple, the staple can include a sled-engagement surface and the sled can include a staple-engagement surface. The staples can be generally "V-shaped" staples having a base and non-parallelly extending legs. For example, referring again to the staple **2612** depicted in FIGS. **39**B and **40**, for example, the staple **2612** includes a base **2614**, a first leg **2616** extending from a first end of the base **2614**, and a second leg **2618** extending from a second end of the base **2614**. The staple **2612** can be formed from a wire, such as a wire having a circular cross-section, and thus, the outer perimeter of the staple **2612** can consist of rounded surfaces. As a result, the sled-engagement surface of the staple **2612** can include a rounded and/or contoured surface.

In other instances, the staple **2612** can be formed from a wire having a polygonal cross-section, and thus, the outer perimeter of the staple **2612** can include edges and flat or planar surfaces. In such an embodiment, the sled-engagement surface of the staple **2612** can include at least one flat and/or planar surfaces, for example. In still other instances, the outer perimeter of the staple **2612** can include both contoured and planar surfaces. For example, the staple **2612** can be formed from a wire having a circular cross-section, which can be flattened and/or otherwise deformed to form a flat sled-engagement surface.

In certain instances, a staple can be formed from a piece of material. For example, a staple can be stamped, cut, and/or molded from a sheet of material. Various stamped staples are described in U.S. patent application Ser. No. 14/138,481, entitled SURGICAL STAPLES AND METHODS FOR MAKING THE SAME, filed Dec. 23, 2013, now U.S. Pat. No. 9,968,354, which is hereby incorporated by reference herein in its entirety. In various instances, a staple can be stamped or otherwise formed from a single piece of material, for example, and can remain a single and/or unitary piece of material, for example. In various instances, the sled-engagement surface of a staple, such as a stamped staple, can include a flat or planar surface of the stamped or otherwise formed piece. Additionally, in certain instances, the sled-engagement surface can include a groove and/or cutout, which can be configured to receive a driving wedge of a wedge sled. When a staple is angularly-oriented relative to the firing path of the driving wedge, the groove can traverse the base of the staple at an angle.

A stamped staple **2912** is depicted in FIGS. **26-28**. The staple **2912** includes a base **2914**, a first leg **2916**, and a second leg **2918**. As shown in FIGS. **26-28**, the outer perimeter of the staple **2912** includes flat and contoured surfaces. Moreover, the staple **2912** includes a groove or track **2915** (FIGS. **27** and **28**), which has been cut into the base **2914**. The groove **2915** is configured to receive a driving wedge **2964** of a drive sled **2958**.

In various instances, the width of the groove **2915** can be slightly larger than the width of the driving wedge **2964** received therein. For example, the width of the groove **2915** can be dimensioned to receive the driving wedge **2964** and prevent lateral shifting of the staple **2915** relative to the wedge **2964**.

The staple **2912** depicted in FIGS. **26-28** is angularly-oriented relative to the firing path F (FIG. **28**) of the driving wedge **2964**. For example, the staple **2912** extends along an axis A (FIG. **27**), which traverses the firing path F. As a result, the depicted groove **2915** is angularly-oriented across the base **2914** of the staple **2912**. For example, the axis A can be oriented at an angle θ relative to the firing path F. The angle θ depicted in FIG. **28** is 45°.

The base **2914** has an extended length l. For example, the length l of the base **2914** is greater than the length of the staple legs **2916**, **2918**. Because the base **2914** is elongated, the groove **2915** includes an elongated guide surface or track for the driving wedge **2964**, which promotes stability of the staple **2912** during deployment. Staples having an elongated guide or track for receiving a driving wedge, like the staples **2912**, for example, could be incorporated into other embodiments disclosed herein.

Referring primarily to FIG. **28**, the staple **2912** has a center of mass (COM), which coincides with the firing path F. For example, the firing path F extends through the center of mass (COM) of the staple **2912**, such that the staple **2912** is balanced relative to the driving wedge **2964**. As a result, the driving force exerted on the staple **2912** can lift the staple legs **2916**, **2918** simultaneously and torqueing or rotation of the staple **2912** can be prevented, minimized, and/or controlled.

In various instances, a groove or track similar to the groove **2915** can be defined into an unstamped staple. For example, a wire staple can be cut, stamped, and/or ground to create a track for slidably receiving a driving wedge. In such instances, the staple base may have the same length as the staple legs or, in other instances, the staple base can be flattened to increase or elongate the length thereof. Additionally, in certain instances, as further described herein, multiple driving wedges can drivingly engage a staple. In such instances, the staple can include multiple grooves or tracks, which can each be configured to receive a driving

wedge. Moreover, in certain instances, a staple having a guide track, similar to the groove **2915**, for example, can be oriented parallel to the longitudinal axis of a staple cartridge. For example, a parallel staple can be longitudinally aligned with a firing path of a driving wedge. In such instances, the guide track defined into the base of the staple can extend along the base of the staple parallel thereto.

As described herein, angularly-oriented staples can provided increased flexibility and/or stretchability to stapled tissue. For example, the angled staples in an array of fired staples can pivot and/or rotate toward alignment with the cut line and/or the longitudinal axis of the staple line to facilitate lengthening and/or longitudinal deformation of the stapled tissue. Because the angled staples can pivot and/or rotate in the array of stapled tissue, tearing and/or stretching of the tissue can be reduced and/or prevented. Moreover, stresses in the tissue and/or trauma to the stapled tissue can be minimized.

In addition to the longitudinal flexibility afforded by a longitudinally stretchable array of fired staples, it can be desirable to provide lateral customizations to the tissue treated by the array of staples. For example, the compressive force exerted on the tissue can be optimized and/or tailored based on the relative lateral position of the tissue relative to the staple line. In certain instances, it can be desirable to customize the compressive force on the tissue prior to stapling and/or during stapling. In other instances, it can be desirable to customize the compressive force on the stapled tissue. Moreover, in still other instances, it can be desirable to customize the compressive force on tissue prior to staling, during stapling, and after stapling, for example.

The combination of lateral tissue compression customization and longitudinal tissue flexibility can provide synergistic tissue effects. For example, when compressive forces exerted on the tissue during and/or after stapling generate less stress in the compressed tissue and/or affect reduced tissue trauma, the compressed tissue may accommodate increased elastic deformation. In other words, as optimally compressed tissue is stretched and/or elongated, the optimally compressed tissue may better accommodate the rotating and/or pivoting of staples therein. Moreover, when stapled tissue readily accommodates staple pivoting and/or shifting, stresses in the stapled tissue may be reduced and trauma to the stapled tissue may be minimized. Accordingly, as staples pivot and/or shift to accommodate for tissue elongation or longitudinal stretch, stress and/or trauma to the optimally compressed tissue can be further minimized.

A staple cartridge **3420** is depicted in FIGS. **43-45**. The depicted staple cartridge **3420** includes a cartridge body **3424** and a deck **3422**. Multiple staple cavities **3428** are defined into the body **3424** of the depicted staple cartridge **3420**, and each staple cavity **3428** forms an opening **3430** in the deck **3422**. Additionally, the staple cavities **3428** shown in FIGS. **43-45** are angularly-oriented relative to the longitudinal axis L (FIG. **44**) of the staple cartridge **3420**. In the depicted staple cartridge **3420**, a longitudinal slot **3432** is defined partially through the cartridge body **3424**, and three rows of staple cavities **3428** are positioned on either side of the longitudinal slot **3432**. The arrangement of staple cavities **3428** shown in FIGS. **43-45** is configured to receive an array of angled staples. For example, multiple staples, such as the staples **3412** (FIG. **45**) are removably positioned in the staple cavities **3428**.

In the depicted staple cartridge **3420**, the staple cavities **3428** in an outside row on a first side of the longitudinal slot **3432** are oriented at a first angle relative to the longitudinal axis L (FIG. **44**), the staple cavities **3428** in an intermediate row on the first side of the longitudinal slot **3432** are oriented at a second angle relative to the longitudinal axis L, and the staple cavities **3428** in an inner row on the first side of the longitudinal slot **3432** are oriented at a third angle relative to the longitudinal axis L. In the depicted staple cartridge **3420**, the third angle is the same, or generally the same, as the first angle, and the second angle is 90 degrees, or approximately 90 degrees, offset from the first angle and from the third angle.

As further depicted in FIGS. **43-45**, the staple cavities **3428** in an outside row on a second side of the longitudinal slot **3432** are oriented at a fourth angle relative to the longitudinal axis L (FIG. **44**), the staple cavities **3428** in an intermediate row on the second side of the longitudinal slot **3432** are oriented at a fifth angle relative to the longitudinal axis L, and the staple cavities **3428** in an inside row on the second side of the longitudinal slot **3432** are oriented at a sixth angle relative to the longitudinal axis L. In the depicted staple cartridge **3420**, the sixth angle is the same, or generally the same, as the fourth angle, and the fifth angle is 90 degrees, or approximately 90 degrees, offset from the fourth angle and from the sixth angle. Additionally, in the arrangement depicted in FIGS. **43-45**, the second angle is the same, or generally the same, as the fourth angle and the sixth angle, and the first angle is the same, or generally the same, as the third angle and the fifth angle.

In other instances, the staple cartridge **3420** may include additional and/or fewer rows of staple cavities. Additionally or alternatively, the angular orientation of the staples **3412** in each row may be adjusted and/or modified to accommodate a different array. For example, in certain instances, at least one staple cavity can be parallel to the longitudinal axis L.

In various instances, the staple cartridge **3420** depicted in FIGS. **43-45** can be used with the end effector **2000** depicted in FIG. **7**. For example, the staple cartridge **3420** can be loaded into the elongate channel of the second jaw **2004**. Additionally, in certain instances, the staple cartridge **3420** can be fired with single-staple drivers, multi-staple drivers, and/or a combination thereof. For example, a single-staple driver **3440** (FIG. **45**) can be positioned in each staple cavity **3428**, and can drivingly engage the staple **3412** supported thereon. The drivers **3440** shown in FIG. **45** can be positioned within the cartridge body **3424** such that the cradle of each driver **3440** is aligned with one of the staples **3412** positioned in one of the staple cavities **3428**.

In certain instances, the staple cartridge **3420** can include multi-staple drivers. For example, a multi-staple driver can be configured to fire the staples **3412** (FIG. **45**) from a first group of staple cavities **3428**, and another multi-staple driver can be configured to fire staples **3412** from a second group of staple cavities **3428**. In other instances, the staple cartridge **3420** may not include drivers. For example, a firing member and/or sled, such as the firing member **2660** and the sled **2658** (FIG. **37**), for example, can be configured to directly contact, engage, and/or drive the staples **3412**. In various instances, the drivers **3440** and/or the staples **3412** can be mass balanced relative to the firing path(s) of a sled, such as the sled **2058** (FIG. **7**) and/or sled **2658** (FIG. **37**), for example, during deployment.

The deck **3422** depicted in FIGS. **43-45** includes multiple longitudinally extending portions. For example, the deck **3422** includes a first longitudinal portion **3422***a*, a second longitudinal portion **3422***b*, and a third longitudinal portion **3422***c* on one side of the longitudinal slot **3432**, and a fourth longitudinal portion **3422***d*, a fifth longitudinal portion **3422***e*, and a sixth longitudinal portion **3422***f* on the other

side of the longitudinal slot **3432**. As shown in FIGS. **43-45**, a longitudinal row of staple cavities **3428** is aligned with each longitudinally extending portion **3422***a*, **3422***b*, **3422***c*, **3422***d*, **3422***e*, **3422***f*. For example, the outside row of staple cavities **3428** on the first side of the longitudinal slot **3432** is aligned with the first longitudinal portion **3422***a*, the intermediate row of staple cavities **3428** on the first side of the longitudinal slot **3432** is aligned with the second longitudinal portion **3422***b*, and the inside row of staple cavities **3428** on the first side of the longitudinal slot **3432** is aligned with the third longitudinal portion **3422***c*. Additionally, the outside row of staple cavities **3428** on the second side of the longitudinal slot **3432** is aligned with the fourth longitudinal portion **3422***d*, the intermediate row of staple cavities **3428** on the second side of the longitudinal slot **3432** is aligned with the fifth longitudinal portion **3422***e*, and the inside row of staple cavities **3428** on the second side of the longitudinal slot **3432** is aligned with the sixth longitudinal portion **3422***f*.

In other instances, the staple cartridge **3420** may include additional and/or fewer longitudinally extending portions. For example, the longitudinal portions can be adjusted and/or modified to correspond to a different arrangement of staple cavities and staples. In certain embodiments, more than one longitudinal row of staple cavities can coincide with at least one longitudinal portion. Additionally or alternatively, at least one longitudinal portion may not include a staple cavity and/or a row of staples, for example.

In the depicted staple cartridge **3420**, the adjacent longitudinal portions **3422***a*, **3422***b*, **3422***c*, **3422***d*, **3422***e*, and **3422***f* are vertically offset from each other by a ridge **3423**. For example, a ridge **3423** extends between the first portion **3422***a* and the second portion **3422***b*, and another ridge **3423** extends between the second portion **3422***b* and the third portion **3422***c*. Additionally, in the depicted arrangement, a ridge **3423** extends between the fourth portion **3422***d* and the fifth portion **3422***e*, and another ridge **3423** extends between the fifth portion **3422***e* and the sixth portion **3422***f*. As shown in FIGS. **43-45**, the longitudinal slot **3432** extends between the third portion **3422***c* and the fourth portion **3422***d*.

The ridges **3423** disclosed in FIGS. **43-45** define an elevation change in the deck **3422**. For example, the ridge **3423** between the first portion **3422***a* and the second portion **3422***b* defines a step upward, such that the second portion **3422***b* has a higher elevation than the first portion **3422**. In various instances, the ridges **3423** adjust the height of the deck **3422** laterally. For example, the ridges **3423** increase the height of the deck **3422** inwardly and decrease the height of the deck **3422** outwardly, such that the largest height is adjacent to the longitudinal slot **3432** and the laterally flanking portions have the shortest height.

The gap between the deck **3422** and the staple forming surface of the anvil controls the degree of tissue compression when the jaws of an end effector, such as the first jaw **2002** and the second jaw **2004** of the end effector **2000** (FIG. **7**) are clamped. Accordingly, the height of the deck **3422** can affect the degree of tissue compression between the clamped jaws. For example, in regions where the deck **3422** is taller, the adjacent tissue can be relatively more compressed between the clamped jaws, and in regions where the deck **3422** is shorter, the adjacent tissue can be relatively less compressed between the clamped jaws. Accordingly, the ridges **3423** disclosed in FIGS. **43-45** can affect a lateral variation in tissue compression. As further described herein, the degrees of tissue compression can be selected and/or optimized to reduce stress and/or trauma to the compressed tissue. Moreover, because the staple cartridge **3420** is configured to fire a longitudinally flexible array of staples **3412**, the integrity of the stapled tissue can be further preserved.

The ridges **3423** disclosed in FIGS. **43-45** affect abrupt and/or steep steps between the adjacent longitudinal portions **3422***a*, **3422***b*, **3422***c*, **3422***d*, **3422***e*, and **3422***f*. FIGS. **43-45** further disclose that the ridges **3423** curve around the staple cavities **3428** in the adjacent rows of staple cavities **3428**. For example, the ridges **3423** generally extend along a path that corresponds to and/or matches the angular orientation of the staple cavity or cavities **3428** adjacent thereto. As a result, the ridges **3423** include multiple contours and/or bends. Additionally, the ridges **3423** include multiple straight, or generally straight portions, intermediate the contours.

In other instances, a ridge **3423** may define a less steep elevation change. For example, at least one ridge **3423** and/or a portion thereof can gradually slope and/or incrementally step to a different elevation. Additionally, in certain instances, the height of a longitudinal portion **3422***a*, **3422***b*, **3422***c*, **3422***d*, **3422***e*, **3422***f* can vary. For example, the height of each longitudinal portion **3422***a*, **3422***b*, **3422***c*, **3422***d*, **3422***e*, **3422***f* can vary laterally and/or longitudinally. In such instances, the deck may define sloped and/or angled surfaces intermediate the ridges **3423**, for example.

In other staple cartridges, ridges can extend along a different path between the rows of staples and staple cavities. For example, the staple cartridge **3520**, which is shown in FIGS. **46-48**, is similar to the staple cartridge **3420** (FIGS. **43-45**) and like reference characters refer to similar elements. For example, the staple cartridge **3520** includes a cartridge body **3524** and a deck **3522**. Multiple staple cavities **3528** are defined into the body **3524** of the depicted staple cartridge **3520**, and each staple cavity **3528** forms an opening **3530** in the deck **3422**. Additionally, the staple cavities **3528** shown in FIGS. **46-48** match the array of staple cavities **3428** depicted in FIGS. **43-45**. For example, in the depicted staple cartridge **3520**, a longitudinal slot **3532** is defined partially through the cartridge body **3524**, and three rows of staple cavities **3528** are positioned on either side of the longitudinal slot **3532**. The arrangement of staple cavities **3528** shown in FIGS. **46-48** is configured to receive an array of angled staples. For example, multiple staples, such as the staples **3412** (FIG. **45**) can be removably positioned in the staple cavities **3528**.

The deck **3522** disclosed in FIGS. **46-48** includes multiple longitudinally extending portions. For example, the depicted deck **3522** includes a first longitudinal portion **3522***a*, a second longitudinal portion **3522***b*, and a third longitudinal portion **3522***c* on one side of the longitudinal slot **3532**, and a fourth longitudinal portion **3522***d*, a fifth longitudinal portion **3522***e*, and a sixth longitudinal portion **3522***f* on the other side of the longitudinal slot **3432**. As shown in FIGS. **46-48**, a longitudinal row of staple cavities **3528** is aligned with each longitudinally extending portion **3522***a*, **3522***b*, **3522***c*, **3522***d*, **3522***e*, **3522***f*. Additionally, in the depicted staple cartridge **3520**, the adjacent longitudinal portions **3522***a*, **3522***b*, **3522***c*, **3522***d*, **3522***e*, and **3522***f* are vertically offset from each other by a ridge **3523**.

The ridges **3523** disclosed in FIGS. **46-48** extend along different paths than the ridges **3423** of the deck **3422** (FIGS. **43-45**). For example, the ridges **3423** include multiple cut-ins, such as cut-ins **3523***a*, **3523***b*, **3523***c*, and **3523***d* (FIG. **47**), for example, where the ridges **3523** do not extend along and/or adjacent to a staple cavity **3528**. The geometry of the cut-ins **3523***a*, **3523***b*, **3523***c*, and **3523***d* can be selected to adjust the tissue compression. For example, a cut-in can enlarge a region of reduced pressure and reduce

an adjacent region of increased pressure. In various instances, it may be desirable to provide the cut-ins **3523***a*, **3523***b*, **3523***c*, and **3523***d* towards the knife slot **3532** to provide regions of reduced tissue compression, for example.

As further described herein, the ridges **3523** disclosed in FIGS. **46-48** can affect a lateral variation in tissue compression. For example, the degrees of tissue compression can be selected and/or optimized to reduce stress and/or trauma to the compressed tissue. Moreover, because the staple cartridge **3520** is configured to fire a longitudinally flexible array of staples **3512**, the integrity of the stapled tissue can be further preserved.

In other instances, the ridges on a cartridge deck can be straight or generally straight. For example, the staple cartridge **3620**, which is shown in FIGS. **49-51**, is similar to the staple cartridge **3420** (FIGS. **43-45**) and like reference characters refer to similar elements. For example, the staple cartridge **3620** includes a cartridge body **3624** and a deck **3622**. Multiple staple cavities **3628** are defined into the body **3624** of the depicted staple cartridge **3620**, and each staple cavity **3628** forms an opening **3630** in the deck **3622**. Additionally, the staple cavities **3628** shown in FIGS. **49-51** match the arrangement of staple cavities **3528** depicted in FIGS. **46-48**. For example, in the depicted staple cartridge **3620**, a longitudinal slot **3632** is defined partially through the cartridge body **3624**, and three rows of staple cavities **3628** are positioned on either side of the longitudinal slot **3632**. The arrangement of staple cavities **3628** shown in FIGS. **46-48** is configured to receive an array of angled staples. For example, multiple staples, such as staples **3612** (FIG. **51**) are removably positioned in the staple cavities **3628**.

The deck **3622** disclosed in FIGS. **49-51** includes multiple longitudinally extending portions. For example, the depicted deck **3622** includes a first longitudinal portion **3622***a*, a second longitudinal portion **3622***b*, and a third longitudinal portion **3622***c* on one side of the longitudinal slot **3632**, and a fourth longitudinal portion **3622***d*, a fifth longitudinal portion **3622***e*, and a sixth longitudinal portion **3622***f* on the other side of the longitudinal slot **3632**. As shown in FIGS. **49-51**, a longitudinal row of staple cavities **3628** is aligned with each longitudinally extending portion **3622***a*, **3622***b*, **3622***c*, **3622***d*, **3622***e*, **3622***f*. Additionally, in the depicted staple cartridge **3620**, the adjacent longitudinal portions **3622***a*, **3622***b*, **3622***c*, **3622***d*, **3622***e*, and **3622***f* are vertically offset from each other by a ridge **3623**.

The ridges **3623** disclosed in FIGS. **49-51** extend along different paths than the ridges **3423** of the deck **3422** (FIGS. **43-45**) and the ridges **3523** of the deck **3522** (FIGS. **46-48**). For example, the ridges **3623** extend along straight paths, which extend parallel to the longitudinal slot **3632**. Moreover, a portion of the longitudinal ridges **3523** extend through staple cavities **3628** in the staple cartridge **3620**. As a result, one end or side of a staple cavity **3628** is positioned in one of the longitudinal deck portions **3622***a*, **3622***b*, **3622***c*, **3622***d*, **3622***e*, or **3622***f*, and the other end or side of the same staple cavity **3628** is positioned in another of the longitudinal deck portions **3622***a*, **3622***b*, **3622***c*, **3622***d*, **3622***e*, or **3622***f*.

As further described herein, the ridges **3623** disclosed in FIGS. **49-51** can affect a lateral variation in tissue compression. For example, the degrees of tissue compression can be selected and/or optimized to reduce stress and/or trauma to the compressed tissue. Moreover, because the staple cartridge **3620** is configured to fire a longitudinally flexible array of staples **3612**, the integrity of the stapled tissue can be further preserved.

In certain instances, the staple cartridge **3620** includes multi-staple drivers, such as the multi-staple drivers **3640** disclosed in FIG. **51**. Each multi-staple driver **3640** is configured to fire the staples **3612** from a group of staple cavities **3628**. For example, similar to the multi-staple drivers **2040***a*, **2040***b* (FIGS. **7-9**), the multi-staple drivers **3640** include three steps **3645**, and a trough or cradle **3642** is defined into each step **3645**. Additionally, the steps **3645** of the multi-staple drivers **3640** are connected by a connecting flange **3648**. Each multi-staple driver **3640** shown in FIG. **51** supports staples **3612** across multiple rows of staple cavities **3628**, and is configured to fire staples **3612** from staples cavities **3628** in multiple rows. In FIG. **51**, the height of each step **3645** and the depth of each cradle **3642** defined therein is the same, such that the staples **3612** formed between the steps **3645** and a staple forming surface on the anvil have the same formed height.

As further described herein, it may be desirable to customize and/or optimize the formed staple height to affect varied tissue compression within formed staples. Accordingly, at least one of the multi-staple drivers **3640** can be modified to form staples **3612** of different formed heights. For example, the steps **3645** and/or the cradles **3642** of a staple multi-staple driver **3640** can be modified to have different dimensions, such that at least two of the staples **3612** formed by the modified multi-staple driver **3640** have different formed heights. In other instances, the steps **3645** and/or the cradles **3642** of different staple drivers **3640** can be modified, such that a first driver **3640** is configured to form staples **3612** having a first formed height and a second driver **3640** is configured to form staples having a second, different formed height **3612**.

In still other instances, the staple cartridge **3620** may include single-staple drivers. Alternatively, the staple cartridge **3620** may not include drivers. For example, a firing member and/or sled, such as the firing member **2660** and/or the sled **2658** (FIG. **37**), for example, can be configured to directly contact, engage, and/or drive the staples **3612**. In various instances, the drivers **3640** and/or the staples **3612** can be mass balanced relative to the firing path(s) of a sled, such as sled **2058** (FIG. **7**) and/or sled **2658** (FIG. **37**), for example.

As described herein, to customize and/or optimize the tissue compression within a formed staple, staples in a staple array can be formed to different formed heights. For example, in various instances, it is desirable to vary tissue compression, and thus the formed staple dimensions, laterally. In such circumstances, tissue closer to the cut line can be compressed more than tissue farther from the cut line, for example. Various staple arrays having different unformed heights and/or different formed heights are described in U.S. Pat. No. 7,866,528, entitled STAPLE DRIVE ASSEMBLY, which issued on Jan. 1, 2011; U.S. Pat. No. 7,726,537, entitled SURGICAL STAPLER WITH UNIVERSAL ARTICULATION AND TISSUE PRE-CLAMP, which issued on Jun. 1, 2010; U.S. Pat. No. 7,641,091, entitled STAPLE DRIVE ASSEMBLY, which issued on Jan. 5, 2010; U.S. Pat. No. 7,635,074, entitled STAPLE DRIVE ASSEMBLY, which issued on Dec. 22, 2009; and U.S. Pat. No. 7,997,469, entitled STAPLE DRIVE ASSEMBLY, which issued on Aug. 16, 2011, which are hereby incorporated by reference herein in their respective entireties.

Referring again to FIGS. **49-51**, in various instances, the staple cartridge **3620** can be employed with an end effector that is configured to deform the staples **3612** to different formed heights. The angled staple cavities **3628** in the staple cartridge **3620** are arranged in a plurality of rows. For

example, angled the staple cavities **3628** are arranged in a first outer row, a first intermediate row, and a first inner row on a first side of the staple cartridge **3620**, and the angled staple cavities **3628** are arranged in a second outer row, a second intermediate row, and a second inner row on a second side of the staple cartridge **3620**. In various instances, the staples **3612** fired from the staple cavities **3628** in the first outer row can assume a taller formed height than the staples **2612** fired from the staple cavities **3628** in the first intermediate row, and/or the staples **3612** fired from the staple cavities **3628** in the first intermediate row can assume a taller formed height than the staples **2612** fired from the staple cavities **3628** in the first inner row. Additionally or alternatively, the staples **3612** fired from the staple cavities **3628** in the second outer row can assume a taller formed height than the staples **2612** fired from the staple cavities **3628** in the second intermediate row, and/or the staples **3612** fired from the staple cavities **3628** in the second intermediate row can assume a taller formed height than the staples **2612** fired from the staple cavities **3628** in the second inner row.

In certain instances, the staples **3612** fired from the staple cartridge **3620** can have different unformed heights. For example, the staples **3612** fired from the staple cavities **3628** in the first outer row can have a greater unformed height than the staples **2612** fired from the staple cavities **3628** in the first intermediate row, and/or the staples **3612** fired from the staple cavities **3628** in the first intermediate row can have a greater unformed height than the staples **2612** fired from the staple cavities **3628** in the first inner row. Additionally or alternatively, the staples **3612** fired from the staple cavities **3628** in the second outer row can have a greater unformed height than the staples **2612** fired from the staple cavities **3628** in the second intermediate row, and/or the staples **3612** fired from the staple cavities **3628** in the second intermediate row can have a greater unformed height than the staples **2612** fired from the staple cavities **3628** in the second inner row.

In various instances, staple arrays having different unformed heights and/or different formed heights can be incorporated into various staple cartridges described herein. For example, the staple cartridge **3420** (FIGS. **43-45**) and/or the staple cartridge **3520** (**46-48**) can include staples having different unformed heights and/or can be configured to fire staples to different formed heights. In such instances, the stepped cartridge decks **3422** (FIGS. **43-45**), **3522** (FIGS. **46-48**), and **3622** (FIGS. **49-51**) can affect variable pre-firing tissue compression, for example, and the different formed staple heights can affect variable post-firing tissue compression, for example.

As described herein, angled staple arrays provide improved flexibility to the stapled tissue. A staple that is angled relative to the cut line and/or the longitudinal axis of staple cartridge can have one staple leg closer to the cut line than another staple leg. In such an arrangement, to customize and/or optimize the tissue compression laterally, the staple can be formed to different formed heights. For example, one end of a staple can be formed to a first height, and the other end of the staple can be formed to a second, different height. In such instances, tissue treated by the same row of staples could be subjected to different compressive forces.

A staple cartridge **3720** and an anvil **3703** are depicted in FIG. **79**. The staple cartridge **3720** is similar to the staple cartridge **3620** (FIGS. **49-51**) and like reference characters refer to similar elements. For example, the staple cartridge **3720** includes a cartridge body **3724** and a deck **3722**. The deck **3722** includes multiple longitudinally extending portions **3722***a*, **3722***b*, **3722***c*, and adjacent longitudinal portions **3722***a*, **3722***b*, **3722***c* are separated by a ridge **3723**. The ridges **3723** extend longitudinally along at least a portion of the length of the cartridge body **3722**. An angled staple cavity **3728** is defined into the cartridge body **3724**, and a ridge **3723** extends through the staple cavity **3728**. As a result, the first end of the depicted staple cavity **3728** is positioned in the first longitudinal portion **3722***a* and the second end of the depicted staple cartridge **3728** is positioned in the second longitudinal portion **3722***b*. Additionally, a longitudinal slot **3732** is defined partially through the depicted cartridge body **3724**.

In various instances, the staple cartridge **3720** can include multiple staple cavities **3728**, which are configured to receive an array of angled staples **3712**. For example, the staple cartridge **3720** can include an arrangement of staple cavities **3728** that corresponds to the arrangement of staple cavities **3628** depicted in FIGS. **49-51**. In certain instances, three rows of staple cavities **3728** can be positioned on both sides of the longitudinal slot **3732**, for example.

An unformed staple **3712** and a deformed staple **3712'** are depicted in FIG. **79**. The staple **3712** includes a base **3714**, a first leg **3716** extending from the base **3714**, and a second leg **3718** extending from the base **3714**. A driver **3740** is also depicted in FIG. **79**. The driver **3740** includes a trough or cradle **3742**, which is configured to support the base **3714** of the staple **3712**. The driver **3740** and the cradle **3742** defined therein have a variable height between a first end **3741** and a second end **3743** of the driver **3740**. For example, the first end **3741** of the driver **3740** defines a first height and the second end **3743** of the driver **3740** defines a second height, which is less than the first height.

As the driver **3740** is fired and lifted within the staple cavity **3728**, the staple **3712** rides upward on the lifting driver **3740** and is deformed by the staple forming pockets **3705** of the anvil **3703**. The formed staple **3712'** is also depicted in FIG. **79**. The formed height of the staple **3712'** is a function of the distance or gap between the lifted driver **3740** and the staple forming pockets **3705** of the anvil **3703**. Because the distance between the staple-supporting surface **3742** of the lifted driver **3740** and the staple forming pockets **3705** varies in the staple cartridge **3720** disclosed in FIG. **79**, the formed staple **3712'** has a variable height. For example, the height of formed staple **3712'** is greater between the first leg **3716'** and the base **3714'** than between the second leg **3718'** and the base **3714'**. In various instances, the angular orientation of the staple **3712'** can place the first leg **3716'** farther from the longitudinal slot **3732** than the second leg **3718'**. In such instances, the first leg **3716'** can be an outer leg of the staple **3712'** and the second leg **3718'** can be an inner leg of the staple **3712'**. In such an arrangement, the tissue compression can be greater between the inner leg **3718'** and the base **3714'** than between the outer leg **3716'** and the base **3714'**.

Staple cartridge and anvil arrangements that are configured to deform angled staples to different formed heights, like the staple cartridge **3720** and the anvil **3705**, for example, could be incorporated into other embodiments disclosed herein. For example, drivers having a variable height staple-supporting cradle, like the drivers **2740**, for example, could be incorporated into other staple cartridge and/or end effector assemblies disclosed herein.

The unformed staple **3712** depicted in FIG. **79** also has a variable height. For example, the staple **3712** defines a first height at the first leg **3716** and a second height at the second leg **3718**, which is less than the first height. Additionally, the

base **3714** of the staple **3712** defines a bend or step **3715**, which lifts the second leg **3718** relative to the first leg **3716**.

In other instances, the unformed staple **3712** may have a uniform height. Additionally or alternatively, the base **3714** of the unformed staple **3712** may be straight, or generally straight, between the first leg **3716** and the second leg **3718**. In such instances, the staple **3712** may still assume a variable formed height when the distance between the staple-supporting surface **3742** of the lifted driver **3740** and the staple forming pockets **3705** is variable. For example, one of the staple legs **3716**, **3718** can be more deformed and/or compacted than the other staple leg **3716**, **3718** to accommodate for the additional leg length. Additionally, because the distance between the staple-supporting surface **3742** and the staple forming pockets **3705** varies, the base **3714** can be bent and/or otherwise deformed during firing to accommodate for the height difference.

A staple cartridge **3820** and an anvil **3803** are depicted in FIG. **80**. The staple cartridge **3820** is similar to the staple cartridge **3620** (FIGS. **49-51**) and like reference characters refer to similar elements. For example, the staple cartridge **3820** includes a cartridge body **3824** and a deck **3822**. Unlike the deck **3622** (FIGS. **49-51**), the deck **3822** has a flat, or generally flat, unstepped surface. An angled staple cavity **3828** is defined into the cartridge body **3824**. Additionally, a longitudinal slot **3832** is defined partially through the depicted cartridge body **3824**.

In various instances, the staple cartridge **3820** can include multiple staple cavities **3828**, which are configured to receive an array of angled staples. For example, the staple cartridge **3820** can include an arrangement of staple cavities that corresponds to the arrangement of staple cavities **3628** depicted in FIGS. **49-51**. In certain instances, three rows of staple cavities **3828** can be positioned on either side of the longitudinal slot **3832**, for example.

An unformed staple **3812** is depicted in FIG. **80**. The staple **3812** includes a base **3814**, a first leg **3816** extending from the base **3814**, and a second leg **3818** extending from the base **3814**. A driver **3840** is also depicted in FIG. **80**. The driver **3840** includes a trough or cradle **3842**, which is configured to support the base **3814** of the staple **3812**.

The anvil **3803** includes a laterally stepped, cartridge-facing surface **3801**. A first staple forming pocket **3805***a* and a second staple forming pocket **3805***b* are defined into the stepped surface **3801**. As depicted in FIG. **80**, the first staple forming pocket **3805***a* is in a first step **3801***a* of the stepped surface **3801** and the second staple forming pocket **3805***b* is in a second step **3801***b* of the stepped surface **3801**.

As the driver **3840** is fired and lifted within the staple cavity **3828**, the staple **3812** rides upward on the lifting driver **3840** and is deformed by the staple forming pockets **3805***a*, **3805***b* of the anvil **3803**. The formed staple **3812'** is also depicted in FIG. **80**. The formed height of the staple **3812'** is a function of the distance or gap between the lifted driver **3840** and the staple forming pockets **3805***a*, **3805***b* of the anvil **3803**. Because the distance between the staple-supporting surface **3842** of the lifted driver **3840** and each staple forming pockets **3805***a*, **3805***b* is different in the staple cartridge **3720** depicted in FIG. **79**, the formed staple **3812'** assumes a variable height. For example, the height of formed staple **3812'** is greater between the first leg **3816'** and the base **3814'** than between the second leg **3818'** and the base **3814'**. In various instances, the angular orientation of the staple **3812'** can place the first leg **3816'** farther from the longitudinal slot **3832** than the second leg **3818'**. In such instances, the first leg **3816'** can be an outer leg of the staple **3812'** and the second leg **3818'** can be an inner leg of the staple **3812'**. In such an arrangement, the tissue compression can be greater between the inner leg **3818'** and the base **3814'** than between the outer leg **3816'** and the base **3814'**.

In other instances, the staple **3812'** can be deformed to a smaller height at the outer leg **3816'**. As a result, the tissue compression could be greater between the outer leg **3816'** and the base **3814'** than between the inner leg **3818'** and the base **3814'**.

Staple cartridge and anvil arrangements that are configured to deform angled staples to different formed heights, like the staple cartridge **3820** and the anvil **3805***a*, **3805***b*, for example, could be incorporated into other embodiments disclosed herein. For example, variable depth pockets, like pockets **3805***a*, **3805***b*, for example, could be incorporated into other embodiments disclosed herein.

The unformed staple **3812** depicted in FIG. **80** has a variable height. For example, the staple **3812** defines a first height at the first leg **3816** and a second height at the second leg **3818**, which is less than the first height.

In other instances, the unformed staple **3812** may have a uniform height. In such instances, the staple **3812** may still assume a variable formed height when the distance between the staple-supporting surface **3842** of the lifted driver **3840** and the staple forming pockets **3805** is variable. For example, one of the staple legs **3816**, **3818** can be more deformed and/or compacted than the other staple leg **3816**, **3818** to accommodate for the additional length.

In certain types of surgical procedures, the use of surgical staples or surgical fasteners has become the preferred method of joining tissue, and, specially configured surgical staplers or circular surgical fastening devices have been developed for these applications. For example, intra-luminal or circular staplers have been developed for use in surgical procedures used to form an "anastomosis". Circular staplers useful to perform an anastomosis are disclosed, for example, in U.S. Pat. No. 5,104,025, entitled INTRALUMINAL ANASTOMOTIC SURGICAL STAPLER WITH DETACHED ANVIL, U.S. Pat. No. 5,309,927, entitled CIRCULAR STAPLER TISSUE RETENTION SPRING METHOD, U.S. Pat. No. 7,665,647, entitled SURGICAL CUTTING AND STAPLING DEVICE WITH CLOSURE APPARATUS FOR LIMITING MAXIMUM TISSUE COMPRESSION FORCE, U.S. Pat. No. 8,668,130, entitled SURGICAL STAPLING SYSTEMS AND STAPLE CARTRIDGES FOR DEPLOYING SURGICAL STAPLES WITH TISSUE COMPRESSION FEATURES, the entire disclosures of each being hereby incorporated by reference herein.

One form of an "anastomosis" comprises a surgical procedure wherein sections of intestine are joined together after a connecting section (usually a diseased section) has been excised. The procedure requires joining the ends of two tubular sections together to form a continuous tubular pathway. Previously, this surgical procedure was a laborious and time consuming operation. The surgeon had to precisely cut and align the ends of the intestine and maintain the alignment while joining the ends with numerous suture stitches. The development of circular fastening devices has greatly simplified the anastomosis procedure and has also decreased the time required to perform an anastomosis.

In general, a conventional circular stapler or fastening device consists of an elongated shaft that includes a proximal actuating mechanism and a distal stapling mechanism that is mounted to the shaft. The distal stapling mechanism typically consists of a fixed stapling cartridge that contains a plurality of staples that are arranged in a concentric circular array. A round cutting knife is also concentrically

mounted in the cartridge such that it is interior to the staples. The knife is axially moveable in a distal direction. Extending axially from the center of the cartridge is a trocar shaft. The trocar shaft is also axially moveable within the elongated shaft. The trocar shaft is configured to be removably attached to an anvil member. The anvil member includes a staple-forming undersurface that is arranged to confront the staple cartridge for forming the ends of the staples as they are advanced into contact with it. The distance between the distal face of the staple cartridge and the staple forming undersurface of the anvil is controlled by an adjustment mechanism that is mounted to the proximal end of the stapler shaft. Tissue that is contained between the staple cartridge and the staple anvil is simultaneously stapled and cut when the actuating mechanism is actuated by the surgeon.

When performing an anastomosis using a circular stapler, the intestine is typically initially stapled using a conventional surgical stapler with double rows of staples being emplaced on either side of a target section (i.e., the diseased section or specimen) of intestine. The target section is typically simultaneously cut as the section is stapled. Next, after removing the specimen, the surgeon typically inserts the anvil into the proximal end of the lumen (i.e., intestine), proximal of the staple line. This is done by inserting the anvil head into an entry port cut into the proximal lumen (intestine) by the surgeon. On occasion, the anvil can be placed transanally, by placing the anvil head on the distal end of the stapler and inserting the instrument through the rectum. The proximal end of the intestine is then sutured to the anvil shaft using a suture or other conventional tying device. Next, the surgeon cuts excess tissue adjacent to the tie and the surgeon attaches the anvil to the trocar shaft of the stapler. The surgeon then closes the gap between the anvil and cartridge by drawing the anvil towards the staple cartridge. As the anvil moves toward the cartridge, the proximal and distal ends of the intestine are clamped therebetween. The stapler is then actuated causing the rows of staples to be driven through both ends of the intestine into forming contact with the anvil. Simultaneously, as the staples are driven and formed, the circular blade is driven through the intestinal tissue ends, cutting the ends adjacent to the inner row of staples. The surgeon then withdraws the stapler from the intestine and the anastomosis is complete.

The effective healing of a colorectal anastomosis can be challenged by several factors and conditions. For example, healing can be effected by the presence of bacterial contaminates in the area of the anastomosis. In general practice, the success rate of the anastomosis tends to improve with the patient's return to mobility. It is desirable for the patient to return to contents passing as soon as possible. One inhibitor to contents passing is the risk of "stricture". If the colon contents are unable to pass the staple line or if they dramatically stress the staple line, a tear, rupture or leak can occur. A linear expandable line of staples was developed for highly expanding organs like the lungs. However, such staple configurations do not lend themselves to use in connection with a circular stapler.

FIG. **29** illustrates one form of circular stapler or stapling device generally designated as **5000**. A variety of circular stapling devices are well known and employed for installing surgical staples or fasteners. Thus, various details concerning the construction and operation of circular stapling devices will not be discussed in detail herein beyond what may be necessary to understand the innovations and arrangements disclosed herein and depicted in the appended Figures. More details regarding circular fastener and stapling devices may be found in U.S. Pat. No. 7,665,647, entitled SURGICAL CUTTING AND STAPLING DEVICE WITH CLOSURE APPARATUS FOR LIMITING MAXIMUM TISSUE COMPRESSION FORCE, which has been incorporated herein in its entirety as well as other U.S. Patents incorporated by reference herein. In general, the circular stapling device **5000** shown in FIG. **29** includes a head **5002**, an anvil **5004**, an adjustment knob assembly **5006** and a handle **5010** that supports a trigger **5008** thereon. The handle assembly **5010** is coupled to the head **5002** by an arcuate shaft assembly **5012**. In the illustrated arrangement, the trigger **5008** is pivotally supported by handle assembly **5010** and is used to operate the stapler **5000** when a safety mechanism (not illustrated) is released. When trigger **5008** is activated, a firing mechanism is movably advanced within the shaft assembly **5012** so that staples or fasteners are expelled, or deployed, from the head **5002** into forming contact with an anvil forming undersurface **5005** of the anvil **5004**.

Simultaneously, a circular knife (not viewable in FIG. **29**) that is operably supported within head **5002** is advanced distally toward the anvil **5004** and serves to cut the tissue that has been clamped between the head **5002** and anvil **5004** in a known manner. Stapling device **5000** is then removed from the surgical site leaving the stapled tissue in place.

As can also be seen in FIG. **29**, the anvil **5004** includes circular body portion **5014** that has an anvil shaft **5016** protruding therefrom. The anvil shaft **5016** is configured to be removably attached to a trocar shaft **5050** operably supported within the shaft assembly **5012**. See FIG. **29**A. As is known, the trocar shaft **5050** is movably supported with the shaft assembly **5012** and operably interfaces with the adjustment knob assembly **5006** that is rotatably supported on the handle assembly **5010**. The anvil shaft **5016** may be removably attached to the trocar shaft **5050** by retention clips **5052** or other releasable fastening arrangements may also be employed to removably affix the anvil shaft **5016** to the trocar shaft **5050**. Once the anvil shaft **5016** has been attached to the trocar shaft **5050**, the clinician can move the anvil **5004** toward and away form the head **5002** by rotating the adjustment knob **5006** in the appropriate rotary direction.

FIG. **29**A illustrates a head **5002** that has a unique and novel fastener cartridge assembly **5020** operably mounted therein. As can be seen in that Figure, the fastener cartridge assembly **5020** includes a cartridge body **5022** that includes a circular deck **5030**. The circular deck **5030** may form a planar surface **5032** that is arranged to confront the staple forming undersurface **5005** of the anvil **5004** when the anvil shaft **5016** is attached to the trocar shaft **5050**. A plurality of fastener cavities **5040** are provided in the circular deck **5030** and are configured to receive at least one surgical staple or surgical fastener therein (not shown) that is operably supported on a driver assembly **5060** movably supported in the body **5022** of the fastener cartridge assembly **5020**. The driver assembly **5060** is operably coupled to a corresponding movable portion of the shaft assembly **5012** that operably interfaces with the trigger **5008**. Activation of the trigger **5008**, for example, will result in the axial movement of the driver assembly **5060** in the distal direction "DD". Movement of the driver assembly **5060** in the distal direction "DD" will result in the movement or expulsion of the surgical staple(s) or fastener(s) supported in each fastener cavity **5040** into forming contact with the staple forming undersurface **5005** on the anvil **5004**.

Still referring to FIG. **29**A, for example, each fastener cavity **5040** includes two cavity ends **5042**, **5044**. In the illustrated arrangement, each cavity end **5042**, which may also be referred to herein as a "first cavity end" is positioned

on a first circular axis "FCA" that has a first radius "FR". The first radius "FR" may be measured from the instrument shaft axis "SA". Also in the illustrated arrangement, each cavity end **5044**, which may also be referred to herein as a "second cavity end" is positioned on a second circular axis "SCA" that has a second radius "SR" that is different from the first radius "FR". In the illustrated example, the second radius "SR", which is also measured from the shaft axis "SA", is greater than the first radius "FR". Also in the illustrated embodiment, each fastener cavity **5040** includes a cavity axis "CA". In the illustrated embodiment, each fastener cavity **5040** is arranged in the circular deck **5030** relative to the first circular axis "FCA" and the second circular axis "SCA" such that each the cavity axis "CA" forms an acute angle with the first circular axis "FCA" and the second circular axis "SCA". Stated another way, the cavity ends **5042** of adjacent fastener cavities **5040** are adjacent to each other and the ends **5044** of the same fastener cavities **5040** are spaced form each other. Such arrangement may be referred to herein as a "zigzag" orientation. In other arrangements, however, the cavity axis "CA" may be perpendicular to the first and second circular axes "FCA" and "SCA".

In the arrangement illustrated in FIG. **29**A, each cavity end **5042**, **5044** may be V-shaped such that they generally terminate in a point. For example, each cavity end **5042** may generally terminate in a point **5043** and each end **5044** may terminate in a point **5045**. Points **5043** may be positioned on or intersect with the first circular axis "FCA" and points **5045** may be positioned on or intersect with the second circular axis "SCA". Such cavity arrangements result in the application of the surgical staples or fasteners in a similar pattern with the tissue. In the illustrated arrangement, the fastener cavities **5040** each support one surgical staple or surgical fastener therein. In other arrangements, however, more than one staple or fastener may be supported in each cavity. The fastener cartridge assembly **5020** employs like-sized staples in each fastener cavity **5040**. In other arrangements, different sizes of surgical staples or fasteners may be employed in the fastener cartridge assembly. The surgical staples that may be employed, for example, include two staple legs that extend from a central body portion or crown. The legs maybe received in the V-shaped ends **5042**, **5044** of the fastener cavity **5040** such that when they are ejected out of the cavity **5040**, the legs extend through the first or second circular axes, which ever the case may be. These staple orientations may address some of the concerns associated with staple stricture discussed above. In particular, the staple configuration formed when employing the fastener cartridge assembly **5020** may allow the staple line to expand and flex more like the original colon than a common staple line. For example, the staples or fasteners may twist as they are pulled radially allowing them to minimize the stress on the healing zones and maximize the flexibility and strength.

Another area of concern associated with colorectal anastomosis procedures relates to radial leakage through the attachment areas. The above-described fastener cartridge assembly **5020** may also address this area of concern. Another fastener cartridge assembly **5120** is shown in FIG. **30** and may also address the various problems and concerns described above. As can be seen in that Figure, the fastener cavities are arrangement in an "asymmetric pattern" wherein the staples applied through the inner ring or inner circular array of cavities function differently from those staples or fasteners applied through the outer ring or outer circular array of cavities.

More specifically and with reference to FIG. **30**, the fastener cartridge assembly **5120** includes a cartridge body **5122** that includes a circular deck **5130**. The circular deck **5130** may form a planar surface **5132** that is arranged to confront the staple forming undersurface **5005** of the anvil **5004** when the anvil shaft **5016** is attached to the trocar shaft **5050**. A first ring **5036** of first cavities **5040** are provided in the circular deck **5130** and a second ring **5160** of second cavities **5170** are provided through the cartridge deck **5130** as shown. Each of the first and second cavities **5040**, **5170** are configured to receive at least one surgical staple or surgical fastener therein (not shown) that is operably supported on a driver assembly **5060** movably supported in the body **5122** of the fastener cartridge assembly **5120**.

Each fastener cavity **5040** includes two cavity ends **5042**, **5044**. Each cavity end **5042** is positioned on a first circular axis "FCA" that has a first radius "FR". The first radius "FR" may be measured from the instrument shaft axis "SA". Each cavity end **5044** is positioned on a second circular axis "SCA" that has a second radius "SR" that is different from the first radius "FR". In the illustrated example, the second radius "SR", which is also measured from the shaft axis "SA", is greater than the first radius "FR". Each fastener cavity **5040** includes a cavity axis "CA". In the illustrated embodiment, each fastener cavity **5040** is arranged in the circular deck **5130** relative to the first circular axis "FCA" and the second circular axis "SCA" such that each the cavity axis "CA" forms an acute angle with the first circular axis "FCA" and the second circular axis "SCA". Stated another way, the cavity ends **5042** of adjacent fastener cavities **5040** are adjacent to each other and the ends **5044** of the same fastener cavities **5040** are spaced form each other. Such arrangement may be referred to herein as a "zigzag" orientation. In other arrangements, however, the cavity axis "CA" may be perpendicular to the first and second circular axes "FCA", "SCA".

Also in the arrangement illustrated in FIG. **30**, each cavity end **5042**, **5044** may be V-shaped such that they generally terminate in a point. For example, each cavity end **5042** may generally terminate in a point **5043** and each end **5044** may generally terminate in a point **5045**. Points **5043** may be positioned on or intersect with the first circular axis "FCA" and points **5045** may be positioned on or intersect with the second circular axis "SCA". Such cavity arrangements result in the application of the surgical staples or fasteners in a similar pattern with the tissue. Also in the illustrated arrangement, the second ring **5160** includes a plurality of second fastener cavities **5170** that are aligned on a third circular axis "TCA" that is arranged at a third radius "TR" from the shaft axis "SA". In the illustrated arrangement, the third radius "TR" is less that the first and second radiuses. In other arrangements, however, the third radius "TR" is greater than the first radius. In further arrangements, however, the third radius "TR" is greater than the first and second radiuses.

The unique and novel fastener cartridge assembly **5120** serves to orient the staples or fasteners in the tissue such that they would be "tunable" relative to the amount of expansion applied to the staple line. The surgical staples that may be employed, for example, include two staple legs that extend from a central body portion or crown. The legs maybe received in the V-shaped ends of the fastener cavity such that when they are ejected out of the cavity, the legs extend through the first circular axis "FCA", the second circular axis "SCA" or the third circular axis "TCA", whichever the case may be. These staple orientations may result in an improvement to the issues associated with staple stricture

discussed above. For example, one ring of staples or fasteners (e.g., the second ring **5160**) provides the standard sealing features and the first ring **5036** may be more aligned to the radial and flexibility aspects of the staple line. Such arrangement therefore, may also provide the same or similar advantages discussed above with respect to fastener cartridge assembly **5020**.

FIG. **31** depicts another unique and novel fastener cartridge assembly **5220** that may also address the various problems and concerns described above. As can be seen in that Figure, the fastener cavities are arrangement in an "asymmetric pattern" wherein the staples applied through the inner ring of cavities function differently from those staples or fasteners applied through the outer ring of cavities.

More specifically and with reference to FIG. **31**, the fastener cartridge assembly **5220** includes a cartridge body **5222** that includes a circular deck **5230**. The circular deck **5230** may form a planar surface **5232** that is arranged to confront the staple forming undersurface **5005** of the anvil **5004** when the anvil shaft **5016** is attached to the trocar shaft **5050**. A first ring **5236** of first cavities **5240** are provided in the circular deck **5230** and a second ring **5260** of second cavities **5270** are provided through the cartridge deck **5230** as shown. Each of the first and second cavities **5240**, **5270** are configured to receive at least one surgical staple or surgical fastener therein (not shown) that is operably supported on a driver assembly **5060** that is movably supported in the body **5222** of the fastener cartridge assembly **5220**.

Each fastener cavity **5240** includes two cavity ends **5242**, **5244**. Each cavity end **5242** is positioned on a first circular axis "FCA" that has a first radius "FR". The first radius "FR" may be measured from the instrument shaft axis "SA". Each cavity end **5244** is positioned on a second circular axis "SCA" that has a second radius "SR" that is different from the first radius "FR". In the illustrated example, the second radius "SR", which is also measured from the shaft axis "SA", is greater than the first radius "FR". Each fastener cavity **5240** includes a cavity axis "CA". In the illustrated embodiment, each fastener cavity **5240** is arranged in the circular deck **5230** relative to the first circular axis "FCA" and the second circular axis "SCA" such that each the cavity axis "CA" forms an acute angle with the first circular axis "FCA" and the second circular axis "SCA".

Also in the arrangement illustrated in FIG. **31**, each cavity end **5242**, **5244** may be V-shaped such that they generally terminate in a point. For example, each cavity end **5242** may generally terminate in a point **5243** and each end **5244** may generally terminate in a point **5245**. Points **5243** may be positioned on or intersect with the first circular axis "FCA" and points **5245** may be positioned on or intersect with the second circular axis "SCA". Such cavity arrangements result in the application of the surgical staples or fasteners in a similar pattern with the tissue. Also in the illustrated arrangement, the second ring **5260** includes a plurality of second fastener cavities **5270** that are aligned on a third circular axis "TCA" that is arranged at a third radius "TR" from the shaft axis "SA". In the illustrated arrangement, the third radius "TR" is less that the first and second radiuses. In other arrangements, however, the third radius "TR" is greater than the first radius. In further arrangements, however, the third radius "TR" is greater than the first and second radiuses. These staple orientations may result in an improvement to the issues associated with staple structure discussed above. In particular, the staple configuration formed when employing the fastener cartridge assembly **5220** may allow the staple line to expand and flex more like the original colon than a common staple line. For example, the staples or fasteners may twist as they are pulled radially allowing them to minimize the stress on the healing zones and maximize the flexibility and strength.

Adjunct films/buttress materials have been shown to improve hemostasis and pneumostasis by sealing around the staple tips. In many applications, buttress material is employed to stiffen and/or strengthen soft tissue. A variety of buttress material arrangements have been developed and configured for arrangement on the surgical staple cartridge or the anvil of the surgical stapling device. Attaching the buttress member to the cartridge or anvil and then releasing the buttress material therefrom can be challenging. FIG. **58** illustrates a surgical end effector **5300** and portions of a surgical cutting and fastening instrument **5400**. The end effector **5300** employs a unique and novel arrangement for attaching a buttress member **5500** to the surgical staple cartridge **5320** and releasing it therefrom. Examples of surgical cutting and fastening instruments of the type depicted in FIG. **58** are disclosed in U.S. patent application Ser. No. 14/318,991, entitled SURGICAL FASTENER CARTRIDGES WITH DRIVER STABILIZING ARRANGEMENTS, filed on Jun. 30, 2014, now U.S. Pat. No. 9,833,241, the entire disclosure of which is hereby incorporated by reference herein. Further details beyond those which are required to understand the construction and use of the end effector **5300** may be gleaned from reference to that document as well as the numerous other documents incorporated by reference therein.

As can be seen in FIG. **58**, the end effector **5300** depicted therein includes an elongate staple channel **5302** that is configured to operably support a staple cartridge **5320** therein. The elongate staple channel **5302** is coupled to a spine portion **5404** that is operably supported within an elongate shaft assembly **5402** of the surgical stapling instrument **5400**. The staple cartridge **5320** includes a cartridge body **5322** that may be fabricated from a polymer material. In the illustrated embodiment, a metal bottom tray **5324** is attached to the cartridge body **5322**. The cartridge body **5322** includes a deck **5330** that has a plurality of staple cavities **5332** defined therein. Each staple cavity **5332** is configured to removably store a staple therein. The cartridge body **5322** further includes a longitudinal slot that is configured to removably receive a firing member **5410** therein. The cartridge body **5320** can further comprise a distal end **5326**, a proximal end **5328**, and opposing longitudinal sides **5329** extending between the distal end **5326** and the proximal end **5328**. In various instances, each longitudinal side **5329** can comprise a contiguous or continuous edge without interruptions defined therein.

Located within each staple cavity **5332** is a staple **5342** that is supported on a corresponding staple driver **5340** that is movably supported within the cartridge body **5322**. The staple drivers **5340** are lifted upwardly when the firing member **5410** is driven distally through the staple cartridge **5320**. As discussed in further detail in U.S. patent application Ser. No. 14/318,991, now U.S. Pat. No. 9,833,341, the firing member **5410** is configured to advance a staple sled **5350** distally to lift the staple drivers **5340** and the staples **5342** upward and out of the staple cavity **5332**. The end effector **5300** further includes an anvil **5360** that is mounted to the elongate staple channel **5302**. In the illustrated embodiment, the anvil **5360** includes a pair of trunnions **5362** that are movably received in trunnion slots **5304** in the elongate staple channel **5302**. As can be further seen in FIG. **58**, the anvil **5360** includes an anvil tab **5364** that interacts with a closure tube segment **5420**. Movement of the closure tube segment **5420** in the distal direction "DD" can move the

anvil **5360** in a direction toward the staple cartridge **5320**. Movement of the closure tube **5420** in the proximal direction "PD" causes the anvil to move away from the staple cartridge **5320**. Other embodiments may employ a cartridge and anvil arrangement wherein the anvil is stationary (e.g., non-movably affixed to the elongate shaft of the surgical device) and the elongate channel and/or the staple cartridge are movable toward and away from the anvil.

As can be seen in FIGS. **58** and **59**, a buttress member **5500** is configured to be received between the surgical staple cartridge **5320** and the anvil **5360**. Stated more precisely, the buttress member **5500** is configured to be received between the staple-forming undersurface **5366** of the anvil **5360** and the deck **5330** of the staple cartridge **5320**. In the illustrated embodiment, the buttress member **5500** is configured to be mounted in tension on the deck **5330** of the staple cartridge **5320**. The buttress material comprising the buttress member **5500** may comprise Gore SeamGuard material, Synovis Peri-Strips material, and/or polyurethane, for example. Other suitable buttress or adjunct materials are disclosed in U.S. patent application Ser. No. 14/318,991, entitled SURGICAL FASTENER CARTRIDGES WITH DRIVER STABILIZING ARRANGEMENTS, filed on Jun. 30, 2014, now U.S. Pat. No. 9,833,241, the entire disclosure of which was previously incorporated by reference herein. Various other suitable buttress and adjunct materials are also disclosed in U.S. patent application Ser. No. 13/763,095, entitled LAYER ARRANGEMENTS FOR SURGICAL STAPLE CARTRIDGES, filed on Feb. 28, 2013, now U.S. Pat. No. 9,770,245, the entire disclosure of which is hereby incorporated by reference herein. The entire disclosures of U.S. patent application Ser. No. 13/531,619, entitled TISSUE STAPLER HAVING A THICKNESS COMPENSATOR COMPRISING INCORPORATING A HEMOSTATIC AGENT, filed on Jun. 25, 2012, now U.S. Pat. No. 9,345,477, U.S. patent application Ser. No. 13/531,623, entitled TISSUE STAPLER HAVING A THICKNESS COMPENSATOR INCORPORATING AN OXYGEN GENERATING AGENT, filed on Jun. 25, 2012, now U.S. Pat. No. 9,320,518, U.S. patent application Ser. No. 13/531,627, entitled TISSUE STAPLER HAVING A THICKNESS COMPENSATOR INCORPORATING AN ANTI-MICROBIAL AGENT, filed on Jun. 25, 2012, now U.S. Pat. No. 9,307,965, and U.S. patent application Ser. No. 13/531,630, entitled TISSUE STAPLER HAVING A THICKNESS COMPENSATOR INCORPORATING AN ANTI-INFLAMMATORY AGENT, filed on Jun. 25, 2012, now U.S. Pat. No. 9,314,246, are also incorporated by reference herein.

In the illustrated embodiment, the staple cartridge **5320** includes projections **5336** that extend upward from the deck **5330** adjacent each staple cavity **5332** in the various manners and arrangements that are described in detail in U.S. patent application Ser. No. 14/318,991, now U.S. Pat. No. 9,833,241. In other embodiments, the staple cartridge does not have such projections. In the illustrated embodiment, the buttress member **5500** includes holes **5502** therein that correspond to the projections **5336**. See, e.g., FIGS. **61** and **62**. As can be seen in those Figures, however, the holes **5502** only accommodate the projections **5336** such that the buttress material spans the areas that correspond to at least portions of the crowns of the staples supported in the cavities. Those portions of buttress material that correspond to the staple crown portions are generally identified as **5504** in FIGS. **61** and **62**.

The buttress member **5500** includes means for releasably affixing the buttress member **5500** to the cartridge body **5322** such that the buttress member **5500** is retained thereon in tension prior to the actuation of the surgical instrument and then is released from the cartridge body **5322** when the surgical instrument is actuated or "fired". For example, as can be seen in FIG. **58**, the buttress member **5500** includes a distal end **5503** that has at least one distal retention feature **5506** therein. In the illustrated arrangement, two distal holes **5506** are provided in the distal end **5503** and are configured to receive corresponding retention members **5338** protruding from the distal end **5326** of the cartridge body **5322**. As shown in FIGS. **59** and **60**, the retention members **5338** are configured to be received within the distal holes **5506** in the distal end portion **5503** of the buttress member **5500** to releasably retain the distal end of the buttress member **5500** on the distal end portion **5326** of the cartridge **5320**. Other forms of releasable retention members (shapes, numbers, sizes, configurations) and arrangements may also be employed to releasably retain the buttress member **5500** on the staple cartridge **5320** when a tension force is applied to the buttress member **5500** in the proximal and/or distal directions.

Turning to FIGS. **63-65**, the buttress member **5500** includes a proximal end portion **5510** that has a proximal retention feature **5511** thereon. In the illustrated embodiment, the proximal retention feature **5511** comprises at least one retaining tab **5512** that protrudes proximally therefrom. The retaining tab **5512** is located such that when the holes **5506** are inserted over the retention members **5338** on the cartridge body **5322** and the buttress member **5500** is received on the cartridge deck **5330**, the retaining tab **5512** is aligned with the elongate slot **5334** in the cartridge body **5322**. See FIG. **64**. The retaining tab **5512** is folded over the proximal end of the cartridge body and retained within the elongate slot **5334** by the staple sled **5350** when the staple sled **5350** is in its proximal starting position within the cartridge **5320**. The staple sled **5350** may be of the type and construction disclosed in U.S. patent Ser. No. 14/318,991, now U.S. Pat. No. 9,833,241, which includes a stabilizing member **5352** that extends distally to stabilize the sled **5350** and prevent and/or inhibit the rocking or rotation of the staple sled **5350**. As can be seen in FIG. **65**, the retaining tab **5512** is held within the elongate slot **5534** by the stabilizing member **5352** and/or other portions of the staple sled **5350**. Such arrangement serves to retain the buttress member **5500** in tension on the staple deck **5330**. Stated another way, the buttress member **5500** may be stretched between the retention members **5338** and the proximal end **5328** of the staple cartridge **5320**. When the clinician actuates the surgical instrument to commence the firing process, the firing member **5410** is advanced distally in the distal direction "DD". The firing member **5410** interfaces with the staple sled **5350** and, as discussed in U.S. patent application Ser. No. 14/318,991, now U.S. Pat. No. 9,833,241, the firing member **5410** moves the staple sled **5350** distally through the staple cartridge **5320** to drive the staple drivers **5340** upward such that the staples **5342** supported thereon are driven into forming contact with the underside **5366** of the anvil **5360** and the tissue clamped between the anvil **5360** and the staple cartridge **5320** is severed by the cutting member **5410**. Once the staple sled **5350** has moved out of retaining engagement with the retention tab **5512**, the retention tab **5512** is released enabling the buttress material **5500** to be removed from the staple cartridge **5320** with the stapled tissue. Such arrangement serves to release the tension in the buttress material **5500** at the beginning of the firing process. In addition, such buttress arrangement requires no additional releasing parts or configurations.

Existing stapling technology is not particularly well-suited for use on tissues that experience stretching during the healing process. For example, in thoracic parenchymal stapling, the staple lines are fired on lungs in a collapsed configuration. After the procedure is complete, the lung is inflated which often results in the doubling of the surface area of the lung. Existing stapling technology generally does not have the capacity to stretch to the same extent as the lung tissue. This may result in a dramatic strain gradient in the immediate vicinity of the staple line which can lead to high stresses within the staple line, particularly in the row of staples furthest from the cut edge. Thus, there is a need for technologies that allow the staple line to stretch and/or increase in length in an effort to relieve the strain gradient and the associated stress to eliminate or at least reduce the potential source of air leaks.

Adjunct films/buttress materials have been shown to improve hemostasis and pneumostasis by sealing around the staple tips. In many applications, buttress material is employed to stiffen and/or strengthen soft tissue. However, existing buttress materials may not be sufficiently elastic so as not to impede the compliance of the elastic staple line. FIGS. **66-68** illustrate one form of buttress material **6100** that may address such issues. As can be seen in those Figures, the buttress material **6100** includes a buttress body **6102** that is sized to be operably received on a deck **6004** of a surgical staple cartridge **6000**. In the illustrated example, the surgical staple cartridge **6000** includes a cartridge body **6002** that defines the deck **6004**. The cartridge body **6002** includes a centrally disposed, elongate slot **6006** that is configured to receive a tissue cutting member (not shown) therethrough. A plurality of staple pockets or staple cavities is provided in the deck **6004** on each side of the elongate slot **6006**. As shown, first rows **6010** of first cavities **6012** are provided on each side of the elongate slot **6006**. The first cavities **6012** in each first row **6010** are parallel to each other. Each of the first cavities **6012** is arranged at an angle relative to the elongate slot **6006** and is adjacent thereto. The illustrated cartridge body **6002** further includes two rows **6020** of second staple cavities **6022** that are arranged at angles relative to the first staple cavities **6012**. Two rows **6030** of third staple cavities **6032** are also provided in the cartridge body **6002** as shown. In at least one form, the third staple cavities **6032** are parallel with corresponding first staple cavities **6012**. Other staple or fastener cavity arrangements could be employed, however. In addition, the staple cartridge body **6002** may have lateral ledges **6008** protruding laterally therefrom. As can also be seen in FIG. **66**, the proximal end **6003** of the cartridge body **6002** is narrower than the remaining portion of the cartridge body **6002**.

In the illustrated embodiment, the buttress body **6102** includes four edges **6110**, **6140**, **6150**, **6160** and a central portion **6152**. At least two of the edges **6110**, **6140**, **6150**, **6160** include various edge notch configurations. In the illustrated embodiment, edges **6110**, **6160** include edge notches therein. More specifically as can be seen in FIG. **67**, a first plurality of first edge notches **6114** are formed in a first portion **6112** of the first edge **6110**. In the illustrated embodiment, the first edge notches **6114** extend inward from the first edge portion **6112** at a first acute angle **6115** ("notch angle") and are parallel to each other. As can be further seen in FIGS. **66** and **67**, second edge notches **6118** extend inward from a second portion **6116** of the first edge portion **6112**. In one arrangement, for example, the second edge notches **6118** extend perpendicularly inward ("notch angle") from the second portion **6116**. As can be further seen in FIGS. **66** and **67**, third edge notches **6122** extend inward from a third portion **6120** of the first edge portion **6110**. In one arrangement, for example, the third edge notches **6122** extend perpendicularly inward ("notch angle") from the third portion **6120**. As can be further seen in FIGS. **66** and **67**, fourth edge notches **6126** extend inward from a fourth portion **6124** of the first edge portion **6110**. In one arrangement, for example, the fourth edge notches **6126** extend inward at an acute angle ("notch angle") from the fourth portion **6124**. As can be further seen in FIGS. **66** and **67**, fifth edge notches **6130** extend inward from a fifth portion **6128** of the first edge portion **6110**. In one arrangement, for example, the fifth edge notches **6130** extend inward at an acute angle ("notch angle") from the fifth portion **6128**.

Still referring to FIGS. **66** and **67**, a series of primary edge notches **6164** extend inward from a primary portion **6162** of the second edge portion **6160**. In the illustrated arrangement, the primary edge notches **6164** extend perpendicularly inward ("notch angle") from primary edge portion **6162**. As can be further seen in FIGS. **66** and **67**, secondary edge notches **6168** extend inward from a secondary portion **6166** of the second edge **6160**. In one arrangement, for example, the secondary edge notches **6168** extend inward at an acute angle ("notch angle") from the secondary edge portion **6166**. As can be further seen in FIGS. **66** and **67**, tertiary edge notches **6172** extend inward from a tertiary portion **6170** of the second edge **6160**. In one arrangement, for example, the tertiary edge notches **6172** extend inward at an acute angle ("notch angle") from the tertiary portion **6170**. As can be further seen in FIGS. **66** and **67**, quaternary edge notches **6176** extend inward from a quaternary portion **6174** of the second edge **6160**. In one arrangement, for example, the quaternary edge notches **6176** extend perpendicularly inward ("notch angle") from the quaternary portion **6174**. As can be further seen in FIGS. **66** and **67**, quinary edge notches **6180** extend inward from a quinary portion **6178** of the second edge portion **6160**. In one arrangement, for example, the quinary edge notches **6180** extend perpendicularly inward ("notch angle") from the quinary portion **6178**.

The buttress material **6100** illustrated in FIGS. **66** and **67** also has five different widths, W**1**, W**2**, W**3**, W**4**, W**5** along the total length of the buttress **6100**. W**1** corresponds to edge portions **6112**, **6162**. W**2** corresponds to edge portions **6116**, **6166**. W**3** corresponds to edge portions **6120**, **6170**. W**4** corresponds to edge portions **6124**, **6174**. W**5** corresponds to edge portions **6128**, **6178**. Other buttress material embodiments may have a constant width or different numbers of widths that facilitate operational support on the staple cartridge and/or anvil of the surgical stapling instrument. In addition, the numbers, shapes, sizes and arrangements of edge notches may vary depending upon the embodiment.

In the embodiment shown in FIGS. **66** and **67**, the buttress material **6100** includes a plurality of cutout openings therein. As can be seen in those Figures, the cutouts are arranged in parallel rows. In particular, the cutouts **6204** in rows **6200** comprise slits that are arranged at an angle relative to the edge portions such that the cutouts **6204** in each row **6200** are parallel to each other. The cutouts **6204** may or may not extend completely through the buttress material **6100**. Similarly, the cutouts **6206** in rows **6202** comprise slits that are perpendicularly transverse to the edge portions of the buttress material **6100**. The cutouts **6206** may or may not extend completely through the buttress material **6100**. In other embodiments, the number, shape, size, orientation, spacing, depth and location of such cutouts may vary.

FIG. **68** illustrates one cutout arrangement wherein the staple cavity positions **6012**, **6022**, and **6032** are shown in

broken lines. As can be seen in that Figure, no portion of any cutouts **6204**, **6206** is positioned over any one of the staple cavities, **6012**, **6022**, **6032** when the buttress material **6100** is positioned in registration on the deck **6004** of the surgical staple cartridge **6000**. FIG. **69** illustrates a similar buttress material arrangement wherein the staple cavities **6012**, **6022**, and **6032** are shown in broken lines. The portions **6103** of the buttress material **6100'** wherein the staple/fastener legs will ultimately penetrate through are also shown in broken lines. Portions **6103** may also be referred to herein as "staple penetration zones". As can be seen in that Figure, no portion of any of the cutouts **6208**, **6209** is located over any or the staple penetration zones **6103**. The cutouts **6208** and **6209** are arranged in longitudinal rows in the buttress material **6100'**. The cutouts **6208** in each row are approximately parallel to each other and are arranged at an acute angle relative to the edges of the buttress material **6100'**. Similarly, the cutouts **6209** in each row are approximately parallel to each other and are arranged such that they are perpendicular to the cutouts **6208** in adjacent rows. The cutouts **6208** may or may not extend completely through the buttress material **6100'**. As can also be seen in FIG. **69** one entire row of cutouts **6208** is located between the locations of fastener cavities **6032** and the edge of the buttress material **6100'** to facilitate further flexibility of the buttress material **6100'**. As with the other embodiments, the number, shape, size, orientation, spacing, depth and location of such cutouts may vary.

FIG. **70** illustrates another buttress member embodiment **6100"**. In this embodiment, the buttress material includes a plurality of edge notches **6300** that comprise undulating wave-like curves which form serpentine edges. Such edge notches/serpentine edges allow for rotation of staples while reducing material stress during expansion.

FIGS. **71** and **72** illustrates another buttress member **6400** that is fabricated out of a woven material that may be bioabsorbable or may not be bioabsorbable. Further, the buttress material may comprise any of the buttress materials described herein and include the unique and novel attributes described below. For example, the buttress member **6400** may include a hole or opening **6402** therethrough for cooperating with a correspondingly-shaped portion of the surgical staple cartridge or anvil (e.g., a post, protrusion, etc.) to support the buttress member **6400** in a desired orientation/registration relative to the staples/fasteners in the staple cartridge. In the illustrated arrangement, the buttress member **6400** includes a plurality of staple zones **6404**, **6406**, **6408** that are located therein for registration with corresponding **6012**, **6022**, **6032** fastener cavities in the surgical staple cartridge when the buttress member **6400** is supported on the cartridge deck. The staple zones may be formed by compressing the material and applying heat thereto to cause the material to permanently assume the compressed state. As can be seen in FIG. **72**, the compressed staple areas (generally represented as **6410**) have a smaller cross-sectional thickness than the adjacent non-compressed portions (generally represented as **6412**) of the buttress member **6400**. In addition, the buttress member **6400** may have linear edges **6420**, **6422**, **6424** and/or serpentine edge(s) **6426**. The buttress member may have a shape that corresponds to the shape of the surgical staple cartridge and/or anvil of the surgical instrument.

All of the foregoing buttress member embodiments may be employed on the deck of the surgical staple cartridge or used in connection with an anvil of a surgical stapling device. All of the buttress members may have a shape that corresponds to the shape of the surgical staple cartridge and/or anvil and may have straight or linear edges or edge portions and/or wavy, jagged and or serpentine edges or a combination of such edge configurations. The buttress members may have a constant width or they may have a plurality of widths. The cutouts through the buttress material remove excess material to facilitate or allow for more deformation of the buttress, twisting, etc. with less stress throughout the buttress material during longitudinal expansion. Stated another way, the cutouts enable the buttress to "accordion" in the same manner as the staples themselves are moving. Serpentine or irregular edges allow for rotation of staples while reducing material stress during expansion. The buttress configurations described above comprise "softened structures" that allow for increased extensibility, while still sealing relevant regions. In addition, the buttress members described above not only don't inhibit staple twisting, but also allow the staples and adjunct (buttress) to move in the same manner when stretched. Such buttress member arrangements comprise buttress members that essentially comprise regions of various mechanical behaviors which allow for optimal performance of the staple lines.

FIGS. **73-78** illustrate another staple cartridge **6500** that is similar in construction to staple cartridge **6000** discussed above, except that staple cartridge **6500** additional includes a plurality of projections. In the illustrated example, the surgical staple cartridge **6500** includes a cartridge body **6502** that defines the deck **6504**. The cartridge body **6502** is mounted within a bottom tray **6524** and includes a centrally disposed elongate slot **6506** that is configured to receive a tissue cutting member (not shown) therethrough. A plurality of staple pockets or staple cavities is provided in the deck **6504** on each side of the elongate slot **6506**. As shown, first rows **6510** of first cavities **6512** are provided on each side of the elongate slot **6506**. The first cavities **6512** in each first row **6510** are parallel to each other. Each of the first cavities **6512** is arranged at an angle relative to the elongate slot **6506** and is adjacent thereto. The illustrated cartridge body **6502** further includes two rows **6520** of second staple cavities **6522** that are arranged at angles relative to the first staple cavities **6512**. Two rows **6530** of third staple cavities **6532** are also provided in the cartridge body as shown. In at least one form, the third staple cavities **6532** are parallel with corresponding first staple cavities **6512**. The cartridge body **6502** further has two longitudinal sides **6508**.

The cartridge body **6502** can further comprise a plurality of projections **6550** that extend from the deck surface **6504**. Projections **6550** can be configured to engage tissue positioned intermediate the anvil **5360** and the cartridge **6500** and control the movement of the tissue relative to the cartridge **6500**. Tissue can move relative to the cartridge **6500** in various instances. In at least one instance, tissue can flow relative to the cartridge **6500** when the anvil is moved between an open position and a closed position in which the tissue is squeezed between the anvil and the cartridge **6500**. In such instances, the tissue may flow laterally toward the longitudinal sides **6508**, distally toward the distal end **6503**, and/or proximally toward the proximal end **6505**. In at least one other instance, tissue can flow relative to the cartridge **6500** when the cutting member is advanced distally through the tissue captured between the anvil and the cartridge **6500**. In such instances, tissue may flow laterally, distally, and/or proximally, but it primarily flows distally due to the distal movement of the cutting edge. In various instances, projections **6550** can be configured to limit or prevent the flow of the tissue relative to the staple cartridge. Projections **6550** can be positioned at the proximal end and/or the distal end of the staple cavities **6512**, **6522**, **6532**. In various instances,

each projection **6550** can comprise a cuff extending around an end of a corresponding staple cavity **6512**, **6522** and **6532**. In certain instances, each projection **6550** can comprise an arcuate ridge that extends around an end of a corresponding staple cavity **6512**, **6522** and **6532**.

FIGS. **76-78** illustrate a cartridge arrangement that includes projections **6550**. The cartridge arrangement depicted in FIGS. **73-75** is similar to the cartridge of FIGS. **76-78**, but also includes rows of projection posts **6560** that are formed on the deck surface **6504**. In the arrangement of FIGS. **73-75**, for example, a projection post **6560** is provided between each staple cavity **6512**, **6522** and **6532** in each row of staple cavities. The projection posts **6560** serve to further control the flow of tissue during the clamping and firing process.

Referring primarily to FIG. **73**, the cartridge body **6502** includes a sloped transition **6570** extending between the distal tip of the cartridge body **6502** and the deck surface **6504**. The sloped transition **6570** facilitates the movement of the cartridge **6500** relative to the tissue when positioning the cartridge **6500** and the anvil within a surgical site. In such instances, the tissue can slide over the sloped surface **6570**. In other arrangements, the sloped surface **6570** comprises a radiused surface. In the illustrated arrangement, the sloped surface **6570** comprises an angled surface. In still other arrangements, the sloped surface **6570** comprises a concave surface and/or a convex surface.

The staple cavities **6512**, **6522**, and **6532** defined in the cartridge body **6502** are arranged in longitudinal rows on each side of the longitudinal slot **6506**. Each projection **6550** can be configured to support at least a portion of a staple **6542** removably stored in a staple cavity **6512**, **6522** and **6532**. In various instances, each projection **6550** can extend an endwall **6513**, **6515** of the staple cavity **6512**, **6522**, and **6532** above the deck **6504**. In certain instances, referring generally to FIG. **78**, a staple **6542** positioned within the staple cavity **6512**, **6522**, **6532** includes a base **6543**, a first leg **6545** extending from the base **6543** at a first angle, and a second leg **6547** extending from the base **6543** at a second angle. The first leg **6545** can be in contact with a first endwall **6513** of a staple cavity **6532** and the second leg **6547** can be in contact with a second endwall **6515** of the staple cavity **6512**, **6522**, **6532**. In certain instances, the distance, or spread, between the first leg **6545** and the second leg **6547** of the staple **6542** can be wider than the distance between the endwalls **6513**, **6515** such that, when the staple **6542** is positioned within the staple cavity **6512**, **6522**, **6532**, the legs **6545**, **6547** are biased inwardly by the endwalls **6513**, **6515**. When the staple **6542** is stored within the staple cavity **6512**, **6522**, **6532** in its unfired, or unlifted, position, the tips of the staple legs **6545**, **6547** may be positioned within the projections **6550**. In such instances, the projections **6550** can support and protect the tips of the staple legs **6545**, **6547** above the deck **6504**. In some instances, the tips of the staple legs **6545**, **6547** may be positioned below the projections **6550** when the staple **6542** is in its unfired position and, thus, the projections **6550** may not support the staple legs **6545**, **6547** when the staple **6542** is in its unfired position. When such a staple **6542** is fired, or lifted out of the staple cavity **6512**, **6522**, **6532**, the staple legs **6545**, **6547** may then come into contact with and be supported by the projections **6550**. In any event, the projections **6550** can continue to support the staple legs **6545**, **6547** as the staple **6542** is deployed until the staple **6542** has been sufficiently fired and/or lifted out of the staple cavity **6512**, **6522**, **6532** such that the staple legs **6545**, **6547** are no longer in contact with the projections **6550**.

A layer, such as buttress material, for example, may be made from any biocompatible material. Buttress material may be formed from a natural material and/or a synthetic material. Buttress material may be bioabsorbable and/or non-bioabsorbable. It should be understood that any combination of natural, synthetic, bioabsorbable and non-bioabsorbable materials may be used to form buttress material. Some non-limiting examples of materials from which the buttress material may be made include, but are not limited to, poly(lactic acid), poly(glycolic acid), poly(hydroxybutyrate), poly(phosphazine), polyesters, polyethylene glycols, polyethylene oxides, polyacrylamides, polyhydroxyethylmethylacrylate, polyvinylpyrrolidone, polyvinyl alcohols, polyacrylic acid, polyacetate, polycaprolactone, polypropylene, aliphatic polyesters, glycerols, poly(amino acids), copoly(ether-esters), polyalkylene oxalates, polyamides, poly(iminocarbonates), polyalkylene oxalates, polyoxaesters, polyorthoesters, polyphosphazenes and copolymers, block copolymers, homopolymers, blends and/or combinations thereof, for example.

Natural biological polymers can be used in forming the buttress material. Suitable natural biological polymers include, but are not limited to, collagen, gelatin, fibrin, fibrinogen, elastin, keratin, albumin, hydroxyethyl cellulose, cellulose, oxidized cellulose, hydroxypropyl cellulose, carboxyethyl cellulose, carboxymethyl cellulose, chitan, chitosan, and/or combinations thereof, for example. Natural biological polymers may be combined with any of the other polymeric materials described herein to produce the buttress material. Collagen of human and/or animal origin, e.g., type I porcine or bovine collagen, type I human collagen or type III human collagen may be used to form the buttress material. The buttress material may be made from denatured collagen or collagen which has at least partially lost its helical structure through heating or any other method, consisting mainly of non-hydrated a chains, of molecular weight close to 100 kDa, for example. The term "denatured collagen" means collagen which has lost its helical structure. The collagen used for the porous layer as described herein may be native collagen or atellocollagen, notably as obtained through pepsin digestion and/or after moderate heating as defined previously, for example. The collagen may have been previously chemically modified by oxidation, methylation, succinylation, ethylation and/or any other known process.

Where the buttress material is fibrous, the fibers may be filaments or threads suitable for knitting or weaving or may be staple fibers, such as those frequently used for preparing non-woven materials. The fibers may be made from any biocompatible material. The fibers may be formed from a natural material or a synthetic material. The material from which the fibers are formed may be bioabsorbable or non-bioabsorbable. It should be understood that any combination of natural, synthetic, bioabsorbable and non-bioabsorbable materials may be used to form the fibers. Some non-limiting examples of materials from which the fibers may be made include, but are not limited to, poly(lactic acid), poly(glycolic acid), poly(hydroxybutyrate), poly(phosphazine), polyesters, polyethylene glycols, polyethylene oxides, polyacrylamides, polyhydroxyethylmethylacrylate, polyvinylpyrrolidone, polyvinyl alcohols, polyacrylic acid, polyacetate, polycaprolactone, polypropylene, aliphatic polyesters, glycerols, poly(amino acids), copoly(ether-esters), polyalkylene oxalates, polyamides, poly(iminocarbonates), polyalkylene oxalates, polyoxaesters, polyorthoesters, polyphosphazenes and copolymers, block copolymers, homopolymers, blends and/or combinations thereof. Where

the buttress material is fibrous, the buttress material may be formed using any method suitable to forming fibrous structures including, but not limited to, knitting, weaving, non-woven techniques and the like, for example. Where the buttress material is a foam, the porous layer may be formed using any method suitable to forming a foam or sponge including, but not limited to the lyophilization or freeze-drying of a composition, for example.

The buttress material may possesses haemostatic properties. Illustrative examples of materials which may be used in providing the buttress material with the capacity to assist in stopping bleeding or hemorrhage include, but are not limited to, poly(lactic acid), poly(glycolic acid), poly(hydroxybutyrate), poly(caprolactone), poly(dioxanone), polyalkylene-oxides, copoly(ether-esters), collagen, gelatin, thrombin, fibrin, fibrinogen, fibronectin, elastin, albumin, hemoglobin, ovalbumin, polysaccharides, hyaluronic acid, chondroitin sulfate, hydroxyethyl starch, hydroxyethyl cellulose, cellulose, oxidized cellulose, hydroxypropyl cellulose, carboxyethyl cellulose, carboxymethyl cellulose, chitan, chitosan, agarose, maltose, maltodextrin, alginate, clotting factors, methacrylate, polyurethanes, cyanoacrylates, platelet agonists, vasoconstrictors, alum, calcium, RGD peptides, proteins, protamine sulfate, epsilon amino caproic acid, ferric sulfate, ferric subsulfates, ferric chloride, zinc, zinc chloride, aluminum chloride, aluminum sulfates, aluminum acetates, permanganates, tannins, bone wax, polyethylene glycols, fucans and/or combinations thereof, for example. The use of natural biological polymers, and in particular proteins, may be useful in forming buttress material having haemostatic properties. Suitable natural biological polymers include, but are not limited to, collagen, gelatin, fibrin, fibrinogen, elastin, keratin, albumin and/or combinations thereof, for example. Natural biological polymers may be combined with any other haemostatic agent to produce the porous layer of the buttress. The entire disclosure of U.S. Pat. No. 8,496,683, entitled BUTTRESS AND SURGICAL STAPLING APPARATUS, which issued on Jul. 30, 2013, is incorporated by reference herein.

The entire disclosures of:

U.S. Pat. No. 5,403,312, entitled ELECTROSURGICAL HEMOSTATIC DEVICE, which issued on Apr. 4, 1995;

U.S. Pat. No. 7,000,818, entitled SURGICAL STAPLING INSTRUMENT HAVING SEPARATE DISTINCT CLOSING AND FIRING SYSTEMS, which issued on Feb. 21, 2006;

U.S. Pat. No. 7,422,139, entitled MOTOR-DRIVEN SURGICAL CUTTING AND FASTENING INSTRUMENT WITH TACTILE POSITION FEEDBACK, which issued on Sep. 9, 2008;

U.S. Pat. No. 7,464,849, entitled ELECTRO-MECHANICAL SURGICAL INSTRUMENT WITH CLOSURE SYSTEM AND ANVIL ALIGNMENT COMPONENTS, which issued on Dec. 16, 2008;

U.S. Pat. No. 7,670,334, entitled SURGICAL INSTRUMENT HAVING AN ARTICULATING END EFFECTOR, which issued on Mar. 2, 2010;

U.S. Pat. No. 7,753,245, entitled SURGICAL STAPLING INSTRUMENTS, which issued on Jul. 13, 2010;

U.S. Pat. No. 8,393,514, entitled SELECTIVELY ORIENTABLE IMPLANTABLE FASTENER CARTRIDGE, which issued on Mar. 12, 2013;

U.S. patent application Ser. No. 11/343,803, entitled SURGICAL INSTRUMENT HAVING RECORDING CAPABILITIES, now U.S. Pat. No. 7,845,537;

U.S. patent application Ser. No. 12/031,573, entitled SURGICAL CUTTING AND FASTENING INSTRUMENT HAVING RF ELECTRODES, filed Feb. 14, 2008;

U.S. patent application Ser. No. 12/031,873, entitled END EFFECTORS FOR A SURGICAL CUTTING AND STAPLING INSTRUMENT, filed Feb. 15, 2008, now U.S. Pat. No. 7,980,443;

U.S. patent application Ser. No. 12/235,782, entitled MOTOR-DRIVEN SURGICAL CUTTING INSTRUMENT, now U.S. Pat. No. 8,210,411;

U.S. patent application Ser. No. 12/249,117, entitled POWERED SURGICAL CUTTING AND STAPLING APPARATUS WITH MANUALLY RETRACTABLE FIRING SYSTEM, now U.S. Pat. No. 8,608,045;

U.S. patent application Ser. No. 12/647,100, entitled MOTOR-DRIVEN SURGICAL CUTTING INSTRUMENT WITH ELECTRIC ACTUATOR DIRECTIONAL CONTROL ASSEMBLY, filed Dec. 24, 2009, now U.S. Pat. No. 8,220,688;

U.S. patent application Ser. No. 12/893,461, entitled STAPLE CARTRIDGE, filed Sep. 29, 2012, now U.S. Pat. No. 8,733,613;

U.S. patent application Ser. No. 13/036,647, entitled SURGICAL STAPLING INSTRUMENT, filed Feb. 28, 2011, now U.S. Pat. No. 8,561,870;

U.S. patent application Ser. No. 13/118,241, entitled SURGICAL STAPLING INSTRUMENTS WITH ROTATABLE STAPLE DEPLOYMENT ARRANGEMENTS, now U.S. Pat. No. 9,072,535;

U.S. patent application Ser. No. 13/524,049, entitled ARTICULATABLE SURGICAL INSTRUMENT COMPRISING A FIRING DRIVE, filed on Jun. 15, 2012, now U.S. Pat. No. 9,101,358;

U.S. patent application Ser. No. 13/800,025, entitled STAPLE CARTRIDGE TISSUE THICKNESS SENSOR SYSTEM, filed on Mar. 13, 2013, now U.S. Pat. No. 9,345,481;

U.S. patent application Ser. No. 13/800,067, entitled STAPLE CARTRIDGE TISSUE THICKNESS SENSOR SYSTEM, filed on Mar. 13, 2013, now U.S. Patent Application Publication No. 2014/0263552;

U.S. Patent Application Publication No. 2007/0175955, entitled SURGICAL CUTTING AND FASTENING INSTRUMENT WITH CLOSURE TRIGGER LOCKING MECHANISM, filed Jan. 31, 2006; and

U.S. Patent Application Publication No. 2010/0264194, entitled SURGICAL STAPLING INSTRUMENT WITH AN ARTICULATABLE END EFFECTOR, filed Apr. 22, 2010, now U.S. Pat. No. 8,308,040, are hereby incorporated by reference herein.

Although the various embodiments of the devices have been described herein in connection with certain disclosed embodiments, many modifications and variations to those embodiments may be implemented. Also, where materials are disclosed for certain components, other materials may be used. Furthermore, according to various embodiments, a single component may be replaced by multiple components, and multiple components may be replaced by a single component, to perform a given function or functions. The foregoing description and following claims are intended to cover all such modification and variations.

The devices disclosed herein can be designed to be disposed of after a single use, or they can be designed to be used multiple times. In either case, however, the device can be reconditioned for reuse after at least one use. Reconditioning can include any combination of the steps of disassembly of the device, followed by cleaning or replacement

of particular pieces, and subsequent reassembly. In particular, the device can be disassembled, and any number of the particular pieces or parts of the device can be selectively replaced or removed in any combination. Upon cleaning and/or replacement of particular parts, the device can be reassembled for subsequent use either at a reconditioning facility, or by a surgical team immediately prior to a surgical procedure. Those skilled in the art will appreciate that reconditioning of a device can utilize a variety of techniques for disassembly, cleaning/replacement, and reassembly. Use of such techniques, and the resulting reconditioned device, are all within the scope of the present application.

Preferably, the invention described herein will be processed before surgery. First, a new or used instrument is obtained and if necessary cleaned. The instrument can then be sterilized. In one sterilization technique, the instrument is placed in a closed and sealed container, such as a plastic or TYVEK bag. The container and instrument are then placed in a field of radiation that can penetrate the container, such as gamma radiation, x-rays, or high-energy electrons. The radiation kills bacteria on the instrument and in the container. The sterilized instrument can then be stored in the sterile container. The sealed container keeps the instrument sterile until it is opened in the medical facility.

While this invention has been described as having exemplary designs, the present invention may be further modified within the spirit and scope of the disclosure. This application is therefore intended to cover any variations, uses, or adaptations of the invention using its general principles. Further, this application is intended to cover such departures from the present disclosure as come within known or customary practice in the art to which this invention pertains.

Any patent, publication, or other disclosure material, in whole or in part, that is said to be incorporated by reference herein is incorporated herein only to the extent that the incorporated materials does not conflict with existing definitions, statements, or other disclosure material set forth in this disclosure. As such, and to the extent necessary, the disclosure as explicitly set forth herein supersedes any conflicting material incorporated herein by reference. Any material, or portion thereof, that is said to be incorporated by reference herein, but which conflicts with existing definitions, statements, or other disclosure material set forth herein will only be incorporated to the extent that no conflict arises between that incorporated material and the existing disclosure material.

What is claimed is:

1. A staple cartridge for use with a surgical stapling instrument, the staple cartridge comprising:

a cartridge body, comprising:

a proximal end;

a distal end;

a deck configured to support patient tissue, wherein the deck extends between the proximal end and the distal end;

a longitudinal slot extending from the proximal end toward the distal end, wherein the longitudinal slot defines a longitudinal cartridge axis, wherein a first deck side of the deck is on a first lateral side of the longitudinal slot and a second deck side of the deck is on a second lateral side of the longitudinal slot;

a longitudinal row of first staple cavities defined in the first deck side extending along a first longitudinal row axis, wherein each first staple cavity comprises a first proximal end and a first distal end positioned along the first longitudinal axis;

a longitudinal row of second staple cavities defined in the first deck side, wherein the longitudinal row of first staple cavities is positioned intermediate the longitudinal slot and the longitudinal row of second staple cavities, and wherein each second staple cavity comprises:

a second proximal end;

a second distal end; and

a second cavity axis extending between the second proximal end and the second distal end, wherein the second cavity axis extends at a transverse angle relative to the longitudinal cartridge axis and at a transverse angle relative to the first longitudinal row axis;

first staples removably stored in the first staple cavities;

second staples removably stored in the second staple cavities;

staple drivers movably positioned within the cartridge body; and

a sled movable from a proximal unfired position to a distal fired position during a staple firing stroke, wherein the sled engages the staple drivers during the staple firing stroke to lift the first staples and the second staples toward the deck.

2. The staple cartridge of claim **1**, wherein the first deck side comprises:

a first step, wherein the longitudinal row of first staple cavities is defined in the first step;

a second step, wherein the second step is lower than the first step, and wherein the longitudinal row of second staple cavities is defined in the second step; and

a third step, wherein the third step is lower than the second step, and wherein a longitudinal row of third staple cavities is defined in the third step.

3. The staple cartridge of claim **1**, wherein the first deck side comprises:

a first longitudinal surface, wherein the longitudinal row of first staple cavities is defined in the first longitudinal surface;

a second longitudinal surface, wherein the second longitudinal surface is lower than the first longitudinal surface, and wherein the longitudinal row of second staple cavities is defined in the second longitudinal surface; and

a third longitudinal surface, wherein the third longitudinal surface is lower than the second longitudinal surface, and wherein a longitudinal row of third staple cavities is defined in the third longitudinal surface.

4. The staple cartridge of claim **1**, wherein the first deck side defines a deck surface, wherein the longitudinal row of first staple cavities are defined in the deck surface, and wherein the cartridge body further comprises integral projections extending from the deck surface within the longitudinal row of first staple cavities.

5. The staple cartridge of claim **1**, wherein the proximal end of each second staple cavity is closer to the longitudinal slot than the distal end.

6. The staple cartridge of claim **1**, wherein the distal end of each second staple cavity is closer to the longitudinal slot than the proximal end.

7. The staple cartridge of claim **1**, further comprising buttress material releasably attached to the cartridge body.

8. A stapling assembly, comprising:
an anvil jaw; and
a staple cartridge, comprising:
a cartridge body, comprising:
a proximal end;
a distal end;
a deck configured to support patient tissue, wherein the deck extends between the proximal end and the distal end;
a longitudinal slot extending from the proximal end toward the distal end, wherein the longitudinal slot defines a longitudinal cartridge axis, wherein a first deck side of the deck is on a first lateral side of the longitudinal slot and a second deck side of the deck is on a second lateral side of the longitudinal slot;
a straight longitudinal row of first staple cavities defined in the first deck side extending along a first longitudinal row axis;
a longitudinal row of second staple cavities defined in the first deck side, wherein the straight longitudinal row of first staple cavities is positioned intermediate the longitudinal slot and the longitudinal row of second staple cavities, and wherein each second staple cavity comprises:
a second proximal end;
a second distal end; and
a second cavity axis extending between the second proximal end and the second distal end, wherein the second cavity axis extends at a transverse angle relative to the longitudinal cartridge axis and at a transverse angle relative to the first longitudinal row axis;
first staples removably stored in the first staple cavities;
second staples removably stored in the second staple cavities;
staple drivers movably positioned within the cartridge body; and
a sled movable from a proximal unfired position to a distal fired position during a staple firing stroke, wherein the sled engages the staple drivers during the staple firing stroke to lift the first staples and the second staples toward the anvil jaw.

9. The stapling assembly of claim 8, wherein the first deck side comprises:
a first step, wherein the straight longitudinal row of first staple cavities is defined in the first step;
a second step, wherein the second step is lower than the first step, and wherein the longitudinal row of second staple cavities is defined in the second step; and
a third step, wherein the third step is lower than the second step, and wherein a longitudinal row of third staple cavities is defined in the third step.

10. The stapling assembly of claim 8, wherein the first deck side comprises:
a first longitudinal surface, wherein the straight longitudinal row of first staple cavities is defined in the first longitudinal surface;
a second longitudinal surface, wherein the second longitudinal surface is lower than the first longitudinal surface, and wherein the longitudinal row of second staple cavities is defined in the second longitudinal surface; and
a third longitudinal surface, wherein the third longitudinal surface is lower than the second longitudinal surface, and wherein a longitudinal row of third staple cavities is defined in the third longitudinal surface.

11. The stapling assembly of claim 8, wherein the first deck side defines a deck surface, wherein the straight longitudinal row of first staple cavities are defined in the deck surface, and wherein the cartridge body further comprises integral projections extending from the deck surface within the straight longitudinal row of first staple cavities.

12. The stapling assembly of claim 8, wherein the proximal end of each second staple cavity is closer to the longitudinal slot than the distal end.

13. The stapling assembly of claim 8, wherein the distal end of each second staple cavity is closer to the longitudinal slot than the proximal end.

14. The stapling assembly of claim 8, further comprising buttress material releasably attached to the cartridge body.

* * * * *