ITEM	QTY.	PART No.	DESCRIPTION
1	4	S017-BG-0004	OSCILLATING BLOCK CHANNEL - UPPER
2	4	S017-BG-0005	OSCILLATING BLOCK CHANNEL - LOWER
3	8	S017-BG-0006D	SHOULDER & BODY SCREEN SLIDE
4	1	S017-AG-0288	SCREEN FRAME SLIDEWAY
5	4	S017-AG-0289A	SCREEN FRAME SLIDEWAY GIB - UPPER REAR
6			
7			
8	8	S007-BG-0006B	OSCILLATING SHOULDER BLOCK
9	8	S007-DG-0011	OSCILLATING LEVER ADJUSTING BLOCK

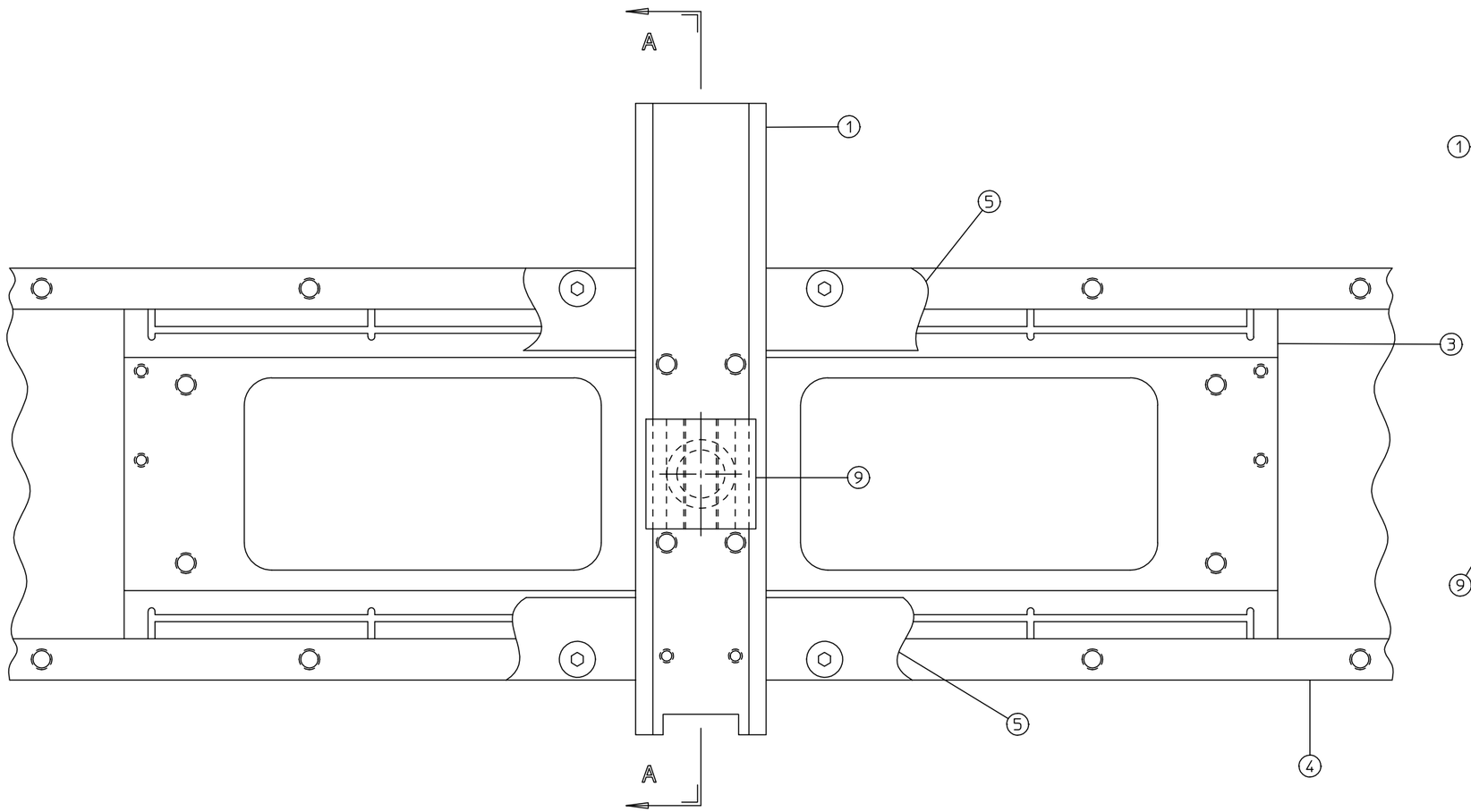

TOP VIEW TYPICAL SCREEN SLIDEWAY

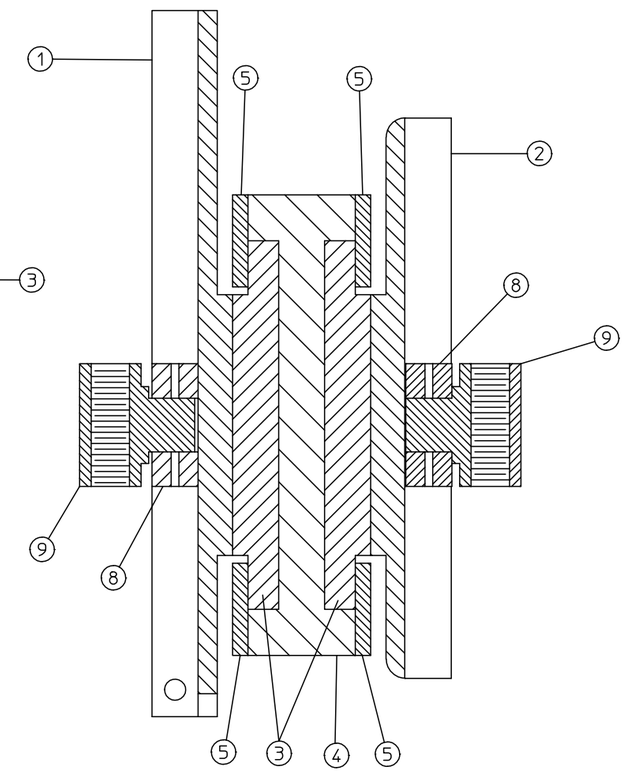

SECTION A–A

NOTE: PARTS FOR 4 DECORATING STSTIONS ON A 4 COLOR SLIDEWAY

REV.	DATE	CHANGE
3	10/8/07	REMOVED S7-BG-289B & C & REPLACED w/S17-BG-298A
2	8/29/07	REMOVED 4 FROM MACHINE TITLE
1	5/04/02	ADDED 4CLS-200

CS-125/150 & CLS-200 SCREEN SLIDEWAY ASSEMBLY

JOB ROUTING ☐ WELDING ☐ MACHINING ☐ FITTING ☐ COMMERCIAL ☐ OTHER SEE NOTE

MATR'L ORDER DESC.

MATR'L SUPPLIER

DWN. GMc DATE 2/5/96 CHEK'D. ____ SCALE 5/8"=1"

MACHINE SHOP TOLERANCES UNLESS SPECIFIED OTHERWISE

± .015 DECIMAL DIMENSION — OTHER FINISH XX MICROINCH OR LESS

± 1/2° ANGULAR DIMENSION — BREAK SHARP EDGES .015" RAD. OR CHAM.

✓ MACHINE FINISH 80 MICROINCH — C'SINK THD. TO NOM. DIA. WITH A +.03 TOL.

Carl Strutz & Co., Inc.
Mars, PA

S017-BG-0290