BILL OF MATERIAL			
ITEM	QTY.	STRUTZ №	DESCRIPTION
1	1	S001-DG-0008A	Squeegee Piston Rod
2	1	S001-DG-0009	Squeegee Cylinder Bushing
3	1	S001-DG-0011	Squeegee Piston Return Spring
4	2	S001-DG-0022	Piston 'O'-Ring
5	1	S001-DG-0066B	Shoulder Squeegee Holder
6	1	S001-DG-0144L	Left Squeegee Holder Retaining Spring
7	1	S001-DG-0254	Adjustment Screw
8	1	S001-DG-0266	Adjustment Screw Lock Plate
9	1	S001-DG-0267	Squeegee Adjustment Knob
10	1	S001-BG-0270	Squeegee Cylinder
11	1	S001-DG-0564	Squeegee Cylinder Cap
12	1	S001-DG-0565	Squeegee Holder Retaining Clamp
13	1	S001-DG-0575	Squeegee Pivot T-Bolt
14	1	S001-DG-0576	Squeegee Pivot Adjustment Plate
15	1	S001-DG-0577	Squeegee Pivot Clamp Plate
16	1	S045-DG-0575G	1/4 x 3/8 Male Connector
17	1	S212-DG-0420A	#10 Belleville Spring Lock Washer
18	1	S212-FW-0256E	3/8 Flat Washer
19	1	S212-FW-0256G	5/8 Flat Washer
20	1	S212-HN-0246F	5/8-11 Hex Nut
21	1	S212-HX-0253G	3/8-16 x 1 HHCS
22	1	S212-MS-0282B	#10-24 x 1/4 Slotted Pan Head Screw
23	1	S212-SH-0245CG	1/4-28 x 5/8 Socket Head Cap Screw
24	1	S212-SH-0245CH	10-24 x 5/16 Socket Head Cap Screw
25	4	S212-SH-0245W	5/16-18 x 1 Socket Head Cap Screw
26	1	S212-SP-0277A	3/16 x 1 Spring Pin
27	2	S212-SS-0280B	#10-24 x 1/4 Socket Set Screw

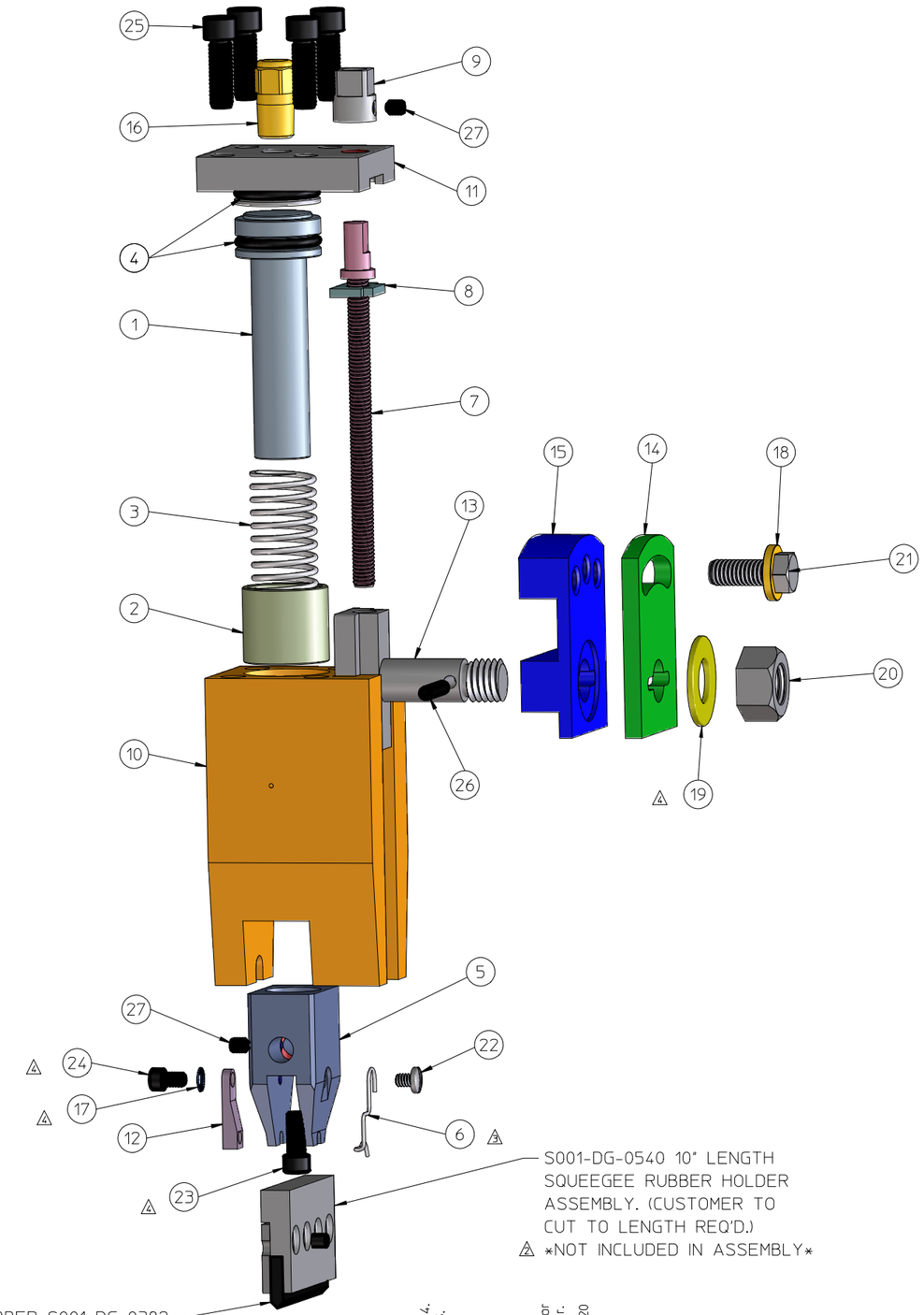

Exploded View

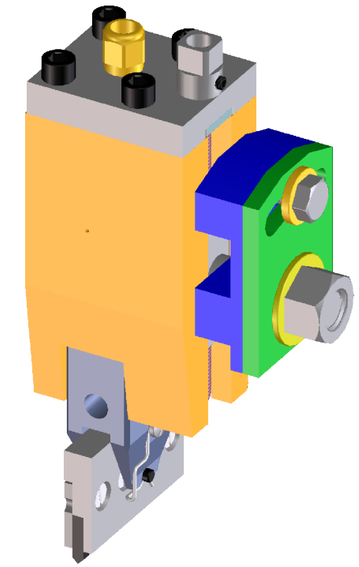

Assembled View

NOTE:
S001-DG-0540 SQUEEGEE RUBBER HOLDER ASSEMBLY &
S001-DG-0382 SQUEEGEE RUBBER
ARE NOT INCLUDED IN ASSEMBLY

REV.	DATE	CHANGE
3	06-02-20	Update Dwg. Added Items 17, 19, & 24. Item 23 was 1" lg. SHCS.
2	11-29-18	Corrected Sq. Retaining Spring Part No.& Position Was S001-DG-0144R
1	02-20-15	Added Note for Sq. Holder & Sq. Rubber.
0	09-28-11	Pos 22 was 1/4-20

SQUEEGEE SHOULDER ASSEMBLY

JOB ROUTING ☐ WELDING ☐ MACHINING ☐ FITTING ☐ COMMERCIAL ☐ REWORK COMMERCIAL ☐ OTHER SEE NOTE

MATERIAL ORDER DESC. OPEN

MATERIAL SUPPLIER OPEN

ALL DESIGNS SHOWN ARE PROPRIETARY AND REMAIN THE PROPERTY OF CARL STRUTZ & COMPANY, INC. THE DESIGNS ARE NOT TO BE DISTRIBUTED TO ANY THIRD PARTY WITHOUT SPECIFIC AUTHORIZATION FROM CARL STRUTZ & COMPANY, INC.

DWN. GMc DATE 06/09/09 CHEK'D. ____ SCALE 3/4

MACHINE SHOP TOLERANCES UNLESS SPECIFIED OTHERWISE

± .015 DECIMAL DIMENSION
± 1/2° ANGULAR DIMENSION
✓ MACHINE FINISH 80 MICROINCH

OTHER FINISH XX MICROINCH OR LESS
BREAK SHARP EDGES .015" RAD. OR CHAM.
C'SINK THD. TO NOM. DIA. WITH A +.03 TOL.

Carl Strutz & Co., Inc.
Mars, PA
S001-BM-0578A