Item Number	Part Number	Quantity	Description	Cubify Filename
1	3D0002b	1	Delta motor assembly - Pulley, 150 teeth	3D0002b - Delta motor assembly - Pulley (150T)
2	3D0003a	2	Delta motor assembly - Delta arm 90mm	3D0003a - Delta motor assembly - Delta arm 90mm
3	3D0003b	2	Delta motor assembly - Delta arm 90mm nut	3D0003b - Delta motor assembly - Delta arm 90mm nut
4	3D0007	1	Delta motor assembly - Limit switch interruptor	3D0007 - Delta motor assembly - Limit switch interruptor
5	DB608	2	Bearing, 608	DB608
6	DBS-0.375-10L-HEX	2	Ball stud, 3/ 8" dia, M3x10	DBS-0.375-10L-HEX
7	FFLT-M3-12L	1	Fastener, M3 flat-head machine screw, 12mm L	FFLT-M3-12L
8	FNUT-M3	12	Fastener, M3 nut	FNUT-M3
9	FPAN-M3-12L	1	Fastener, M3 pan-head machine screw, 12mm L	FPAN-M3-12L
10	FPAN-M3-20L	1	Fastener, M3 pan-head machine screw, 20mm L	FPAN-M3-20L
11	FPAN-M3-30L	4	Fastener, M3 pan-head machine screw, 30mm L	FPAN-M3-30L
12	FPAN-M3-50L	2	Fastener, M3 pan-head machine screw, 50mm L	FPAN-M3-50L
13	FWSH-M3	2	Fastener, M3 flat washer	FWSH-M3

REVISIONS				
ZONE	REV	DESCRIPTION	DATE	APPROVED

NOTE: QUANTITIES SHOWN ARE FOR ONE (1) PULLEY ASSEMBLY.
THREE (3) ARE NEEDED FOR THE MACHINE, ONE FOR EACH ARM.

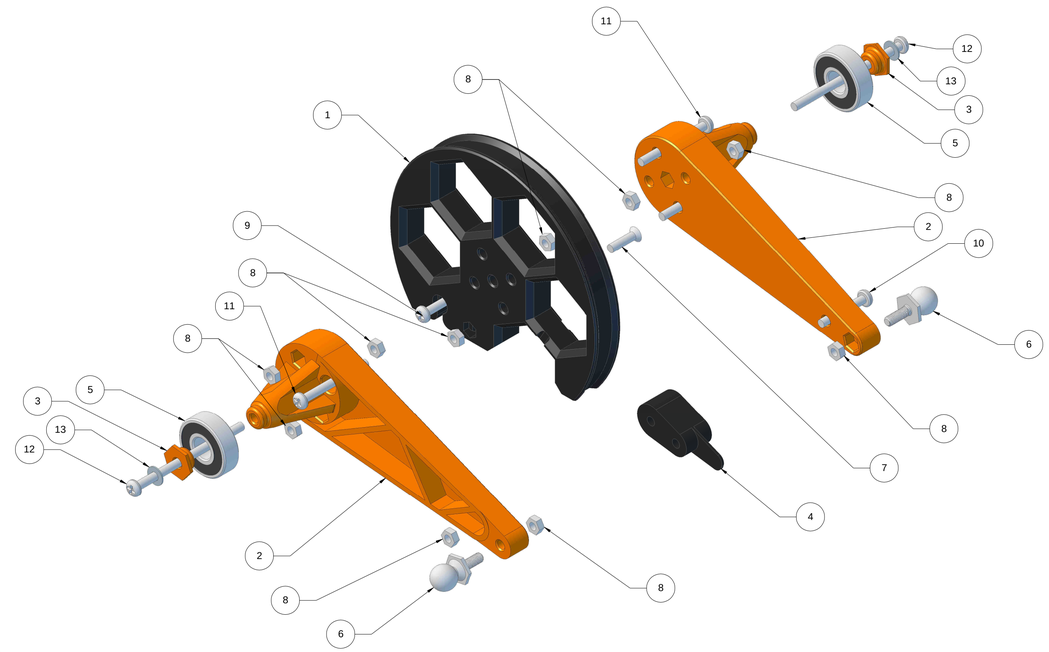

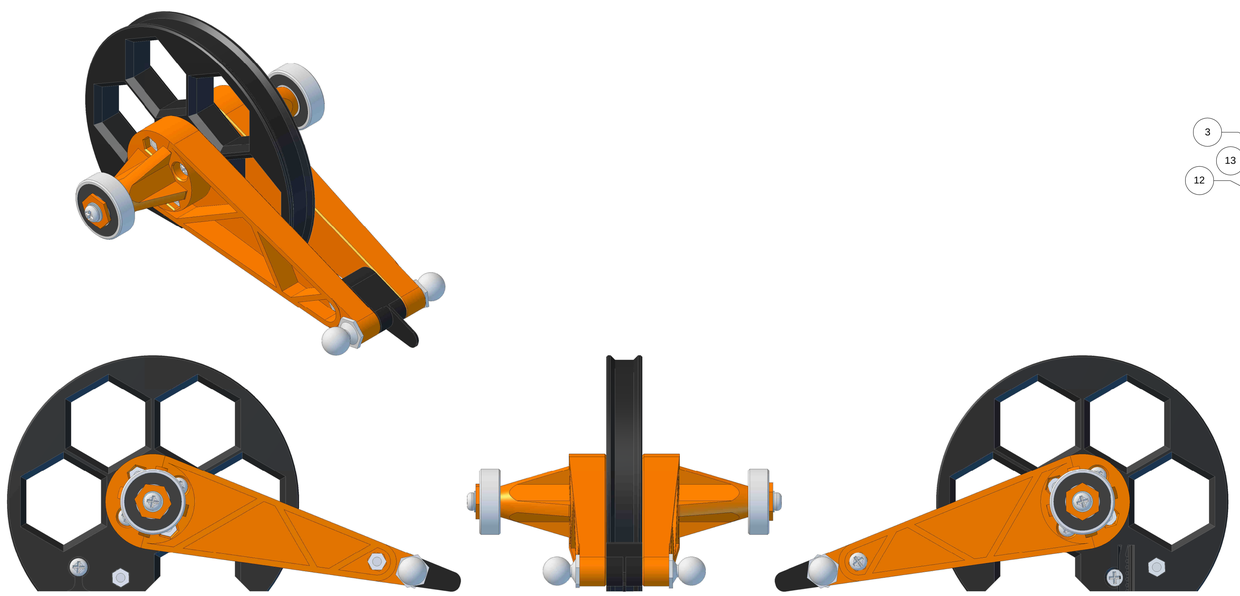

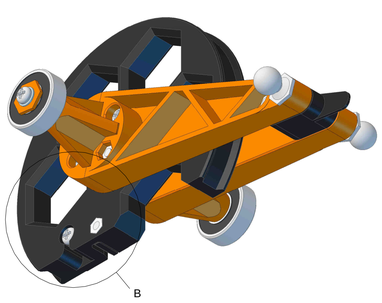

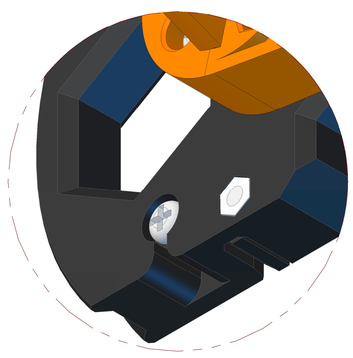

Detail B

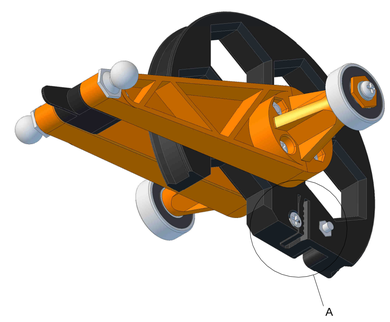

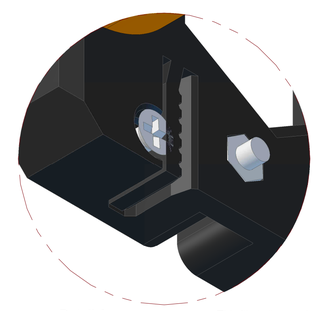

Detail A

This file is licensed under Creative Commons Attribution-ShareAlike (CC BY-SA) 4.0

open source hardware

DRAWN	DATE	AD0006 - Delta pulley and arm assembly
CHECKED		TIN WHISKERS TECHNOLOGY
QA		
MFG		
APPROVED		

THIRD ANGLE PROJECTION
ALL DIMENSIONS IN MM

SIZE	FSCM NO.	DWG NO.	REV
D			
SCALE 1:1		SHEET	

CC BY SA

FirePick™ Delta