Item Number	Part Number	Quantity	Description	Cubify filename
1	3D0026b	1	Up-looking camera housing base (black PLA)	3D0026b - Up-looking camera housing base - ELP-USB100W03M
2	3D0030b	1	Up-looking camera housing diffuser (clear / natural PLA)	3D0030b - Up-looking camera housing diffuser - ELP-USB100W03M
3	EL-CAM-ELP-USB100W03M	1	Up-looking camera module.	EL-CAM-ELP-USB100W03M
4	ELED02	1	Up-looking camera ring light PCB	ELED02 - Up-looking camera ring light
5	FNUT-M2	4	Fastener, M2 nut	FNUT-M2
6	FNUT-M3	4	Fastener, M3 nut	FNUT-M3
7	FNUT-M5-HNKK5	2	Extrusion nut, M5	FNUT-M5-HNKK5
8	FPAN-M2-8L	4	Fastener, M2 pan-head machine screw, 8mm L	FPAN-M2-8L
9	FPAN-M3-8L	4	Fastener, M3 pan-head machine screw, 8mm L	FPAN-M3-8L
10	FPAN-M5-8L	2	Fastener, M5 pan-head machine screw, 8mm L	FPAN-M5-8L
11	MTAPE01	1	Black tape (optional)	MTAPE01 - Up-looking ring light block

REVISIONS				
ZONE	REV	DESCRIPTION	DATE	APPROVED

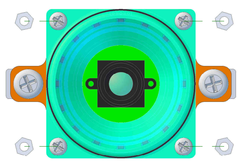

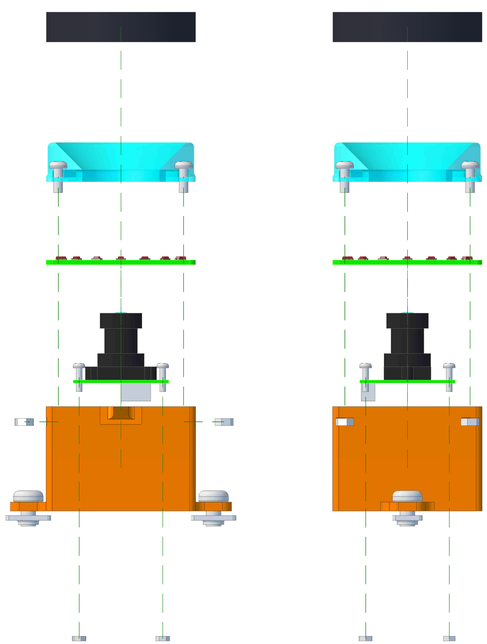

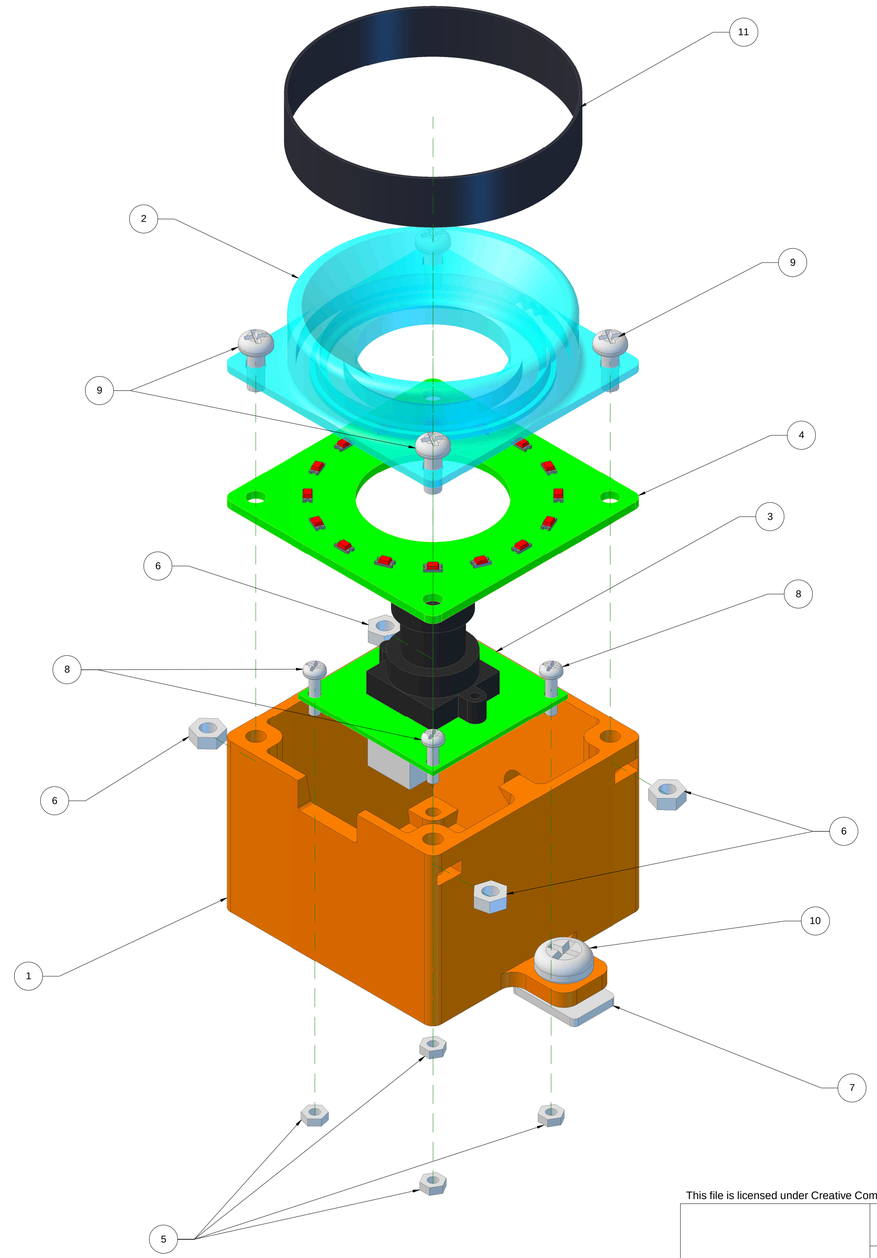

This file is licensed under Creative Commons Attribution-ShareAlike (CC BY-SA) 4.0

open source hardware

	DRAWN	DATE	AD0015b - Upward looking camera housing - ELP-USB100
	CHECKED		TIN WHISKERS TECHNOLOGY
	QA		
	MFG		
THIRD ANGLE PROJECTION ALL DIMENSIONS IN MM	APPROVED		SIZE D · FSCM NO. · DWG NO. · REV · SCALE 1:1 · SHEET

CC BY SA

FirePick™ Delta