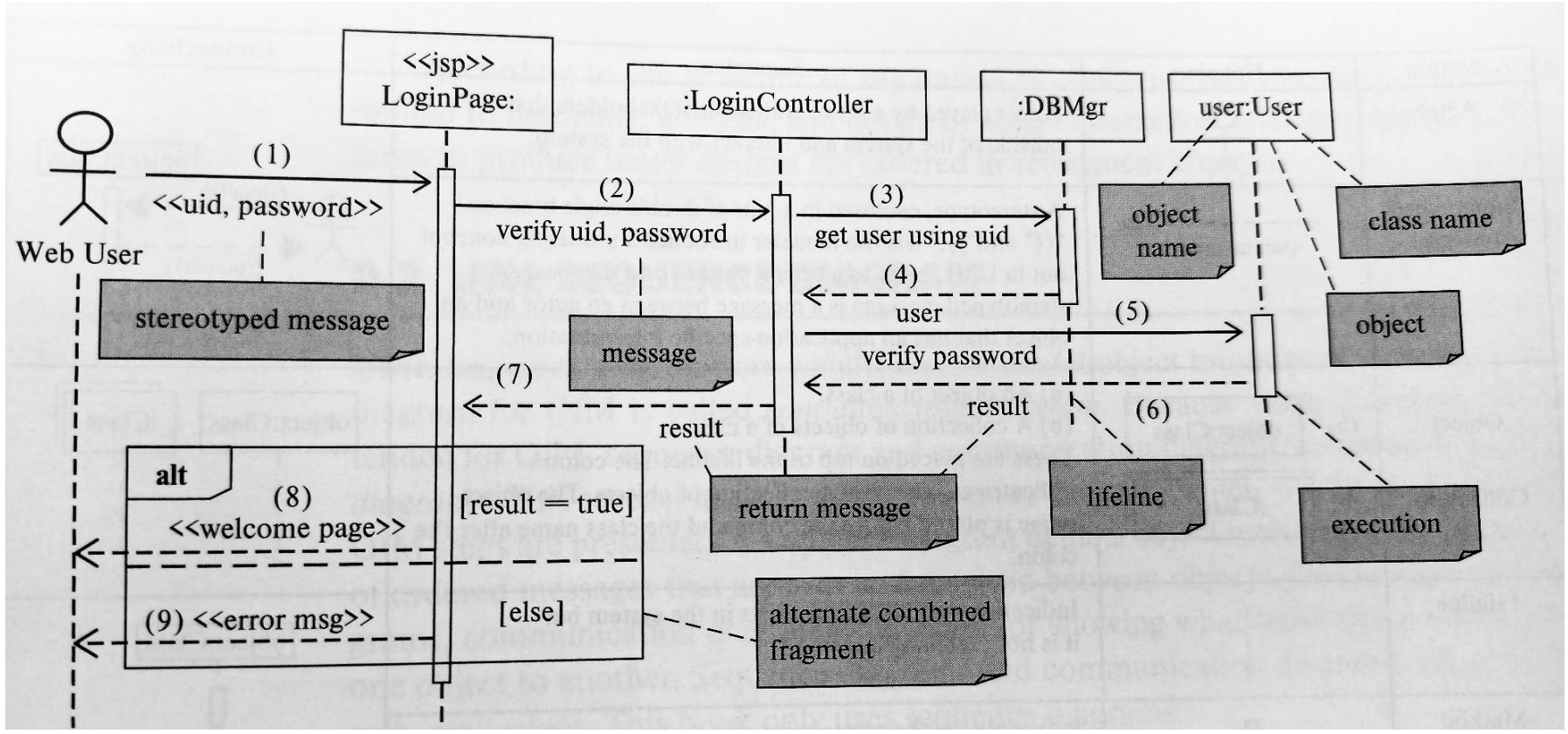
<<jsp>>
LoginPage:
:LoginController
:DBMgr
user:User
Web User
(1)
<<uid, password>>
(2)
verify uid, password
(3)
get user using uid
(4)
user
(5)
verify password
(6)
result
(7)
result
alt
(8)
<<welcome page>>
[result = true]
(9) <<error msg>>
[else]
stereotyped message
message
return message
lifeline
execution
object name
class name
object
alternate combined fragment

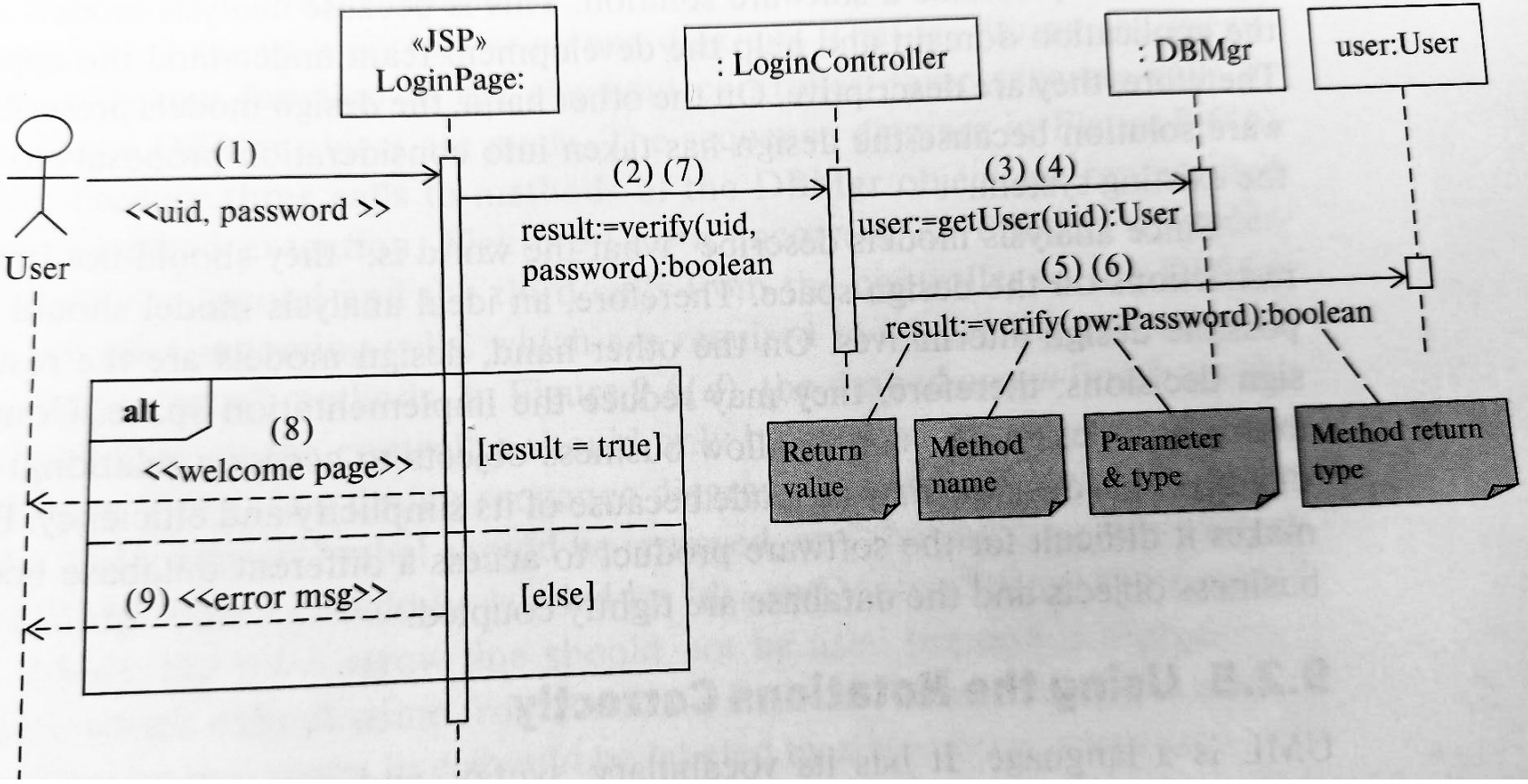
«JSP»
LoginPage:
: LoginController
: DBMgr
user:User
User
(1)
<<uid, password >>
(2) (7)
result:=verify(uid,
password):boolean
(3) (4)
user:=getUser(uid):User
(5) (6)
result:=verify(pw:Password):boolean
alt
(8)
<<welcome page>>
[result = true]
(9) <<error msg>>
[else]
Return value
Method name
Parameter & type
Method return type

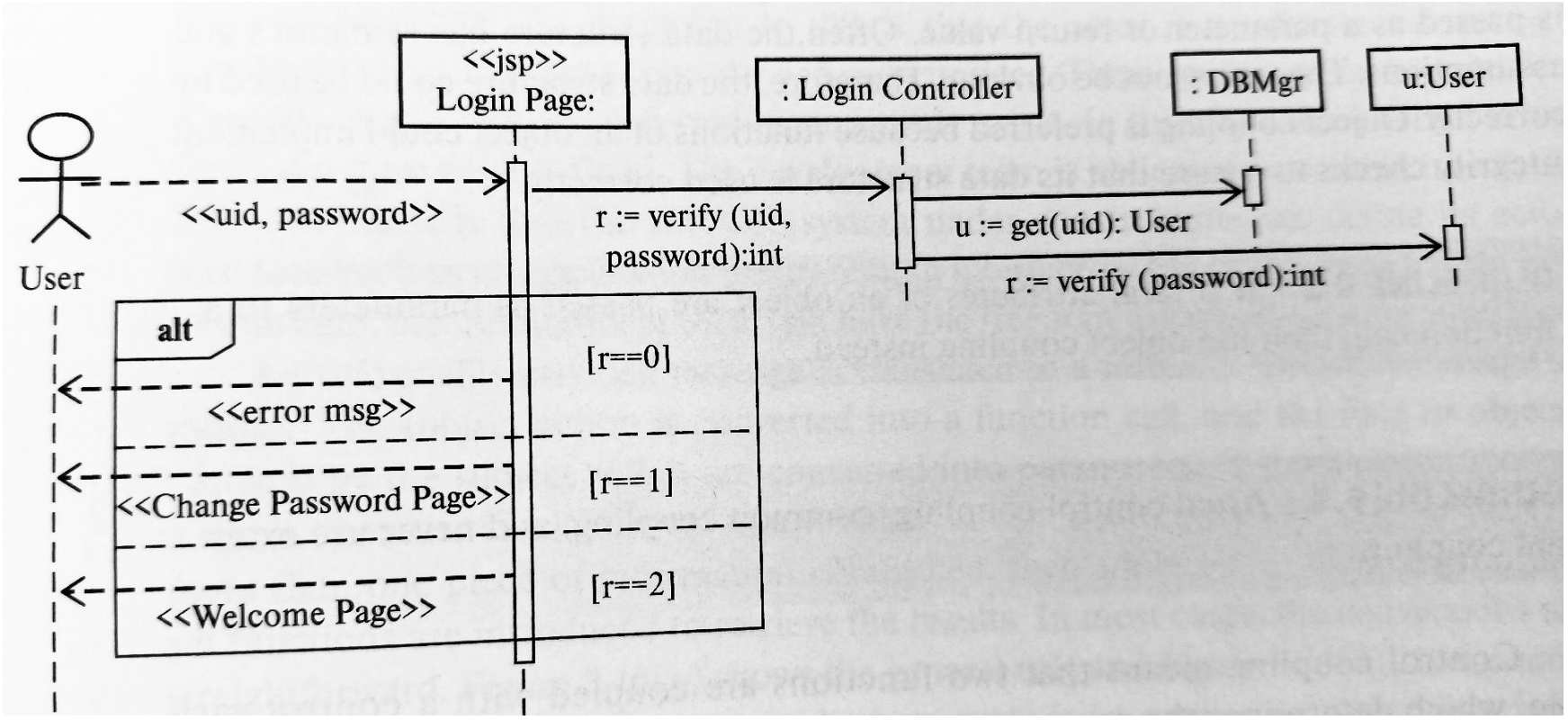
<<jsp>>
Login Page:
: Login Controller
: DBMgr
u:User
User
<<uid, password>>
r := verify (uid, password):int
u := get(uid): User
r := verify (password):int
alt
[r==0]
<<error msg>>
[r==1]
<<Change Password Page>>
[r==2]
<<Welcome Page>>

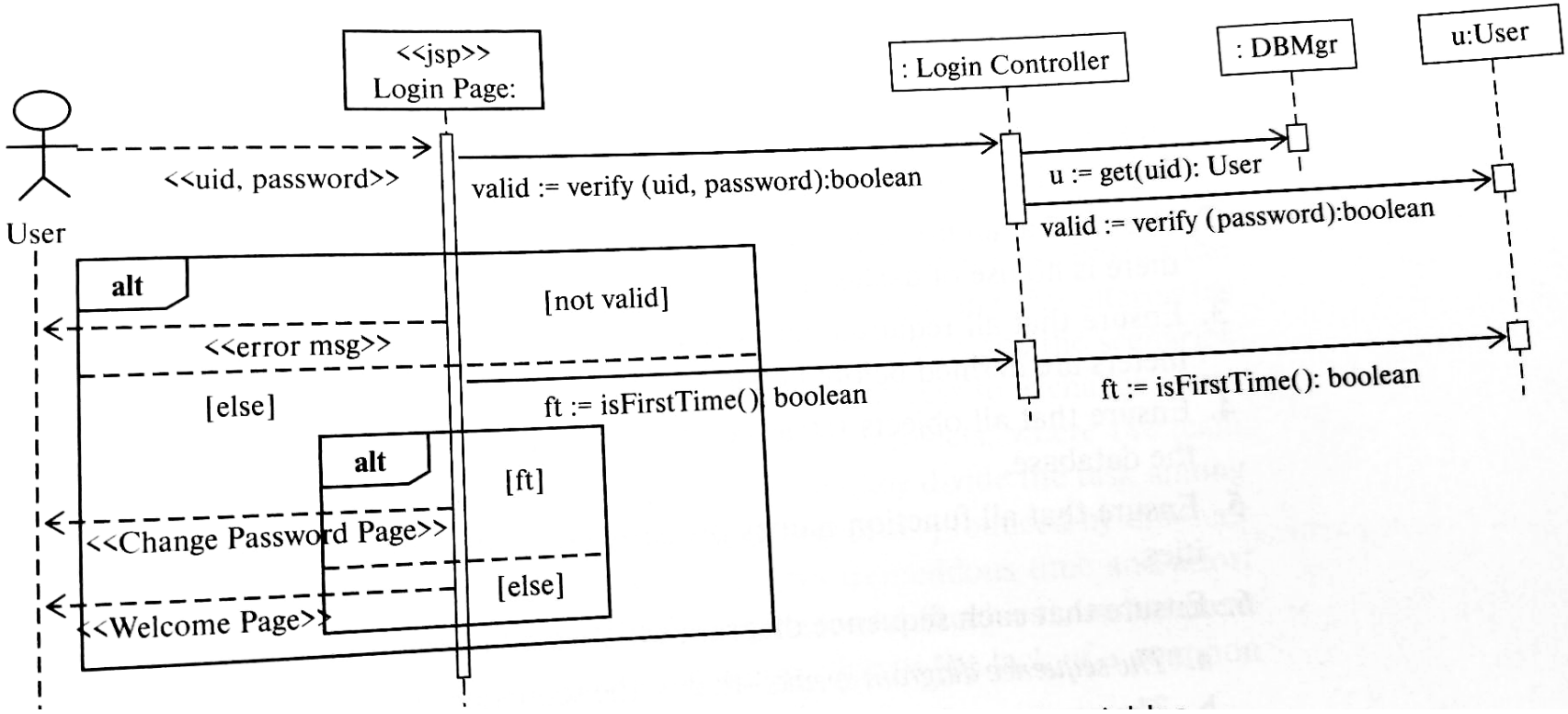
User
<<jsp>>
Login Page:
: Login Controller
: DBMgr
u:User
<<uid, password>>
valid := verify (uid, password):boolean
u := get(uid): User
valid := verify (password):boolean
alt
[not valid]
<<error msg>>
[else]
ft := isFirstTime(): boolean
ft := isFirstTime(): boolean
alt
[ft]
<<Change Password Page>>
[else]
<<Welcome Page>>