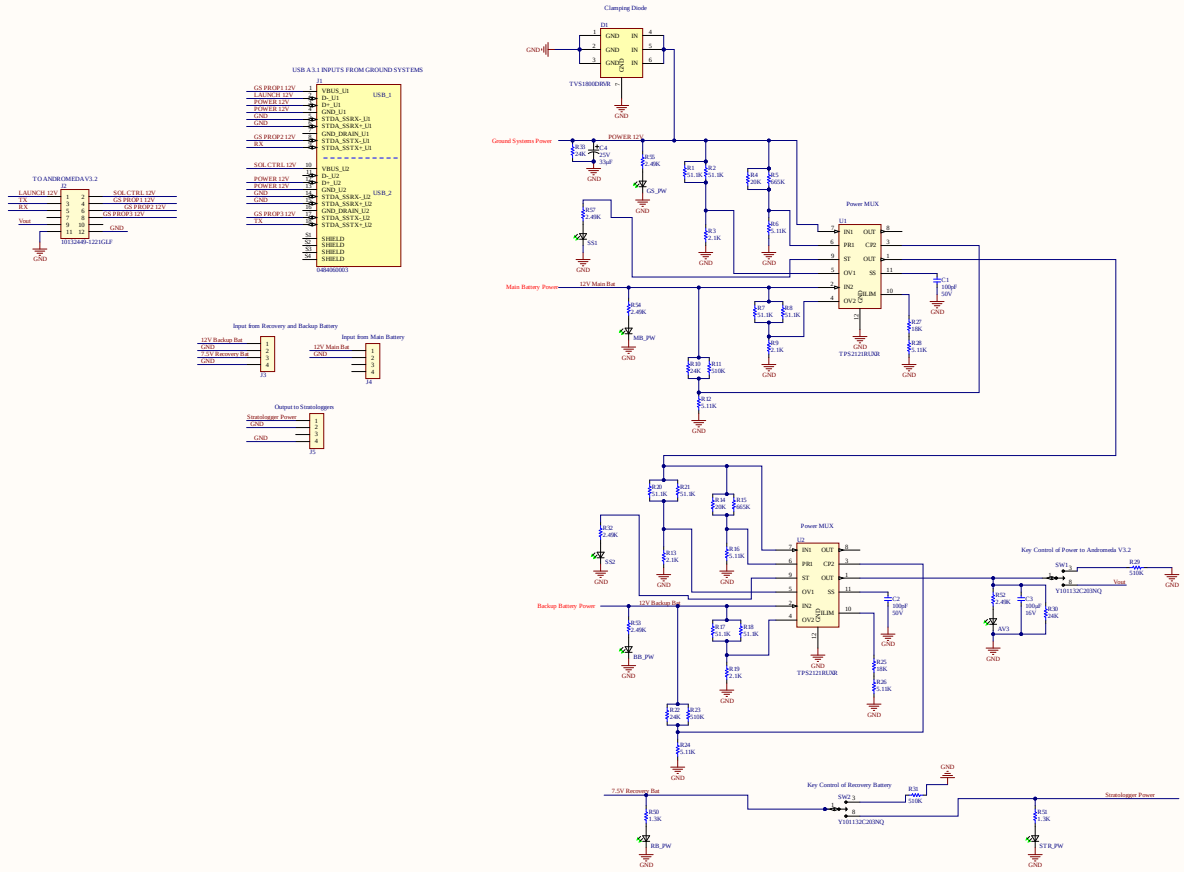

Title			
Size	Number		Revision
A1			
Date:	7-17-2021	Sheet of	
File	C:\Users\...\Source_Solaris\Sch2.Sch	Drawn By:	