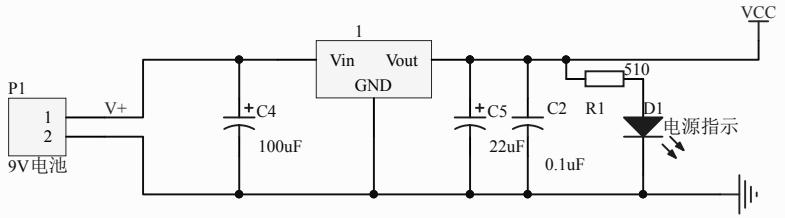
VCC
1
Vin
Vout
GND
P1
1
2
9V电池
V+
C4
100uF
C5
22uF
C2
0.1uF
R1
510
D1
电源指示

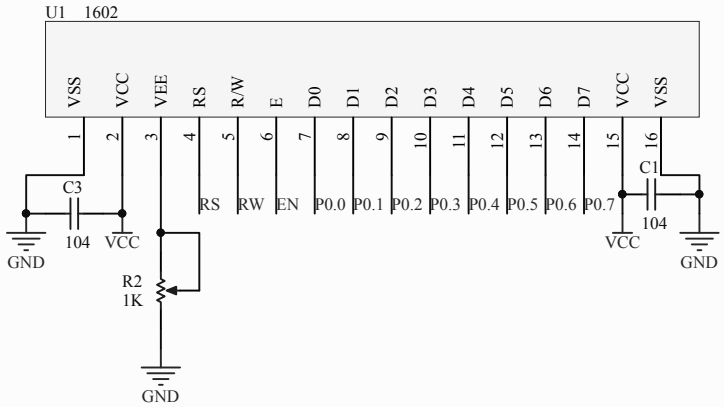
U1 1602
VSS
VCC
VEE
RS
R/W
E
D0
D1
D2
D3
D4
D5
D6
D7
VCC
VSS
RS
RW
EN
P0.0
P0.1
P0.2
P0.3
P0.4
P0.5
P0.6
P0.7
C3
104
C1
104
R2
1K
GND

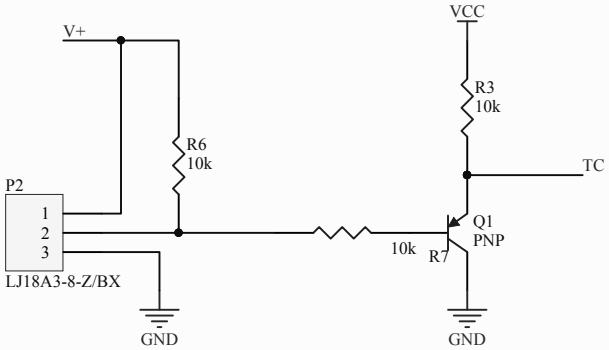
V+
VCC
R3
10k
R6
10k
TC
P2
1
2
3
LJ18A3-8-Z/BX
10k
R7
Q1
PNP
GND

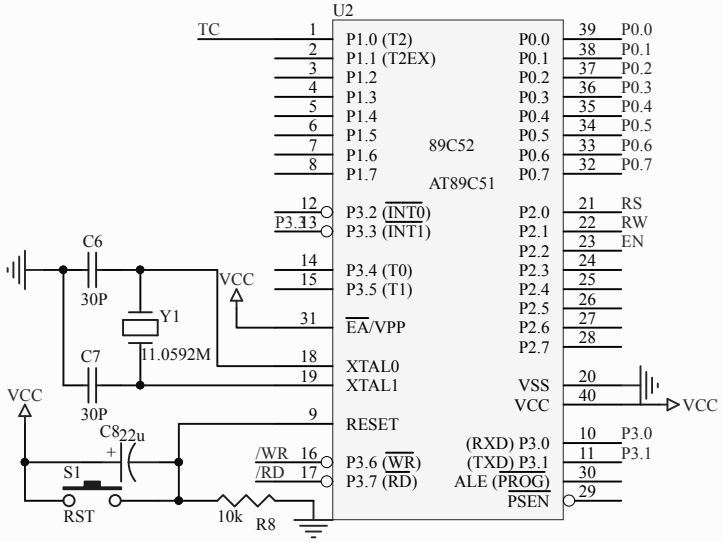
U2
TC
P1.0 (T2)
P1.1 (T2EX)
P1.2
P1.3
P1.4
P1.5
P1.6
P1.7
P3.2 (INT0)
P3.3 (INT1)
P3.4 (T0)
P3.5 (T1)
EA/VPP
XTAL0
XTAL1
RESET
P3.6 (WR)
P3.7 (RD)
89C52
AT89C51
P0.0
P0.1
P0.2
P0.3
P0.4
P0.5
P0.6
P0.7
P2.0
P2.1
P2.2
P2.3
P2.4
P2.5
P2.6
P2.7
VSS
VCC
(RXD) P3.0
(TXD) P3.1
ALE (PROG)
PSEN
RS
RW
EN
C6
30P
C7
30P
Y1
11.0592M
VCC
C8
22u
S1
RST
/WR
/RD
10k
R8

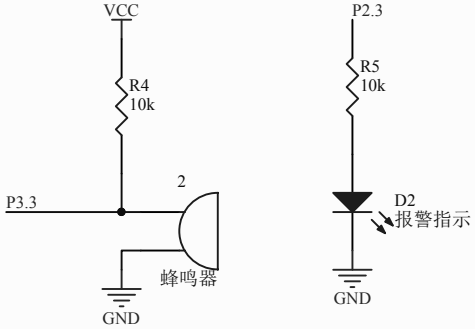
VCC
R4
10k
P3.3
蜂鸣器
GND
P2.3
R5
10k
D2
报警指示
GND