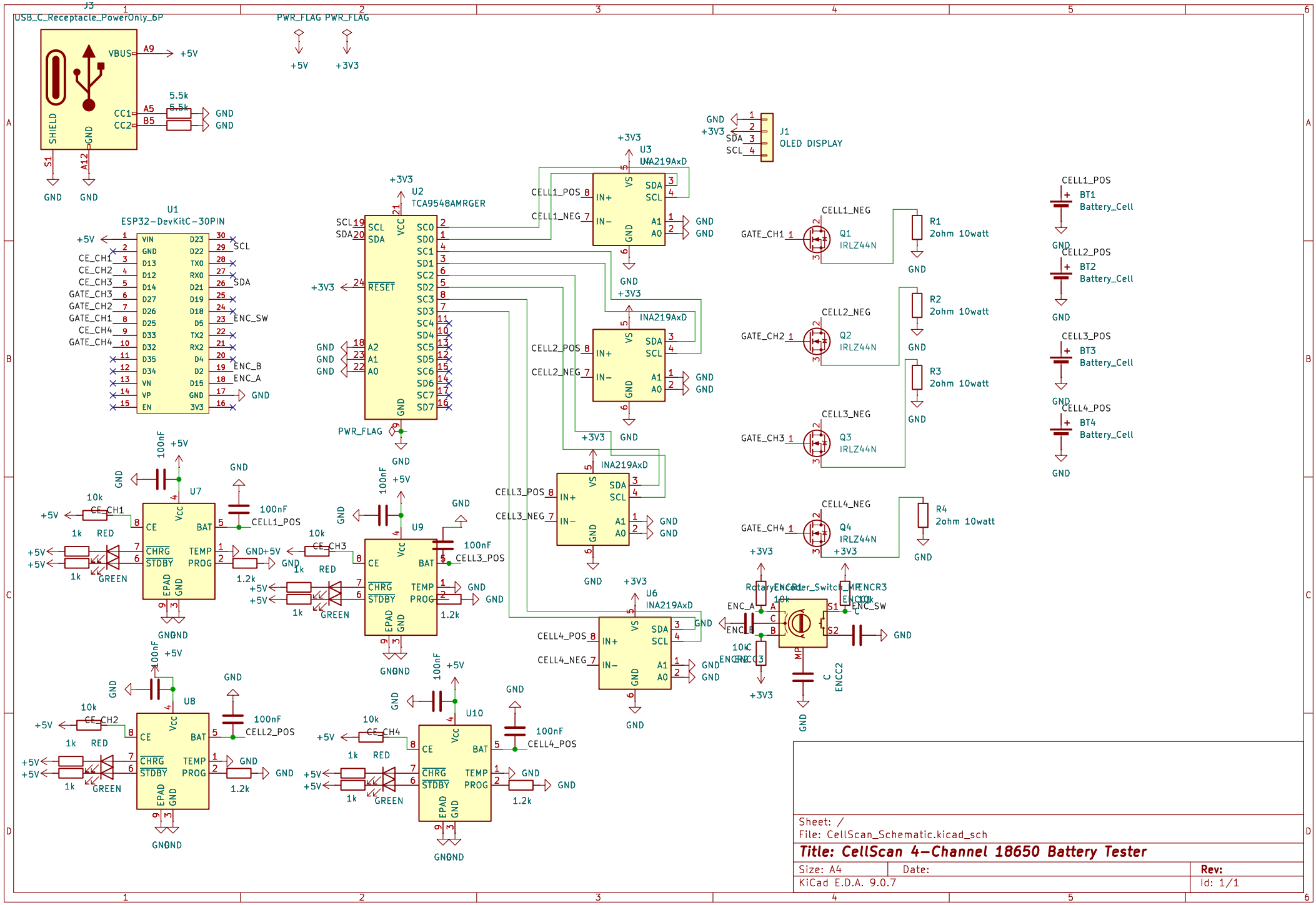

Sheet: /
File: CellScan_Schematic.kicad_sch

Title: CellScan 4-Channel 18650 Battery Tester

Size: A4	Date:	Rev:
KiCad E.D.A. 9.0.7		Id: 1/1