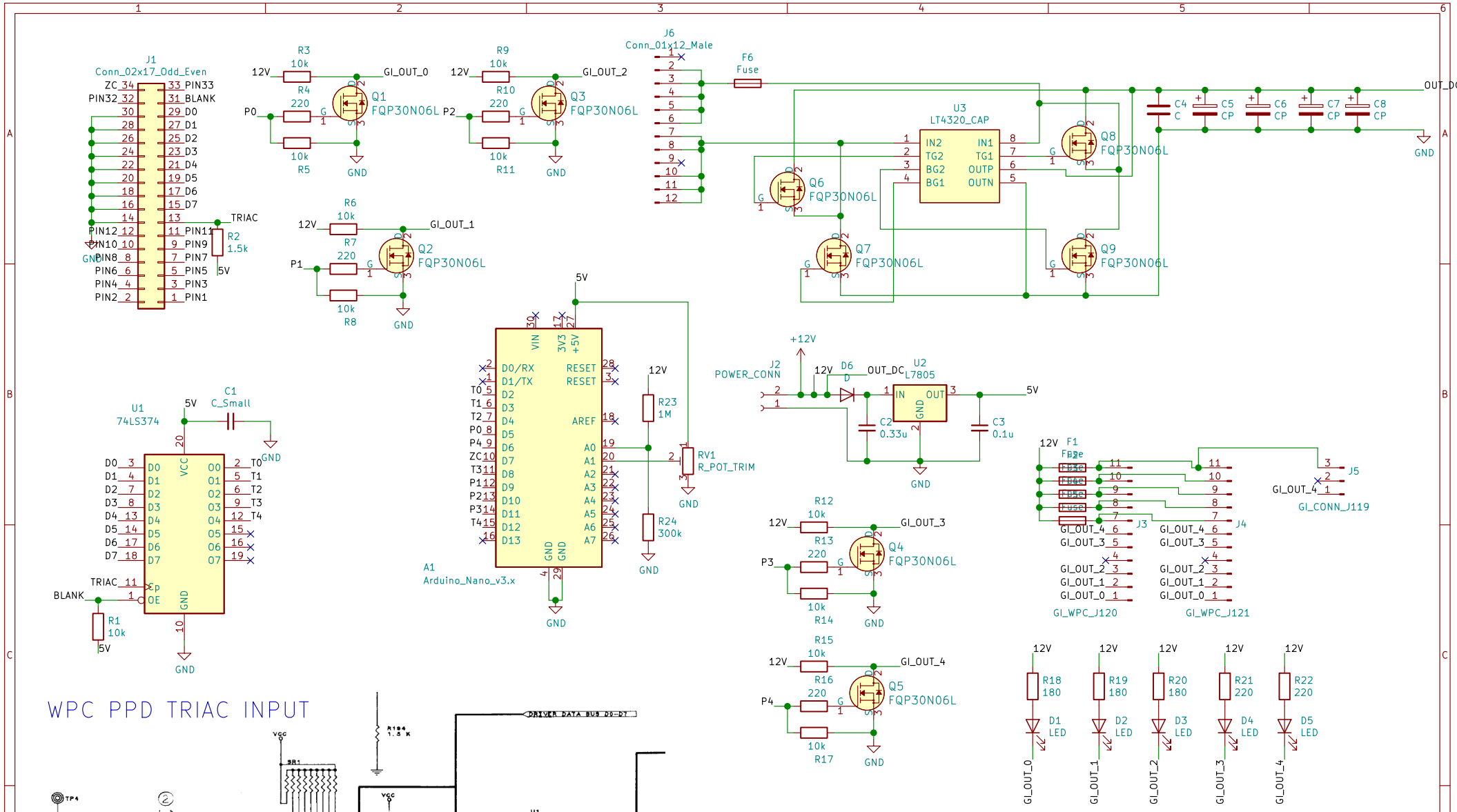

morbid cornflakes

Sheet: /

File: afterglow_gi_nano_ps.sch

Title: Afterglow GI

Size: A4	Date:	**Rev: 1.1**
KiCad E.D.A. kicad 5.1.5		Id: 1/1