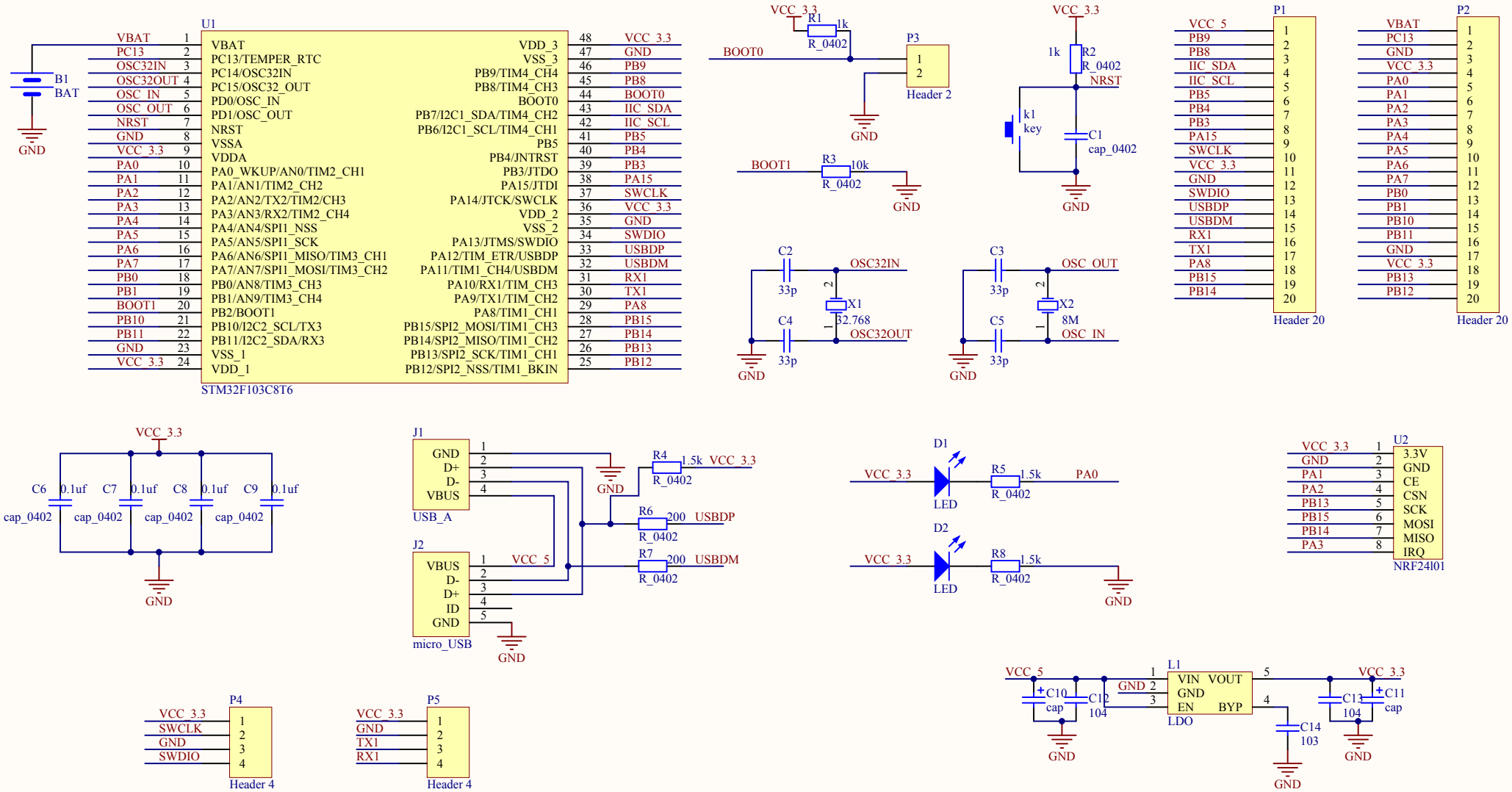

Title		
Size A4	Number	Revision
Date: 2014-9-6		Sheet of
File: E:\QYPCB\..\Sheet1.SchDoc		Drawn By:

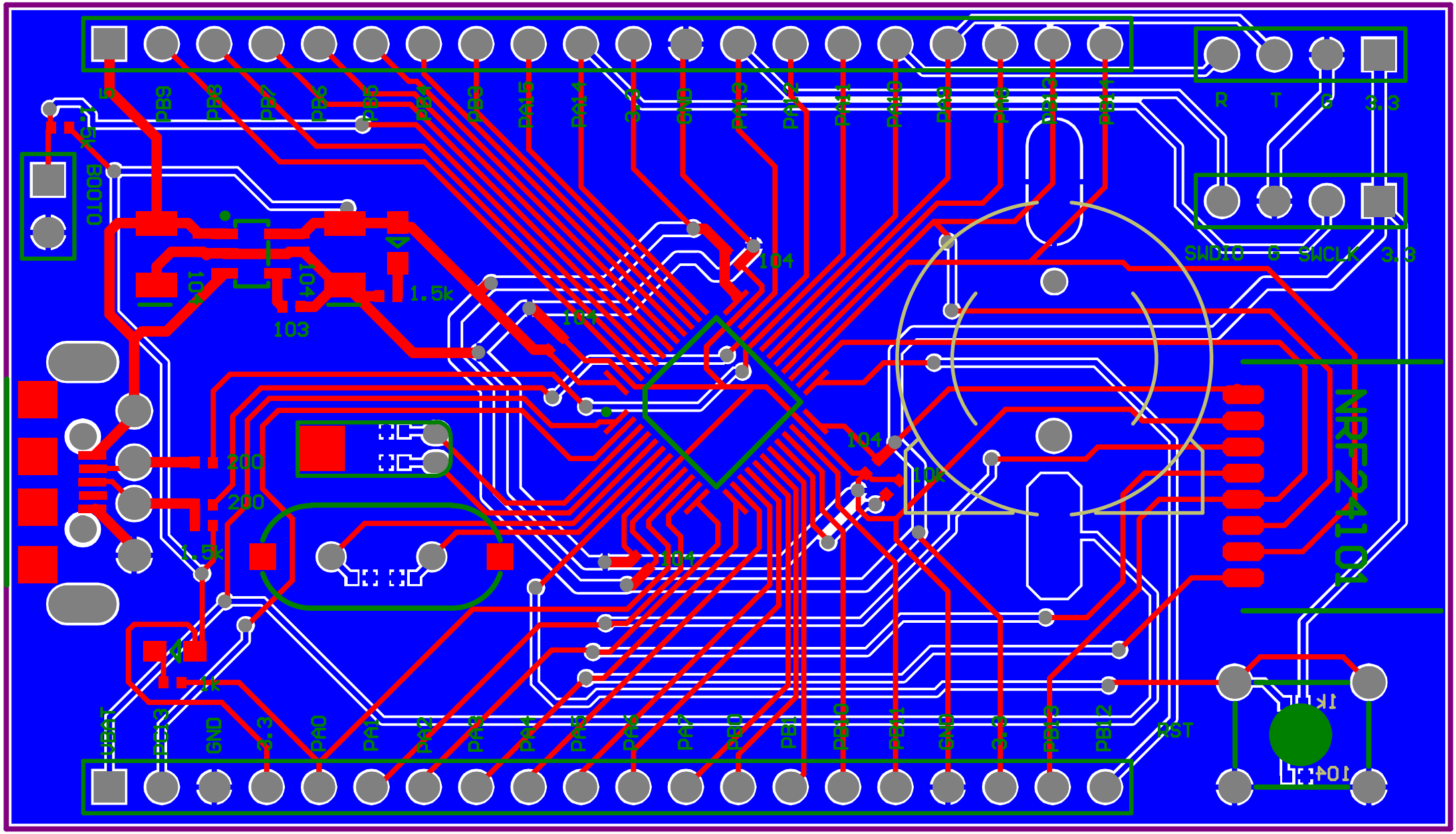
BOOT0
3.3V
PB9
PB8
PB7
PB6
PB5
PB4
PB3
PA15
PA14
3.3
GND
PA13
PA12
PA11
PA10
PA9
PA8
PB15
PB14
R
T
G
3.3
SWDIO
G
SWCLK
3.3
NRF24L01
1.5k
104
103
200
200
1.5k
4k
10k
1k
RST
VBAT
PC13
GND
3.3
PA0
PA1
PA2
PA3
PA4
PA5
PA6
PA7
PB0
PB1
PB10
PB11
GND
3.3
PB13
PB12