MARK	REVISION RECORD 變更內容	DATE 日期	DRAWN 修改
1	According to Engineeing change No.NA211102 Modify	2021-12-21	Denny

1.COLD TREATEDWATER INTAKE OF SUPPLIED AT TEMPERATURE OF 25°C,CONSUMPTION PER 8~10L/CYC, HARDNESS OF WATER ≦ 0.2°fH(0.02mmol/L),pH 5~7AND WITH CONDUCTIVITY ≦15 μS/cm.

NOTE:
EACH TIME THE STEAM GENERATOR IS EMPTIED FOR CLEANING OR MAINTENANCE, A FURTHER 15 LITER OF WATER ARE NEEDED TO FILL IT UP AGAIN.

2. DRAINAGE PIPE Φ≧1" METALLIC PIPE, CORROSION RESISTANCE 2"G. AND A TEMPERATURE OF 100°C ABOVE.

3.ELECTRIC INTAKE,9kW,WIRE 4 m LONG. (GENERAL POWER SUPPLY TO THE STERILIZER)

	230VAC	380VAC	415VAC	440VAC
1φ 3W	41.7A	—	—	—
3φ 4W	24.1A	14.57A	13.37A	12.67A

NOTE:POWER INPUT MUST BE INSTALLED ACCORDING TO LOCAL APPLICABLE NORMS. 1

NOTE: ONCE THERE EXISTS REVERSING OF FAN BLADES THAT WILL CAUSED NO VACUUM VALUE,
TURN OFF THE MAIN POWER AND THEN SWITCH ANY TWO LINES OF THE THREE-PHASES EXCEPT GROUND LINE.
YOU MAY HAVE TO REPEAT THIS SWITCHING STEPS FOR TWO TIMES TO MATCH WITH THE CORRECT ROTATING DIRECTION AS SHOWN ON THE PUMP.

4.CEILING MOUNTED AIR EXTRACTION WITH GRILLE DRAW 300 Kcal/h (LOADING / UNLOADING AREA).

5.DRAINAGE PIPE AND EXHAUST CONNECTING PIPE MUST KEEP THE STRAIGHT, SHALL NOTBE BENT.

B.THE EQUIPMENT SHALL BE ADJUST TO A ANGLE OF 1°-2° WITH REAR SITE HIGHER THAN FRONT SITE FOR THE PROPER OPERATION OF DRY AND DRAINAGE.

IMPORTANT : ENVIRONMENT CONDITIONS IN THE STERILE AREA:
- THE STERILE AREA TEMPERATURE MUST BE ≦ 40°C ;HUMIDITY ≦ 85%RH
- TO KEEP THESE CONDITIONS IN THE STERILE AREA AND DEPENDING ON THE Kcal. LOST BY THE EQUIPMENT INDICATED IN THE ITEMS 4 , WE SUGGEST THAT THE EXTRACTOR AND THE DIAMETER OF THE EXTRACTION TUBE ARE CALCULATED AND MADE BY A SPECIALIZED COMPANY.

ATTENTION:
- THE ELECTRIC WIRES TO THE STERILIZER SHOULD BE DRIVEN BY AN HERMETIC CONDUIT.
- THE INDICATED AIR EXTRACTION IS ONLY TO DISSIPATE THE HEAT OF THE MACHINE AND MUST BE INDEPENDENT OF THE CLIMATE CONTROL SYSTEM OF THE ZONE.
- CHAMBER DIMENSIONS: Φ500x1000 mm
- DEVICE OUTSIDE DIMENSIONS: W670mmxH1600mmxD1300mm
- ALL THE OUTLETS POWER INPUT MUST BE INSTALLED ACCORDING TO LOCAL APPLICABLE NORMS.
- IF THERE IS NO FALSE CEILING, THE AIR EXTRACTION, MUST BE INSTALLED IN THE WALL, AND HAVE THE SAME CAPACITY AS THOSE OF THE FALSE CEILING, SO THE AIR CAN BE CARRIED OUTSIDE OF THE BUILDING. IT ALSO NEEDS TO BE EQUIPPED WITH A GRILLE.
- THE INSTALLATION UP TO THE MACHINE AS WELL AS THE SUPPLY OF ACCESSIBLE KEY ACCORDING TO THE SPECIFICATIONS INDICATED IN THE DRAWING, ARE CHARGEABLE TO THE PURCHASERS.
- IF THERE IS ANY KIND OF PROBLEM DURING INSTALLATION FOR THE VARIOUS INTAKES NOT INDICATED IN THE DRAWING, PLEASE CONTACT OUR TECHNICAL SERVICE DEPT. FOR FURTHER ASSISTANCE.
- THE MEASUREMENTS OF THIS DRAWING ARE CONSIDERING FINISHED WALLS.
- THE SPACES OF MAINTENANCE MUST BE SUFFICIENTLY ILLUMINATED.

新駿實業股份有限公司 文管中心 JAN.26.2022 發行

Note : All parts should comply with RoHS.

⚠ WARNING

THIS DRAWING GIVES THE BASIC INSTRUCTIONS FOR PROVIDING THE SUPPLY SERVICES AND ENVIRONMENT THAT GUARANTEES THE PROPER FUNCTIONNING OF THE PRODUCTS FROM THIS COMPANY. THE PURCHASER, AND THE PURCHARSER'S INSTALLERS SHALL PROVIDE THE SUPPLY LINES NECESSARY FOR EACH PRODUCT IN ACCORDANCE WITH ESTABLISHED APPLICABLE NORMS AND REGULATIONS. THE COMPANY DECLINES ALL RESPONSABILITY FOR FAILURE TO COMPLY WITH SUCH LAWS AND REGULATIONS.

⚠ NOTE

THIS COMPANY RESERVES THE RIGHT TO MODIFY THIS DRAWING ACCORDING TO THE TECHNICAL DEVELOPMENT OF THE EQUIPMENT.

A. AIR INTAKE FREE OF IMPURITIES Φ1/4" FILTERED AND REGULATED AT A PRESSURE OF 6-7 bar, FLOW OF 0.0083 Nm^3/min, APROX. CYCLE CONSUMPTION 0.005 Nm^3/min, PLACED THE WALL WITH BUILT-IN AND ACCESSIBLE KEY.
NOTE:
THIS INTAKE WILL BE PROVIDED ONLY IF THE CUSTOMER HAS AIR NETWORK.

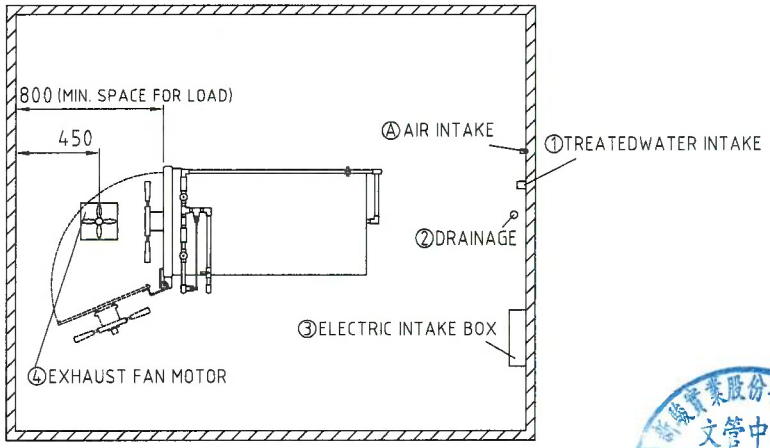

TOP VIEW

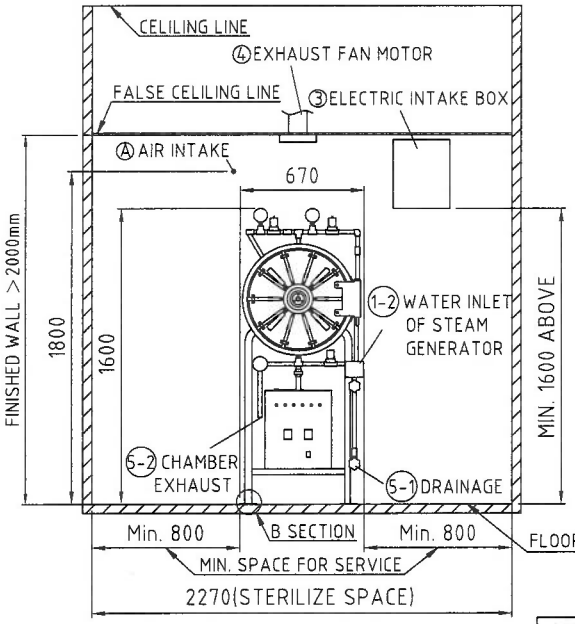

FRONT VIEW

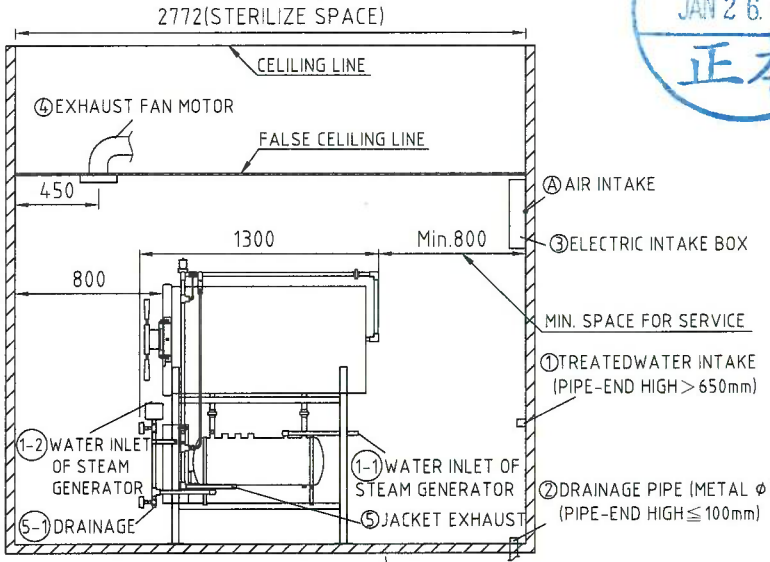

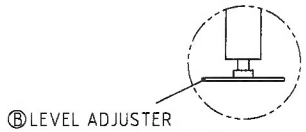

B SECTION(1:5)

FRONT — BACK

1°-2°

RIGHT VIEW

THE EQUIPMENT SHALL BE ADJUST TO A ANGLE OF 1°-2°WITH REAR SITE HIGHER THAN FRONT SITE FOR THE PROPER OPERATION OF DRY AND DRAINAGE.

新駿實業股份有限公司 文管中心 JAN 26 2022 正本

STURDY 新駿實業股份有限公司 STURDY INDUSTRIAL CO., LTD.

TOLERANCE 未標註者一般公差表		未標示之圓角為R1導角為C1		DESIGNED 設計: Joe	DRAWN 繪圖: Denny	VERIFIED 校核:	APPROVED 核准:
0~10 ±0.2	51~100±0.6	201~500±1	ANGLE ±1°				
11~50 ±0.4	101~200±0.8	501~X ±2	VIEWPOINT 視角	20180918	20211221	20220117	20220117
MATERIAL 材質		SCALE 比例 1:41	UNIT 單位 mm	NAME 圖名 SA-500ABW INSTALLATION PLAN			
SURFACE FINISHING 表面處理		MODEL NO. 代表機種 SA-500ABW		DWG.NO. 圖號 SA-500ABW-HE-001-02			

R3-058-06