Manualslib.com - The Global Manuals Library

TRANSNORM TS 1200 OPERATING INSTRUCTIONS MANUAL

Quick Links

Technical Description

Table of Contents

Table of Contents
Applicable documents
EC Declaration of Incorporation
Introduction
Purpose of the document
Validity
Illustrations
Using the instructions
Safety instructions
Copyright Protection
Service
Warranty
Safety
Intended use
Non-permitted operating conditions
Responsibilities of the operating company/integrator
Personnel qualification
Remaining risks regarding the machine
Remaining risks for operating personnel
Remaining risks for technical personnel
Protective devices
Protective devices on the machine
Description
Technical description
Main dimensions
Technical data

Required performance level (PLr)
Areas of the machine
Parts of the machine
Conveyor configuration
Optional machine equipment
Transport and installation
Delivery of the machine
Unpacking the machine
Long-term machine storage
Disposing of packaging material
Setting up the machine
Ground requirements
Permitted operating conditions
Internal transportation
Auxiliary equipment
Transport with industrial truck or crane
Final installation on-site
Assembly
Installation
Mounting the side guides
Electrical connection
Operation
Commissioning
Commissioning and start-up after service and maintenance work
Normal operation
Shutdown
Maintenance and care
Maintenance work
Motor maintenance

Gear unit maintenance
Lubricants
Maintenance schedule
Cleaning and care
Maintenance and repair
Spare part purchasing
Tools, equipment and supplies
Tightening torques
Guards
Disassembling/assembling the bottom cover
Replacing the side guide
Sheet-metal side guide
Tubular side guide
C-profile side guide
Replacing the conveyor belt
Tensioning/adjusting the conveyor belt
Terminal drive
Tensioning station (conveyor bed)
Tail pulley
Replacing the gear motor
Replacing the flange bearings
Replacing the pulley
Tail pulley Ø 42
Tail pulley Ø 65
Tail pulley/transfer drive Ø 80
Replacing the drive pulley
Replacing a roller - apex bend
Replacing rollers - roller arch
Repairing the pre-conveyor/conveyor gate

Troubleshooting
What to do if
Motor and gear
Decommissioning and waste disposal
Machine disposal
Main components of the machine
Contact details
Head office
Subsidiaries, branch offices and sales partners worldwide
Service branches - Germany
Suggestions and information
Other ManualsLib Projects

transnorm
your best move

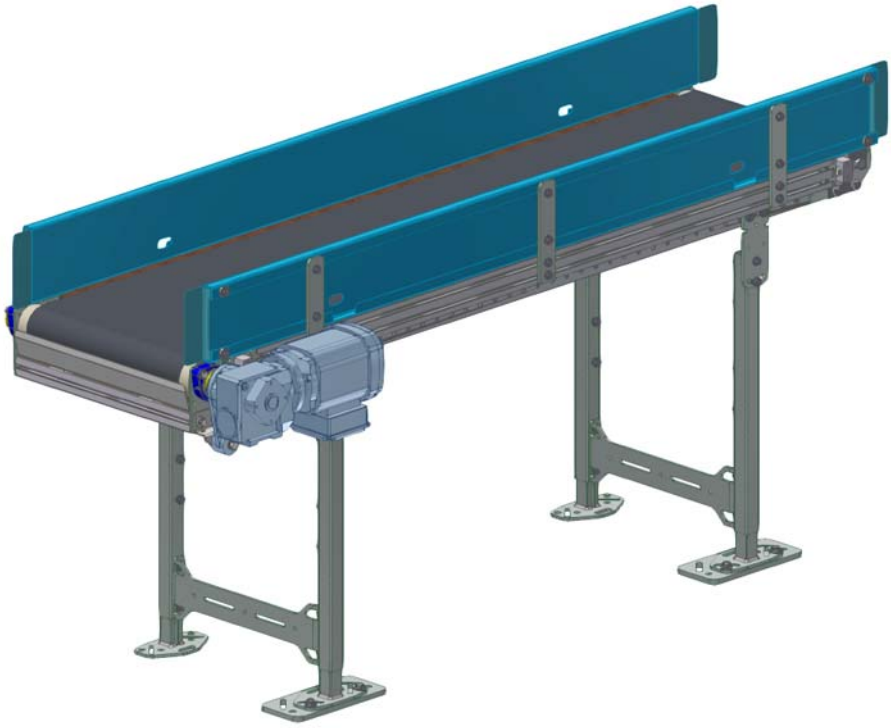

TS 1200
Belt conveyor

Operating instructions

Product	Belt conveyor TS 1200
Manufacturer	TRANSNORM SYSTEM GmbH Förster Str. 2 D-31177 Harsum Tel. +49 (0) 5127 4020 Fax +49 (0) 5127 4400 info@transnorm.de http://www.transnorm.com
Documentation	Operating instructions - Translation - Version 5.7 ENG, 14.05.2018 Subject to modifications. All rights reserved by TRANSNORM SYSTEM GmbH. Reprint and duplications only with written approval.

Revision

V 5.0	Completely revised edition
V 5.1	Remaining risks and safety instructions revised
V 5.2	Introduction revised
V 5.3	Safety instructions added
V 5.4	Belt guidance added
V 5.5	Ø 80 Tail pulley version added
V 5.6	Disassembling/assembling bottom cover and performance level added
V 5.7	Maintenance schedule revised

Table of contents

Applicable documents 7
EC Declaration of Incorporation 7

Introduction 9
Purpose of the document 9
- Validity 9
- Illustrations 9

Using the instructions 10
Safety instructions 11
Copyright Protection 12
Service 12
Warranty 13

Safety 15
..... 15
- Intended use 15
- Non-permitted operating conditions 16
- Responsibilities of the operating company/integrator 16

Personnel qualification 19
Remaining risks regarding the machine 20
- Remaining risks for operating personnel 20
- Remaining risks for technical personnel 21

Protective devices 25
Protective devices on the machine 26

Description 27
Technical description 28
Main dimensions 29
Technical data 31
Required performance level (PLr) 33
Areas of the machine 34
Parts of the machine 35
Conveyor configuration 36
Optional machine equipment 38

Transport and installation 39
Delivery of the machine 39
- Unpacking the machine 39
- Long-term machine storage 39
- Disposing of packaging material 40

Setting up the machine 40
- Ground requirements 40
- Permitted operating conditions 40

Internal transportation 41
- Auxiliary equipment 42

Transport with industrial truck or crane 43
Final installation on-site 44
- Assembly 44
- Installation 45
- Mounting the side guides 48
- Electrical connection 49

Operation 51
Commissioning 51
Commissioning and start-up after service and maintenance work 51
Normal operation 53
Shutdown 54

Maintenance and care 55
Maintenance work 55
- Motor maintenance 55
- Gear unit maintenance 55

Lubricants 56
Maintenance schedule 56
Cleaning and care 58

Maintenance and repair 59
Spare part purchasing 59
Tools, equipment and supplies 59
Tightening torques 60
Guards 61
Disassembling/assembling the bottom cover 62
Replacing the side guide 63
- Sheet-metal side guide 63
- Tubular side guide 65
- C-profile side guide 66

Replacing the conveyor belt 67
Tensioning/adjusting the conveyor belt 70
- Terminal drive 70
- Tensioning station (conveyor bed) 72
- Tail pulley 73

Replacing the gear motor 75
Replacing the flange bearings 77
Replacing the pulley 79
- Tail pulley Ø 42 79
- Tail pulley Ø 65 80
- Tail pulley/transfer drive Ø 80 81

Replacing the drive pulley 82
Replacing a roller - apex bend 82
Replacing rollers - roller arch 85

Repairing the pre-conveyor/conveyor gate 87

Troubleshooting 91
What to do if... 91
Motor and gear 92

Decommissioning and waste disposal 93
Machine disposal 93
Main components of the machine 94

Contact details 95
Head office 95
Subsidiaries, branch offices and sales partners worldwide 96
Service branches - Germany 98
Suggestions and information 98

Applicable documents

EC Declaration of Incorporation

transnorm
your best move

-TRANSLATION-

EC-Declaration of Incorporation

as per EC Machinery Directive 2006/42/EG, Annex II B

Manufacturer: TRANSNORM SYSTEM GmbH
Förster Str. 2 • D-31177 Harsum

Herewith we declare, that the partly completed machinery described below

Machinery denomination: Belt Conveyor

TRANSNORM Machine model: TS 1200

is complying with the following requirements of the Machinery Directive 2006/42/EG:

1.1.1 – 1.1.3 / 1.1.5 / 1.3.1 – 1.3.4 / 1.3.6 – 1.3.8.1 / 1.3.9 / 1.4.1 / 1.4.2.1 / 1.5.1 – 1.5.6 / 1.5.8 / 1.5.9 / 1.6.1 – 1.6.4 / 1.7 [3.1.1 / 3.4.1]

Additional we declare that the relevant technical documentation is compiled in accordance with part B of Annex VII.

EC-Guidelines observed:

2006/42/EG „Machinery Directive"	Directive of the European Parliament and Council dated 17 May 2006 for the harmonisation of laws and administrative regulations of the Member States for machinery.
2014/30/EU „Directive relating to electro-magnetic compatibility (EMC)"	Council Directive dated 26 February 2014 on the harmonisation of laws of the Member States relating to electromagnetic compatibility.

The safety objectives of the Directive 2014/35/EU relating to electrical equipment are observed according to Annex I, no. 1.5.1 of the Machinery Directive 2006/42/EG.

The partly completed machinery must not be put into service until the final machinery into which it is to be incorporated has been declared in conformity with the provisions of Directive 2006/42/EC on Machinery, where appropriate, and until the EC Declaration of Conformity according to Annex II A is issued. In the event of a change to the partly completed machinery which has not been prearranged, this declaration will no longer be valid.

We commit to transmit, in response to a reasoned request by the market surveillance authorities, relevant documents on the partly completed machinery.

Harsum, 2016-10-11

Authorised for documentation:
Tillmann Eid
Förster Str. 2
D-31177 Harsum

ppa. K. Ventz

Dr. Kai Ventz
- Director of Technology and Innovation -

TRANSNORM SYSTEM GmbH
Förster Straße 2
D-31177 Harsum
info@transnorm.de
www.transnorm.com

Telefon +49 5127 402-0
Telefax +49 5127 44 00
UST-ID/VAT DE 162570077

Handelsregister
Hildesheim HRB 210
Gerichtsstand Hildesheim
Geschäftsführer
Sidy Diop, Georg Waldmüller

Commerzbank Hildesheim
BIC COBADEFFXXX
IBAN DE 2825 9400 3302 1768 5700

Deutsche Bank Hildesheim
BIC DEUTDE2H259
IBAN DE 2825 9700 7400 1230 0000

Introduction

Purpose of the document

These operating instructions enable you to safely operate the delivered machine, defined as partly completed machinery by the EC Machinery Directive, in accordance with its intended use.
Read through these instructions carefully before commissioning the machine. For further technical information, please refer to the order confirmation supplied separately.

You will find information on the following topics in the sections below:

- The safe handling of the machine
- Technical specifications
- Transporting, installing and putting the machine into operation
- Maintenance instructions
- Repairing the machine
- Fault detection and correction
- Taking the machine out of operation and disposal

Validity

These operating instructions apply to the operating company/integrator and all persons working on or with the machine.

Illustrations

The illustrations show simplified views of the machine.
We reserve the right to carry out technical alterations in case of further developments. If assembly is not described, it will be carried out in exactly the opposite order to disassembly.

Due to the numerous possible system configurations of our machines, details shown in the illustrations may differ from the machine supplied.
See the order confirmation for an exact description
of your specific machine.

Using the instructions

Different circumstances are indicated using specific text/formulations. Important information has also been marked with additional symbols. The following is an overview of the different ways information is formulated.

➔ This is a single, complete step.

1. This is the first step in a series of actions.

↳ This is a useful remark on a specific step.

? *This is a problem that may arise.*
This is the cause of the problem.
➔ This is a measure to solve the problem.

✓ You have completed a series of actions.

✓ You have completed the entire activity.

This is a notice.
Notices provide additional information.

Safety instructions

Safety instructions warn of risks and remaining risks and offer information on how to prevent them.

The signal words CAUTION, WARNING and DANGER indicate the level of severity of the risk.
The following overview explains the safety instructions used in this document.

DANGER

This notice warns of risk of death or fatal injury
This states the cause of the danger.
➔ You must take this action to avert the danger.

WARNING

This notice warns of moderate or minor injury
This states the cause of the danger.
➔ You must take this action to avert the danger.

CAUTION

This notice warns of damage to materials or to the machine
This states the cause of the danger.
➔ You must take this action to avert the danger.

Copyright Protection

This publication must be treated as strictly confidential. It is intended only for internal use by an authorised group of persons. and must not be disclosed to third parties without the written approval of TRANSNORM SYSTEM GmbH.

All documents are protected within the meaning of the Copyright Protection Act. The transfer and duplication of documents, also by way of extract, is strictly prohibited. Non-compliance shall be prosecuted and subject to the payment of compensation.

Service

Our service is available for technical information on our products and their systematic application.

Please have the following information ready when contacting us with queries or spare parts orders:

- Machine type
- Order/project number
- Item number

You will find this information on the type identification plate of your machine. It is located in the vicinity of the drive unit.

TRANSNORM SYSTEM GmbH type identification plate, sample

You will find our contact data at the back of these operating instructions.

Warranty

We shall accept no responsibility for any defects or damage caused by inappropriate use, operating errors or incorrect servicing and maintenance. We expressly point out that only original spare parts and accessories approved by TRANSNORM SYSTEM GmbH may be used.

Unless otherwise stipulated in the contract, the warranty period begins on the day of delivery or with notification of readiness to deliver.

Please file all claims under warranty immediately upon identifying the defect/s. Please quote the order (project) and item number when making a claim.

The warranty shall be in line with statutory regulations. Further claims are excluded.

Please note that the warranty shall be rendered null and void in the case of:

- Use not in accordance with the intended purpose
- Improper connecting and preparatory work not included within our scope of service
- Improper use of controls
- Failure to use original spare parts and accessories
- Conversions or structural modifications which have not been authorised by us in writing

Wearing parts are generally excluded from the terms of warranty

.

Safety

Operating conditions

The conveyor, hereinafter referred to as the machine, is an incomplete machine as defined by the EC Machinery Directive. The machine has been manufactured in keeping with current scientific and technological developments.

However, the machine may pose risks under the following circumstances:

- Any use other than that intended
- Improper operation
- Non-permitted operating conditions
- Failure to follow these instructions
- Failure to comply with the general safety regulations during transport and installation

Intended use

The machine illustrated on the front page is approved solely for the purpose of transporting unit loads corresponding to requirements defined in the service specifications and is intended to be integrated in a fully automatic intralogistic system with a master controller.

Use other than or use that goes beyond that specified is deemed as not for its intended purpose and is therefore prohibited.

Never use the machine to transport persons.

It may only be used in a protected industrial environment with restricted access.

The manufacturer accepts no liability for damage arising from improper use of the machine.

Non-permitted operating conditions

Operation of the machine is prohibited under the following circumstances:

- There are people or objects in the hazardous areas
- Safety devices are not working or have been removed
- If the machine is malfunctioning or damaged
- Maintenance intervals have been exceeded
- Operating parameters have been changed without authorisation

Responsibilities of the operating company/integrator

Machine safety can only be guaranteed when all necessary measures have been implemented.
The operating company/integrator is responsible for planning and implementing appropriate measures.

These instructions are an integral part of the machine. When selling the machine, the operating company must pass on this document to the buyer.

The operating company/integrator of the machine is responsible for its safety. This applies especially to:

- Installation as a complete machine with functioning and compliant safety devices.
- Integration of the machine in such a way that no additional danger/hazards are created.
- The safety of all persons in the vicinity of the machine.
- Fault-free operation of the machine.

Minimising the danger of injury

Take steps to guarantee the safety of persons in the vicinity of the machine, for example:

- Ensure that all work on the machine is carried out by qualified and authorised personnel.
- Ensure that at least two people carry out any maintenance and repair work.
- Make sure all operators are familiar with the safety devices.
- Ensure that the machine and its environment are kept clean and tidy at all times.
- Provide all personnel with protective equipment, such as suitable safety footwear (S1), close-fitting clothing and gloves to protect against mechanical dangers.
  Make sure the protective clothing is worn.
- Provide instructions on how to proceed or act in the event of malfunctions.
- Clarify any issues relating to occupational health and safety as well as environmental protection.

Operating the machine fault-free

Implement the following measures to ensure fault-free operation of the machine:

- Ensure that these instructions are complete, in legible condition and accessible to all personnel at all times.
- Only operate the machine when fully functional and in perfect working order.
- Regularly check the machine and its safety equipment are functioning correctly.

Implement installation layout

Observe the following basic safety principles when connecting several separate components to form an overall system:

- Install guards in areas where there are tail pulley assembles, apex bends, roller arches, conveyor gates, pre-conveyors and transfer drives.
- In any area where there is a transfer drive or conveyor gate, the conveyor belt must have the same speed or run faster in the outfeed section than in the infeed section.
- The national safety regulations valid in the country of the user as well as additional branch-specific regulations must be observed.

Commissioning

This conveyor system is a "partly completed" machine, as defined by the Machinery Directive 2006/42/EC, Article 2g.
This partly completed machine may only carry out an intralogistic function when combined with an appropriate control system and, where applicable, other (partly completed) machinery. It must not be commissioned until it has been ascertained that the partly completed machinery which is the subject of this documentation or the machinery into which it is incorporated comply with the requirements of the Machinery Directive.

Personnel qualification

Installation, maintenance and repair work as well as commissioning demand specialist know-how and qualification of the personnel above and beyond that required for normal operation.
We recommend that you work only with technical personnel trained and authorised by TRANSNORM SYSTEM GmbH.

All persons working at or on the machine must:

- be suitable and sufficiently qualified to carry out the work required.
- have received instruction on handling the machine and be familiar with the protective devices .
- have read and understood these operating instructions and especially the relevant sections relating to their work.
- be familiar with basic occupational health and safety and accident prevention regulations, and with sector-specific regulations.

In these instructions, a distinction is made between the following groups of personnel:

Definition of the personnel groups

Personnel group	Definition
Operating company	The operating company is defined as that using the machine for its intended purpose and having the machine operated by suitable and instructed persons .
Integrator	The integrator installs the partly completed machine for the operating company and integrates it into an overall system of machines with a master controller and safety technology. (Responsible for ensuring conformity of the overall system)
Operating personnel	Personnel who are appropriately instructed by the operating company in the : ▪ Functional and operating procedures for the machine ▪ Possible dangers arising from improper use ▪ Protective devices and measures
Specialised staff	Technically qualified and authorised by the operating company to carry out specific tasks such as installation, maintenance and troubleshooting. Corresponding training in theory and practice is a prerequisite.

The following work is to be carried out by specialised personnel only:

Work requiring specialised knowledge

Work on	Specialised knowledge
Pneumatic components	Such work may only be carried out by personnel with specialised knowledge of and experience in handling pneumatic systems.
Electrical components	Such work may be carried out under the guidance and supervision of an electrician in accordance with the codes of electrical engineering practice.

Remaining risks regarding the machine

The machine's protective devices offer protection against injury.
For some tasks, however, personnel are required to enter the danger zone.
Therefore, an element of risk always remains.

Remaining risks for operating personnel

The following table will enable operating personnel to identify and avoid fundamental dangers and hazards. Professional conduct and implementation of the corresponding measures will help prevent any remaining risks in advance.

Measures for operating personnel to avert risk and prevent damage

Danger	Cause	Measure
Risk of injury	Sharp-edged machine parts	When troubleshooting: ▪ Be alert and proceed with caution ▪ Avoid hectic movements ▪ Wear appropriate protective clothing
	Rotating parts	When troubleshooting: ▪ Do not reach into rotating parts ▪ Wear appropriate protective clothing ▪ Observe warning labels on the machine
	Hot electric motors	▪ Do not touch
	Accumulation of conveyed material	Before remedying a fault: ▪ Watch the conveyor system carefully ▪ Assess whether the system needs to be stopped due to an unclear situation While remedying a fault: ▪ Keep body parts away from the conveyed loads ▪ Remove any pile-up of conveyed material ▪ Only switch the system on again when pile-up of conveyed material has been removed
	Conveyed loads	During operation: ▪ Do not reach into conveyed loads ▪ Observe warning labels on the machine When troubleshooting: ▪ Assess whether the system needs to be stopped due to an unclear situation ▪ If necessary, secure the system so that it cannot restart inadvertently ▪ Be alert and proceed with caution
Damage to the environ-ment	Leaking operating materials	During operation: ▪ Inform technical personnel/shift supervisor

Remaining risks for technical personnel

The following table is intended to help the technical personnel (responsible for installation, repairs or troubleshooting) to detect and avoid fundamental dangers and hazards. Professional conduct and implementation of the corre-sponding measures will help prevent any remaining risks in advance.

It is important to observe the instructions and safety instructions described in the relevant sections during installation, maintenance and repairs. This is particularly important for work that requires the removal of protective devices.

Measures for technical personnel to avert risk and prevent damage

Danger	Cause	Measure
Risk of fatal injury	Accidental machine restart	During maintenance/repair work: ▪ Inform your colleagues that it is prohibited to re-start the machine until notified otherwise ▪ Disconnect the power supply ▪ Apply a label to prevent accidental re-connection of the power supply ▪ Prevent accidental re-connection of the power supply as described in the operating instructions of the system
	Electricity	Machine shut-down: ▪ Disrupt power supply ▪ Secure system against accidental re-start ▪ Establish that the power is off
	Falling or slipping loads	Transport and installation: ▪ Observe the centre of gravity of the machine and the permissible lifting load of the hoists ▪ Secure the machine and hoists to prevent slipping ▪ Read the section on "Transport and installation" and carefully observe the instructions For ceiling suspension of conveying systems: ▪ Observe the assembly instructions of the suspensions used
Fire hazard	Non-permitted operating conditions, e.g., accumulation of load residue, packaging abrasion, dust	During maintenance/repair work: ▪ Observe maintenance intervals

Measures for technical personnel to avert risk and prevent damage

Danger	Cause	Measure
Risk of injury	Sharp-edged machine parts	During maintenance/repair work: ▪ Be alert and proceed with caution ▪ Avoid hectic movements ▪ Wear appropriate protective clothing
	Rotating parts	For maintenance and adjusting works: ▪ Do not reach into rotating parts ▪ Wear close-fitting protective clothing ▪ Have one or more other persons assist you ▪ Observe warning labels on the machine
	Falling machine parts	During maintenance/repair work: ▪ Support heavy parts (especially motors) ▪ Do not step under loose parts or touch them ▪ Secure working area so that personnel are not at risk When working at suspended machines: ▪ Cordon off the work area ▪ Have a second person supervise the operation ▪ Put tools and parts down carefully and prevent them from falling
	Hot electric motors	Before touching: ▪ Allow enough time for them to cool down ▪ Wear suitable and thick protective clothing
	Accumulation of conveyed material	Before remedying a fault: ▪ Carefully observe conveyor system ▪ Assess whether the system needs to be stopped due to an unclear situation While remedying a fault: ▪ Keep body parts away from the conveyed loads ▪ Remove any pile-up of conveyed material ▪ Only switch the system on again when pile-up of conveyed material has been removed
	Conveyed loads	During operation: ▪ Do not reach into conveyed loads ▪ Observe warning labels on the machine While remedying a fault: ▪ Assess whether the system needs to be stopped due to an unclear situation ▪ If necessary, secure the system so that it cannot restart inadvertently ▪ Be alert and proceed with caution During maintenance/repair work: ▪ Disconnect the machine from electric supply during works ▪ Secure the system against accidental restart

Measures for technical personnel to avert risk and prevent damage

Danger	Cause	Measure
Damage to the environ-ment	Leaking operating materials	During disposal: ▪ Collect operating materials in suitable containers ▪ Dispose of waste oil, lubricating grease, cleaning agents containing solvents and similar products correctly

Protective devices

Various protective devices are installed on the machine to prevent body parts from being drawn in and crushed. These devices are listed below.

It is expressly prohibited to render unserviceable, bypass or remove protective devices. These devices may only be taken off temporarily during maintenance or repair work.

If the purchasing contract specifies that certain protective devices are not included in the scope of delivery, the operating company/integrator must assess the potential dangers in accordance with the Machinery Directive. If it proves to be necessary to install additional guards, especially at pinch points and transfer points, they must be installed in accordance with applicable national regulations and guidelines.

With the machine suspended from the ceiling, safety devices, which prevent the risk posed by falling parts, must be installed in accordance with valid national regulations and guidelines.

Refer to the maintenance schedule in the "Maintenance and care“ section for information on inspection intervals.

Protective devices on the machine

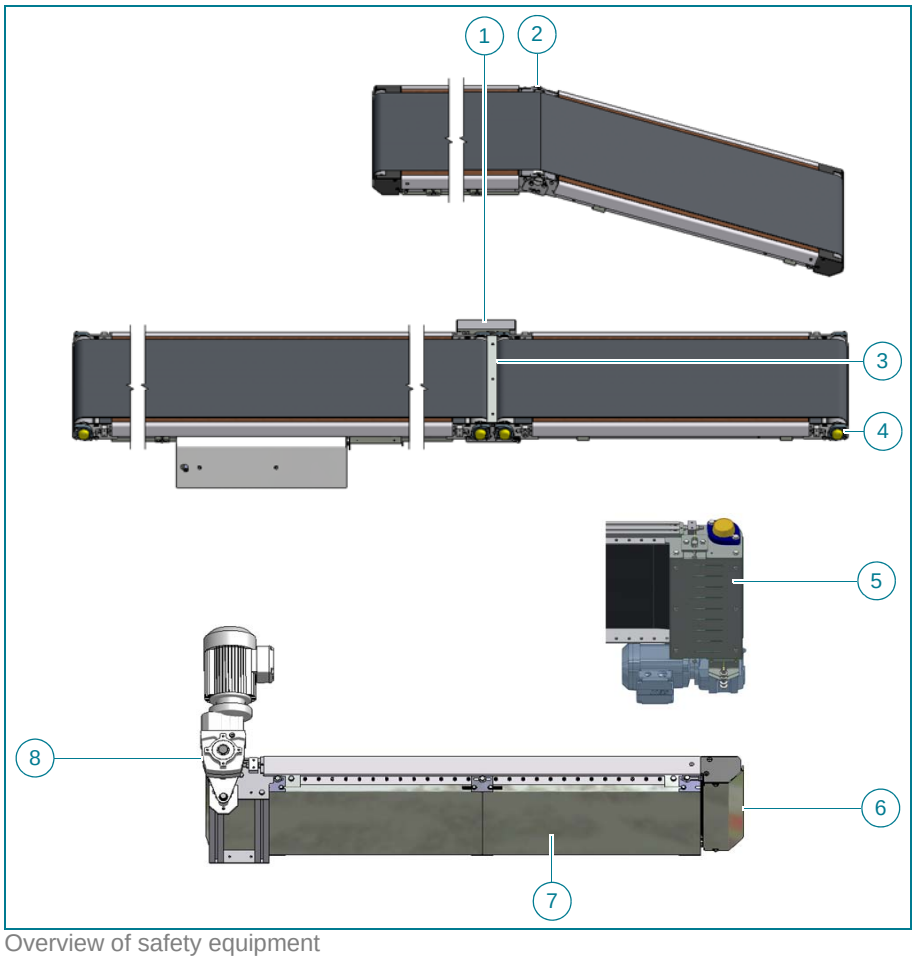

Overview of safety equipment

Safety equipment on the TS 1200

Pos.	Description
1	Chain case, pre-conveyor or conveyor gate
2	Finger guard, apex bend
3	Finger guard, pre-conveyor
4	Protection cap, tail pulley Ø 80
5	Cover, drive
6	Bottom cover, tail pulley
7	Bottom conveyor track cover
8	Feed in protection for shaft

Description

Thanks to its modular design, which allows for a high degree of adaptation to individual demands, the belt conveyor TS 1200 with terminal drive can be used for a wide range of conveying tasks in internal material flow systems for packed and unpacked unit loads.
The standardised sub assemblies, belt materials and optional equipment are varied individually to suit the customer's specific conveying task.

Advantages:

- Cost-effective short-distance conveyor
- Extremely versatile due to a wide range of accessories
- Modular design comprising standardised sub assemblies: High level of flexibility for later adjustments/modifications as a result
- Easy-to-assemble bolted construction
- Low-maintenance/easy to service
- Quick replacement of endless belts on installed systems
- High conveying speeds with low noise output
- Drive pulley with low-wear friction lining

Technical description

The basis of every TS 1200 belt conveyor is a bolted base frame consisting of aluminium extrusion profiles with grooves which are screwed to cross beams at regular intervals.

The frame can be fitted with belt or roller elements depending on the application. Various side guide elements or sensors can be attached to the outside of the conveyor bed by means of a hole matrix and can be adjusted continuously.

A wide variety of terminal drive stations and tail pulley assemblies with various diameters and characteristics means that the conveyor can be perfectly connected to up- and downstream conveyors. Any re-tensioning of the belt changes the length of the conveyor minimally. It is therefore necessary to allow a small clearance to the adjacent conveyor.

The unit is supplied with a shaft-mounted gear motor as standard. Depending on the available space and requirements, drive stations can also be equipped with a transfer drive via a chain or a toothed belt.

Pre-conveyors, conveyor gates, roller arches as well as positive and negative apex bends are also attached to the profile ends of the belt frame and can be combined in virtually any way.

Main dimensions

Please take the dimensions of your specific conveyor from the service specifications of your order confirmation. Application-specific dimensions are given as variables.

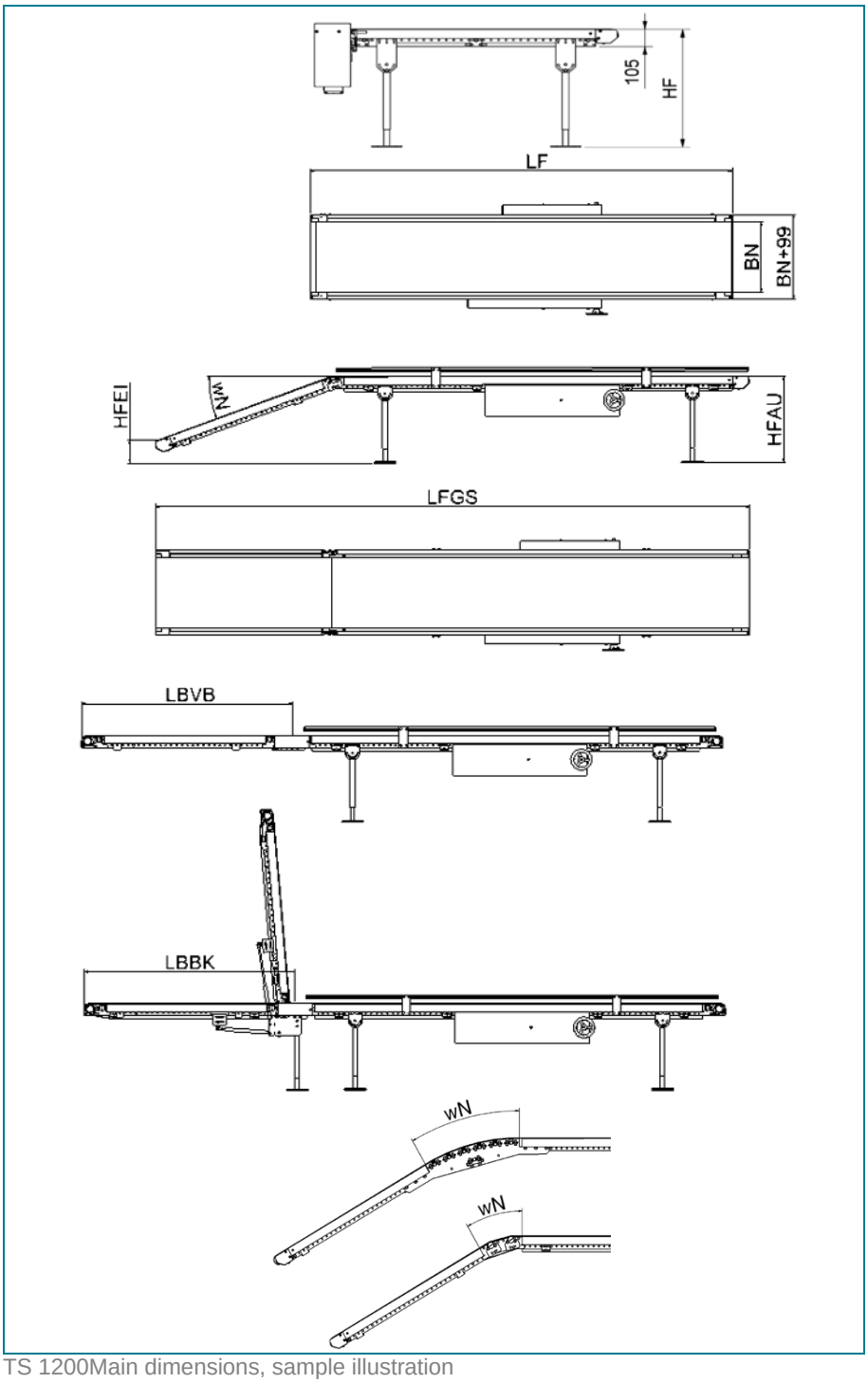

TS 1200Main dimensions, sample illustration

Used variables

Variable	Description
LF	Nominal length
BN	Nominal width
LFGS	Total conveyor track length, projected
HF	Conveyor height
HFEI	Infeed height
HFAU	Outfeed height
wN	Angle of inclination
LBVB	Length of conveyor bed pre-conveyor
LBBK	Length of conveyor bed conveyor gate

Supports and suspensions other than those illustrated may be installed (see service specifications).

Technical data

The technical data for your machine can be found in the service specifications included with the order confirmation. The following lists the general technical data or preference items.

Mechanical data TS 1200

Description	Data
Design versions drive	Ø 80 Ø 100
Design versions tail pulley	Ø 42 Ø 65 Ø 80
Conveyor length, projected (LFGS)	800 mm - 10,000 mm, depending on load and speed
Nominal width (BN)	400, 500, 600, 700, 800, 900, 1,000 mm
Conveying height (HF)	Min. 300 mm
Length of pre-conveyor (LBVB)	700 - 2,000 mm
Conveyor gate length (LBBK)	800 - 1,500 mm
Length of apex bend (Lk)	> 700 mm
Angle of inclination (wN)	Max. 30° Depending on load and belt, a brake motor may be required
Track load (QF)	Up to 50 kg/m
Conveyor belt type (YG)	See service specifications
Conveying speed (vF)	< 120 m/min
Drive power (PN)	0.37 - 1.5 kW, depending on load and speed, see service specifications or motor type identification plate
Type of drive	See service specifications

Electrical data

Description	Data
Motor voltage supply	Standard: 230 V/400 V AC 50 Hz, for deviations see motor type identification plate
Motor brake voltage	Standard: 230 V AC/400 V AC. For optional variations, see motor type identification plate
Type of protection	Standard: IP55, not protected against explosion

Installation location requirements

Description	Data
Ambient temperature	5 °C to +40 °C, up to +50 °C for short periods (max. 1 h)
Relative air humidity	Max. 80 %
Surrounding atmosphere	Normal atmosphere, no potentially explosive atmosphere, no oil or gas in the atmosphere, no corrosive components
Installation	Indoors: Well protected from rain; only securely bolted to solid base

Other data

Description	Data
Year of construction	See type identification plate
Noise emission	Sound pressure level measured in accordance with DIN EN 13023:2003-03 below 77 dB(A).

Required performance level (PLr)

It is necessary to determine the required performance level (PLr) for each safety function. The required performance level for the previously described safety function is determined from the risk graph defined by DIN EN ISO 13849-1.

The path through the risk graph depends on how "severity of injury (S)", "frequency and/or exposure to hazard (F)" and "possibility of avoiding the hazard (P)" are assessed. The level of each risk situation is categorised in five levels from "a" to "e"; this is referred to as the performance level (PL). The control function's contribution to risk reduction is low at PL "a" and high at PL "e".

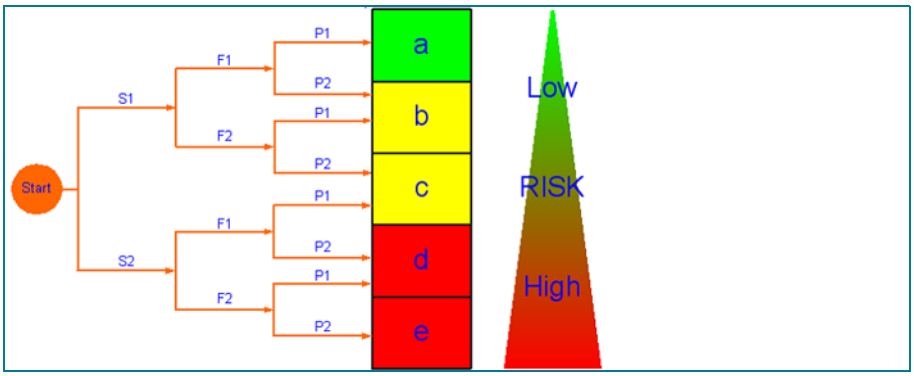

Risk graph

Performance level (PLr)

Safety function	Required performance level (PLr)
Required performance level to prevent unexpected start-up of the conveyor (PLr)	C

Areas of the machine

The conveyor consists of the areas shown below:

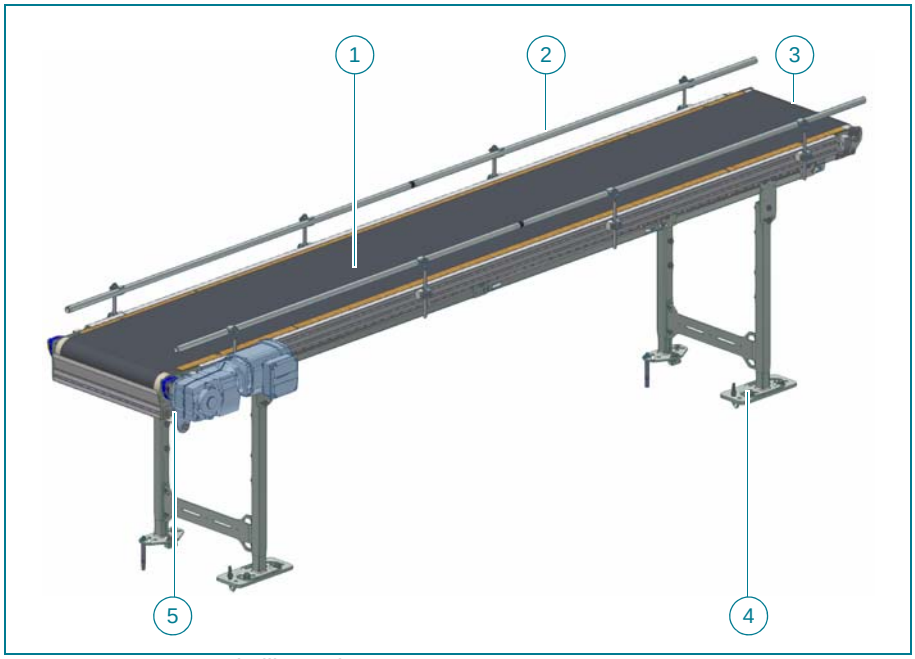

Areas TS 1200, sample illustration

Key to illustration

No.	Description
1	Conveyor track
2	Side guide (optional)
3	Tail pulley
4	Support
5	Drive group

Parts of the machine

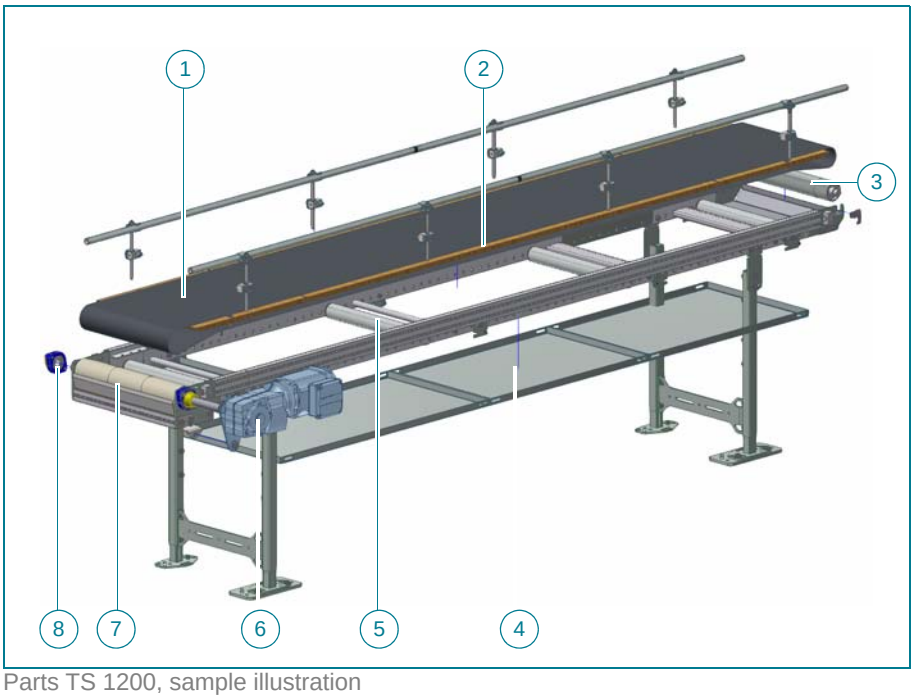

Parts TS 1200, sample illustration

Key to illustration

No.	Description	No.	Description
1	Conveyor belt	5	Return roller
2	Bed	6	Gear motor
3	Pulley	7	Drive pulley
4	Bottom cover	8	Flange bearing

Conveyor configuration

The TS drives can be configured in the following ways. These are defined as shown in the illustrations below.

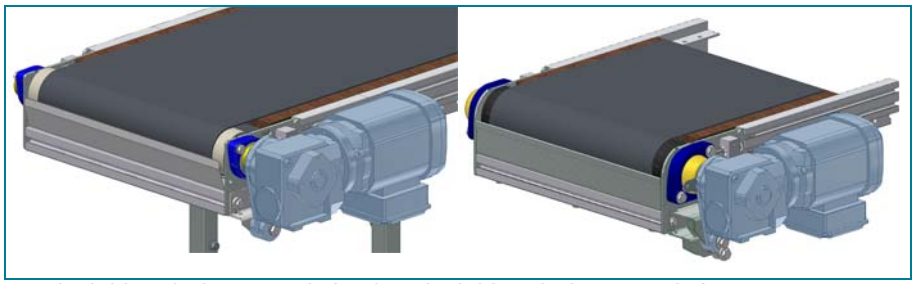

Terminal drive shaft mounted Ø 80/terminal drive shaft mounted Ø 100

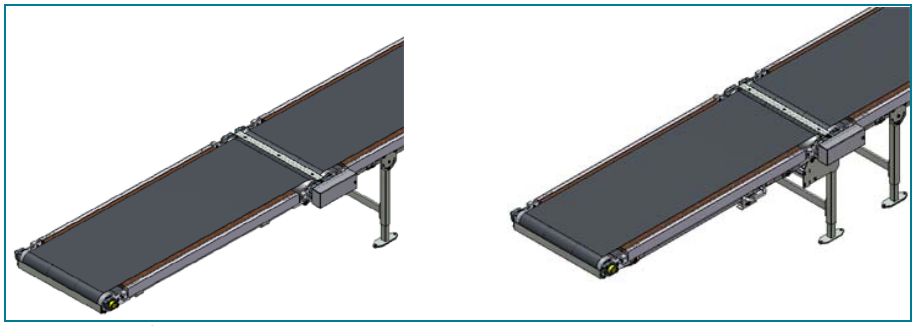

Pre-conveyor/conveyor gate

Roller arch/apex bend

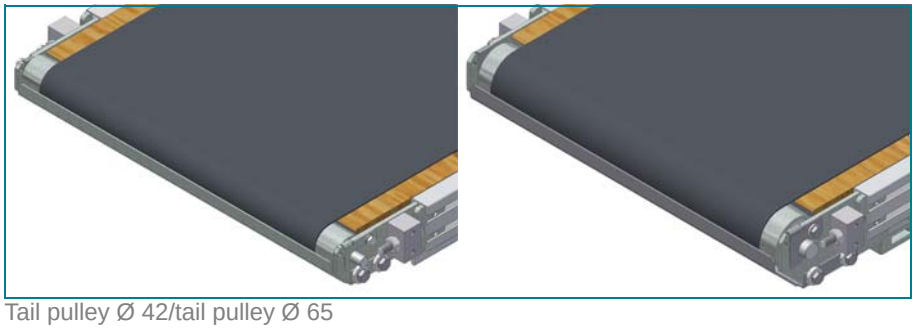

Tail pulley Ø 42/tail pulley Ø 65

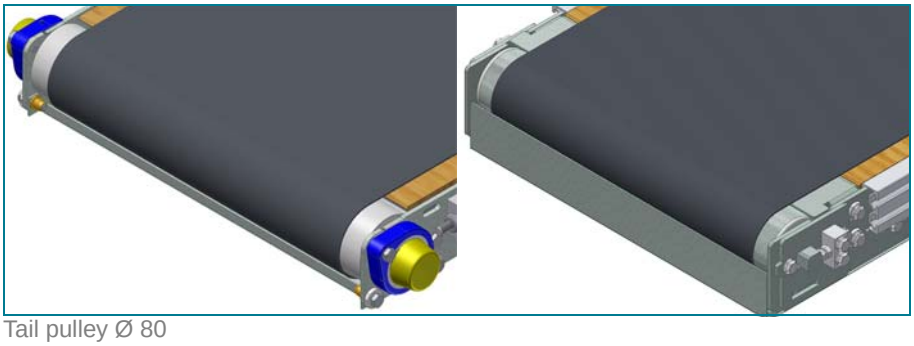

Tail pulley Ø 80

Optional machine equipment

The side guides that are supplied as standard are shown below.

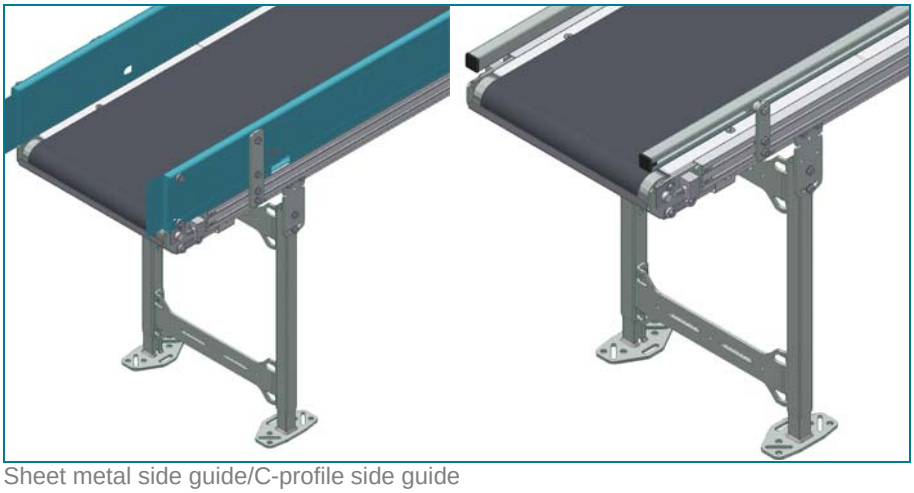

Sheet metal side guide/C-profile side guide

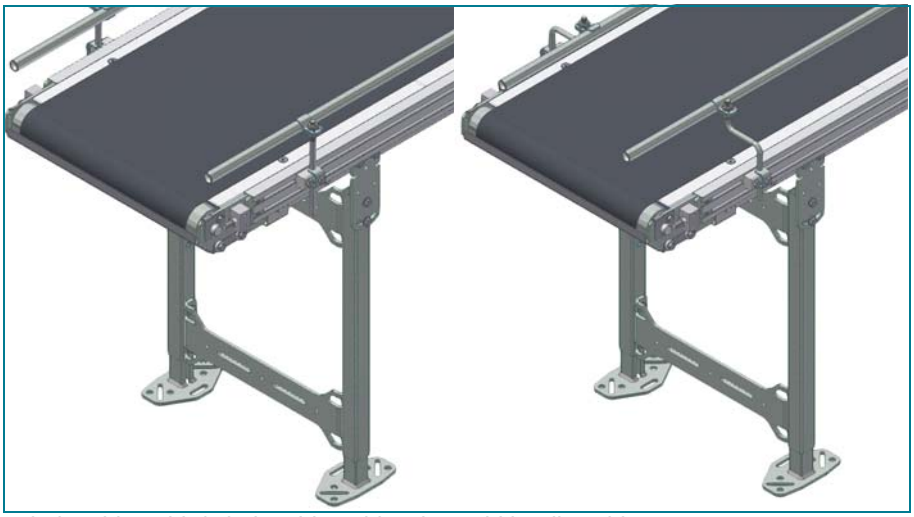

Tubular side guide/tubular side guide, clear width adjustable

Transport and installation

Delivery of the machine

Conveyors up to a length of approx. 3 m are completely assembled at the factory and are pre-adjusted on delivery. Longer conveyors are usually delivered in part components. The individual parts are marked with labels on the section points. Supports, suspensions and other attachments are packed separately and included in the delivery.

Unpacking the machine

Complete the following steps:

1. Remove all transport packaging.
2. Check for possible transport damage.
3. Check that all items listed on the delivery note have been delivered.

✓ Machine has been unpacked and is complete.

Long-term machine storage

If the machine is to be stored for more than four weeks, the conveyor belt must be slackened off in order to prevent damage caused by bulging. The procedure for slackening the belt is described in the maintenance and repair section. If the machine is transported by sea, seaworthy packaging is required.

Observe the permissible operating conditions described in the following for machine storage also.

For questions concerning storage and transport, please contact TRANSNORM SYSTEM GmbH.

Disposing of packaging material

The individual components of the packaging are correspondingly marked and mainly consist of the following materials:

- Wood
- Cardboard
- PP- and PE-foil
- Styrofoam

Sort the packaging components into types and dispose of them in compliance with the local waste disposal regulations. Observe the local guidelines and regulations for disposal in the country of use.

Setting up the machine

Ground requirements

The machine may only be mounted stationary on a stable concrete surface (concrete class at least B25 or the corresponding standard in the country) or on an equivalent steel structure. The safe working load must be at least 25 N/mm². The installation location must not be subject to vibration and must be suitable for the static and dynamic loads. The surface must be level.

If special attachments are used which enable mobile operation, this will be stated in the service specifications.

Permitted operating conditions

DANGER

Explosion hazard!
The machine is not explosion-protected.
➔ Do not operate the conveyor in potentially explosive atmospheres.

The required space for operation and maintenance depends on the individual requirements.

The place of installation must fulfil the following conditions:

- Normal atmosphere (not containing oil or gas, no corrosive components)

- Ambient temperature 5 °C to +40 °C, up to +50 °C for brief periods (max. 1 h)
- Relative air humidity max. 80%
- Internal set-up
- Reliably protected against moisture and precipitation.

Internal transportation

DANGER

Increased risk of accident due to:
Falling or slipping loads.
➔ Observe the permissible load capacity of the hoists and the centre of gravity of the machine. Observe the data provided under "Auxiliary equipment".

The internal transportation of the machine to its final place of installation may be carried out with different lifting devices. Use licensed and suitable lifting equipment only.

The machine or machine parts are only permitted to be lifted from the base frame. If there are support points on the base frame, only these points are suitable for attaching lifting equipment. This guarantees torsion-free transportation.

Please see the delivery note for the real weight.

Auxiliary equipment

Required auxiliary equipment

Overhead crane, gantry crane	Safe working load 2,000 kg
Industrial truck	Safe working load 2,000 kg Min. lifting height 4,000 mm
Lift truck cross beam, safe working load 2,000 kg	
Lift truck hook, safe working load 2,000 kg	
Adjustable cross beam, safe working load 2,000 kg L max. = 4,000 mm L min. = 2,000 mm	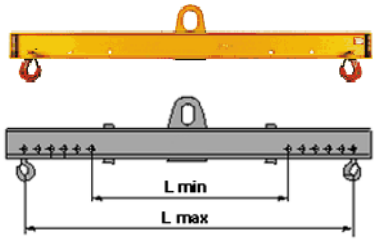
Round slings, safe working load 1,000 kg U min = 3 m	
Round steel Ø 8 mm, min. length BN + 300 mm	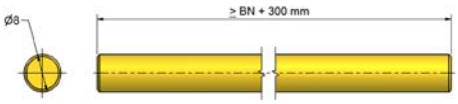

Transport with industrial truck or crane

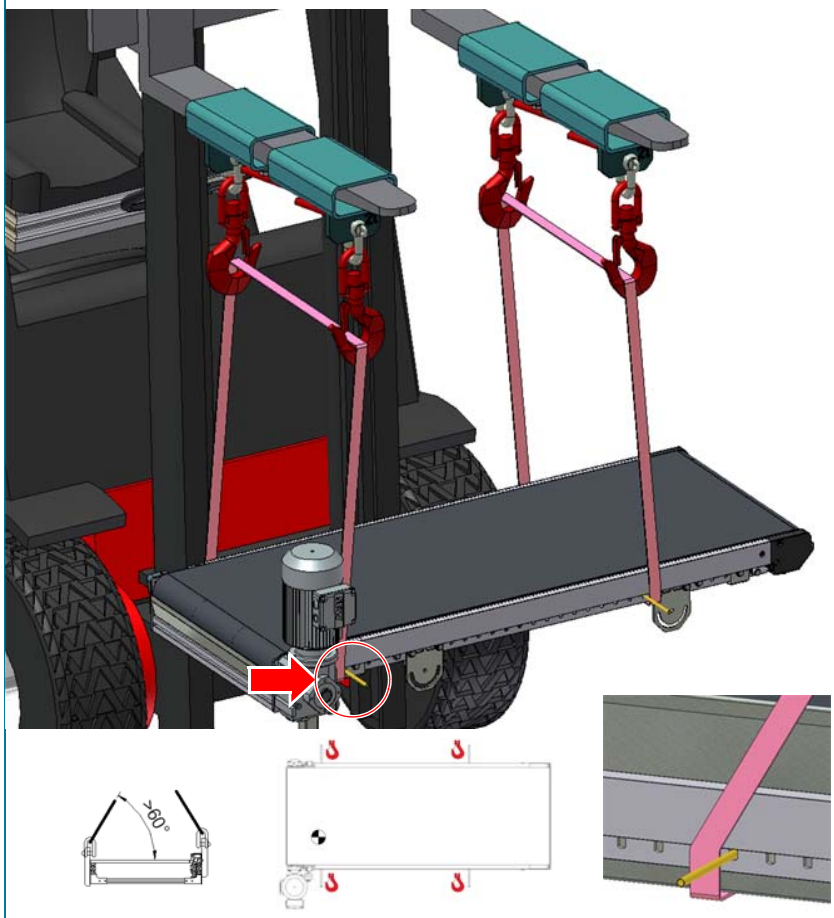

Required auxiliary equipment:
1 x cross beam, adjustable on two sides or 4 x lift truck hooks
2 x round sling
2 x round steel Ø 8, length approx. BN + 300 mm

Final installation on-site

We recommend having the installation carried out by TRANSNORM SYSTEM GmbH. Alternatively, final installation may be carried out under the supervision of or following instruction by TRANSNORM SYSTEM GmbH.

In any case, the assembly must be carried out by specialised staff authorised by the user/operating company.

Please be informed that some work steps of the following installation instructions may not apply to your individual conveyor due to variations in design and equipment.

Assembly

Curve belt conveyors are almost always delivered in one piece. Curve belt conveyors delivered in several parts require installation by TRANSNORM SYSTEM GmbH. Do not install these machines yourself.

Installation

In the case of long conveyors consisting of several sections, it may be advisable to fit supports to the individual sections before assembling the frame. Depending on the design version, the supports are either equipped with stand pipes or support angles. Installation is carried out in accordance with the support layout drawing. The supports must always stand vertically; this also applies to tracks with an incline.

➔ Mount supports

DANGER

Risk of fatal injury through crushing to parts of the body!
Machine can tilt and crush body parts.
➔ Secure the machine to prevent it from falling.
➔ Use hoists to raise and lower the machine.

DANGER

Risk of fatal injury due to crushing to parts of the body!
Machine falls down.
➔ Only use supports/suspensions approved by Transnorm.
➔ Mount supports/suspensions exactly as described in the system layout or support layout drawing, if available.
➔ Do not exceed minimum spaces as defined in the system layout/support layout drawing.

Complete the following steps:

1. Attach the supports or suspensions to the framework of the base frame using the joining elements (1) provided.
2. Release the fixing screws (2) and adjust the angle of inclination.

3. Release the fixing screws (3) and adjust the height.

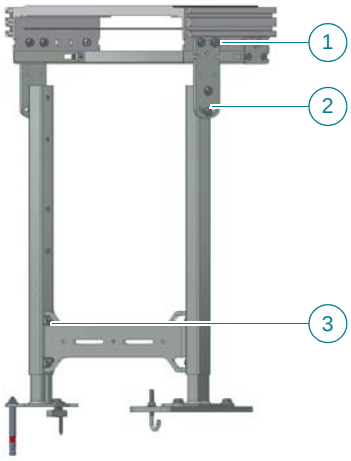

Curve belt conveyors are almost always delivered in one piece. Curve conveyors delivered in multiple parts require installation by TRANS-NORM SYSTEM GmbH. Do not mount these machines yourself.

? Is the conveyor on optimal setting?
The standard curve belt conveyor is delivered with a drawn-in endless conveyor belt. The conveyor is delivered ex works with optimum adjustment.
➔ However, if you do have to readjust the tension of the belt, please proceed as described in the maintenance section.

✓ Supports have been fitted.

➔ Mount the frame

Complete the following steps:

1. Pre-position the individual sections on the conveyor bed as indicated by the labels.

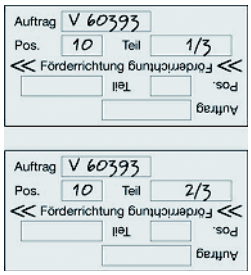

2. Disassemble the tail pulley and insert the belt loop (refer to the section on repairs, paragraph "Replacing the conveyor belt").

3. Push individual sections (1), (2) together and fit with the fixing elements (3) provided.

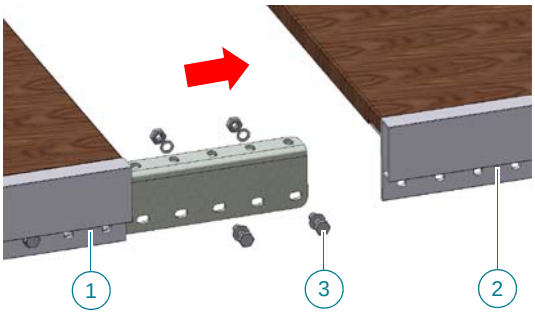

4. If necessary, fit individual parts of the bed with the fixing elements provided.

5. Mount the tail pulley with the conveyor belt inserted (see the operating instructions, repairs section, paragraph "Replacing the conveyor belt").

✓ The frame has been mounted.

➔ Align and anchor the machine, all types

DANGER

Risk of fatal injury due to crushing to parts of the body!
If supports are not anchored, the machine can topple and fall over when moved to position it.
➔ Before aligning it, raise the machine with suitable lifting gear. Refer to the information under "Internal transportation".

DANGER

Risk of fatal injury due to crushing to parts of the body!
Loose fixing screws for height adjustment may cause the machine to slide.
➔ When adjusting supports and suspensions, support the machine additionally.
➔ For suspensions, create a form-fitting connection by means of retaining bolts.

Complete the following steps:

1. Align the machine horizontally and free of torsion in accordance with the required infeed and outfeed height. To do this, loosen the fixing screws for support height adjustment.

2. Check the levelling. Observe the correct heights for infeed and outfeed.
↳ Depending on the system design, different heights may be recommended. The system design engineer will advise on this.

3. Only in the case of floor anchorage: Anchor supports so they cannot change position any more. The foot plates of the supports are equipped with corresponding bore holes.
4. Only in the case of ceiling suspension: Anchor the suspensions so that they can no longer change position. The brackets of the suspensions are equipped with bores already.
5. Use retaining bolts to secure all joints creating a form-fitting connection.
6. Manually check the transfer accuracy at the front and back of the machine. Use loads according to specifications to carry out this check.

✓ The machine has been aligned.

✓ The machine has been installed and aligned.

Mounting the side guides

It depends on the scope of delivery whether your conveyor is delivered with side guides. See service specifications for this information.

Complete the following steps:

1. Mount the side guides.
2. If necessary, mount photoelectric sensors and supports in such a way that it becomes impossible to reach into the conveyed loads.
3. If the hazard is still present, affix the warning label "Hand injury" to the side guide next to the hazardous area on the outside. Make sure it is highly visible.

✓ Side guide has been fitted.

Electrical connection

DANGER

Risk of fatal injury caused by electricity!
The machine is powered with 3-phase alternating current.
➔ The electrical installation must be carried out by qualified and authorised electricians only.

Complete the following steps:

➔ Connect the motor according to the wiring diagram provided by the motor manufacturer. This is included in the motor delivery (see interior of the terminal box cover).

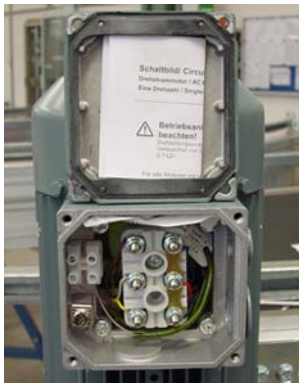

↳ If this wiring diagram is missing, the motor must not be connected.

✓ The machine has been connected.

Operation

Commissioning

Essentially the same procedure is carried out for commissioning and start-up after maintenance.

The daily start-up process via the control unit of the overall conveyor system is described in the system documentation or in the control documentation.

The machine is designed for the following electrical connection data:

- 3 phases, neutral conductor and earthing conductor
- Alternating voltage 400 V
- Line frequency 50 Hz.

Commissioning and start-up after service and maintenance work

Requirements:

✓ Machine has been installed appropriately.

✓ The working area of the machine is inaccessible for unauthorised personnel.

✓ The main switch for the power supply to the machine is switched off and has been secured against accidental switch-on.

✓ Machine has not been out of operation for longer than 4 weeks.

➔ Check installation

Complete the following steps:

1. Check the position of all pulleys and rollers.
2. Check that drive elements are correctly fitted, aligned and tensioned.
3. Check the machine for foreign particles and remove them if necessary.

✓ Installation has been checked.

➔ Carry out electrical installation

DANGER

Risk of fatal injury caused by electricity!
The machine is supplied with 3-phase alternating current.
➔ The electrical installation is to be carried out by qualified and authorised electricians only.

Complete the following steps:

1. Install all required cables.
2. Attach required plugs to all cable ends.
3. Attach cables and fit all required connections in compliance with the manual of the motor manufacturer (see appendix, section electrical installation).

✓ Machine has been connected.

➔ Check direction of rotation

WARNING

Risk of injury due to exposed machine parts!
Rotating machine parts may retract parts of the body, hair and clothes and cause crushing.
➔ Wear close-fitting protective clothing.
➔ Use a hairnet for long hair.
➔ Do not reach into machine when in operation.
➔ Do not access the machine.
➔ Ask a second person to supervise.

Complete the following steps:

1. Switch the machine on briefly.
2. Check for correct direction of rotation.
3. Switch the machine off.

✓ Direction of rotation has been checked. Machine running.

➔ Carry out a test run

WARNING

Risk of injury due to exposed machine parts!
Parts of the body, hair and clothing can become caught in rotating machine parts and crushed.
➔ Wear close-fitting protective clothing.
➔ Use a hairnet for long hair.
➔ Do not reach into machine when in operation.
➔ Do not access the machine.
➔ Ask a second person to supervise.

Complete the following steps:

1. Switch on machine.
2. Check it is running smoothly.

? *Noise output*
If excessive noise occurs:
➔ Locate source and eliminate fault, see "Troubleshooting".

3. Check the conveyor belt for correct tension and adjustment.

? *The conveyor belt moves off to the sides.*
Belt must be readjusted.
➔ See the section on "Tightening and adjusting the conveyor belt" in "Maintenance and repair".

4. Remove all foreign particles from the working area of the machine.

✓ The machine is ready for normal application.

✓ The machine has been put into operation.

Normal operation

Normal operation includes the daily switch-on and switch-off procedure and machine use by operating personnel.

Operation of the conveyor via the overall conveyor control system is normally described in the system documentation or in the control system documentation.

If the machine has been out of operation for more than 4 weeks, all of the steps described in the maintenance schedule must be carried out. Then proceed as described in the "Start-up" section.

Shutdown

The shutdown procedure includes switching off the machine before any service, maintenance and repair works or before downtimes.

Complete the following steps:

1. Turn off the main switch for the machine's power supply in accordance with the control unit documentation.
2. Secure to prevent the machine from being switched on inadvertently.
3. Switch components driven by compressed air to compressed air-free. Reduce integrated pressure accumulator to 0 bar.
4. Disconnect the machine from the compressed air supply.

✓ The machine has been decommissioned.

Maintenance and care

The steps described in this section are to be carried out by qualified personnel only.

Important information regarding electrical installations:

- Regularly check the electrical equipment
- Refasten loose connections and joints
- Immediately replace damaged lines and cables
- Always keep the control cabinet closed

Maintenance work

Routine maintenance is a requirement for safe operation of the machine. Adhere to the intervals given in the maintenance schedule. Maintenance also includes regular cleaning in accordance with the specific operating conditions.

Motor maintenance

Electric motors are to be serviced as recommended by the manufacturer. For detailed information, please refer to the operating instructions of the motor manufacturer, section on service inspection/maintenance. You will find these documents enclosed with these operating instructions.

Gear unit maintenance

Gear units must be serviced according to the manufacturer's specifications. For detailed information, please refer to the operating instructions of the motor manufacturer, section on service inspection/maintenance. You will find these documents enclosed with these operating instructions.

We will provide an optimised maintenance contract based on your individual requirements upon request. In order to guarantee the safe operation of the machine, we recommend you avail of our TRANSNORM SYSTEM service at least once a year.

Lubricants

Lubricants

Type of lubricant	Description
Gear oil	See motor manufacturer's operating instructions (enclosed)
Lubricating grease	ARAL HLP 2, BP Energrease LS-EP 2, ESSO Beacon EP 2, KLÜBER Staburags NBU 12, KLÜBER Centoplex EP 2, MOBIL Mobilux EP 2, SHELL Alvania R2
Chain oil	OKS 340, OKS 341, BECHEM Berumoly P 73, BECHEM Berumoly P 80

Maintenance schedule

The activities described in the maintenance schedule are based on one-shift operation.

Please refer to the section on "Maintenance and repair" for instructions on the relevant maintenance work provided that it may be carried out by technical personnel as indicated. Please ensure full compliance with the safety instructions in each section.

Event-related maintenance schedule (e.g.: damaged loads)

Interval	Assembly group	Checks/measures
Immediately	Complete machine	Visual inspection: ▪ Accumulation of load residue? If so, remove residue from the machine. ▪ Foreign particles/foreign objects left on the conveyor belt or in the pulley/roller areas? If so, remove the particles/objects from the machine.

Operation-related maintenance schedule

Interval	Assembly	Maintenance/inspection
Weekly	Complete machine	Visual inspection: ▪ After work or in the case of a shift change-over, make sure all possible load residues are cleared out of the machine. ▪ Foreign particles/foreign objects are not permitted on the conveyor belt or in the pulley/roller areas.
Weekly	Protective devices	Visual inspection: ▪ Is the equipment complete according to the specifications in the operating instructions? ▪ Is all the equipment undamaged and functional?
Weekly	Conveyor belt	Visual inspection: ▪ Is the belt soiled? If so, clean belt. ▪ Is the surface damaged? If so, replace belt. ▪ Is the belt bulging up? If so, correct belt tension and adjustment.
Depending on the individual case	Gear motor Observe the operating instructions provided by the manufacturer!	Gear: ▪ Are there any oil marks under the gear? If so, seal off leak and correct oil level. ▪ Check mounting and alignment. ▪ Is there abnormal running noise? Check bearings. Motor: ▪ Check cable routing and temperature. ▪ Is there abnormal running noise? Check bearings. ▪ Check cooling fins and air intakes.
Monthly	Drive pulley	Visual inspection: ▪ Is the drive pulley soiled? If so, clean the pulley. ▪ Is the surface damaged? If so, replace the pulley.
Monthly	Flange bearings	Inspection: ▪ Can abnormal running noise be heard from bearings? If so, replace bearings. ▪ Compare bearing temperatures. If one bearing is at a significantly higher temperature, replace it.
Every 6 months	Joining elements	Check that bolts subject to dynamic load are tight.

Operation-related maintenance schedule (contd.)

Interval	Assembly	Maintenance/inspection
Quarterly	Example*: Bottom covers, drive stations	Inspection: ▪ Soiling present? If so, remove covers and clean them.
Quarterly	Supports with rubber-metal buffers	Visual inspection: ▪ Rubber-metal buffer damaged? If so, replace rubber-metal buffer. ▪ Rubber-metal buffer loose? If so, tighten joining elements.

* In a line of systems with the same conveyor type and same operating conditions.

Please refer to the section on "Maintenance and repair" in these operating instructions for information on how to carry out the relevant maintenance and repair work.

Cleaning and care

DANGER

Risk of injury as particles may shoot out when working with compressed air!
Blindness and injuries to the skin are possible.
➔ Wear personal protection equipment
➔ Wear protection goggles

DANGER

Increased risk of accident due to:
Exposed machine parts when protective devices are removed.
➔ Do not reach into running machine.
➔ Do not access the machine.
➔ Switch the machine off during cleaning work that does not require the machine to be in operation.
➔ Secure the machine so that it cannot be switched on inadvertently.

Clean the machine regularly and appropriately for the degree of soiling. It may only be cleaned dry (with a brush, cloth, compressed air, etc.). Make sure the machine and especially the electrical components are protected from wetness.

Maintenance and repair

Spare part purchasing

Only genuine TRANSNORM SYSTEM GmbH spare parts may be used. DIN parts may be ordered from specialised trade.

When making inquiries or placing orders, we recommend that you send a copy of the spare parts list to our customer service department, stating the type and amount of parts required. You will find the address at the beginning of these operating instructions.

The spare parts list forms part of the technical order documentation.

The work steps described in this section are to be carried out by qualified personnel only.

Tools, equipment and supplies

Tools, equipment and supplies

Tools	Auxiliary materials	Equipment
Set of tools (spanner, screwdriver, pliers etc.)	Pneumatic screwdriver	Power and voltage supply
Torque spanner	Toothed belt tension measuring tool, mechanical	Compressed air supply for cleaning
Circlip pliers	Device for lifting and lowering the machine or parts of it	
Combination spanner 10 13 14 15 17 19 22 and 24 mm	Transport cart, movable pedestals with automatic locking device	
Hexagon socket wrench 2 2.5 3 4 5 6 and 8 mm	Ladders, steps, pedestals on working platforms	
Hexagon socket wrench with ball head 5 and 6 mm	Assembly paste	

Tightening torques

The tightening torque requirements are based on an average coefficient of friction µtotal=0.125. They must be observed for screwed connections.

The tightening torque for special connections are specified in the drawings.

Tightening torques

Values for screw connections on steel parts						
	Electro-galvanised screws			Black, untreated screws		
	Tightening torques [Nm]			Tightening torques [Nm]		
d	5.6	8.8	10.9	5.6	8.8	10.9
M5	2.5	5.4	7	2.8	6	8
M6	4.5	9.5	13	4.8	10	14
M8	11	23	32	12	25	35
M10	22	46	64	23	49	69
M12	38	80	110	40	86	120
M14	60	125	180	64	135	190
M16	92	195	275	98	210	295

Data for screw connections on aluminium parts		
	Electro-galvanised screws	
	Tightening torques	
d	5.6	8.8/10.9
M5	2.5	5.4
M6	4.5	9.5
M8	11	23
M10	22	46
M12	28	80
M14	60	125
M16	92	195

When using taperlock bushes for drive elements, observe the following tightening torques.

Tightening torques

Bush no.	1008 1108	1310 1315	1210 1215	1610 1615	2012 2017	2517 2525
Tightening torque [Nm]	5.6	20	20	20	30	50
	Check the tightening torques after 1 hour of operation.					

Guards

Fixed guards as defined by the machinery directive 2006/42/EC are exclusively to protect against risks related to moving parts (machinery directive 2006/42/EC: Addendum 1 No. 1.3.8.1 and 1.3.8.2). The machinery directive stipulates that these protective devices must be attached by means of captive fasteners so that on removal they remain attached to the protective devices or machine.

TRANSNORM provides captive fasteners for protective devices if the operating company needs to remove a protective device from a machine. This is necessary for maintenance and cleaning. Generally no hazard is posed by the loss of captive fasteners when a fixed guard is removed from the machine by technical personnel to conduct repairs.

TRANSNORM uses fixed guards to provide effective protection in hazardous areas. Such protective devices may include covers

- that are rarely/never removed
- that are opened/removed only by technical personnel
- that cover only a lower potential hazard
- that are located on machines that are operated behind a master protective cover/enclosure

No captive fasteners are fitted on these covers as the risk potential is classified as low. In this case, the individual parts normally remain assembled when carrying out repairs on site or in the workshop.

Guards that need to be opened/removed by the operating company for maintenance purposes generally comprise the following covers:

- Covers on drive assemblies (e.g. protective covers/hoods for chain and toothed belt drives)
- Covers on pinch points if they have to be removed or opened for maintenance purposes (e.g. protective covers for snub rollers)
- Bearing covers, covers on rotating parts (e.g. covers on pulley bearings)
- Bottom covers (e.g. perforated plates at bends)

Disassembling/assembling the bottom cover

Requirements:

✓ Machine has been taken out of operation.

✓ Machine has been secured to prevent it from being switched on inadvertently.

➔ Remove the bottom cover

WARNING

Increased risk of accident!
The bottom cover can tilt and crush parts of the body.
➔ Secure the bottom cover to prevent it from falling.

Complete the following steps:

1. Release the joining elements (1) on both sides and push them.
↳ The joining elements (1) remain in the cover (2).
2. Detach cover (2).

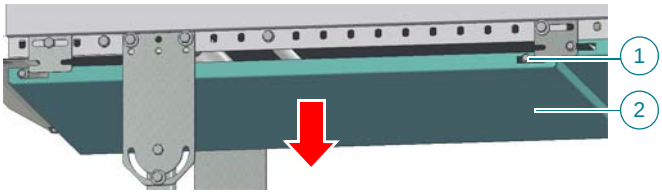

✓ The bottom cover has been removed.

➔ Assemble the bottom cover

Complete the following steps:

➔ Assembly is carried out in the reverse order.

✓ The bottom cover has been fitted.

✓ The bottom cover has been removed/fitted.

Replacing the side guide

The side guide must be removed for certain maintenance and repair work, but not replaced. When replacing, have the new side guide ready for use as per the spare parts list.

Sheet-metal side guide

Requirements:

- ✓ Machine has been taken out of operation.
- ✓ Machine has been secured so that it cannot be switched on inadvertently.
- ✓ The bottom cover has been removed.

➔ Disassemble the side guide

DANGER

Increased risk of accident due to:
Falling or slipping loads.
➔ Observe the permissible lifting load of the hoists.
➔ Secure the load properly.

Complete the following steps:

1. Remove the joining elements (1).

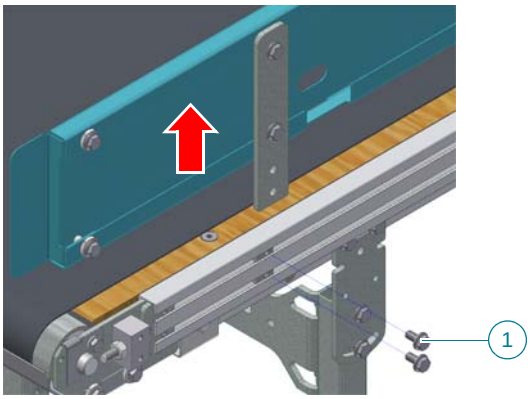

2. Remove the side guide with the support.
3. Place the side guide on an appropriate surface.

✓ Side guide has been removed.

➔ Assemble the side guide

Complete the following steps:

➔ Assembly is carried out in the reverse order.

✓ The side guide has been fitted.

✓ The sheet-metal side guide has been replaced.

Tubular side guide

Requirements:

- ✓ Machine has been put out of operation.
- ✓ Machine has been secured to prevent it from being switched on inadvertently.

➔ Disassemble the side guide

Complete the following steps:

1. Mark the position of the side guide supports (1) on the support block.

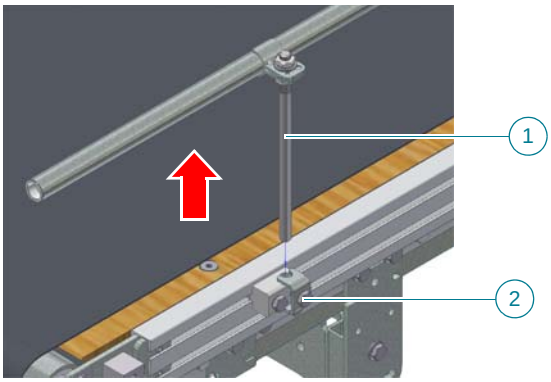

2. Release the joining element (2) at the support block.
3. Remove the side guide with the support.
4. Place the side guide on an appropriate surface.

✓ The side guide has been removed.

➔ Assemble the side guide

Complete the following steps:

1. Position the side guide support (1) at the support block.
2. Tighten the joining element (2).

✓ The side guide has been fitted.

✓ The tubular side guide has been replaced.

C-profile side guide

Requirements:

- ✓ Machine has been put out of operation.
- ✓ Machine has been secured to prevent it from being switched on inadvertently.

➔ Disassemble the side guide

Complete the following steps:

1. Remove the joining elements (1).

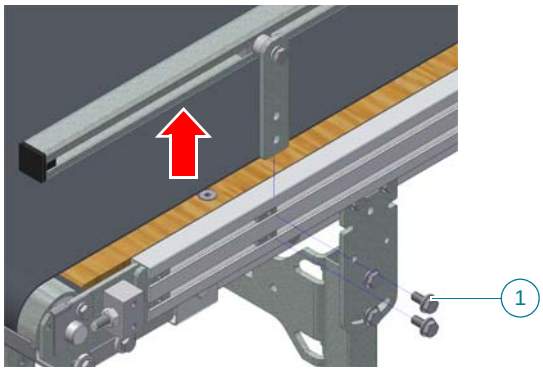

2. Remove the side guide with the support.
3. Place the side guide on an appropriate surface.

✓ The side guide has been removed.

➔ Assemble the side guide

Complete the following steps:

➔ Assembly is carried out in the reverse order.

✓ The side guide has been fitted.

✓ The C-profile side guide has been replaced.

Replacing the conveyor belt

Requirements:

- ✓ Machine has been taken out of operation.
- ✓ Machine has been secured so that it cannot be switched on inadvertently.
- ✓ The side guide has been removed.
- ✓ The gear motor has been removed.

➔ Release conveyor belt tension

Complete the following steps:

➔ Release belt tension at the drive station. Follow the steps described in "Tensioning/adjusting the conveyor belt".

↳ Alternatively release belt tension on the tail pulley side.

✓ The conveyor belt has been loosened.

➔ Disassemble the bed

Complete the following steps:

1. Remove the joining elements (1) of the bed.

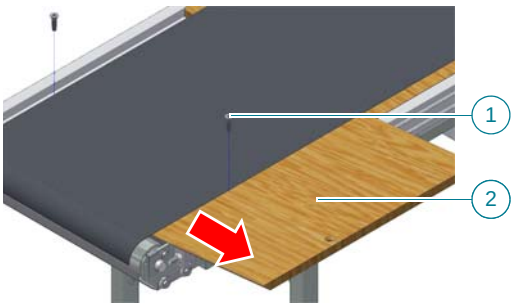

2. Disassemble the sections of the bed (2).

✓ The bed has been disassembled.

➔ Disassemble the drive pulley

WARNING

Increased risk of accident!
The drive pulley may tip over and cause crushing to parts of the body.
➔ Secure the drive pulley to prevent it from dropping.
➔ Use hoists to lift the drive pulley on and off.

Complete the following steps:

1. Support the drive pulley (1) with workshop equipment.

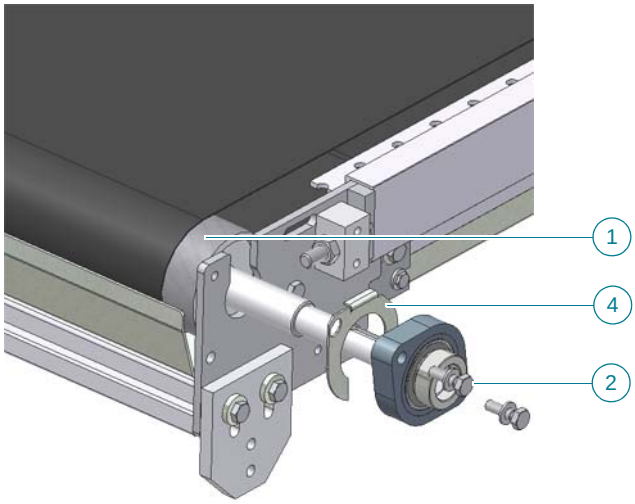

2. Remove the joining elements of the flange bearings (2) and pull off the flange bearings (3).
3. Remove the spacer (4).
4. Lift the drive pulley and pull it out of the belt loop.

✓ The drive pulley has been disassembled.

➔ Disassemble the belt guidance

Complete the following steps:

1. Remove the joining elements (1) on both sides.

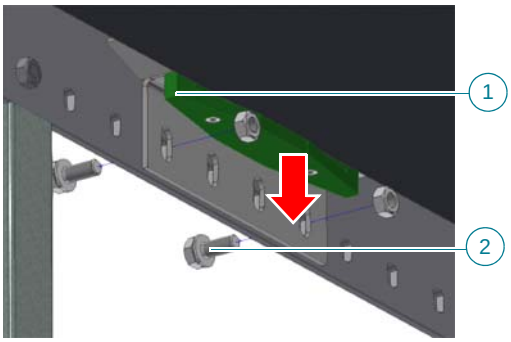

2. Remove the guide (1).

✓ The belt guidance has been disassembled.

➔ Insert the conveyor belt

Complete the following steps:

➔ Place the new belt in centred position in the middle of the base frame and roll it out.

✓ The conveyor belt has been inserted.

➔ Assemble the drive pulley

Complete the following steps:

➔ Assembly is carried out in the reverse order.

✓ The drive pulley has been assembled.

➔ Assemble the bed

Complete the following steps:

➔ Assembly is carried out in reverse order.

✓ The bed has been assembled.

➔ Assemble the side guide

Complete the following steps:

➔ Follow the steps described in "Replacing the side guide".

✓ The side guide has been assembled.

➔ Mount the gear motor

Complete the following steps:

➔ Follow the steps described in "Replacing the gear motor".

✓ The gear motor has been mounted.

➔ Tighten/adjust the conveyor belt

Complete the following steps:

➔ Follow the steps described in "Tensioning/adjusting the conveyor belt".

✓ The conveyor belt has been tightened/adjusted.

✓ The conveyor belt has been replaced.

Tensioning/adjusting the conveyor belt

The conveyor belt must run centred on the pulleys. The belt run is adjusted by means of the tensioning bolts and adjusting screws. Conveyor belts require a certain tension to operate efficiently. When tensioning, the belt must not be stretched by more than 0.2 %.

Terminal drive

The following steps basically apply to all drive versions. Exceptions are listed separately.

Requirements:

✓ Machine has been taken out of operation.

✓ Machine has been secured so that it cannot be switched on inadvertently.

✓ All rollers or pulleys are positioned at right-angles to the conveying direction and centred in the frame.

WARNING

Risk of injury due to open machine parts!
Parts of the body, hair and clothing can become caught in rotating machine parts and crushed.
➔ Wear close-fitting protective clothing.
➔ Use a hairnet to cover long hair.

Complete the following steps:

1. Loosen grub screw (5) on both sides.

2. Undo counter nuts (1) on both sides.

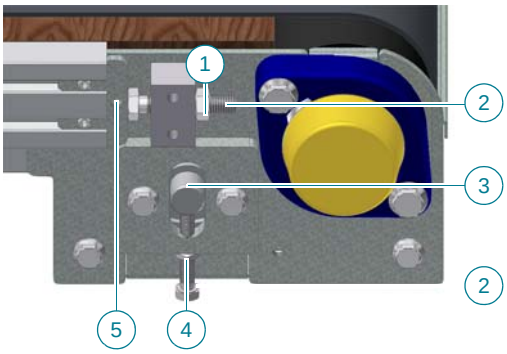

3. Only for Ø 100: Loosen counter nut (4) for the snub roller on both sides.
4. Tension and adjust the belt by turning the tensioning screws (2).

↳ The belt will have a delayed response to the adjustment. Therefore, only adjust the tensioning screws slightly. Wait until the belt completes several rotations before adjusting again.

? *When tensioning, the belt may only be stretched by 0.2 %.*
➔ Mark the belt with tape or a thin marker to check the stretching of the belt.

5. Switch on the machine.
6. Check that the belt is running correctly.
7. Repeat steps 2 to 5 until the belt is running correctly.
8. For Ø 100: Only adjust the snub roller (3) if necessary.
9. Tighten all counter nuts.

✓ The conveyor belt has been tensioned/adjusted with terminal drive.

Tensioning station (conveyor bed)

Requirements:

- ✓ Machine has been taken out of operation.
- ✓ Machine has been secured to prevent it from being switched on inadvertently.

Complete the following steps:

➔ Change the belt tension by turning the tension axle (1). Use an SW17 wrench. The arrow points in the direction for loosening the belt.

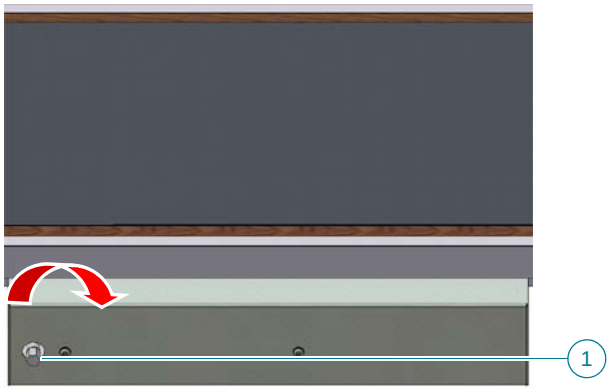

? *When tensioning, the belt may only be stretched by 0.2 %.*
➔ Mark the belt with tape or a thin marker to check the stretching of the belt.

✓ The conveyor belt has been tensioned/loosened via the tensioning station.

Tail pulley

The tensioning equipment may vary according to tail pulley type and diameter. The steps are identical for all tail pulley assemblies.

Requirements:

- ✓ Machine has been taken out of operation.
- ✓ Machine has been secured so that it cannot be switched on inadvertently.
- ✓ All rollers or pulleys are positioned at right-angles to the conveying direction and centred in the frame.

WARNING

Risk of injury due to open machine parts!
Parts of the body, hair and clothing can become caught in rotating machine parts and crushed.
➔ Wear close-fitting protective clothing.
➔ Use a hairnet to cover long hair.

Complete the following steps:

1. Undo the grub screws (3) on both sides.
2. Loosen the counter nuts (1) and turn them back on both sides.

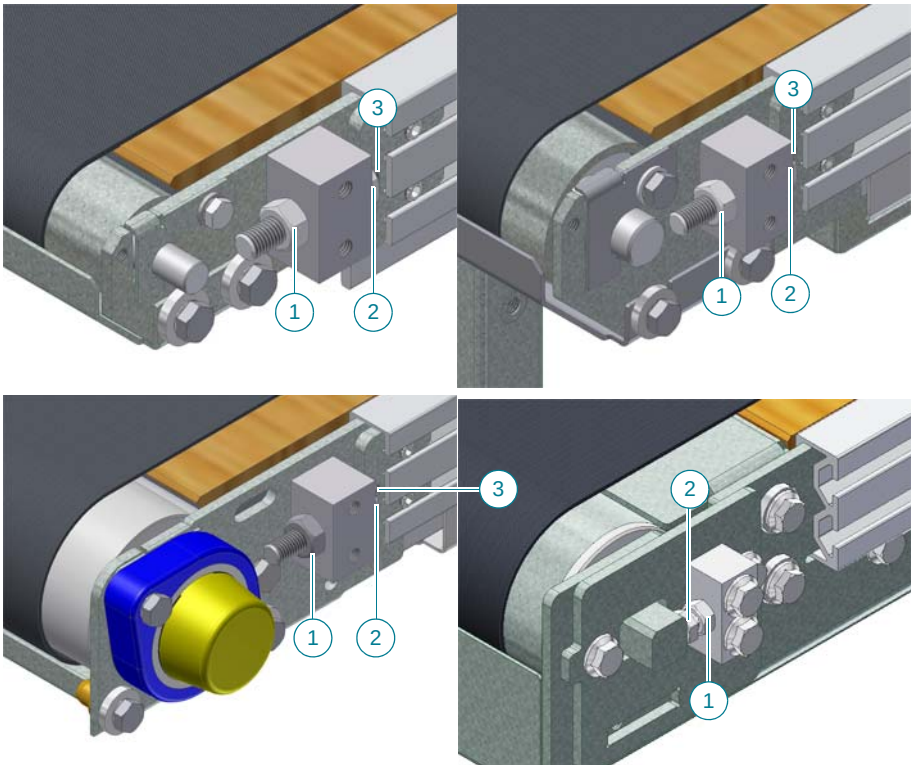

3. Adjust the tensioning screws (2) on both sides for tensioning/adjusting the belt run.

↳ The belt will have a delayed response to the adjustment. Therefore, only adjust the tensioning screws slightly. Allow the belt to run for a few cycles before each adjustment.

? *When tensioning, the belt may only be stretched by 0.2 %.*
➔ Mark the belt with tape or a thin marker to check the stretching of the belt.

4. Switch on the machine.
5. Check that the belt is running correctly.
6. Switch off the machine.
7. Repeat steps 3 to 5 until the belt is running correctly.
8. Tighten all joining elements.

✓ The conveyor belt has been tensioned and adjusted.

Replacing the gear motor

Requirements:

- ✓ Machine has been taken out of operation.
- ✓ Machine has been secured so that it cannot be switched on inadvertently.
- ✓ Motor has cooled down.

➔ Disassemble the gear motor

WARNING

Increased risk of accident!
Motor may tilt and crush parts of the body.
➔ Secure the motor to prevent it from dropping.
➔ Use lifting gear to lift the motor on and off.

Complete the following steps:

1. Disconnect all power supply lines from the motor.
2. Remove the cap (1).
3. Undo the joining elements (2).

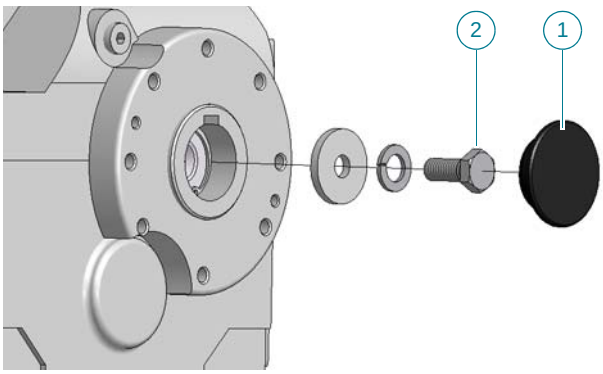

4. Undo the joining elements (3).

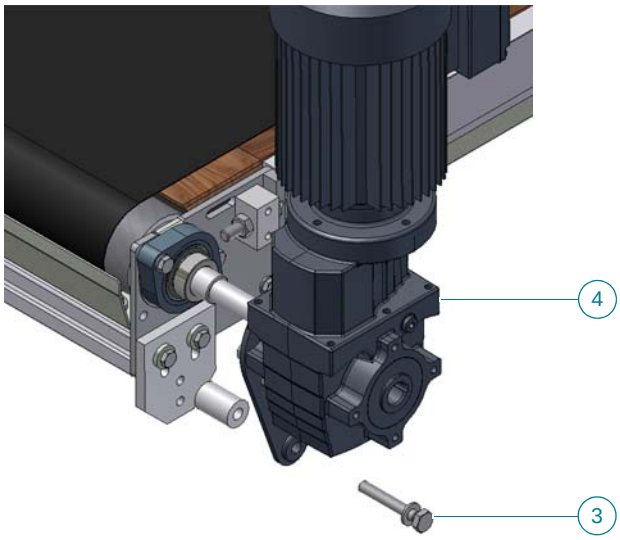

5. Pull the gear motor (4) off the shaft.
6. Place the gear motor on to a suitable base.

✓ The gear motor has been disassembled.

➔ Mount the gear motor

Complete the following steps:

1. Apply assembly paste to the pulley journal.
2. Assembly is carried out in the reverse order.

✓ The gear motor has been mounted.

✓ The gear motor has been replaced.

Replacing the flange bearings

The following steps apply to all drive versions. Only replace flange bearings in pairs.

Requirements:

- ✓ Machine has been shut down.
- ✓ Machine has been secured so that it cannot be switched on inadvertently.
- ✓ The gear motor has been disassembled.
- ✓ The conveyor belt has been loosened.

➔ Disassemble the flange bearings

WARNING

Increased risk of accident!
The drive pulley may tip over and crush parts of the body.
➔ Secure the drive pulley to prevent it from dropping.
➔ Use hoists to lift the drive pulley on and off.

Complete the following steps:

1. Remove the protective cap (4).

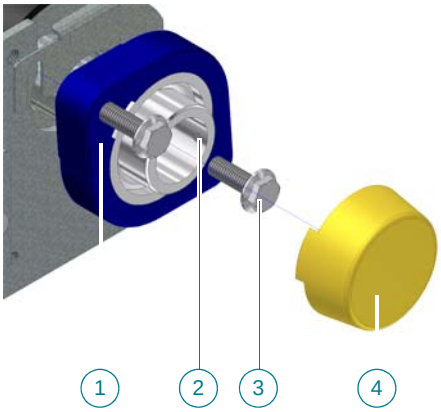

2. Loosen the grub screws (2).
3. Remove the joining elements (3) of the flange bearings.
4. Pull the flange bearings (1) off the shaft journal.

✓ Flange bearings have been disassembled.

➔ Assemble the flange bearings

Complete the following steps:

➔ Assembly must be carried out in the reverse order.

✓ The flange bearings have been assembled.

➔ Mount the gear motor

Complete the following steps:

➔ Follow the steps described in "Replacing the gear motor".

✓ The gear motor has been mounted.

➔ Tighten/adjust the conveyor belt

Complete the following steps:

➔ Follow the steps described in "Tensioning/adjusting the conveyor belt".

✓ The conveyor belt has been tensioned and adjusted.

✓ The flange bearings have been replaced.

Replacing the pulley

Tail pulley Ø 42

Requirements:

- ✓ Machine has been taken out of operation.
- ✓ Machine has been secured so that it cannot be switched on inadvertently.
- ✓ The conveyor belt has been loosened.

WARNING

Increased risk of accident!
The pulley may tip over and crush parts of the body.
➔ Secure the pulley to prevent it from dropping.
➔ Use hoists to lift the pulley on and off.

Complete the following steps:

1. Release the joining element (2) on both sides.

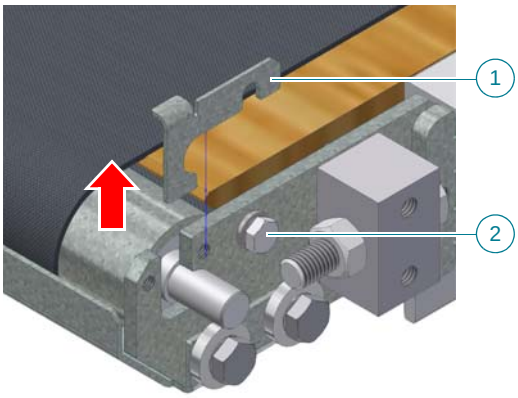

2. Remove the sheet (2) on both sides.
3. Pull out the pulley lengthwise, take it out of the belt loop and remove it.
4. Assembly must be carried out in the reverse order.

✓ Tail pulley Ø 42 has been replaced.

Tail pulley Ø 65

Requirements:

- ✓ Machine has been taken out of operation.
- ✓ Machine has been secured so that it cannot be switched on inadvertently.
- ✓ The conveyor belt has been loosened.

WARNING

Increased risk of accident!
The pulley may tip over and crush parts of the body.
➔ Secure the pulley to prevent it from dropping.
➔ Use hoists to lift the pulley on and off.

Complete the following steps:

1. Release the joining element (2) on both sides.

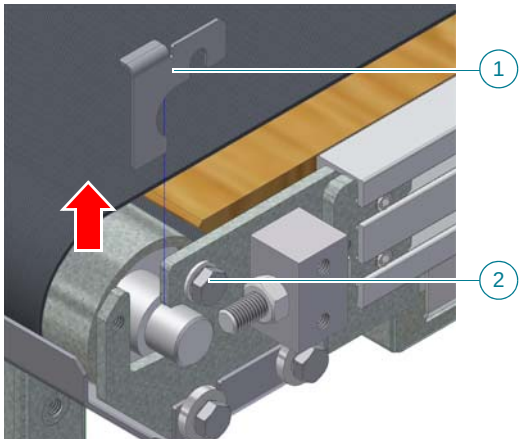

2. Disassemble the locking plate (2) on both sides.
3. Pull out the pulley lengthwise, take it out of the belt loop and remove it.
4. Assembly must be carried out in the reverse order.

✓ Tail pulley Ø 65 has been replaced.

Tail pulley/transfer drive Ø 80

The following steps apply to the transfer drive pulleys of the pre-conveyor and conveyor gate.

Requirements:

- ✓ Machine has been taken out of operation.
- ✓ Machine has been secured so that it cannot be switched on inadvertently.
- ✓ The conveyor belt has been loosened.

WARNING

Increased risk of accident!
The pulley may tip over and crush parts of the body.
➔ Secure the pulley to prevent it from dropping.
➔ Use hoists to lift the pulley on and off.

Complete the following steps:

1. Remove the protection cap (5) on both sides.
2. Undo the grub screws (4) on both sides.

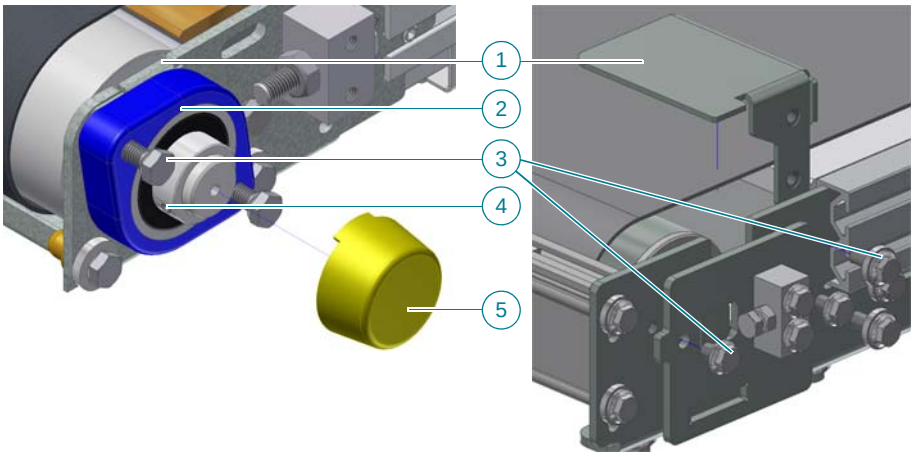

3. Remove the joining elements (3) on both sides.
4. Pull the flange bearings (2) off the shaft journal.
5. Remove the slot covers (1).
6. Pull the pulley upwards and, take it out of the belt loop and remove it.
7. Assembly must be carried out in the reverse order.

✓ Tail pulley Ø 80 has been replaced.

Replacing the drive pulley

Complete the following steps:

➔ Follow the steps described in the "Replacing the conveyor belt" section.

✓ The drive pulley has been replaced.

Replacing a roller - apex bend

The illustration shows an apex bend with one pulley. For apex bends with a larger angle, several rollers are installed in a row.

Requirements:

- ✓ Machine has been taken out of operation.
- ✓ Machine has been secured so that it cannot be switched on inadvertently.
- ✓ The conveyor belt has been loosened.

➔ Disassemble the roller

Complete the following steps:

1. Remove the finger guard inserts (1).

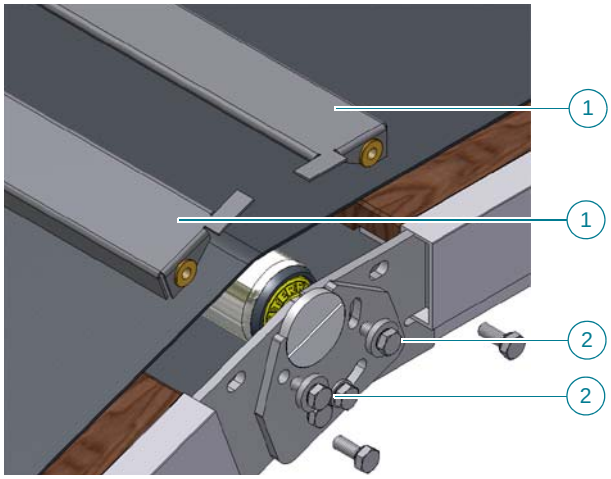

2. Remove the joining elements (2) for clamping the eccentric.

3. Pull out the eccentric (3) on both sides.

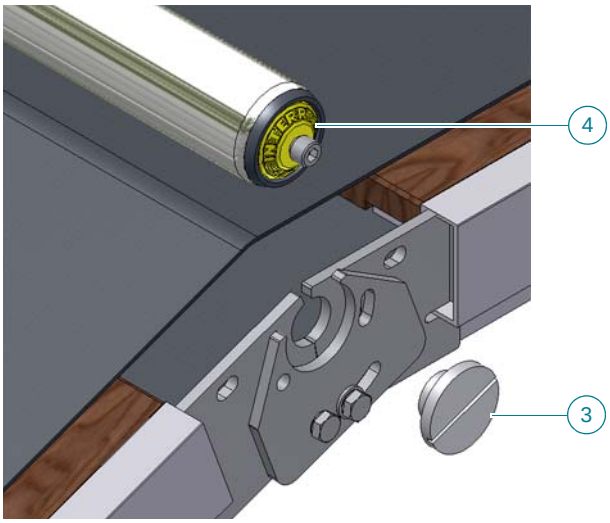

4. Remove the roller (4).

✓ The roller has been removed.

➔ Assemble the roller

Complete the following steps:

➔ Assembly is carried out in reverse order.

✓ The roller has been assembled.

➔ Adjust the roller

Complete the following steps:

1. Follow the steps described in "Tensioning/adjusting the conveyor belt".
2. Release the clamping screws (1).

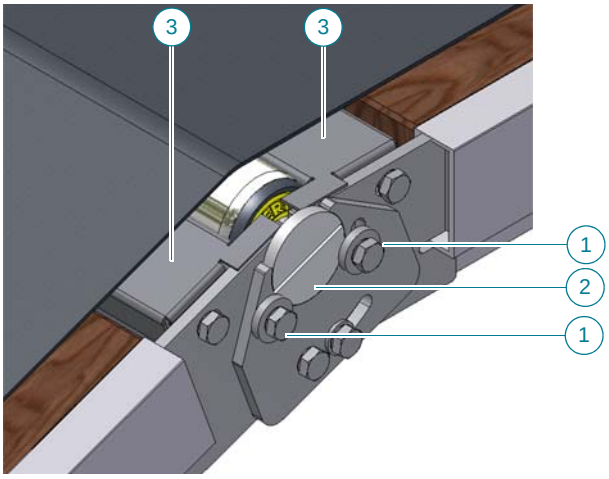

3. Adjust the height of the roller by turning the eccentric (2).
   ↳ If required, the eccentric bushes may be adjusted differently to adjust the belt.
4. If necessary, adjust the finger guard inserts (3) at the side.
5. Tighten the clamping screws.
   ✓ The roller has been adjusted.

✓ The roller has been replaced - apex bend.

Replacing rollers - roller arch

Requirements:

- ✓ Machine has been taken out of operation.
- ✓ Machine has been secured so that it cannot be switched on inadvertently.
- ✓ The conveyor belt has been loosened.

➔ Disassemble the rollers

WARNING

Increased risk of accident!
Rollers may tilt and crush parts of the body.
➔ Secure the rollers to prevent them from dropping.
➔ Use hoists to lift the rollers on and off.

Complete the following steps:

1. Remove the joining elements (1) on both sides.

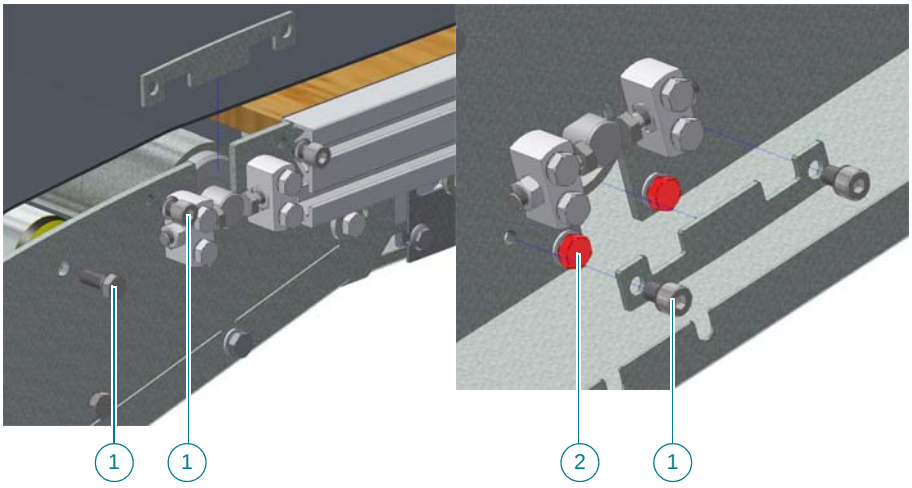

2. Undo joining elements (2) where applicable on both sides. Remove cover.
3. Remove the rollers.

✓ The rollers have been disassembled.

➔ Assemble the rollers

Complete the following steps:

➔ Assembly is carried out in reverse order.

✓ The rollers have been assembled.

➔ Adjust the rollers

Complete the following steps:

1. Follow the steps described in "Tensioning/adjusting the conveyor belt".
2. Undo the counter nuts (1).

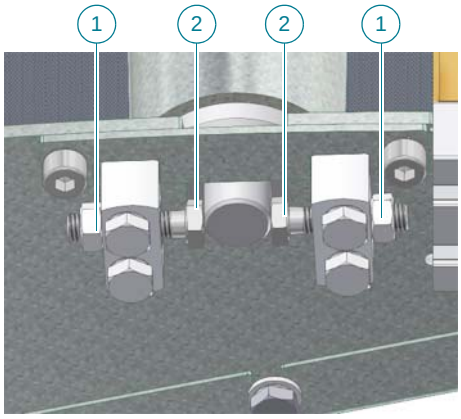

3. Turn the tensioning screws (2) to adjust the rollers.
   ↳ The belt will have a delayed response to the adjustment. Therefore, only adjust the tensioning screws slightly. Allow the belt to run for a few cycles before each adjustment.
4. Tighten the counter nuts (1).

✓ The rollers have been adjusted.

✓ The roller has been replaced - roller arch.

Repairing the pre-conveyor/conveyor gate

Requirements:

- ✓ Machine has been taken out of operation.
- ✓ Machine has been secured to prevent it from being switched on inadvertently.

➔ Repair the transfer drive

Complete the following steps:

1. Remove the cover (1).

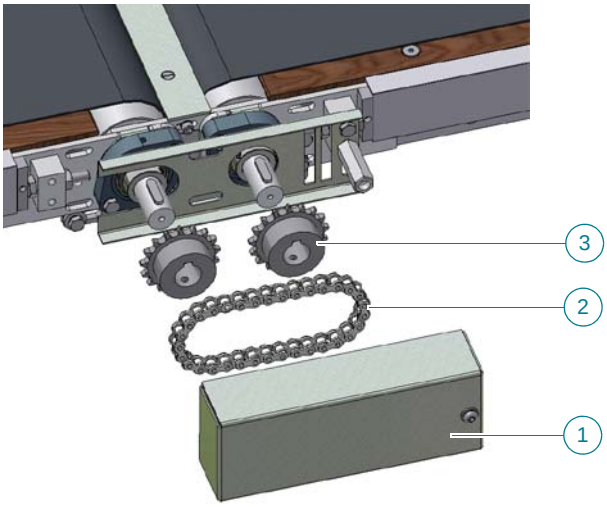

2. Open the chain coupling and remove the chain (2).
3. Remove the chain wheels (3) from the shaft journal.
4. Replace defective parts.
5. Assembly must be carried out in the reverse order.

✓ The transfer drive has been repaired.

➔ Disassemble the conveyor gate/pre-conveyor

WARNING

Increased risk of accident!
The conveyor may fall and crush parts of the body.
➔ Support the conveyor gate/pre-conveyor with a hand lift truck.

WARNING

Risk of injury caused by gas pressure spring!
A pressurised gas pressure spring may exert strong impact forces on parts of the body.
➔ Never disassemble a retracted gas pressure spring.
➔ Position the conveyor gate vertically and secure it.

Complete the following steps:

1. Only for conveyor gate: Move the conveyor gate to vertical position and remove the attachment bolt (1) of the gas pressure spring (2).

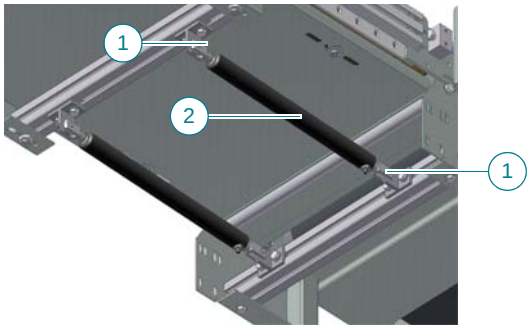

2. Support the conveyor gate/pre-conveyor in horizontal position with suitable equipment.

3. Only for pre-conveyor: Remove the finger guard (3).

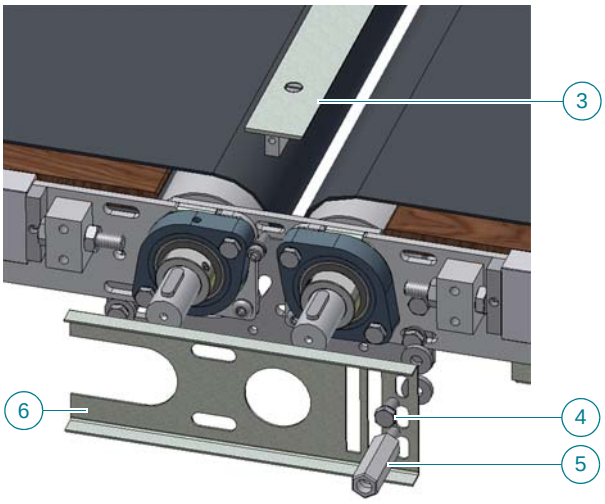

4. Remove the joining elements (4) and stud bolt (5).
5. Remove the rear cover (6).
6. Remove the joining elements (7), (8) on both sides.

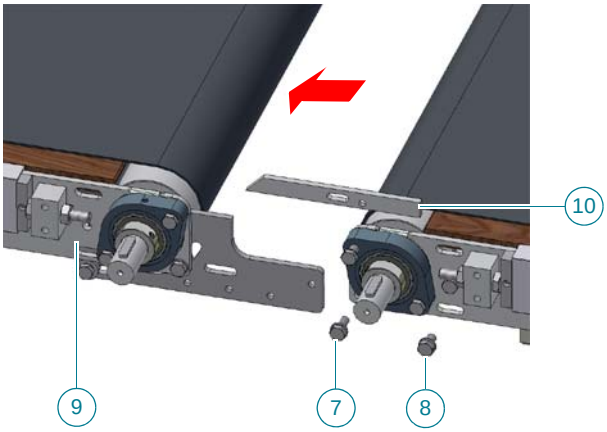

7. Separate the pre-conveyor/conveyor gate (9) from the main track in a longitudinal direction.
8. If necessary, remove the support (10).
9. Assembly must be carried out in the reverse order.

✓ The pre-conveyor/conveyor gate has been disassembled.

✓ The pre-conveyor/conveyor gate has been repaired.

Troubleshooting

This section informs you what to do if a malfunction occurs. A malfunction that has been detected can have various different causes.

Please refer to the "Maintenance and repair" section for instructions on fault clearance provided it that may be carried out by technical personnel as indicated. Please ensure full compliance with the safety instructions in each section.

What to do if...

Mechanical malfunctions

Fault identified	Possible cause	Remedial action
Machine shuts down	Power supply disrupted, error message displayed	Have technical personnel establish the cause and eliminate the problem
	Motor defect	Replace motor
Machine shutdown with running motor	Pulley journal is broken	Replace corresponding pulley
	Belt tension is too low	Tension and adjust belt
Belt movement jerky	Belt tension is too low	Tension and adjust belt
	Belt is blocked by foreign objects	Remove foreign objects
Belt bulges	Belt overstretched or incorrectly tensioned	Tighten and adjust belt, if necessary replace belt
Belt generates grinding noise	Belt rubbing on edges of the bed	Tighten and adjust belt
		Align bed
		Realign drive pulley/tail pulley
Noise development/leakage at pulley bearings	Pulley journal is turning in internal ring of bearing Bearing defective	Replace bearing, replace pulley if necessary

Motor and gear

Should a drive motor malfunction occur, please refer to the operating instructions of the motor manufacturer for information on fault clearance.

The operating instructions for the motor are an integral part of the system.

Decommissioning and waste disposal

Machine disposal

Please comply with local regulations on waste disposal when disposing of the entire machine or parts of it. The regulations will tell you if the machine has to be dismantled for disposal, and to what extent, and how the individual components can be supplied for recycling.

Also observe the instructions for information regarding the individual components of the machine.

Complete the following steps:

1. Put the machine out of operation and disconnect from electrical power supply.
2. Drain and dispose of all consumable materials.
3. Dismantle the machine according to the guidelines and regulations valid in the country of use.

✓ The machine has been disposed of.

Main components of the machine

The following table provides information on the different construction materials generally found in machine's main components.
Actual materials may vary depending on the individual design.

Main components of the machine

Machine parts	Material
Cover	Aluminium plate Steel plate
Bed	Wood Polyethylene (PE) (Stainless) steel
Drive belt, conveyor belt	Polyurethane (PUR) Polyvinyl chloride (PVC)
Conveyor roller	Plastic Steel
Gear motor	Cast iron Copper Steel
Base frame, support	Aluminium Steel
Pulley	Steel Polyurethane (PUR) coated steel

Contact details

In the event of uncertainty or problems during installation, maintenance, repair or operation of the machine, please first consult the corresponding section of the operating instructions.
If this information does not solve your problem, please contact TRANS-NORM SYSTEM GmbH.

Head office

Germany

TRANSNORM SYSTEM GmbH

Förster Str. 2

D-31177 Harsum

Tel.: +49 (0) 5127 4020

Fax: +49 (0) 5127 4400

E-mail: info@transnorm.de
Web:http://www.transnorm.com

Subsidiaries, branch offices and sales partners worldwide

Subsidiaries

United Kingdom	USA
TRANSNORM SYSTEM Ltd.	TRANSNORM SYSTEM Inc.
Unit 2, Bredon Court Brockeridge Park, Twyning, Tewkesbury	2810 Avenue E East
Gloucestershire GL20 6FF	76011 Arlington, Texas
+44 (0) 16 84 29 11 00	+1 (0) 97 26 06 03 03
Fax: +44 (0) 16 84 29 15 50	Fax: +1 (0) 97 26 06 07 68
E-mail: sales@transnorm.co.uk	E-mail: sales@transnorm.com

Thailand	Malaysia
TRANSNORM SYSTEM Co. Ltd.	TRANSNORM SYSTEM Sdn. Bhd
222/1-4 Moo 5 Ban Rakat Sub-District, Bang Bo District	7, Jalan 1/5 Taman Kluang Indah
10560 Samut Prakan Province	86000 Kluang Johor Darul Takzim
Tel.: +66 (0) 20 30 98 20	Tel.: +60 (0) 77 77 19 17
Fax: +66 (0) 20 30 98 49	Fax: +60 (0) 77 77 19 28
E-mail: sales@transnorm.asia	E-mail: info@transnorm.com.my

China
TRANSNORM SYSTEM (SHANGHAI) CO., Ltd.
Shangcheng RD 738 Room 1004
2001120 Shanghai, China
Tel.: +86 (021) 61 62 55 60
Fax: +86 (021) 61 62 55 63
E-mail: sales@transnorm.asia

Branches

Netherlands	France
TRANSNORM SYSTEM GmbH	TRANSNORM SYSTEM GmbH
Sales Unit Benelux	Bureau France Bâtiment B - Paris Nord 2
Grachtweg 23B	69, Rue de la Belle Etoile
4301 KJ Zierikzee	95940 Roissy Charles de Gaulle Cedex
Tel.: +31 (0) 1 11 41 00 90	Tel.: +33 (0) 1 48 63 70 61
Fax: +31 (0) 1 11 45 12 88	Fax: +33 (0) 1 48 63 05 62
E-mail: sales.nl@transnorm.de	E-mail: eric.cornec@transnorm.de

Sales partners

Denmark	Switzerland
Nerak A/S.	Frei Fördertechnik AG
Christian 8.s Vej 32	Schwarzbachstraße 26
8600 Silkeborg	3113 Rubigen
Tel.: +45 (0) 70 26 50 04	Tel.: +41 (0) 3 17 20 56 56
Fax: +45 (0) 70 23 50 04	Fax: +41 (0) 3 17 20 56 55
E-mail: nerak@email.dk	E-mail: info@ffag.ch

Spain	United Arab Emirates
J. Hernando	SVS Engineering Services (L.L.C.)
c/ Iplacea n°6 Poligono Industrial Las Matillas	P.O. Box 251755
28803 Alcalá de Henares (Madrid)	Dubai
Tel.: +34 (0) 9 18 79 62 86	Tel.: +971 (0) 42 38 25 33
Fax: +34 (0) 9 18 79 78 70	Fax: +971 (0) 65 45 63 65
E-mail: info@jhernando.com	E-mail: svsengg@emirates.net.ae

Service branches - Germany

Service branch - North	Service branch - Central
Manfred Fernandez	Frank Bernutz
Tel.: 0 41 82 / 28 53 99	Tel.: 0 50 31 / 9 02 03 20
Mobile: 01 72 / 51 00 976	Mobile: 01 72 / 43 82 507
Fax: 0 41 82 / 28 55 52	Fax: 0 50 31 / 9 02 03 21

Service branch - West	Service branch - South
Saverio Gadaleta	Marko Kilank
Tel.: 0 21 73 / 93 82 48	Tel.: 0 71 43 / 96 46 68
Mobile: 01 72 / 97 12 877	Mobile: 01 72 / 43 82 446
Fax: 0 21 73 / 93 82 76	Fax: 0 71 43 / 96 58 51

Suggestions and information

...on this documentation or the machine should be sent to the first address listed above.

Other ManualsLib Projects

www.manualslib.com

www.manualslib.de

www.manualslib.es

www.manualslib.fr

www.manualslib.nl

www.manualslib.mx

www.manualslib.tech 30+ Languages