Manualslib.com - The Global Manuals Library

TRANSNORM TS 1600-105FH2 OPERATING INSTRUCTIONS MANUAL

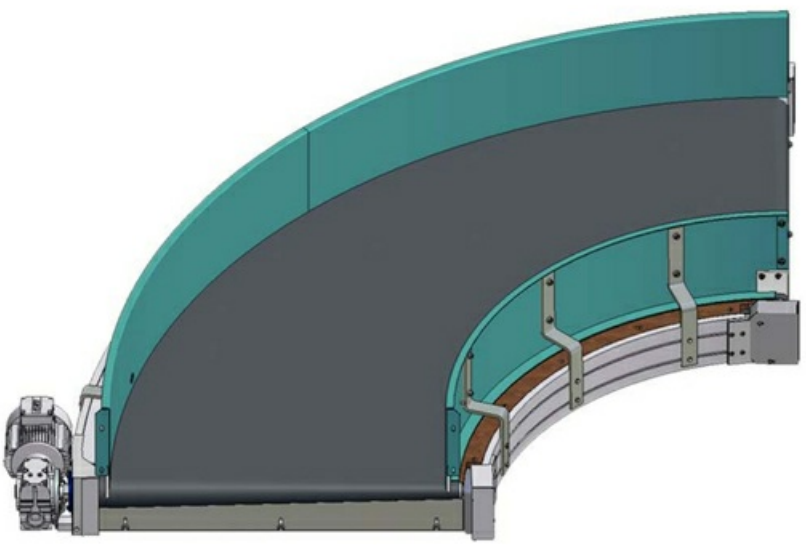

Quick Links

Technical Description
Machine Parts
Ts 1600-105Fh2 45° up to 90
Maintenance and Care

Table of Contents

Table of Contents
Applicable documents
EC Declaration of Incorporation
Introduction
Purpose of the document
Validity
Illustrations
Using the instructions
Safety instructions
Copyright Protection
Service
Warranty
Safety
Operating conditions
Intended use
Impermissible operating conditions
Responsibilities of the operating company / integrator
Safety equipment
Staff qualifications
Remaining risks regarding the machine
Remaining risks for operating personnel
Remaining risks for technical personnel
Description
Technical description
Main dimensions
Technical data
Machine areas
Machine parts
Optional machine equipment
Transportation and erection

Delivery of the machine
Unpacking the machine
A longer storage period of the machine
Disposing of Packaging Material
Installing the machine
Ground requirements
Tolerable operating conditions
Transport within the company
Auxiliary equipment
Transportation with industrial truck or crane
TS 1600-105FH2 up to 45
TS 1600-105FH2 45° up to 90
TS 1600-105FH2 more than 90
Final assembly on site
Assembly
Carrying out Installation
Mount side guides
Electrical connection
Operation
Commissioning
Commissioning and start-up after service and maintenance works
Normal operation
Shutdown
Maintenance and care
Maintenance works
Motor maintenance
Gear unit maintenance
Lubricants
Maintenance plan
Cleaning and care
Repairs
Spare part purchasing

Work tools
Tightening torques
Guards
Replacing a side guide
Belt exchange, standard
Belt exchange, alternative
Tensioning/adjusting belt
Replacing the gear motor
Shaft-mounted bevel wheel gear
Shaft-mounted worm gear
Shaft-mounted bevel wheel gear
In case of chain drive / toothed belt drive
Replace chain drive / toothed belt drive
Replacement of flange/pedestal bearing
Replacing drive pulley
Replacing tail pulley
Replace belt edge holders
Fault clearance
What to do if
Motor and gear
Decommissioning and waste disposal
Machine disposal
Main components of the machine
Contact details
Head office
Subsidiaries, branch offices and sales partners worldwide
Service branches - Germany
Suggestions and information
Other ManualsLib Projects

transnorm
your best move

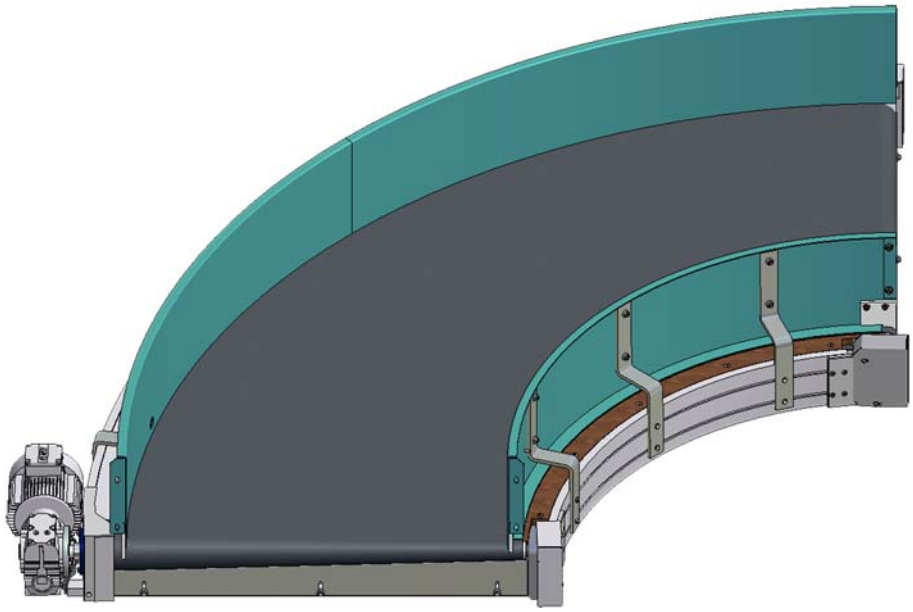

TS 1600-105FH2
Curve belt conveyor

Operating instructions

Product	Curve belt conveyor TS 1600-105FH2
Manufacturer	TRANSNORM SYSTEM GmbH Förster Str. 2 D-31177 Harsum Tel. +49 (0) 5127 4020 Fax +49 (0) 5127 4400 info@transnorm.de http://www.transnorm.com
Documentation	Operating instructions - TRANSLATION - Version 5.3 ENG, 16.02.2017 Subject to technical alteration. All rights reserved by TRANSNORM SYSTEM GmbH. Reprint and duplications only with written approval.

Revision

V 3.0	Initial version
V 3.1	EC declaration of conformity updated
V 3.2	Applicable documents replaced
V 4.0	Revised according to Machinery Directive 2006/42/EC
V 4.1	Transport and installation revised
V 4.2	Corrective maintenance updated
V 4.3	Corrective belt exchange updated
V 5.0	Product name revised
V 5.1	Remaining risks, safety instructions and Introduction revised
V 5.2	Corrective maintenance updated
V 5.3	Safety instructions added

Contents

Applicable documents 7
EC Declaration of Incorporation 7

Introduction 9
Purpose of the document 9
- Validity 9
- Illustrations 9

Using the instructions 10
Safety instructions 11
Copyright Protection 12
Service 12
Warranty 13

Safety 15
Operating conditions 15
- Intended use 15
- Impermissible operating conditions 16
- Responsibilities of the operating company / integrator 16

Safety equipment 18
Staff qualifications 19
Remaining risks regarding the machine 21
- Remaining risks for operating personnel 21
- Remaining risks for technical personnel 22

Description 25
Technical description 25
Main dimensions 26
Technical data 27
Machine areas 29
Machine parts 30
Optional machine equipment 31

Transportation and erection 33
Delivery of the machine 33
- Unpacking the machine 33
- A longer storage period of the machine 33
- Disposing of Packaging Material 34

Installing the machine 34
- Ground requirements 34
- Tolerable operating conditions 34

Transport within the company 35
- Auxiliary equipment 36

Transportation with industrial truck or crane 38
- TS 1600-105FH2 up to 45° 38
- TS 1600-105FH2 45° up to 90° 39
- TS 1600-105FH2 more than 90° 40

Final assembly on site 41
- Assembly 41
- Carrying out Installation 42
- Mount side guides 45
- Electrical connection 46

Operation 47
Commissioning 47
Commissioning and start-up after service and maintenance works 47
Normal operation 50
Shutdown 50

Maintenance and care 51
Maintenance works 51
- Motor maintenance 51
- Gear unit maintenance 51

Lubricants 52
Maintenance plan 52
Cleaning and care 54

Repairs 55
Spare part purchasing 55
Work tools 55
Tightening torques 56
Guards 57
Replacing a side guide 58
Belt exchange, standard 61
Belt exchange, alternative 69
Tensioning/adjusting belt 77
Replacing the gear motor 81
- Shaft-mounted bevel wheel gear 81
- Shaft-mounted worm gear 83
- Shaft-mounted bevel wheel gear 85
- In case of chain drive / toothed belt drive 87

Replace chain drive / toothed belt drive 89
Replacement of flange/pedestal bearing 90
Replacing drive pulley 93
Replacing tail pulley 100
Replace belt edge holders 106

Fault clearance 109
What to do if... 109
Motor and gear 110

Decommissioning and waste disposal 111
Machine disposal 111
Main components of the machine 112

Contact details 113
Head office 113
Subsidiaries, branch offices and sales partners worldwide 114
Service branches - Germany 116
Suggestions and information 116

Applicable documents

EC Declaration of Incorporation

transnorm
your best move

-TRANSLATION-

EC-Declaration of Incorporation

as per EC Machinery Directive 2006/42/EG, Annex II B

Manufacturer: TRANSNORM SYSTEM GmbH
Förster Str. 2 • D-31177 Harsum

Herewith we declare, that the partly completed machinery described below

Machinery denomination: Curve Belt Conveyor

TRANSNORM Machine model: TS 1600-105FH2

is complying with the following requirements of the Machinery Directive 2006/42/EC:

1.1.1 – 1.1.3 / 1.1.5 / 1.3.1 – 1.3.4 / 1.3.6 – 1.3.8.1 / 1.3.9 / 1.4.1 / 1.4.2.1 / 1.5.1 – 1.5.6 / 1.5.8 / 1.5.9 / 1.6.1 – 1.6.4 / 1.7 [3.1.1 / 3.4.1]

Additional we declare that the relevant technical documentation is compiled in accordance with part B of Annex VII.

EC-Guidelines observed:

2006/42/EC „Machinery Directive"	Directive of the European Parliament and Council dated 17 May 2006 for the harmonisation of laws and administrative regulations of the Member States for machinery.
2014/30/EU „Directive relating to electro-magnetic compatibility (EMC)"	Council Directive dated 26 February 2014 on the harmonisation of laws of the Member States relating to electromagnetic compatibility.

The safety objectives of the Directive 2014/35/EU relating to electrical equipment are observed according to Annex I, no. 1.5.1 of the Machinery Directive 2006/42/EC.

The partly completed machinery must not be put into service until the final machinery into which it is to be incorporated has been declared in conformity with the provisions of Directive 2006/42/EC on Machinery, where appropriate, and until the EC Declaration of Conformity according to Annex II A is issued. In the event of a change to the partly completed machinery which has not been prearranged, this declaration will no longer be valid.

We commit to transmit, in response to a reasoned request by the market surveillance authorities, relevant documents on the partly completed machinery.

Harsum, 2016-10-11

Authorised for documentation:
Tillmann Eid
Förster Str. 2
D-31177 Harsum

Dr. Kai Ventz
- Director of Technology and Innovation -

TRANSNORM SYSTEM GmbH
Förster Straße 2
D-31177 Harsum
info@transnorm.de
www.transnorm.com

Telefon +49 5127 402-0
Telefax +49 5127 44 00
UST-ID/VAT DE 162570077

Handelsregister
Hildesheim HRB 210
Gerichtsstand Hildesheim
Geschäftsführer
Sidy Diop, Georg Waldmüller

Commerzbank Hildesheim
BIC COBADEFFXXX
IBAN DE 2825 9400 3302 1768 5700

Deutsche Bank Hildesheim
BIC DEUTDE2H259
IBAN DE 2825 9700 7400 1230 0000

Introduction

Purpose of the document

These operating instructions enable you to safely operate the delivered machine, defined as partly completed machinery by the EC Machinery Directive, in accordance with its intended use.
Read through these instructions carefully before commissioning the machine. For further technical information, please refer to the order confirmation supplied separately.

You will find information on the following topics in the sections below:

- The safe handling of the machine
- Technical specifications
- Transporting, installing and putting the machine into operation
- Maintenance instructions
- Repairing the machine
- Fault detection and correction
- Taking the machine out of operation and disposal

Validity

These operating instructions apply to the operating company/integrator and all persons working on or with the machine.

Illustrations

The illustrations show simplified views of the machine.
We reserve the right to carry out technical alterations in case of further developments. If assembly is not described, it will be carried out in exactly the opposite order to disassembly.

Due to the numerous possible system configurations of our machines, details shown in the illustrations may differ from the machine supplied.
See the order confirmation for an exact description
of your specific machine.

Using the instructions

Different circumstances are indicated using specific text/formulations. Important information has also been marked with additional symbols. The following is an overview of the different ways information is formulated.

➔ This is a single, complete step.

1. This is the first step in a series of actions.

↳ This is a useful remark on a specific step.

? *This is a problem that may arise.*
This is the cause of the problem.
➔ This is a measure to solve the problem.

✓ You have completed a series of actions.

✓ You have completed the entire activity.

This is a notice.
Notices provide additional information.

Safety instructions

Safety instructions warn of risks and remaining risks and offer information on how to prevent them.

The signal words CAUTION, WARNING and DANGER indicate the level of severity of the risk.
The following overview explains the safety instructions used in this document.

DANGER

This notice warns of risk of death or fatal injury
This states the cause of the danger.
➔ You must take this action to avert the danger.

WARNING

This notice warns of moderate or minor injury
This states the cause of the danger.
➔ You must take this action to avert the danger.

CAUTION

This notice warns of damage to materials or to the machine
This states the cause of the danger.
➔ You must take this action to avert the danger.

Copyright Protection

This publication must be treated as strictly confidential. It is intended only for internal use by an authorised group of persons. and must not be disclosed to third parties without the written approval of TRANSNORM SYSTEM GmbH.

All documents are protected within the meaning of the Copyright Protection Act. The transfer and duplication of documents, also by way of extract, is strictly prohibited. Non-compliance shall be prosecuted and subject to the payment of compensation.

Service

Our service is available for technical information on our products and their systematic application.

Please have the following information ready when contacting us with queries or spare parts orders:

- Machine type
- Order/project number
- Item number

You will find this information on the type identification plate of your machine. It is located in the vicinity of the drive unit.

TRANSNORM SYSTEM GmbH type identification plate, sample

You will find our contact data at the back of these operating instructions.

Warranty

We shall accept no responsibility for any defects or damage caused by inappropriate use, operating errors or incorrect servicing and maintenance. We expressly point out that only original spare parts and accessories approved by TRANSNORM SYSTEM GmbH may be used.

Unless otherwise stipulated in the contract, the warranty period begins on the day of delivery or with notification of readiness to deliver.

Please file all claims under warranty immediately upon identifying the defect/s. Please quote the order (project) and item number when making a claim.

The warranty shall be in line with statutory regulations. Further claims are excluded.

Please note that the warranty shall be rendered null and void in the case of:

- Use not in accordance with the intended purpose
- Improper connecting and preparatory work not included within our scope of service
- Improper use of controls
- Failure to use original spare parts and accessories
- Conversions or structural modifications which have not been authorised by us in writing

Wearing parts are generally excluded from the terms of warranty

.

Safety

Operating conditions

The conveyor, subsequently referred to as the machine, is an incomplete machine as defined by the EC Machinery Directive. The machine has been designed according to the state of the art.

Nevertheless, there may be dangers arising from the machine under the following circumstances:

- Improper use
- Improper use
- Impermissible operating conditions
- Failure to comply with these installation and operating instructions
- Failure to comply with the general safety regulations during transport and installation

Intended use

The machine shown on the front page is intended for the transport of unit loads in compliance with the performance specification only and is intended for incorporation into a fully automatic intralogistic system with superordinate control.

Any use other than this is classed as improper use and is forbidden.

We point out explicitly that the machine is not designed for transporting human beings.

It may only be used in a protected industrial environment with restricted access.

The manufacturer accepts no liability for damage arising from improper use of the machine.

Impermissible operating conditions

Do not operate the machine under the following conditions:

- While there are people or objects in the danger zones
- Safety devices are not working or have been removed
- The machine is malfunctioning or damaged
- Maintenance intervals have been exceeded
- Operating parameters have been changed without authorisation

Responsibilities of the operating company / integrator

The machine safety can only be guaranteed if all required measures are taken. The operating company/integrator is responsible for planning and implementing appropriate measures.

These operating instructions are part of the machine. You are obligated to pass on this document to the buyer of the machine should it be sold.

The operating company/integrator of the machine is responsible for its safety. This applies especially to:

- The installation to form a complete machine with functioning and compliant safety devices.
- The incorporation of the machine in such a way that no additional danger/hazards are created.
- the physical inviolability of all people working near the machine
- Fault-free operation of the machine.

Minimising the danger of injury

Take steps to guarantee the safety of persons in the vicinity of the machine, for example:

- Ensure that all work on the machine is carried out by qualified and authorised personnel.
- Make sure all operators are familiar with the safety devices.
- Ensure the machine and its surroundings are always tidy and clean.
- Provide safety equipment for operating personnel. Make sure the protective clothing is worn.
- Provide instructions for procedures and behaviour in the case of disturbances.
- Clarify questions regarding occupational health and safety and protection of the environment.

Fault-free operation of the machine

Implement the following measures to ensure trouble-free operation of the machine:

- Always keep the complete operating instructions legible, handy and close to the machine so that it is available to personnel at all times.
- Only operate the machine when fully functional.
- Check the machine and its safety equipment regularly to ensure that they are fully functional.

Carrying out installation layout

Observe the following basic safety principles when connecting several separate components to form an overall system:

- Install isolating safety devices in areas of pulleys, apex bends, roller arches, conveyor gates and transfer drives.
- In the vicinity of a transfer drive or a conveyor gate, the belt must have the same speed or run faster in the outfeed area than in the infeed area.
- The national safety regulations valid in the country of use as well as additional sector-specific requirements shall apply.

Commissioning

This conveyor system is a "partly completed" machinery, as defined by the Machinery Directive 2006/42/EC, Article 2g. Only the use of a respective control system and if necessary other (partly completed) machinery allows for intralogistic functionality. It must not be commissioned until it has been ascertained that the partly completed machinery which is the subject of this documentation or the machinery into which it is incorporated comply with the requirements of the Machinery Directive.

Safety equipment

The machine is equipped with various covers to protect parts of the body from crush injuries or being drawn in. This safety equipment is listed below.

It is explicitly prohibited to render protective devices unusable, to by-pass or remove them. They may only be taken off temporarily during maintenance or repair work.

If the purchasing contract specifies that certain safety equipment is not included in the sale, the operating company/integrator must perform an evaluation of the danger areas according to the Machinery Directive. In case that additional guards are required, especially on nip points and transfer sections, these need to be provided in accordance with the respective current national regulations and standards.

For ceiling suspension of the machine without side guides installed, safety equipment must be provided in accordance with the respective current national regulations and standards, to prevent harm to personnel.

For data regarding inspection intervals please see the maintenance plan.

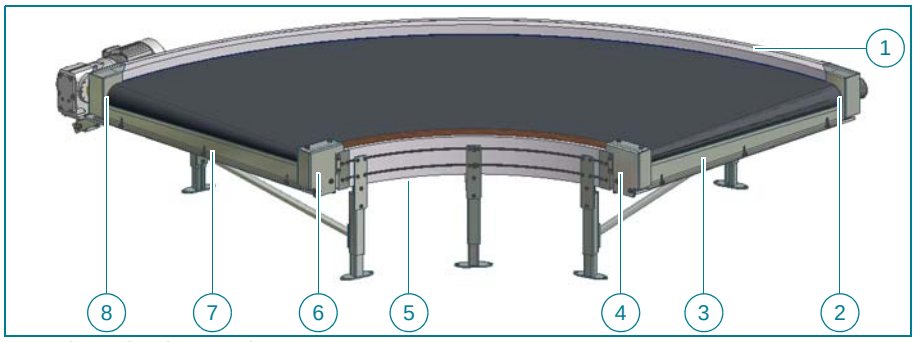

Overview of safety equipment

Safety equipment on the TS 1600-105FH2 curve belt conveyor

Item	Description
1	Finger guard
2	Finger guard insert
3	Finger guard plate, outfeed side
4	Bearing cover
5	Bottom cover
6	Bearing cover
7	Finger guard plate, infeed side
8	Finger guard insert

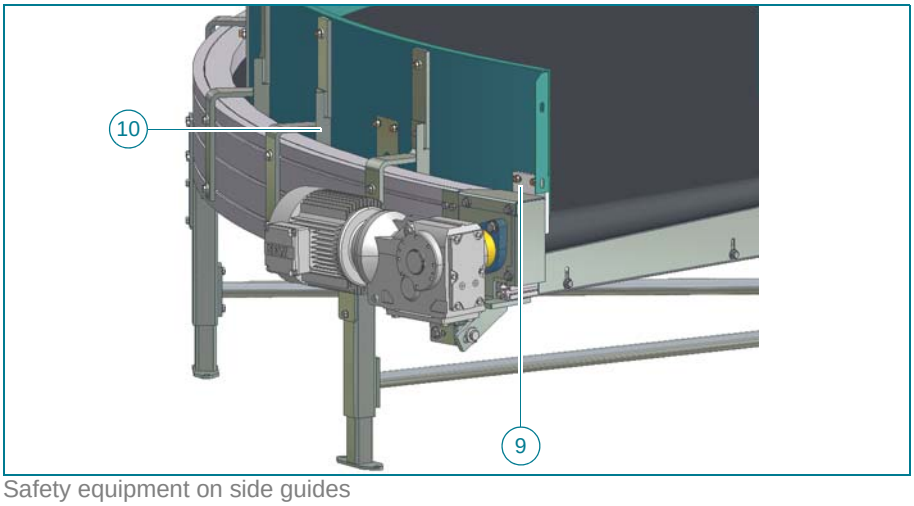

Safety equipment on side guides

Safety equipment on the TS 1600-105FH2 curve belt conveyor

Item	Description
9	finger guard, side guide
10	finger guard, side guide

Staff qualifications

Assembly, maintenance and repair works as well as the commissioning demand special knowledge and qualifications of the staff involved.

We recommend to work with personnel trained and authorised by TRANS-NORM SYSTEM GmbH only.

Every member of staff working on the machine must meet the following requirements:

- must be suitable for the required work and sufficiently qualified
- must be instructed in the handling of the machine
- must be familiar with the safety arrangements
- must have read and understood these operating instructions and especially the relevant chapters regarding his work
- must be familiar with the basic regulations regarding occupational health and safety as well as the rules for accident prevention and branch-specific regulations

These operating instructions differentiate between the following person groups:

Definition of the groups of persons

Person groups	Definition
User	Considered as the operating company is the company that uses the machine in compliance with the law and that operates it with suitable and instructed members of staff
Integrator	The integrator installs the partly completed machinery for the operating company and integrates it into a system of machines with a master controller and safety technology. (Responsible for ensuring conformity of the overall system)
Operating personnel	Appropriately instructed by the user in ▪ Operation sequences of the machine ▪ Operational courses ▪ Possible dangers in case of misuse ▪ Safety arrangements and measures
Specialised staff	Specialised qualification and authorised by the user to carry out special tasks such as assembly, maintenance and fault clearance. Preconditioned is a respective training in both theoretical and practical experience.

The following work is to be carried out by specialised personnel only:

Works requesting specialised knowledge

Activities	Definition
Works on pneumatic components	Specialised knowledge and experience in the handling of pneumatics
Works on electrical components	Electrical technician. Or: Instruction. The work may be carried out under the supervision of an electrical technician in accordance with the rules and regulations for electrical engineering

Remaining risks regarding the machine

The machine's protective devices offer protection against injury.
However, for some special tasks it is unavoidable to enter the danger zone.
Therefore, an element of risk always remains.

Remaining risks for operating personnel

The following table will enable the operating personnel to detect and avoid fundamental dangers and hazards. Professional conduct and implementation of the corresponding measures prevents remaining dangers.

Measures for operating personnel to avert risk and prevent damage

Danger	Cause	Measure
Risk of injury	Sharp-edged machine parts	During fault clearance: ▪ Be alert and proceed with caution ▪ Avoid hectic movements ▪ Wear appropriate protective clothing
	Rotating parts	During fault clearance: ▪ Do not reach into rotating parts ▪ Wear appropriate protective clothing ▪ Observe warning labels on the machine
	Hot electric motors	▪ Do not touch
	Incoming loads	Before remedying a fault: ▪ Watch the conveyor system carefully ▪ Assess whether the system needs to be stopped due to an unclear situation During remedying a fault: ▪ Keep limbs away from the conveyed loads ▪ Fix conveyed loads jam ▪ Only switch the system on again when conveyed loads jam is fixed
	Conveyed loads	During operation: ▪ Do not reach into conveyed loads ▪ Observe warning labels on the machine During remedying a fault: ▪ Assess whether the system needs to be stopped due to an unclear situation ▪ Secure system against accidental re-start, if necessary ▪ Be alert and proceed with caution
Damage to the environ-ment	Leaking operating fluids	During operation: ▪ Inform technical personnel/shift supervisor

Remaining risks for technical personnel

The following table is intended to help the technical personnel (responsible for installation, repairs or fault elimination) to detect and avoid fundamental dangers and hazards. Professional conduct and implementation of the corresponding measures prevents remaining dangers.

It is important to observe the instructions and safety instructions during installation works, maintenance works and repairs described in the corresponding sections. This is essential for works that require to remove protective devices.

Measures for technical personnel to avert risk and prevent damage

Danger	Cause	Measure
Risk of fatal injury	Accidental re-start of the machine	During maintenance / repair work: ▪ Inform your colleagues that it is prohibited to re-start the machine until notified otherwise ▪ Disrupt power supply ▪ Apply a label to prevent accidental re-connection of the power supply ▪ Prevent accidental re-connection of the power supply as described in the operating instructions of the system
	Electricity	For shut-down: ▪ Disrupt power supply ▪ Secure system against accidental re-start ▪ Measure that the power is off
	Falling or slipping of loads	Transport and installation: ▪ Observe the centre of gravity of the machine and the permissible lifting load of the hoists ▪ Secure the machine and hoists to prevent slipping ▪ Read chapter "Transport and installation" and carefully observe the instructions For conveying systems ceiling suspension: ▪ Observe the assembly instructions of the suspensions

Measures for technical personnel to avert risk and prevent damage

Danger	Cause	Measure
Risk of injury	Sharp-edged machine parts	During maintenance / repair work: ▪ Be alert and proceed with caution ▪ Avoid hectic movements ▪ Wear appropriate protective clothing
	Rotating parts	For maintenance and adjusting works: ▪ Do not reach into rotating parts ▪ Wear close fitting protective clothing ▪ Have one or more other persons assist you ▪ Observe warning labels on the machine
	Falling off machine parts	During maintenance / repair work: ▪ Support heavy parts (especially motors) ▪ Do not step under loose parts or touch them ▪ Secure working area so that personnel is not endangered For works at suspended machines: ▪ Cordon off the working area ▪ Have a second person supervise the operation ▪ Put tools and parts down carefully and prevent them from falling
	Hot electric motors	Before touching: ▪ Allow enough time for them to cool down ▪ Wear suitable and thick protective clothing
	Incoming loads	Before remedying a fault: ▪ Carefully observe conveyor system ▪ Assess whether the system needs to be stopped due to an unclear situation During remedying a fault: ▪ Keep limbs away from the conveyed loads ▪ Fix conveyed loads jam ▪ Only switch the system on again when conveyed loads jam is fixed
	Conveyed loads	During operation: ▪ Do not reach into conveyed loads ▪ Observe warning labels on the machine During remedying a fault: ▪ Assess whether the system needs to be stopped due to an unclear situation ▪ Secure system against accidental re-start, if necessary ▪ Be alert and proceed with caution During maintenance / repair work: ▪ Disrupt machine from electric supply during the works ▪ Secure system against accidental re-start

Measures for technical personnel to avert risk and prevent damage

Danger	Cause	Measure
Damage to the environ-ment	Leaking operating fluids	During disposal: ▪ Collect operating fluids in suitable containers. ▪ Dispose of waste oil, lubricating grease, cleaning agents containing solvents and similar products correctly

Description

The TS 1600-105FH2 has been optimised especially for flight baggage conveyor systems. Being the key component of the innovative curve family TS 1600, the TS 1600-105FH2 with a load capacity of up to 120 kg offers a wide operating spectrum for the internal transportation of packed and unpacked unit loads. The series 1600 combines peak values in capacity and reliability with an integral construction concept which minimises the effective space requirements of the conveyor within the installation layout and which simplifies the overall handling up to belt replacements. Due to the modular aluminium bolted construction of this key component it may easily be integrated into a great variety of various different conveyor systems.

Operation examples:

- Flight baggage handling systems
- Packaging lines
- Distribution centres in trade, the service sector and parcel services
- Printing and paper industry
- Dry processing in the food and pharmaceutical industry
- Original equipment manufacturer for machine- and plant constructions

Technical description

The basic design principle of the TS 1600-105FH2 curve belt conveyor is a conically cut belt which is levelled and driven by means of conical pulleys with an angle of wrap of approx. 180°. Due to the geometry of this arrangement, forces occur dragging the belt in the direction of the center point of the circle.

These forces are taken on by a combination of ball bearings in special holding devices and a belt edge sewn onto the belt and they are discharged into a specially grinded aluminium basic frame.

The drive pulley of the conveyor is coated and transfers the drive capacity over its entire length by friction. The required belt tension for a safe running cycle is ensured by adjustments of tail- and drive pulley inside the bearing blocks. Ideally, the required torque is applied via a shaft-mounted gear motor on the outer radius. Transfer drive solutions via chain and tooth belts and drives positioned on the inside radius are also possible.

This drive concept as well as the solution to take on forces via ball bearings and belt edge form the constructive basis and guarantee a calm, quiet and safe running cycle of the conveyor even at high speeds.

Main dimensions

Please take the measurements of your specific conveyor from the service specifications of your order confirmation. Custom-designed measurements are given as variables.

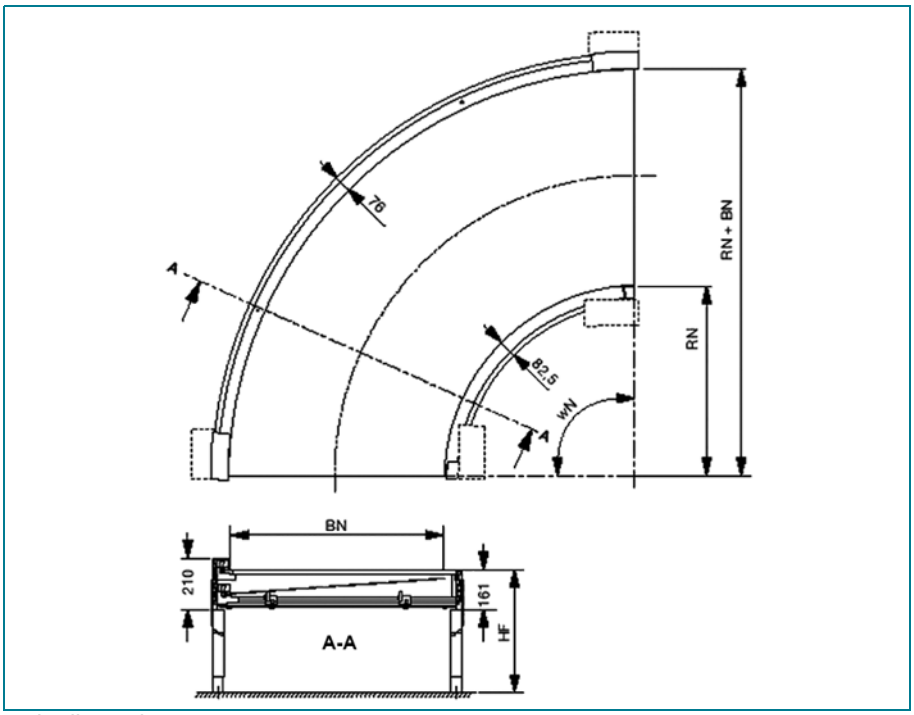

Main dimensions TS 1600-105FH2
top view. Main measurements are examples.

Used variables

Variable	Description
wN	Conveying angle / nominal angle
RN	Nominal radius / inside radius
BN	Nominal width
HF	Conveying height
BFLI	Nominal width

Different supports or suspensions than shown may be mounted (check service specifications).

Technical data

For the technical data regarding your specific machine, please refer to the service specifications of your order confirmation. The following refers to the general technical data of preference items.

Mechanical Data TS 1600-105FH2 Curve belt conveyor

Name	Data
Design versions	conveying angle (wN) / inside radius (RN) / nominal width (BN) / conveying height (HF): see service specifications
Nominal width (BN)	400 500 600 800 1,000 1,100 1,200 mm
Nominal radius/inside radius (RN)	600 900 1,000 1,200 1,500 mm
Conveying angle / nominal angle (wN)	30° 45° 60° 90° 135° 180°
Conveying height (HF)	min. 230 mm, with hanging motor arrangement 500 mm
Conveying direction (rF)	right / left (from centre point)
Drive position	right / left, inside / outside (from central point)
Basic frame	aluminium-bolted construction with bottom cover
Beading	Planboard combi plate, optional: sheet steel, galvanised or V2A-sheet metal
Drive and tail pulley	conical
Pulley diameter	100 mm on outer radius
Conveyor belt type (YG)	two-part belt with woven fabric inlay
Loading	max. 120 kg
Conveying speed (vF)	up to 4 m/s on outside radius
Drive power (PN)	0.37 kW to 3.0 kW, depending on speed and load, see service specification list or motor production identification tag
Type of drive	see service specification list
Minimum distance to conveyors in front and behind	20 mm

Electrical data

Name	Data
Motor voltage supply	standard: 230 V / 400 V AC 50 Hz, for deviations see motor production identification tag

Electrical data (cont'd.)

Name	Data
Motor brake voltage	Standard: 230 V AC / 400 V AC, for optional variations see motor production identification tag
Type of protection guard	Standard: IP55, not protected against explosion

Place of installation

Name	Data
Ambient temperature	5 °C to +40 °C, for short periods up to +50 °C (max. 1 h)
Relative air humidity	max. 80 %
Ambient atmosphere	Normal atmosphere, no potentially explosive atmosphere, no oil or gas in the atmosphere, no corrosive components
Installation	In-company requirements - safely protected from rain; in stable position, screwed to solid surface

Other data

Name	Data
Year of construction	see production identification tag
Noise emission	Sound pressure level measured in accordance with DIN EN 13023:2003-03 below 77 dB(A).

Machine areas

The conveyor consists of the following areas:

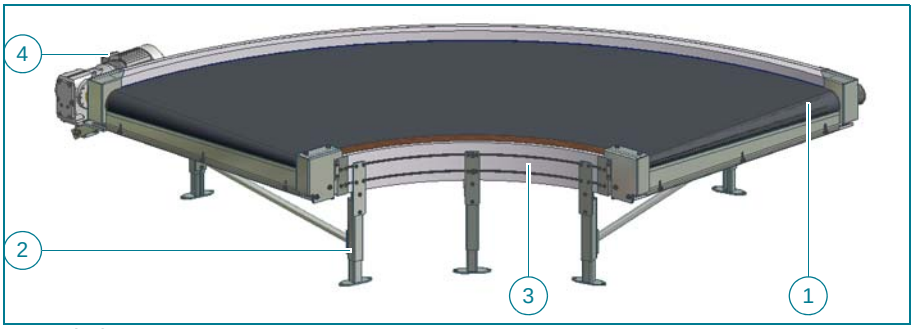

Curve belt conveyor TS 1600-105FH2

Design: bevel wheel gear motor, design M1, position outside left

Picture illustration

No.	Name
1	Tail pulley
2	Support
3	Conveyor track
4	gear motor

Machine parts

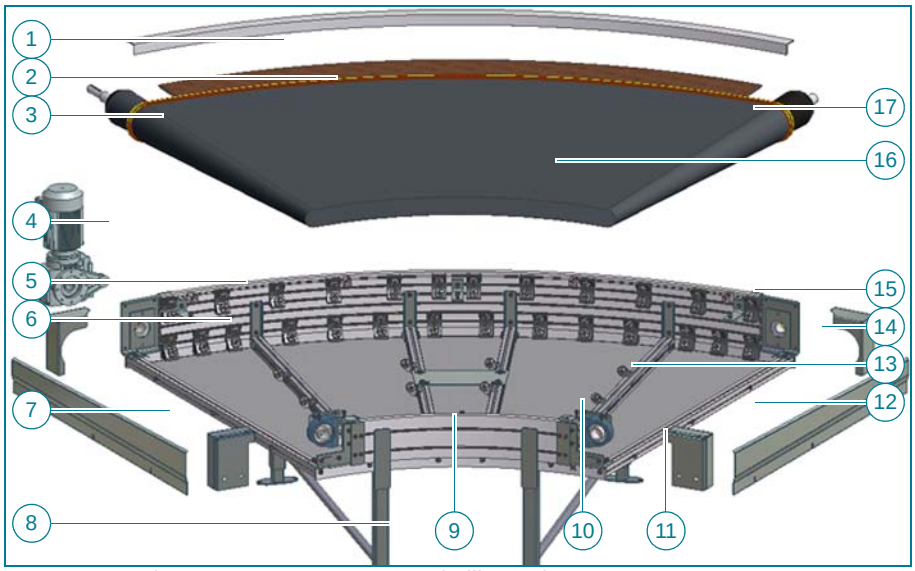

Conveyor track TS 1600-105FH2, example illustration

Picture illustration

No.	Name	No.	Name
1	Finger guard	10	Pulley bearing
2	Bed	11	Covers, pulley bearing
3	Drive pulley	12	Finger guard plate, tail pulley side
4	Drive	13	Lower conveyor track cover
5	Belt edge holder, top	14	Covers, bearing block
6	Belt edge holder, bottom	15	Bearing block, outside
7	Finger guard plate, drive side	16	Conveyor belt
8	Support	17	Tail pulley
9	Basic frame		

Optional machine equipment

In the following you will find an example for both a baggage and a tube guidance.

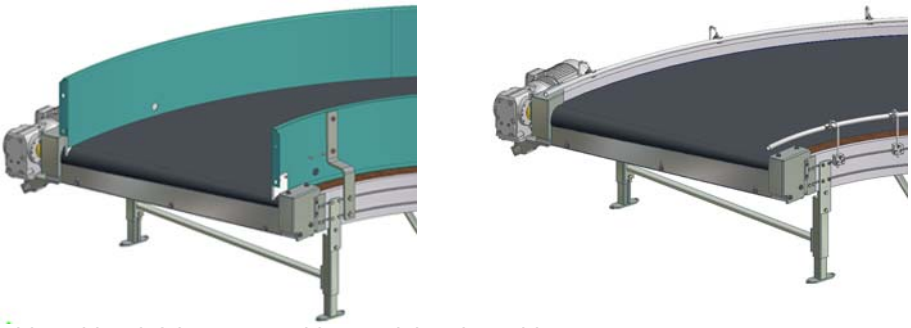

Side guides: left baggage guidance, right tube guidance

Transportation and erection

Delivery of the machine

Conveyors up to a length of approx. 3 m are completely assembled at the factory and are delivered with preadjustments. Longer conveyors are usually delivered in part elements. The individual parts are marked with labels on the section points. Supports, suspensions and other attachment parts are separately included in the delivery.

Unpacking the machine

Carry out the following procedures:

1. Move off all transport packaging
2. Check for possible transport damage.
3. Check that all items listed on the delivery note have been delivered.

✓ Machine has been unpacked and is complete.

A longer storage period of the machine

At a storage time of more than 4 weeks, the conveyor belt must be detensioned in order to prevent damages caused by bulges The procedure for slackening off the belt is described under Repairs. If the machine is transported by sea, a seaworthy packaging is required.

Observe the valid operating conditions described in the following also for storage periods.

For questions concerning storage and transport, please contact TRANSNORM SYSTEM GmbH.

Disposing of Packaging Material

The individual components of the packaging are correspondingly marked and mainly consist of the following materials:

- Wood
- Cardboard
- PP- and PE-foil
- Styrofoam

Separate the different materials and dispose them accordingly. Observe the local rules and regulations for disposal.

Installing the machine

Ground requirements

The machine may only be mounted stationary on a stable concrete surface (concrete class at least B25 or the corresponding standard in the country) or on an equivalent steel structure. The nominal strength must be at least 25 N/mm². The installation location must not be subject to vibration and must be capable of taking up the static and dynamic loads. The surface must be level.

In case special attachments are used which enable a mobile operation, this will be stated in the service specifications.

Tolerable operating conditions

DANGER

Explosion hazard!
The machine is not explosion-protected.
➔ Do not operate the conveyor in potentially explosive atmospheres.

The required space for operation and maintenance depends on the individual requirements.

The place of installation must fulfil the following conditions:

- normal atmosphere (not containing oil or gas, no corrosive components)
- Ambient air temperature +5 °C to +40 °C, temporarily to +50 °C (max. 1 h)
- relative air humidity max. 80%
- internal set-up
- Reliably protected against moisture and precipitation.

Transport within the company

DANGER

Increased risk of accident due to:
Falling or slipping loads.
➔ Observe the maximum lifting weight and the centre of gravity of the machine.

The internal transportation of the machine to its final place of erection may be carried out with different lifting elements. Use licensed and suitable equipment only.

The machine or machine parts are only permitted to be lifted on the basic frame. If there are supporting points on the basic frame, only these points are suitable for attaching lifting equipment. This guarantees torsion-free transport.

Please refer the delivery note for the actual total weight.

Auxiliary equipment

Required auxiliary equipment

Overhead crane, gantry crane	Safe working load 2,000 kg
Industrial truck	Safe working load 2,000 kg min. lifting height 4,000 mm
Lift truck cross beam, safe working load 2,000 kg	
Lift truck hook, safe working load 2,000 kg	
Adjustable cross beam, safe working load 2,000 kg L max. = 4,000 mm L min. = 2,000 mm	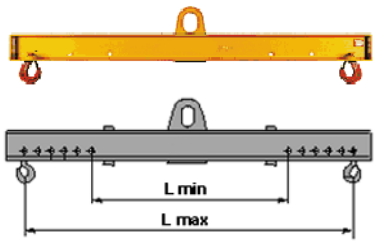
Adjustable cross beam, double safe working load 2,000 kg La max. = 4,000 mm La min. = 2,000 mm Lb max. = 2,000 mm Lb min. = 1,000 mm	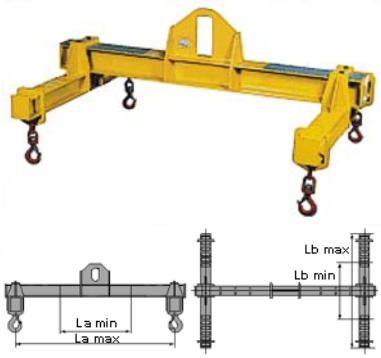
Round slings, safe working load 1,000 kg U min = 3 m	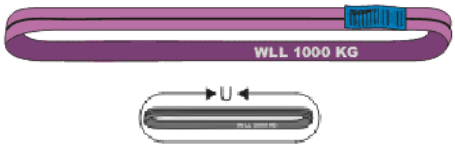

Required auxiliary equipment

Hoisting chain 8x24 with shortening claw, safe working load 2,500 kg L min = 2 m	
Round sling hook, safe working load 1,000 kg L = 84 mm A = 24 mm D = 35 mm F = 17 mm G = 20 mm M = 8 mm	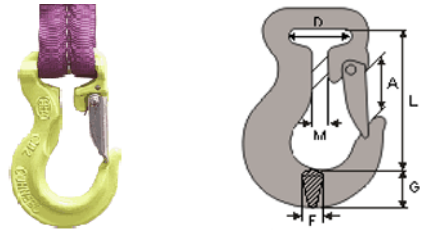
Chain shackle, safe working load 3,250 kg A = 16 mm B = 51 mm C = 27 mm D = 20 mm F = 42 mm	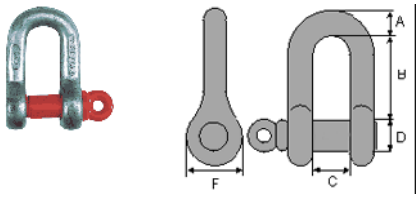
Support E2009698 Is intended exclusively for in-company transport of the TS conveyors	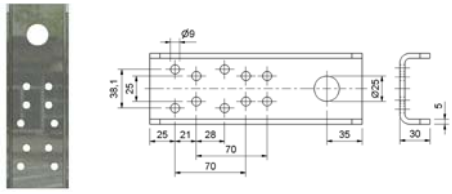
Installation of holder E2009698 to conveyor bed with mounting kit consisting of: 4 pcs. N1001434 Slot nut M8 4 pcs. K1009663 screw M8x18 Exclusively intended for in-company transport of the TS conveyors.	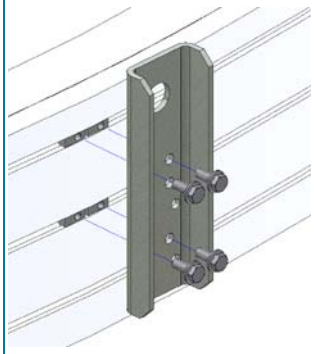

Transportation with industrial truck or crane

TS 1600-105FH2 up to 45°

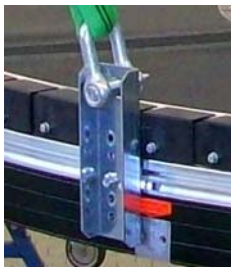

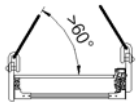

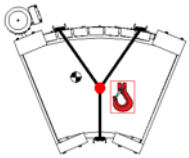

Required auxiliary equipment:
1x lift truck cross beam
3x round sling / hoisting chain
3x chain shackle
3x transportation plate (E2009698)

TS 1600-105FH2 45° up to 90°

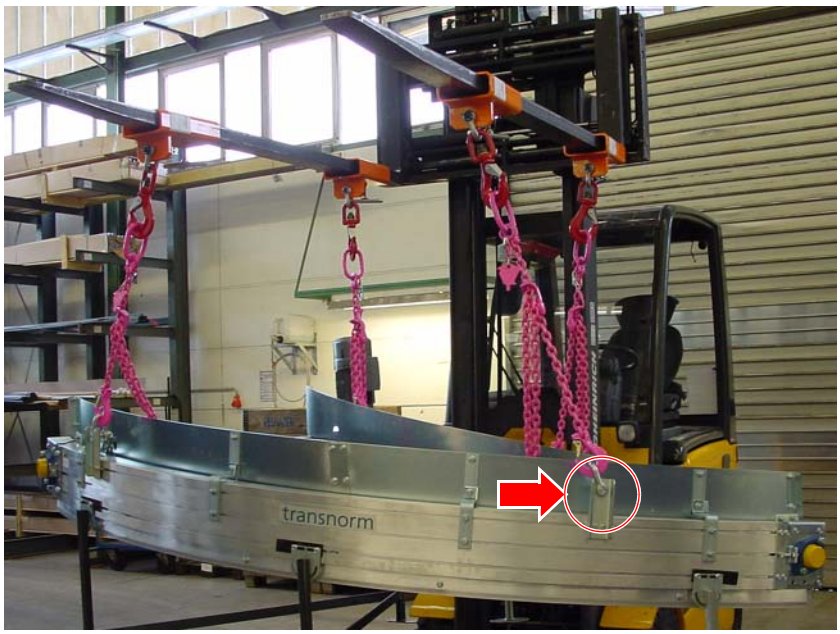

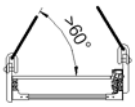

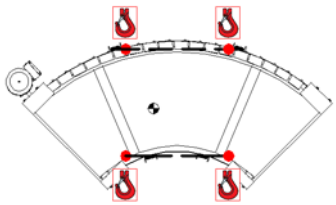

Necessary auxiliary equipment:
1x adjustable cross beam or 4x lift truck hooks
4x round sling / hoisting chain
4x chain shackle
4x transportation plate (E2009698)

TS 1600-105FH2 more than 90°

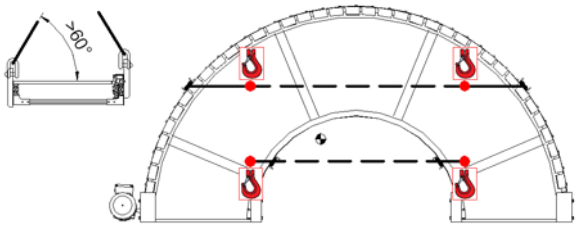

Necessary auxiliary equipment:
1x cross beam, adjustable on two sides or 4x lift truck hooks
4x round sling / hoisting chain
4x chain shackle
4x transportation plate (E2009698)

Final assembly on site

We recommend to have the assembly carried out by TRANSNORM SYSTEM GmbH. Alternatively, final installation could be carried out under the supervision of or after instruction by TRANSNORM SYSTEM GmbH.

In any case, the assembly must be carried out by specialised staff authorised by the user.

Please take into consideration that some work steps of the following assembly instructions may not apply to your individual conveyor due to variations in design and equipment.

Assembly

Curve belt conveyors are almost always delivered in one piece. Curve conveyors delivered in multipart require assembly works carried out by TRANSNORM SYSTEM GmbH. Do not install these machines yourself.

Carrying out Installation

Depending on the design the supports are either equipped with standpipes or support angles. Installation is carried out in accordance with the support layout drawing. The supports must always stand vertically, this is also valid for tracks with incline.

➔ Mount curve belt conveyor

DANGER

Danger of life due to parts of the body getting squashed!
Machine can tilt and crush body parts.
➔ Secure machine to prevent it falling.
➔ Use hoists to raise and lower the machine.

DANGER

Danger of fatal injury through crushing of parts of the body!
Machine falls down.
➔ Only use supports/suspensions approved by Transnorm.
➔ Mount supports/suspensions exactly as described in the system layout or support layout drawing, if available.
➔ Do not exceed minimum spaces as defined in the system layout/support layout drawing.

Carry out the following procedures:

1. Attach the supports or suspensions to the framework of the basic frame using the joining elements (1) provided.
2. Loosen off the fixing screws (2) and adjust the angle of inclination.

3. Release mounting bolts (3) and adjust the height.

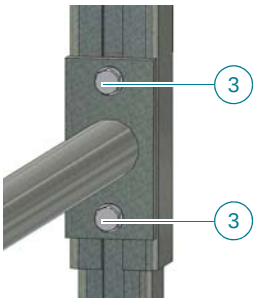

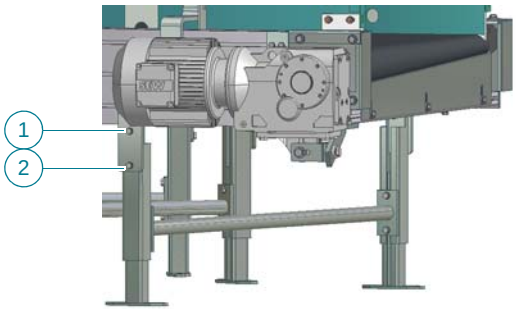

↳ Curve belt conveyors are almost always delivered in one piece. Curve conveyors delivered in multipart require assembly works carried out by TRANSNORM SYSTEM GmbH. Do not mount these machines yourself.

? Is the conveyor on optimal setting?
The standard curve belt conveyor is delivered with a drawn-in endless conveyor belt. The conveyor is delivered with an optimum set up.
➔ However, if you do have to readjust the tension of the belt, please proceed as described in "Maintenance."

✓ Curve belt conveyor has been mounted.

➔ Align and anchor the machine, all types

DANGER

Danger of fatal injury through crushing of parts of the body!
When the supports have not been anchored yet, the machine may overturn and fall during shifting it to its correct position.
➔ Lift machine using suitable hoists before aligning it. To do so, observe the data provided under "Transport within the company."

DANGER

Danger of fatal injury through crushing of parts of the body!
Loose mounting bolts for the height adjustment may allow the machine to slide.
➔ When adjusting supports or suspensions, additionally support the conveyor.
➔ For suspensions, create a positive locking joint by means of retaining bolts.

Carry out the following procedures:

1. Align the machine horizontally and free of torsion in accordance with the required infeed and outfeed height. For this, loosen the mounting bolts for adjusting the height of the supports (3).
2. Check the levelling. Observe the correct heights for infeed and outfeed.
   ↳ Depending on the system concept, different heights may be useful. The system design engineer will comment on this.
3. Only in case of floor anchorage: anchor supports so they cannot change position any more. The foot plates of the supports are equipped with corresponding bore holes.
4. Only in the case of ceiling suspension: anchor the suspensions so that they can no longer change position. The laces of the suspensions are equipped with bores already.
5. Use retaining bolts to secure all joints with positive locking.
6. Manually check the transfer accuracy at the front and back of the machine. Use loads according to specifications to carry out this check.

✓ The machine has been aligned.

✓ The machine has been installed and aligned.

Mount side guides

It depends on the scope of delivery whether your conveyor is delivered with side guides. See performance specifications for this information.

Carry out the following procedures:

1. Mount side guides.
2. If necessary, mount photoelectric sensor supports in such a way that it becomes impossible to reach into the conveyed loads flow.
3. If the hazard is still present, affix the warning label "Hand injury" to the side guide next to the hazardous area on the outside. Make sure it is highly visible.

✓ Side guide is installed.

Electrical connection

DANGER

Danger of fatal injury caused by electricity
The machine is powered with 3-phase alternating current.
➔ The electrical installation must be carried out by qualified and authorised electricians.

Carry out the following procedures:

➔ Connect the motor according to the wiring diagram of the motor manufacturer. This is included in the motor delivery (see interior of the terminal box cover).

↳ If this wiring diagram is missing, the motor must not be connected.

✓ The machine has been connected.

Operation

Commissioning

Essentially the same procedure is carried out for commissioning and start-up after maintenance.

The daily start-up process via the control unit of the overall conveyor system is described in the system documentation or in the control documentation.

The machine is designed for the following electrical connection data:

- 3 phases, neutral conductor and earthing conductor
- Alternating voltage 400 V
- line frequency 50 Hz.

Commissioning and start-up after service and maintenance works

Precondition:

✓ Machine has been erected appropriately.

✓ The working area of the machine is inaccessible for unauthorised personnel.

✓ The main switch for the power supply to the machine is switched off and has been secured against accidental switch-on.

✓ Machine downtime no longer than 4 weeks.

➔ Check assembly

Carry out the following procedures:

1. Check the position of all drive- and tail pulleys, rollers and snub- and return rollers.
2. Check that drive elements are correctly fitted, aligned and tensioned.
3. Check the machine for foreign particles and remove them if necessary.

✓ Assembly has been checked.

➔ Carry out electrical installation

DANGER

Danger of fatal injury caused by electricity!
The machine is supplied with 3-phase alternating current.
➔ The electrical installation is to be carried out by qualified and authorised electricians only.

Carry out the following procedures:

1. Lay all required cables.
2. Connect required plugs to cable ends.
3. Connect the cables and set up all required connections in accordance with the operating instructions of the motor supplier (enclosure), chapter "electrical installation".

✓ Machine has been connected.

➔ Check direction of rotation

WARNING

Risk of injury due to open machine parts!
Rotating machine parts may retract parts of the body, hair and clothes and cause crushes.
➔ Put on tight protective clothing.
➔ Use a snood-type cap in case of long hair.
➔ Do not reach into running machine.
➔ Do not access the machine.
➔ Ask a second person to supervise.

Carry out the following procedures:

1. Briefly switch on the machine.
2. Check the correct direction of rotation.
3. Switch off machine.

✓ Direction of rotation has been checked. Machine running.

➔ Carry out test run

WARNING

Risk of injury - exposed machine parts!
Parts of the body, hair and clothing can become caught in rotating machine parts and crushed.
- ➔ Wear close-fitting protective clothing.
- ➔ Use a snood-type cap in case of long hair.
- ➔ Do not reach into running machine.
- ➔ Do not access the machine.
- ➔ Ask a second person to supervise.

Carry out the following procedures:

1. Remove all foreign objects from the working area of the machine.
2. Switch on machine.
3. Check it is running smoothly.

? *Noise development*
If excessive noise occurs
➔ Locate source and eliminate fault, see "Troubleshooting".

4. Check the conveyor belt for correct tension and adjustment.

? The belt does not keep the line or jumps out of its holders.
Belt must be readjusted.
➔ see „conveyor belt“ in chapter „corrective maintenance“.

✓ The machine is ready for normal application.

✓ The machine has been put into operation.

Normal operation

The normal operation includes the daily turn-on and switch-off procedure and the operation by the operators.

Operation of the conveyor via the overall conveyor control system is normally described in the system documentation or in the control system documentation.

All procedure defined in the maintenance schedule must be carried out after a machine downtime of more than 4 weeks. Afterwards, proceed as described in chapter „start-up“

Shutdown

The shutdown procedure includes the switch-off before service and maintenance- and repair works or before downtimes.

Carry out the following procedures:

1. Turn-off the main switch for the power supply according to the control unit documentation.
2. Secure against accidental switch-on.

✓ The machine has been decommissioned.

Maintenance and care

The work steps described in this chapter are to be carried out by qualified personnel only.

Important information regarding electrical installations:

- Regularly check the electrical equipment
- Refasten loose connections and joints
- Immediately replace damaged lines and cables
- Always keep the control cabinet closed

Maintenance works

Routine maintenance is the precondition for safe operation of the machine. Adhere to the intervals given in the maintenance schedule. Maintenance also includes regular cleaning in accordance with the specific operating conditions.

Motor maintenance

Electric motors are to be serviced as recommended by the manufacturer. For detailed information, please refer to the operating instructions of the motor manufacturer, chapter service inspection/maintenance. You will find these documents in the annex to these operating instructions.

Gear unit maintenance

Gear units must be serviced according to the manufacturer's specifications. For detailed information, please refer to the operating instructions of the motor manufacturer, chapter service inspection/maintenance. You will find these documents in the enclosure of these operating instructions.

Upon your request we will provide an optimised maintenance contract based on your individual requirements. To guarantee safe operation of the machine, we recommend that you to make use of our TRANSNORM SYSTEM Service at least once a year.

Lubricants

Lubricants

Type of lubricant	Description
Gear oil	See motor manufacturer's operating instructions (annex)
Lubricating grease	ARAL HLP 2, BP Energrease LS-EP 2, ESSO Beacon EP 2, KLÜBER Staburags NBU 12, KLÜBER Centoplex EP 2, MOBIL Mobilux EP 2, SHELL Alvania R2
Chain oil	OKS 340, OKS 341, BECHEM Berumoly P 73, BECHEM Berumoly P 80

Maintenance plan

Calculation basis for the maintenance works is a single-shift operation.

DANGER

Increased risk of accident due to:
Exposed machine parts when protective devices are removed.
- ➔ Do not reach into running machine.
- ➔ Do not access the machine.
- ➔ Switch the machine off during maintenance works that do not require that it is running.
- ➔ Secure the machine against unintentional restarting.

Maintenance schedule

Interval	Assembly group	Maintenance works / controls
Daily	Complete machine	Inspection: ▪ After work or in case of a shift change over, make sure all possible load remains are cleared out of the machine. ▪ There may not be any foreign particles left on the belt or in the pulley / roller areas.
Daily	Protective devices	Visual inspection: ▪ Is the equipment complete according to the specifications in the operating instructions? ▪ Is all the equipment undamaged and functional?
Daily	Conveyor belt	Clean belt. Visual inspection: ▪ Are the belt edges or the surface damaged? If so, replace belt. ▪ Is the belt bulging up? If so, correct belt tension and adjustment.

Maintenance schedule (cont'd.)

Interval	Assembly group	Maintenance works / controls
Depending on the individual case	Gear motor Regard operating instructions of manufacturer!	Gear: ▪ Are there any oil marks under the gear? If so, seal the leakage and optimise the oil level. ▪ Check the fixation and alignment. ▪ Abnormal running noises? Check bearings. Motor: ▪ Check cable feeding and temperature. ▪ Abnormal running noises? Check bearings. ▪ Check cooling fin and air leak.
Monthly	Drive pulley	Clean drive pulley. Visual inspection: ▪ Is the surface worn or damaged? ▪ If so, replace drive pulley.
Monthly	Bearings of belt edge holders	Inspection: ▪ Can abnormal running noise be heard from bearings? If so, Replace belt edge holders. ▪ Is an excessive amount of lubrication coming out of the bearings? If so, replace belt edge holders.
Monthly	Flange bearings and pedestal bearings	Inspection: ▪ Can abnormal running noise be heard from bearings? If so, replace bearings. ▪ Compare bearing temperatures. If one bearing is much hotter than the others, replace it.
Every 6 months	Joining elements	Check that screws/bolts subject to dynamic load are tight.
Quarterly	Supports with rubber-metal buffers	Visual inspection: ▪ Rubber-metal buffers damaged? If so, replace rubber-metal buffers. ▪ Rubber-metal buffers loose? If so, fasten joining elements.

Cleaning and care

DANGER

Danger of injury due to particles forced out by compressed air!
Blindness and injuries to the skin are possible.
- ➔ Wear personal protection equipment
- ➔ Wear protection goggles

DANGER

Increased risk of accident due to:
Exposed machine parts when protective devices are removed.
- ➔ Do not reach into running machine.
- ➔ Do not access the machine.
- ➔ Switch the machine off during cleaning works that do not require that it is running.
- ➔ Secure the machine against restarting.

Clean the machine regularly and appropriately for the degree of soiling. It may only be cleaned dry (with a brush, cloth, compressed air, etc.). Make sure the machine and especially the electrical components are protected from wetness.

Repairs

Spare part purchasing

Only genuine TRANSNORM SYSTEM GmbH spare parts may be used. DIN-parts may be ordered from specialised trade.

When making inquiries or placing orders, we recommend that you send a copy of the spare parts list to our customer service department, stating the type and amount of parts required. You will find the address at the beginning of these operating instructions.

The spare parts list forms part of the technical order documentation.

The work steps described in this chapter are to be carried out by qualified personnel only.

Work tools

Tools, equipment and supplies

Tools	Auxiliary materials	Equipment
Set of tools (spanner, turn-screw, pliers...)	Pneumatic screwdriver	Power and voltage supply
Torque spanner	Toothed belt tension meas-uring tool, mechanical	Compressed-air supply for cleaning
Circlip pliers	Device for lifting and lowering the machine or parts of it	
Combination spanner 10 13 14 15 17 19 22 and 24 mm	Transport cart, movable pedestals with automatic locking device	
Hexagon socket wrench 2 2.5 3 4 5 6 and 8 mm	Ladders, steps, pedestals on working platforms	
Hexagon socket wrench with ball head 5 and 6 mm	Fitting foam	

Tightening torques

The tightening torque requirements are based on an average coefficient of friction µtotal=0.125. They must be observed for screwed connections.

The locking torques for special joints are given in the drawings.

Tightening torque

Values for screw connections on steel parts						
	Electro-galvanised screws			Black, untreated screws		
	Tightening torques [Nm]			Tightening torque [Nm]		
d	5.6	8.8	10.9	5.6	8.8	10.9
M5	2.5	5.4	7	2.8	6	8
M6	4.5	9.5	13	4.8	10	14
M8	11	23	32	12	25	35
M10	22	46	64	23	49	69
M12	38	80	110	40	86	120
M14	60	125	180	64	135	190
M16	92	195	275	98	210	295

Data for screw connections on aluminium parts		
	Electro-galvanised screws	
	fastening torques [Nm]	
d	5.6	8.8/10.9
M5	2.5	5.4
M6	4.5	9.5
M8	11	23
M10	22	46
M12	28	80
M14	60	125
M16	92	195

When using taperlock bushes for drive elements, observe the following tightening torques.

Tightening torque

Bush no.	1008 1108	1310 1315	1210 1215	1610 1615	2012 2017	2517 2525
Tightening torque [Nm]	5.6	20	20	20	30	50
	Check the tightening torques after 1 hour of operation.					

Guards

Fixed guards as defined by the machinery directive 2006/42/EC are guard exclusively for the protection of persons against the hazards arising from moving parts (machinery directive 2006/42/EC: Addendum 1 No. 1.3.8.1 and 1.3.8.2). The machinery directive stipulates that these protective devices must be attached by means of captive fasteners so that on removal they remain attached to the protective devices or machine.

TRANSNORM provides captive fasteners for protective devices if the operating company needs to demount a safety device from a machine. This is necessary for maintenance and cleaning. Generally no hazard is posed by the loss of captive fasteners when a fixed protective device is removed from the machine by technical personnel to conduct repairs.

TRANSNORM uses fixed protective devices to provide effective protection in hazardous areas. Such protective devices may include covers

- that are rarely/never removed
- that are opened/removed only by technical personnel
- that cover only a low risk potential
- that are located on machines that are operated behind a master protective cover/enclosure

No captive retaining elements are fitted on these covers as the risk potential is classified as low. In this case, the individual parts normally remain assembled when carrying out repairs on site or in the workshop.

Guards that need to be opened/removed by the operating company for maintenance purposes generally comprise the following covers:

- Covers on drive assemblies (e.g. protective covers/hoods for chain and toothed belt drives)
- Covers on infeed/inlet points if they have to be removed or opened for maintenance purposes (e.g. protective covers for snub rollers)
- Bearing covers, covers on rotating parts (e.g. covers on pulley bearings)
- Bottom covers (e.g. perforated plates at bends)

Replacing a side guide

The side guide must be demounted for certain maintenance and repair work, but not replaced. When replacing put out the new side guide ready for use according to the spare parts list.

Precondition:

✓ Machine has been taken out of operation.

✓ Machine has been secured to prevent it being switched on inadvertently.

➔ Demount baggage guidance

DANGER

Increased risk of accident due to:
Falling or slipping loads.
➔ Observe the permissible lifting load of the hoists.
➔ Secure the load according to regulations.

Carry out the following procedures:

1. Mark position of the supports (1) on the frame (2).

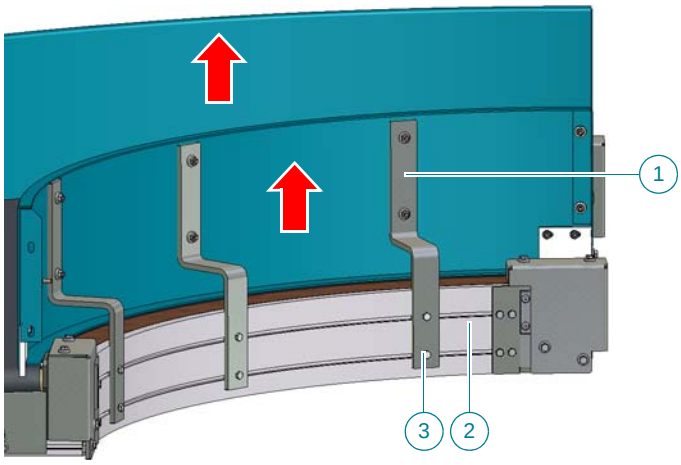

2. Remove joining elements (3).
3. Demount baggage guidance.
4. Place baggage guidance on suitable underlay.

✓ Baggage guidance is demounted.

➔ Mount the baggage guidance

Carry out the following procedures:

1. Position baggage guidance on frame (2).
2. Tighten joining elements (3) by hand.
3. Position holder (1) on marking.
4. Check the distance between side guide and bed (5 - 8 mm).

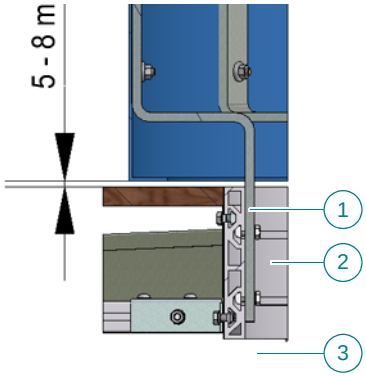

5. Tighten joining elements (3).

✓ Baggage guidance is mounted.

➔ Demount the tube guiding

DANGER

Increased risk of accident due to:
Falling or slipping loads.
➔ Observe the permissible lifting load of the hoists.
➔ Secure the load according to regulations.

Carry out the following procedures:

1. Mark position of the supports (1) on the frame (2).

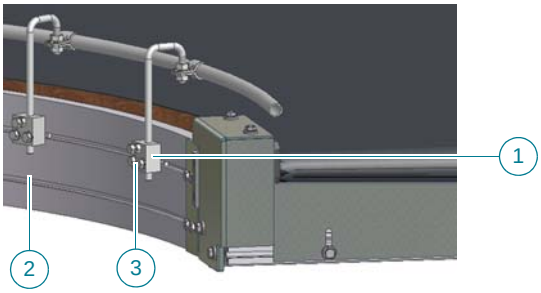

2. Remove joining elements (3).

3. Remove tube guidance.
4. Place tube guidance on suitable underlay.

✓ Tube guiding is demounted.

➔ Mount the tube guiding

Carry out the following procedures:

1. Position tube guidance on frame (2).
2. Tighten joining elements (3) by hand.
3. Position holder (1) on marking.

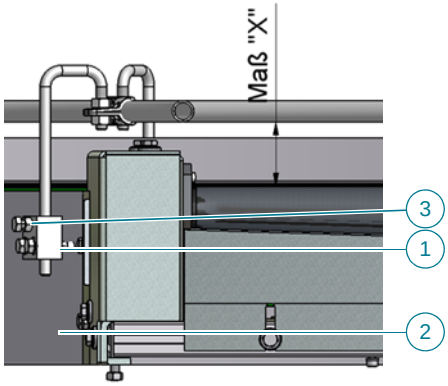

4. Tighten joining elements (3).

✓ Tube guidance is mounted.

✓ Side guide has been exchanged.

Belt exchange, standard

The patented belt guidance, consisting of a belt edge worked into the outer edge and precision ball bearings at an angle to the edge, guarantees a very low noise level and a long service life. The divided belt edge holders guarantee a very quick belt exchange.

Precondition:

- ✓ Machine has been taken out of operation.
- ✓ Machine has been secured against accidental switch-on.
- ✓ Side guide is demounted.
- ✓ Belt is loosened.
- ✓ Gear motor has been removed. Only in case of inside drive.

➔ Demount the cover

Carry out the following procedures:

1. Move off cover (1).
2. Remove finger guard (2).
3. Remove finger guard plate (3) on pulley- and drive side.

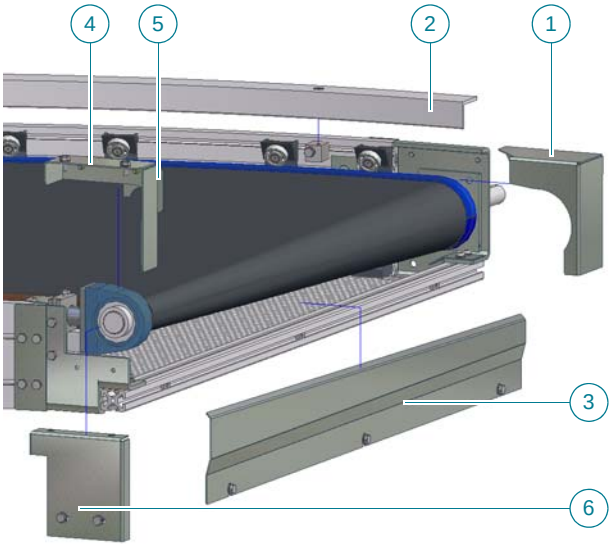

4. Remove cover (4) with finger guard (5) on the pulley and drive side.
5. Remove cover (6) on pulley- and drive side.

✓ Covers have been demounted.

➔ Loosen gear motor in case of an outside drive

Carry out the following procedures:

➔ Proceed as described under „Demount gear motor“.

✓ Gear motor has been loosened.

➔ Demount the upper belt edge holder parts of upper run

Carry out the following procedures:

1. Turn locking lever to „open“.

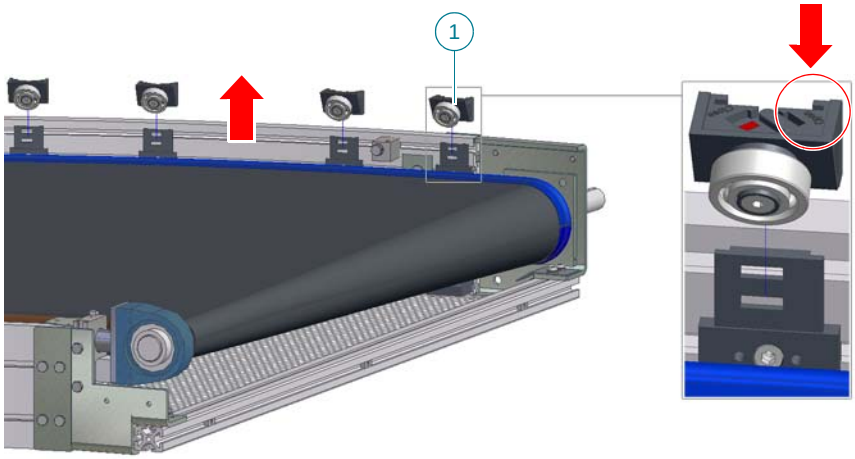

2. Remove upper parts of belt edge holders (1).

✓ Upper belt edge holder parts in the upper run are demounted.

➔ Demount the bed

Carry out the following procedures:

1. Remove joining elements (1) of bed.

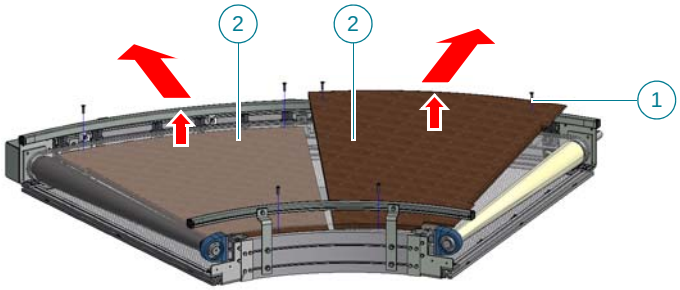

2. Remove bed (2) in the direction of the outside radius.

✓ Bed has been demounted.

➔ Demount the upper belt edge holder parts of lower run

Carry out the following procedures:

1. Turn locking lever to „open“.

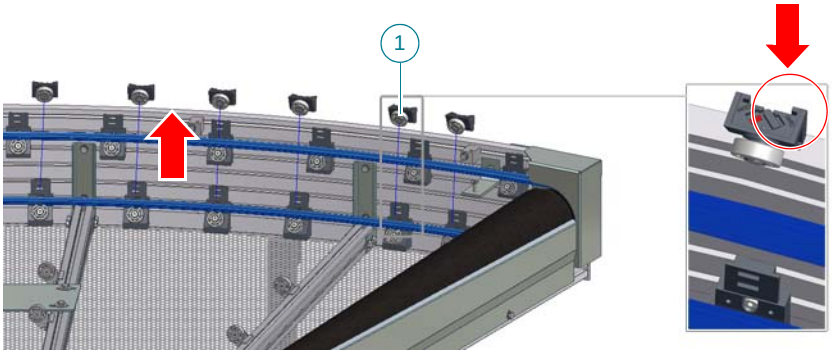

2. Remove upper parts of belt edge holders (1).

✓ Upper belt edge holder parts in the lower run are demounted.

➔ Loosen the drive- and tail pulley

Carry out the following procedures:

1. loosen grub screws of pedestal bearing.
2. Move off joining element (1).

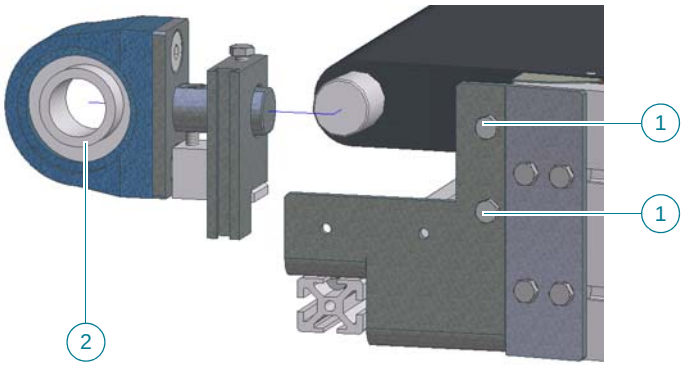

3. Lift pulley bearing (2), turn and pull it off the pulley journal.
4. Turn drive and tail pulley on frame and place on frame.

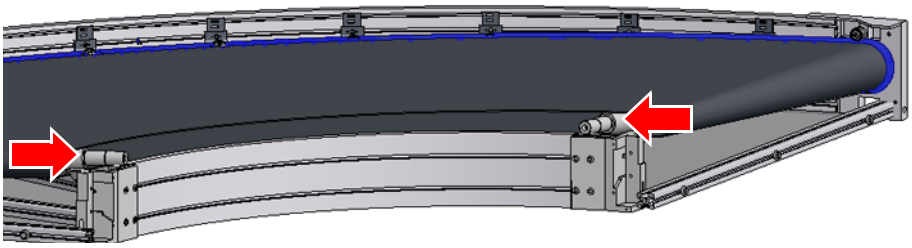

✓ Drive and tail pulley are loosened.

➔ Remove the belt

Carry out the following procedures:

1. Lift drive and tail pulley.

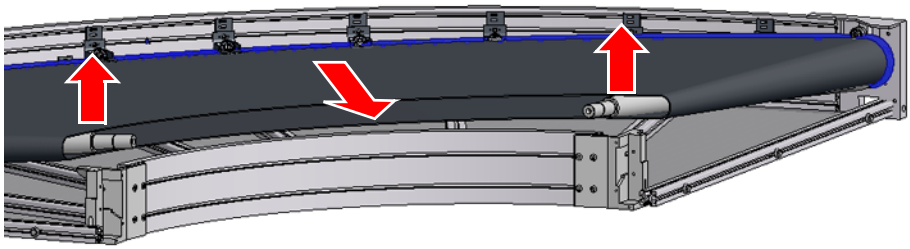

2. Lift-off belt in the direction of the inside radius.
3. Place drive- and tail pulley on frame.

✓ Belt has been removed.

➔ Insert the belt

Carry out the following procedures:

1. Lift drive and tail pulley.

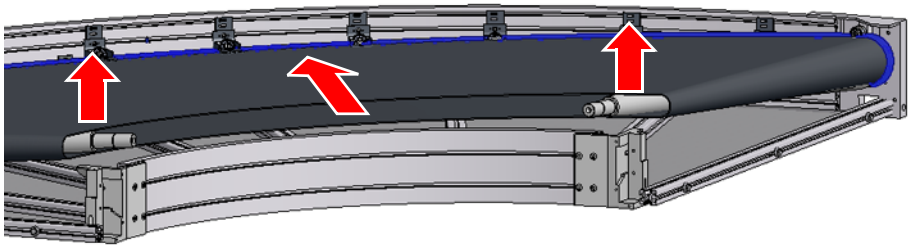

2. Push on belt in the direction of outside radius
3. Place drive- and tail pulley on frame.

✓ Belt has been inserted.

➔ Mount the upper belt edge holder parts of lower run

Carry out the following procedures:

1. Insert upper parts of belt edge holders (1).

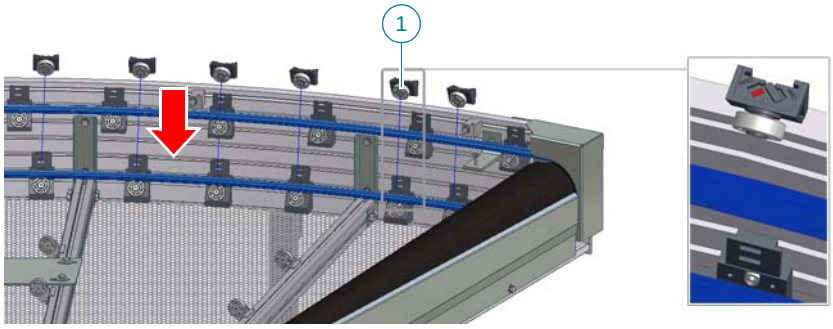

2. Check belt edge nose for correct position between ball bearings inside the holders.

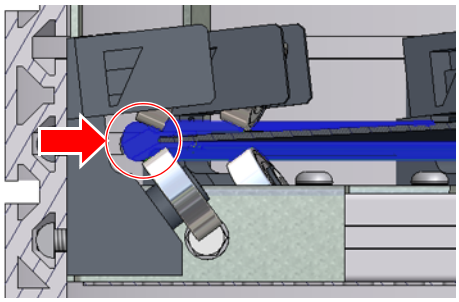

3. Turn locking lever to „close“.

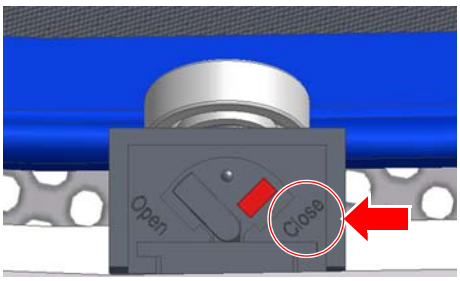

✓ Upper belt edge holder parts in the lower run are mounted.

➔ Fasten the drive- and tail pulley

Carry out the following procedures:

1. Slide pulley bearing (2) onto pulley journal.
2. Align drive and tail pulley and mount joining elements (1).

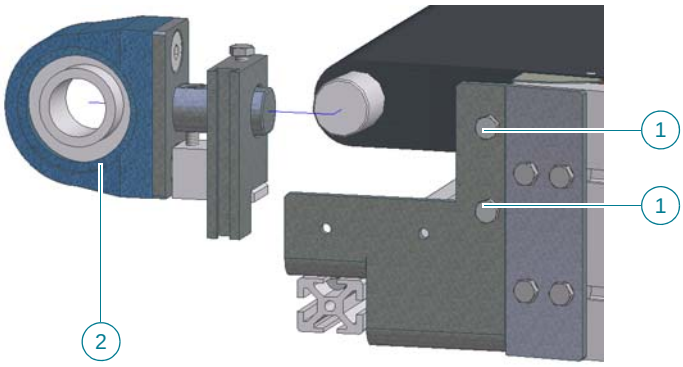

3. Screw the grub screws of the pedestal bearing tight and secure with thread lock fluid.

✓ Drive- and tail pulley have been fastened.

➔ Fit the bed

Carry out the following procedures:

1. Insert beading (2).

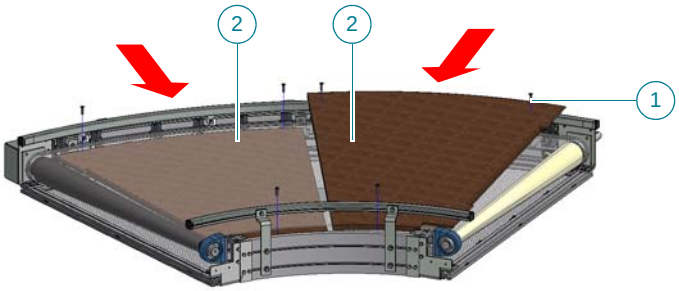

2. Fasten beading with joining elements (1).

✓ Bed has been fitted.

➔ Mount the upper belt edge holder parts of upper run

Carry out the following procedures:

1. Insert upper parts of belt edge holders (1).

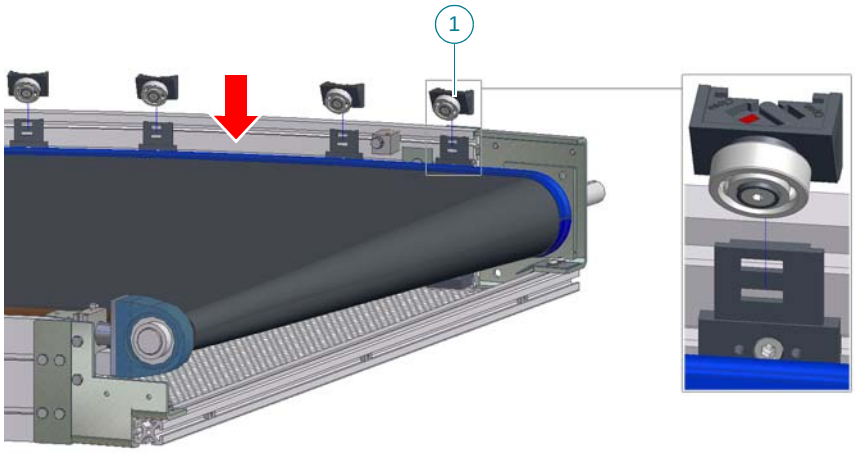

2. Check belt edge nose for correct position between ball bearings inside the holders.

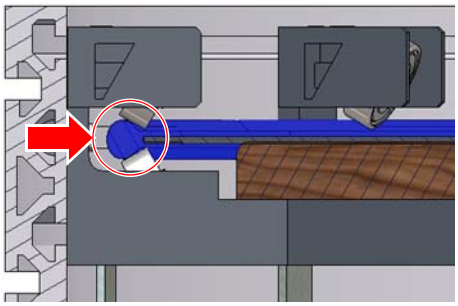

3. Turn locking lever to „close“.

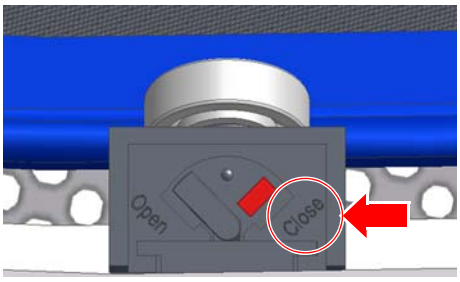

✓ Upper belt edge holder parts in the upper run are mounted.

➔ Fasten the gear motor with drive outside

Carry out the following procedures:

➔ Carry out procedures as described under „mount gear motor“.

✓ Gear motor is fastened.

➔ Tighten / adjust the belt

Carry out the following procedures:

➔ Proceed as described under "Tightening / adjusting the belt"

✓ Belt has been tightened and adjusted.

➔ Mount the covers

Carry out the following procedures:

1. Mount covers (6) and (4) with finger guard (5).

2. Align finger guard (5) and fasten.

3. Align and fasten finger plate (3), clearance <=5 mm.

4. Mount angled finger guard (2).

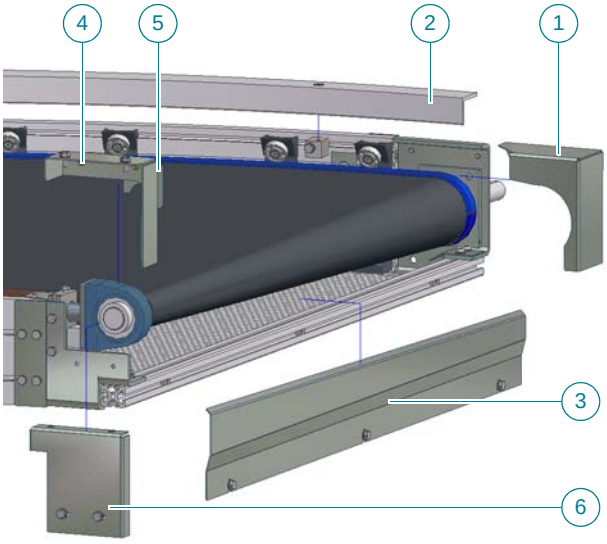

5. Mount cover (1).

✓ Covers are mounted.

➔ Mount the side guide

Carry out the following procedures:

➔ Carry out procedure as described under "Mount baggage guidance“ or "Mount tube guiding.“

✓ Side guide is fitted.

✓ The conveyor belt is replaced.

Belt exchange, alternative

In case of restricted work space, use suspension or multiple support.

Precondition:

- ✓ Machine has been taken out of operation.
- ✓ Machine has been secured against accidental switch-on.
- ✓ Side guide is demounted.
- ✓ Belt is loosened.
- ✓ Gear motor has been removed. Only in case of inside drive.

➔ Demount the cover

Carry out the following procedures:

1. Move off cover (1).
2. Remove finger guard (2).
3. Remove finger guard plate (3) on pulley- and drive side.

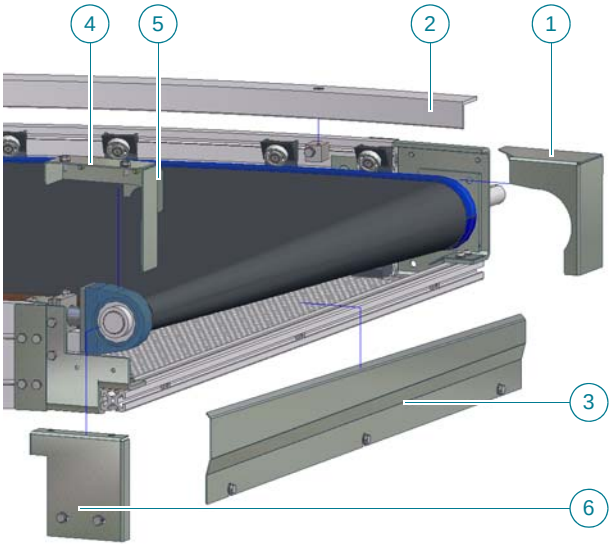

4. Remove cover (4) with finger guard (5) on the pulley and drive side.
5. Remove cover (6) on pulley- and drive side.

✓ Covers have been demounted.

➔ Loosen the gear motor in case of an outside drive

Carry out the following procedures:

➔ Proceed as described under „Demount gear motor“.

✓ Gear motor has been loosened.

➔ Demount the upper belt edge holder parts of upper run

Carry out the following procedures:

1. Turn locking lever to „open“.

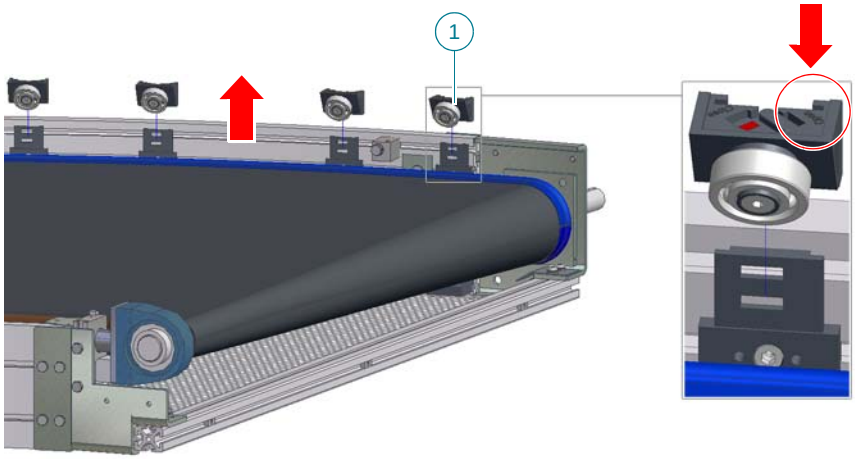

2. Remove upper parts of belt edge holders (1).

✓ Upper belt edge holder parts in the upper run are demounted.

➔ Demount the bed

Carry out the following procedures:

1. Remove joining elements (1) of bed.

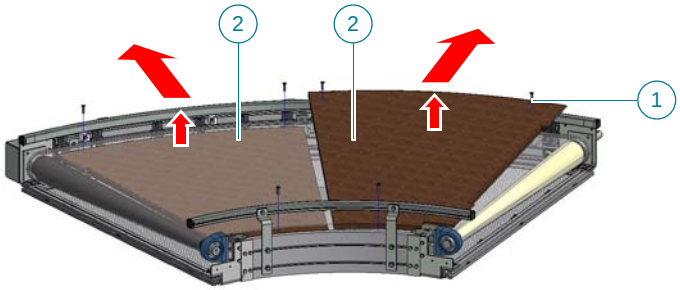

2. Remove bed (2) in the direction of the outside radius.

✓ Bed has been demounted.

➔ Demount the upper belt edge holder parts of lower run

Carry out the following procedures:

1. Turn locking lever to „open“.

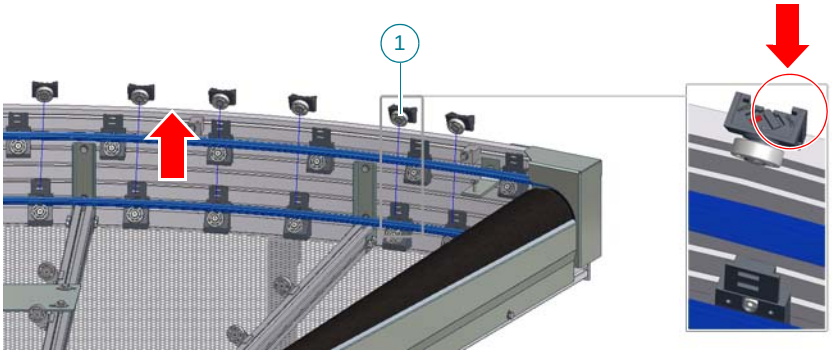

2. Remove upper parts of belt edge holders (1).

✓ Upper belt edge holder parts in the lower run are demounted.

➔ Remove the drive pulley (tail pulley)

WARNING

Increased risk of accident!
Pulley can tilt and crush body parts.
➔ Secure the pulley to prevent it falling.
➔ Use hoists to raise and lower the pulley.

Carry out the following procedures:

1. Release grub screws of the pedestal bearing (1).

2. Remove joining elements (2).

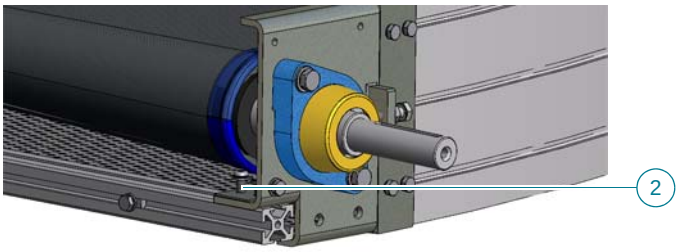

3. Remove cap (3) and joining elements (4).

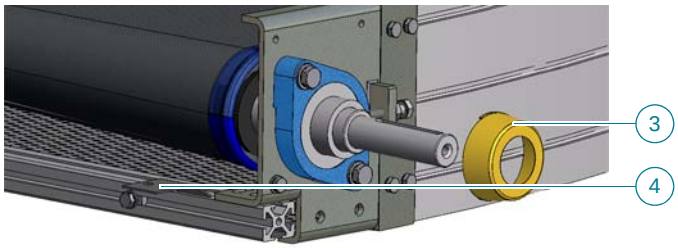

4. Undo screws (5).

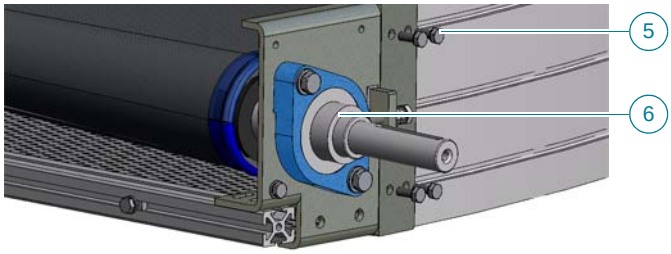

5. Loosen off grub screws of flange bearing (6).

6. Pull the pulley bearing (7) off the shaft journal.

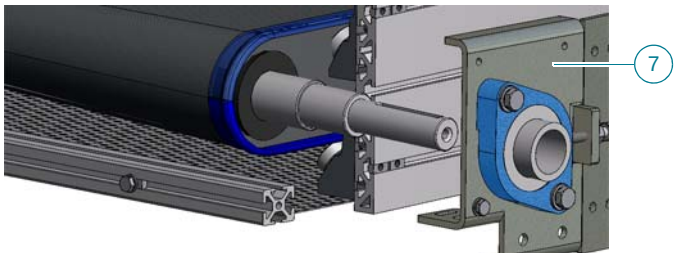

7. Pull out the drive pulley (tail pulley) (8).

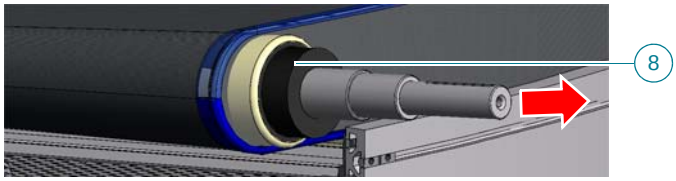

✓ Drive pulley has been removed.

➔ Remove the belt

Carry out the following procedures:

1. Release grub screws of the pedestal bearing (1).

2. Loosen off joining elements (3).

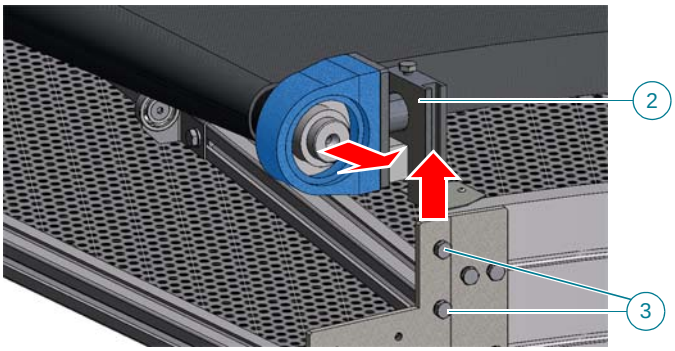

3. Lift pulley bearing (2) and pull off from pulley journal.
4. Lift drive pulley (drive pulley) and remove belt (4).

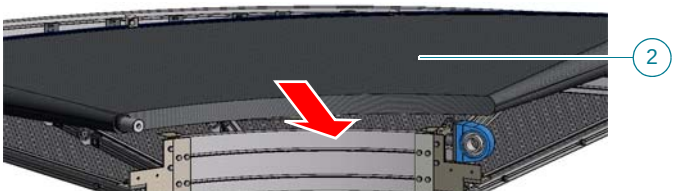

✓ Belt has been removed.

➔ Insert the belt

Carry out the following procedures:

➔ Assembly to be carried out in reverse order.

✓ Belt has been inserted.

➔ Mount the drive pulley (tail pulley)

Carry out the following procedures:

➔ Assembly to be carried out in reverse order.

✓ Drive pulley (tail pulley) is fitted.

➔ Mount the upper belt edge holder parts of lower run

Carry out the following procedures:

1. Insert upper parts of belt edge holders (1).

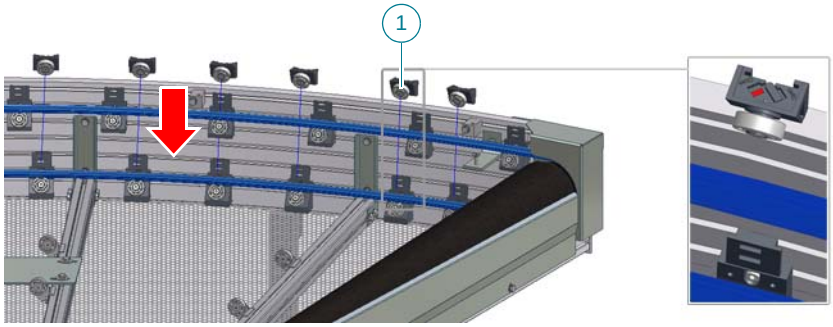

2. Check belt edge nose for correct position between ball bearings inside the holders.

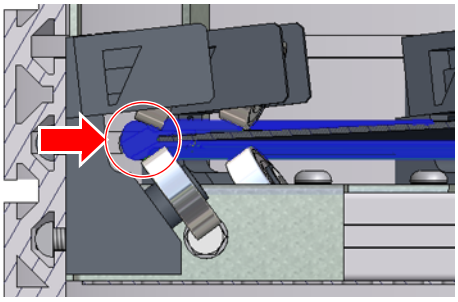

3. Turn locking lever to „close“.

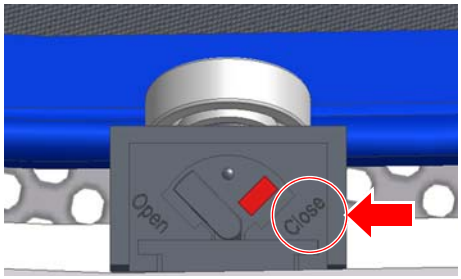

✓ Upper belt edge holder parts in the lower run are mounted.

➔ Fit the bed

Carry out the following procedures:

1. Insert beading (2).

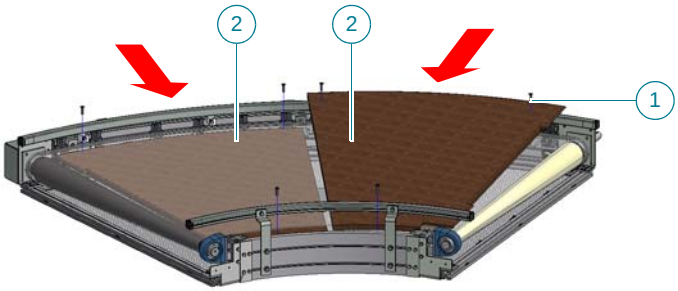

2. Fasten beading with joining elements (1).

✓ Bed has been fitted.

➔ Mount the upper belt edge holder parts of upper run

Carry out the following procedures:

1. Insert upper parts of belt edge holders (1).

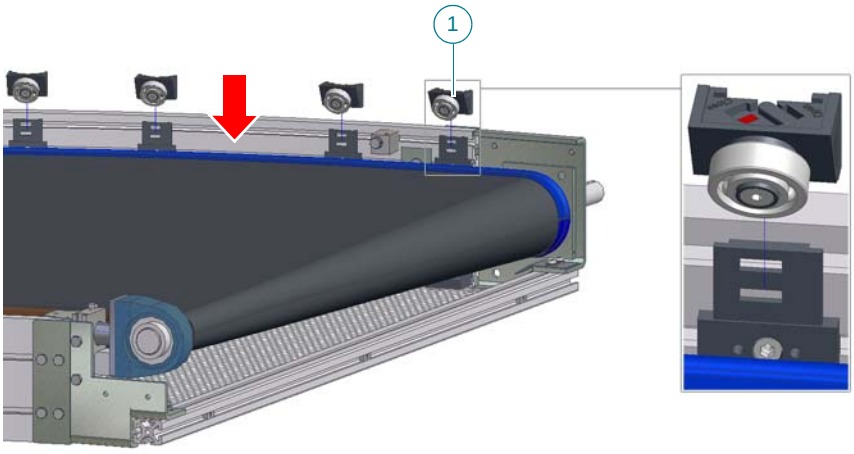

2. Check belt edge nose for correct position between ball bearings inside the holders.

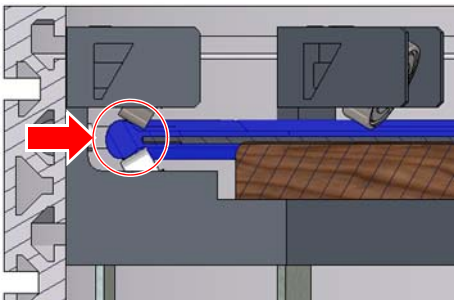

3. Turn locking lever to „close“.

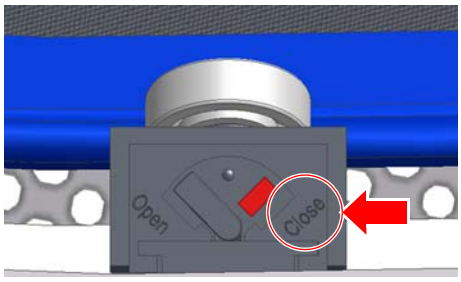

✓ Upper belt edge holder parts in the upper run are mounted.

➔ Fasten the gear motor with drive outside

Carry out the following procedures:

➔ Carry out procedures as described under „mount gear motor“.

✓ Gear motor is fastened.

➔ Tighten / adjust the belt

Carry out the following procedures:

➔ Proceed as described under "Tightening / adjusting the belt"

✓ Belt has been tightened and adjusted.

➔ Mount the covers

Carry out the following procedures:

1. Mount covers (6) and (4) with finger guard (5).

2. Align finger guard (5) and fasten.

3. Align and fasten finger plate (3), clearance <=5 mm.

4. Mount angled finger guard (2).

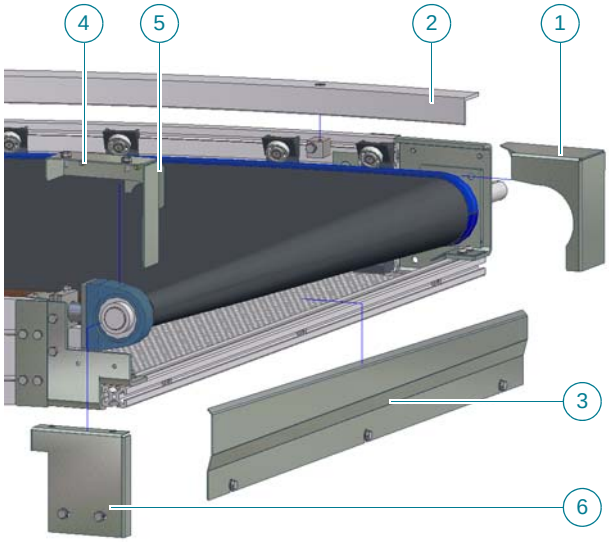

5. Mount cover (1).

✓ Covers are mounted.

➔ Mount the side guide

Carry out the following procedures:

➔ Carry out procedure as described under "Mount baggage guidance“ or "Mount tube guiding.“

✓ Side guide is mounted.

✓ The conveyor belt is replaced.

Tensioning/adjusting belt

The belt tension must be as low as possible on the outside and inside radius. A correctly tensioned belt lies plane on the bed while running, does not buckle up on the infeed side and can be moved easily by hand. However, a small bump near the endless joint of the belt is normal.

Precondition:

✓ Machine has been taken out of operation.

✓ Machine has been secured to prevent it being switched on inadvertently.

➔ Loosen the covers on tail pulley side / demount

Carry out the following procedures:

1. Loosen off finger guards (1).
2. Loosen off finger plate (2).

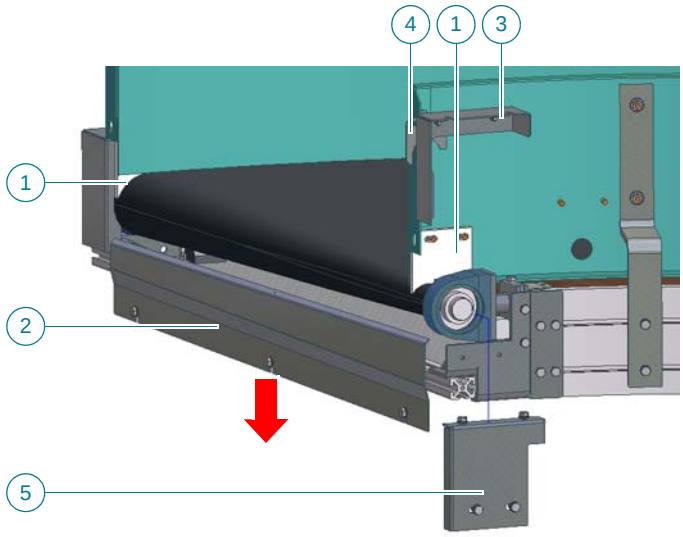

3. Remove cover (3) with finger guard (4).
4. Move off cover (5).

✓ Covers are loosened off / demounted.

➔ Loosen the belt on the tail pulley side

Carry out the following procedures:

1. Loosen joining elements (1), outside only.

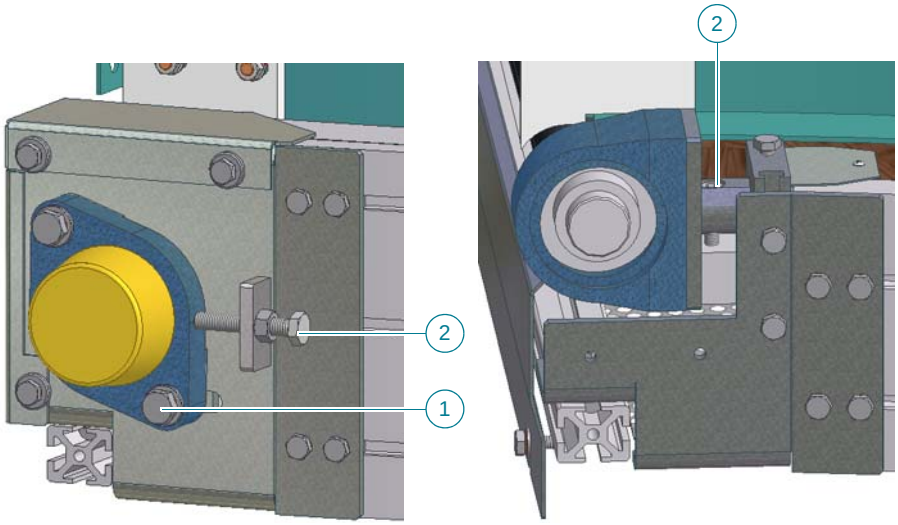

2. Release belt tension by turning the tensioning screws. Carry this out on the inside and outside. (left: outside pulley side, right: inside pulley side)

✓ Belt has been detensioned.

➔ Tighten / adjust the belt

WARNING

Risk of injury due to open machine parts!
Parts of the body, hair and clothing can become caught in rotating machine parts and crushed.
➔ Wear close-fitting protective clothing.
➔ Wear a hairnet to cover long hair.

Carry out the following procedures:

1. Loosen joining elements (1), outside only.

2. Tension and adjust the belt by turning the tension screws on the side of turning unit. First on the outside, then on the inside.

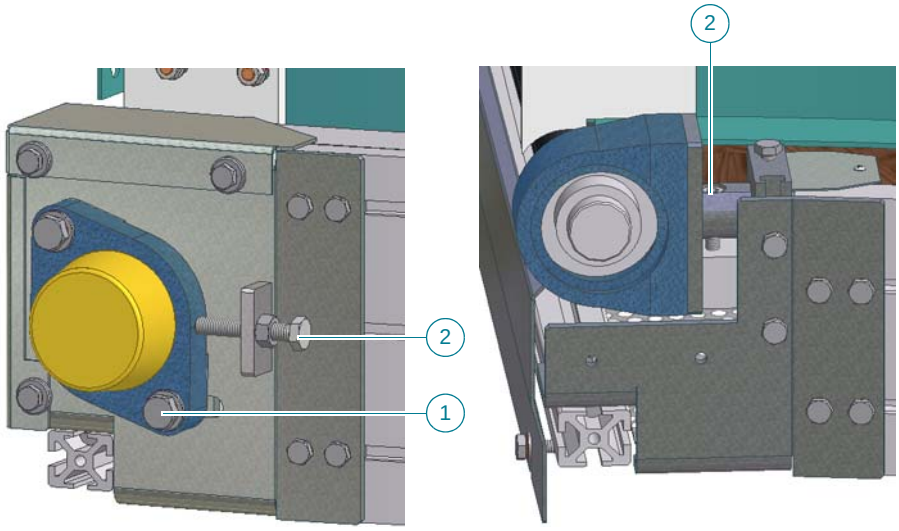

↳ The belt will have a delayed response to the adjustment. Therefore, only adjust tension screws slightly. Wait for a few running cycles before adjusting again.

3. Switch on the machine.
4. Check that the belt runs correctly.
5. Switch-off the machine.
6. Repeat steps 2 to 5 until the belt runs correctly.
7. Only adjust driving side if necessary.
8. Fasten joint elements (1).

✓ Belt has been tightened and adjusted.

➔ Mount covers on the tail pulley side

Carry out the following procedures:

1. Align and fasten finger guards (1), clearance <=5 mm.
2. Align and fasten finger plate (2), clearance <=5 mm.

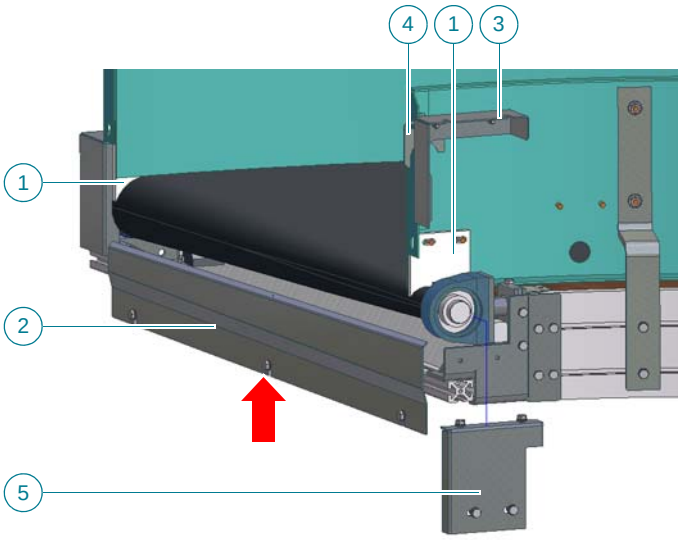

3. Mount covers (5) and (3) with finger guard (4).
4. Align finger guard (4) and fasten.

✓ Covers are mounted.

✓ Belt has been tightened and adjusted.

Replacing the gear motor

Shaft-mounted bevel wheel gear

For some maintenance and repair works the gear motor must be demounted but not exchanged. When replacing the gear motor, obtain the new gear motor according to the spare parts list and prepare it according to the manufacturer's specifications.

Precondition:

- ✓ Machine has been taken out of operation.
- ✓ Machine has been secured against accidental switch-on.
- ✓ Motor has cooled down.

➔ Demount the gear motor

WARNING

Increased risk of accident!
Motor can tilt and crush body parts.
➔ Secure the motor to prevent it falling down.
➔ Use lifting equipment to lift motor on and off.

Carry out the following procedures:

1. Remove all power supply lines from the motor.
2. Remove cap (1).
3. Remove joining elements (2).

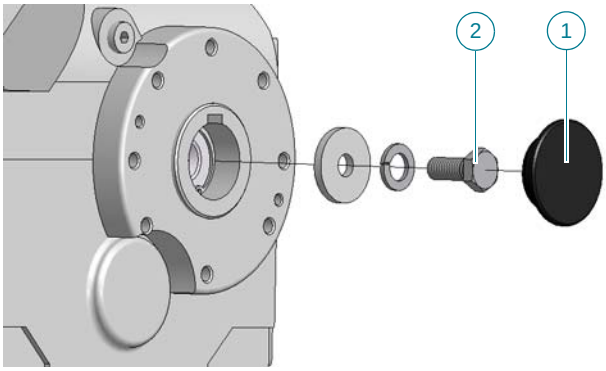

4. Loosen off joining elements (3).

5. Move off joining elements (4).

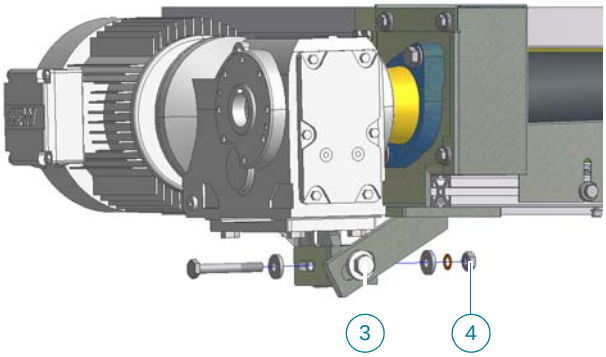

6. Unscrew gear motor with torque arm from holding device and pull off.
7. Place gear motor on suitable underlay.

✓ The gear motor has been removed.

➔ Install the gear motor

Carry out the following procedures:

1. Apply assembly paste to the pulley journal.
2. Assembly to be carried out in reverse order.

✓ Gear motor has been mounted.

✓ Gear motor has been replaced.

Shaft-mounted worm gear

For some maintenance and repair works the gear motor must be demounted but not exchanged. When replacing the gear motor, obtain the new gear motor according to the spare parts list and prepare it according to the manufacturer's specifications.

Precondition:

- ✓ Machine has been shut down.
- ✓ Machine has been secured against accidental switch-on.
- ✓ Motor has cooled down.

➔ Demount the gear motor

WARNING

Increased risk of accident!
Motor can tilt and crush body parts.
➔ Secure the motor to prevent it falling down.
➔ Use lifting equipment to lift motor on and off.

Carry out the following procedures:

1. Remove all power supply lines from the motor.
2. Remove cap (1).
3. Remove joining elements (2).

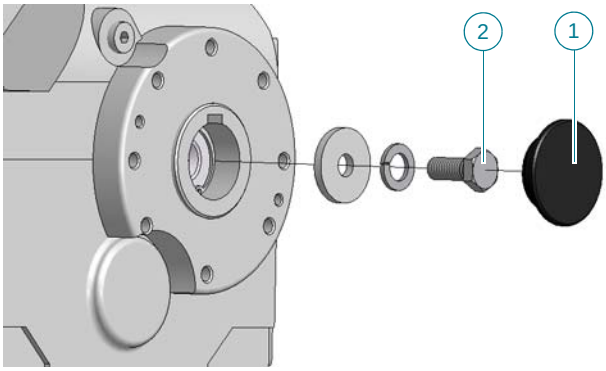

4. Loosen off joining elements (3).

5. Move off joining elements (4).

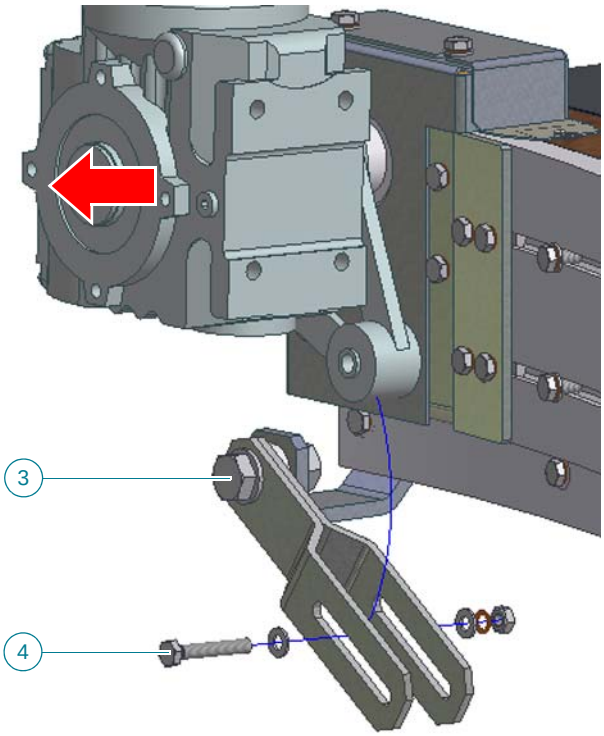

6. Slide off gear motor with torque arm.
7. Place gear motor on suitable underlay.

✓ The gear motor has been removed.

➔ Install the gear motor

Carry out the following procedures:

1. Apply assembly paste to the pulley journal.
2. Assembly to be carried out in reverse order.

✓ Gear motor has been mounted.

✓ Gear motor has been replaced.

Shaft-mounted bevel wheel gear

For some maintenance and repair works the gear motor must be demounted but not exchanged. When replacing the gear motor, obtain the new gear motor according to the spare parts list and prepare it according to the manufacturer's specifications.

Precondition:

- ✓ Machine has been taken out of operation.
- ✓ Machine has been secured against accidental switch-on.
- ✓ Motor has cooled down.

➔ Demount the gear motor

WARNING

Increased risk of accident!
Motor can tilt and crush body parts.
➔ Secure the motor to prevent it falling down.
➔ Use lifting equipment to lift motor on and off.

Carry out the following procedures:

1. Remove all power supply lines from the motor.
2. Remove cap (1).
3. Remove joining elements (2).

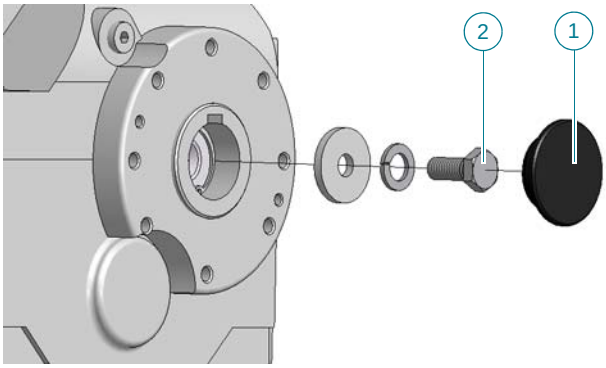

4. Remove joining elements (3).

5. Slide off gear motor with torque arm.

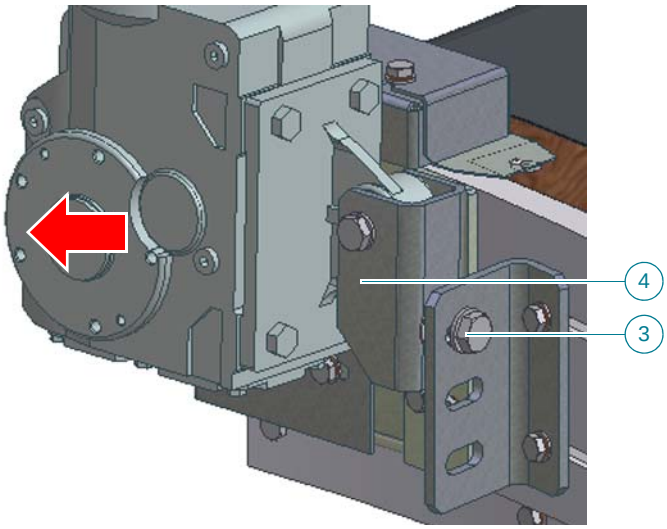

6. Place gear motor on suitable underlay.
7. Demount holder (4).

✓ The gear motor has been removed.

➔ Install the gear motor

Carry out the following procedures:

1. Apply assembly paste to the pulley journal.
2. Assembly to be carried out in reverse order.

✓ Gear motor has been mounted.

✓ Gear motor has been replaced.

In case of chain drive / toothed belt drive

For some maintenance and repair works the gear motor must be demounted but not exchanged. When replacing the gear motor, obtain the new gear motor according to the spare parts list and prepare it according to the manufacturer's specifications.

Precondition:

- ✓ Machine has been shut down.
- ✓ Machine has been secured against accidental switch-on.
- ✓ Motor has cooled down.

➔ Demount the gear motor

WARNING

Increased risk of accident!
Motor can tilt and crush body parts.
➔ Secure the motor to prevent it falling down.
➔ Use lifting equipment to lift motor on and off.

Carry out the following procedures:

1. Remove all power supply lines from the motor.
2. Move off cover (1).
3. Screw in the tension screw (2).
4. Loosen off joining elements (3), lift up motor and fasten joining elements.
5. Remove the drive chain / toothed belt (4), open the chain joint if necessary.

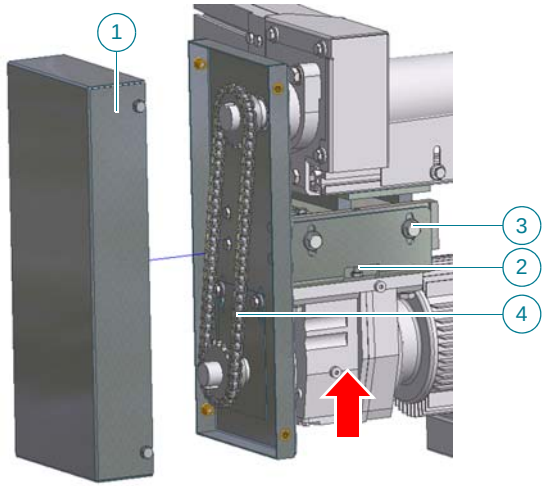

6. Loosen grub screws of sprocket wheel / toothed pulley (5) and demount sprocket wheel / toothed pulley .
7. Move off joining element (6).

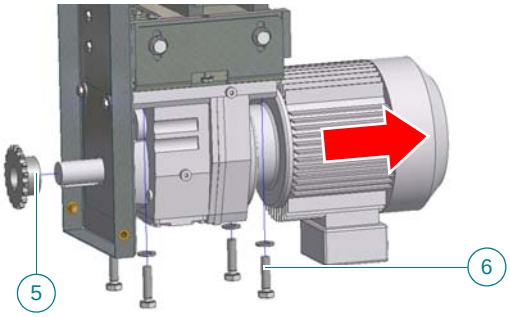

8. Remove gear motor.
9. Place gear motor on suitable underlay.

✓ The gear motor has been removed.

➔ Install the gear motor

Carry out the following procedures:

1. Apply assembly paste to the motor journal.
2. Installation is carried out in reverse order.

↳ Align and tighten chain drive / toothed belt drive.

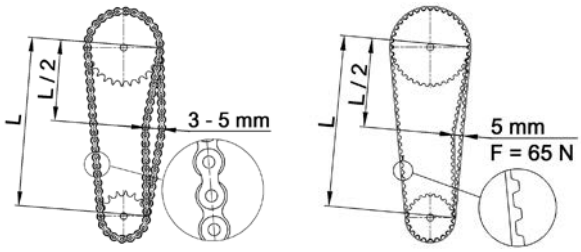

✓ Gear motor has been mounted.

✓ Gear motor has been replaced.

Replace chain drive / toothed belt drive

Precondition:

- ✓ Machine has been taken out of operation.
- ✓ Machine has been secured against accidental switch-on.
- ✓ Motor has cooled down.

➔ Demount the chain drive / toothed belt drive

Carry out the following procedures:

1. Move off cover (1).
2. Screw in the tension screw (2).
3. Loosen off joining elements (3), lift up motor and fasten joining elements.

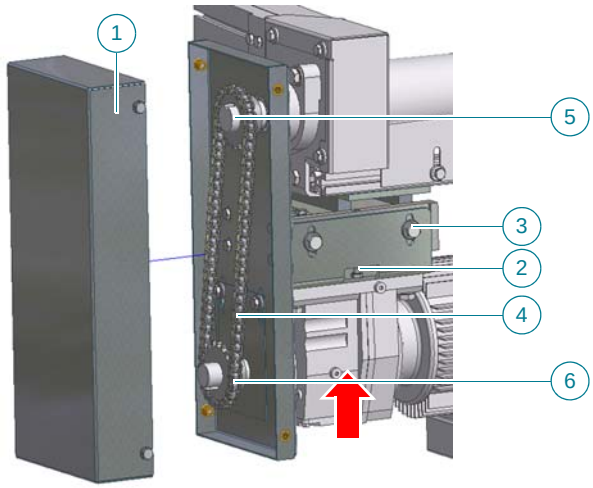

4. Remove the drive chain / toothed belt (4), open the chain joint if necessary.
5. Loosen grub screws of sprocket wheel / toothed pulley (5) and (6) and demount sprocket wheel / toothed pulley .

✓ Chain drive / toothed belt drive is demounted.

➔ Mount the chain drive / toothed belt drive

Carry out the following procedures:

1. Apply some mounting paste onto the drive shaft.

2. Installation is carried out in reverse order.
↳ Align and tighten chain drive / toothed belt drive.

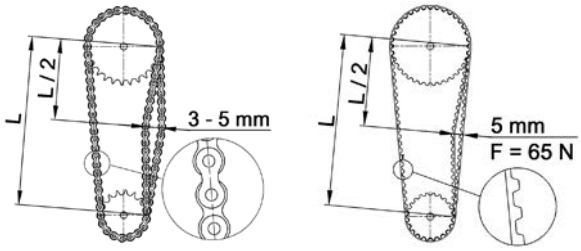

✓ Chain drive / toothed belt drive is mounted.

✓ Chain drive / toothed belt drive has been replaced.

Replacement of flange/pedestal bearing

In case of a replacement lay out the new flange bearings ready for use according to the spare parts list. Change flange bearings in pairs (inside and outside).

Precondition:

- ✓ Machine has been taken out of operation.
- ✓ Machine has been secured against accidental switch-on.
- ✓ Belt is loosened.
- ✓ Gear motor is demounted.

➔ Demount the flange bearing, outside

Carry out the following procedures:

1. Move cover (1).

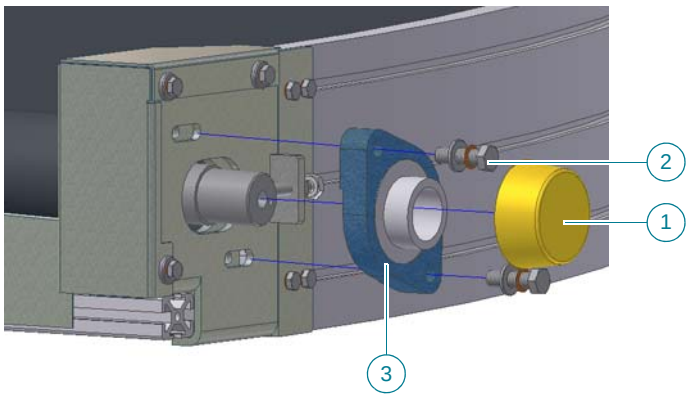

2. loosen grub screw of flange bearing.
3. Move off joining element (2).

4. Slip off flange bearing (3).

✓ Flange bearing outside is demounted.

➔ Mount the flange bearing, outside

Carry out the following procedures:

1. Slide on flange bearing (3) onto pulley journal.
2. Align flange bearing and pulley.
3. Fasten flange bearing with joining elements (2).
4. Tighten grub screw of flange bearing.
5. Mount cover (1).

✓ Flange bearing outside is mounted.

➔ Demount the pedestal bearing, inside

Carry out the following procedures:

1. Remove covers (1) and (2).

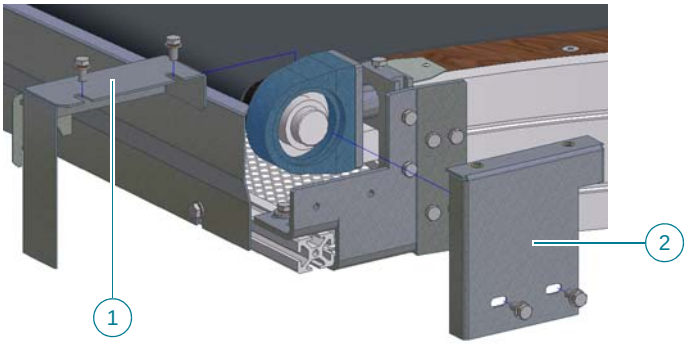

2. loosen grub screws of pedestal bearing.
3. Demount joining elements (3) and lift, turn and pull off the pulley bearing.

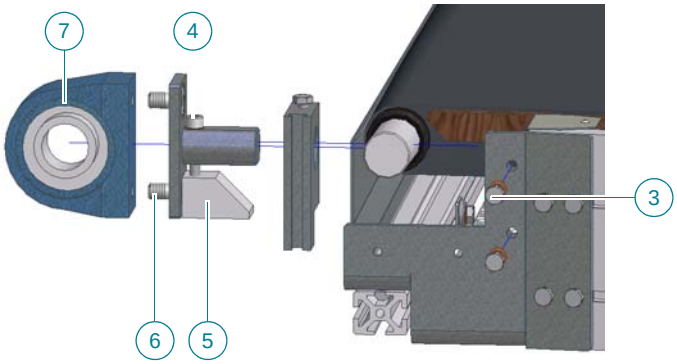

4. Remove tension screw (4) and demount tension block (5).
5. Remove screws (6).

✓ Pedestal bearing inside is demounted.

➔ Mount the inside pedestal bearing

Carry out the following procedures:

1. Mount pedestal bearing (8) on spacer plate (7).

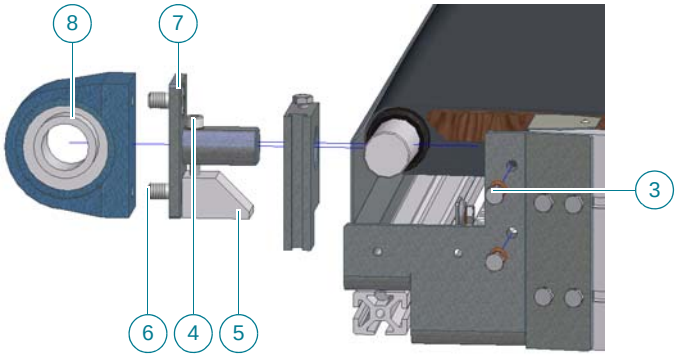

2. Tighten joining elements (6).
3. Mount tensioning block (5) with tensioning screw (4) to bearing plate.
4. Slide pulley bearing onto pulley journal and move into correct position.
5. Mount joining elements (3).
6. Tighten grub screws of pedestal bearing.

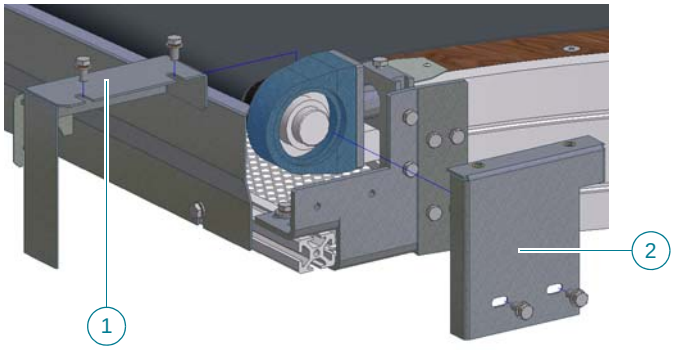

7. Remove covers (2) and (1).
8. Fasten finger guard to cover (1), realign if necessary.

✓ Pedestal bearing inside is mounted.

➔ Mount the gear motor where applicable

Carry out the following procedures:

➔ Proceed as described under "Mounting the gear motor".

✓ Gear motor has been mounted.

➔ Tighten / adjust the belt

Carry out the following procedures:

➔ Proceed as described under "Tightening / adjusting the belt"

✓ Belt has been tightened and adjusted.

✓ Flange bearing has been replaced.

Replacing drive pulley

Precondition:

✓ Machine has been taken out of operation.
✓ Machine has been secured against accidental switch-on.
✓ Side guide is demounted.
✓ Belt is loosened.
✓ Gear motor is demounted.

➔ Demount the covers

Carry out the following procedures:

1. Move off cover (1).
2. Remove finger guard (2).
3. Loosen off finger guard plate (3) on drive side.

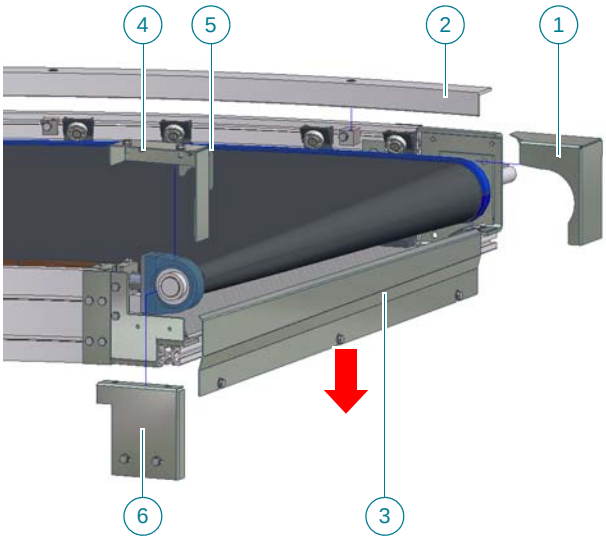

4. Remove cover (4) with finger guard (5) on drive side.
5. Remove cover (6) on drive side.

✓ Covers have been demounted.

➔ Demount the upper belt edge holders on driving side

Carry out the following procedures:

1. Turn locking lever to „open“.

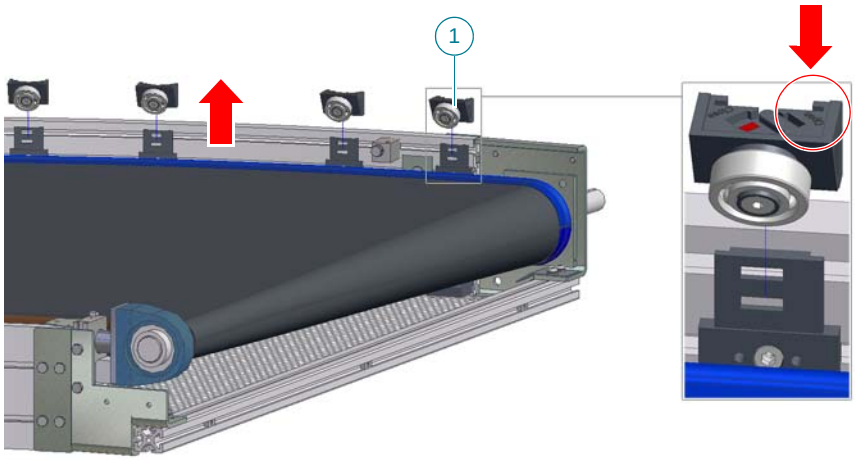

2. Pull off the upper belt edge holder parts (1) in the area of the bed.

✓ Upper belt edge holder parts on the drive side are demounted.

➔ Release the bed on the drive side

Carry out the following procedures:

➔ Move off joining elements. If the beading is divided then only on driving side.

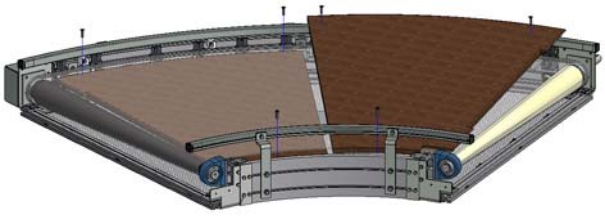

✓ Bed is released.

➔ Demount the pulley bearing inside

Carry out the following procedures:

1. loosen grub screws of pedestal bearing.
2. Remove the fasteners (1).

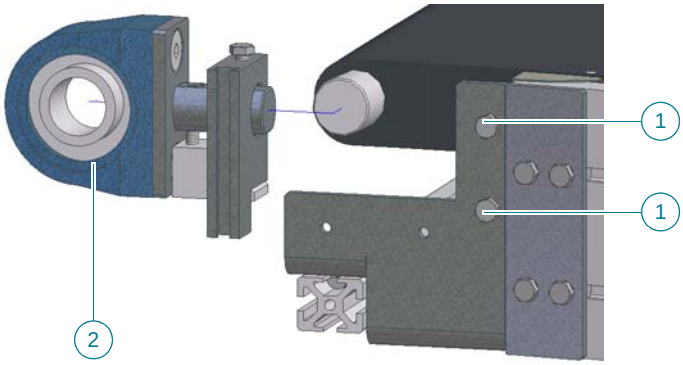

3. Lift pulley bearing (2), turn it and pull it off the pulley journal.

✓ Pulley bearing inside is demounted.

➔ Remove the drive pulley

WARNING

Increased risk of accident!
Pulley can tilt and crush body parts.
➔ Secure the pulley to prevent it falling.
➔ Use hoists to raise and lower the pulley.

Carry out the following procedures:

1. Remove cap (1).
2. Remove feather key (2).
3. Loosen grub screws (3).

4. Pull out drive pulley (4).

✓ Drive pulley has been removed.

➔ Slide in the drive pulley

WARNING

Increased risk of accident!
Pulley can tilt and crush body parts.
➔ Secure the pulley to prevent it falling.
➔ Use hoists to raise and lower the pulley.

Carry out the following procedures:

1. Slide new drive pulley (4) into belt loops and flange bearing.

2. Tighten grub screws (3).
3. Insert feather key (2).
4. Mount cover (1).

✓ Drive pulley has been slid in.

➔ Mount the pulley bearing inside

Carry out the following procedures:

1. Slide pulley bearing (2) onto pulley journal.
2. Align drive pulley and mount joining elements (1).

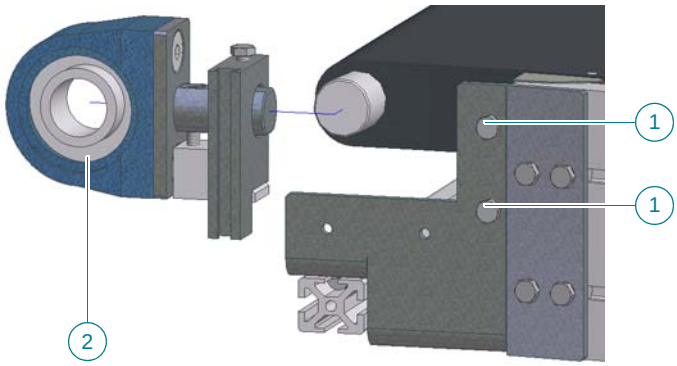

3. Tighten grub screws of pedestal bearing.

✓ Pulley bearing inside is mounted.

➔ Attach the bed on the drive side

Carry out the following procedures:

➔ Tighten joining elements. If the beading is divided then only on driving side.

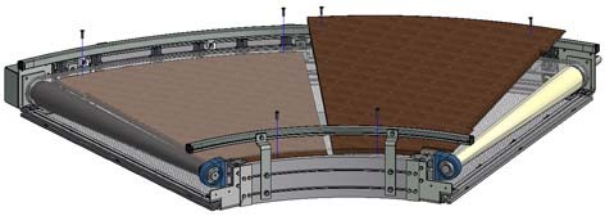

✓ Beading is fastened.

➔ Mount the upper belt edge holder parts on the drive side.

Carry out the following procedures:

1. Insert upper parts of belt edge holders (1).

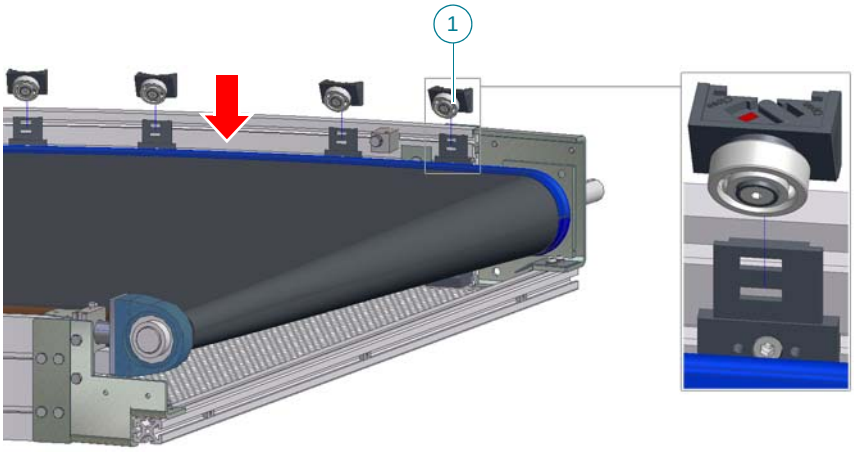

2. Check belt edge nose for correct position between ball bearings inside the holders.

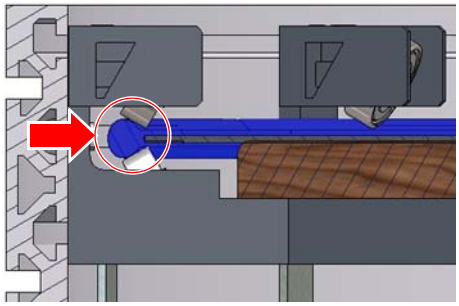

3. Turn locking lever to „close“.

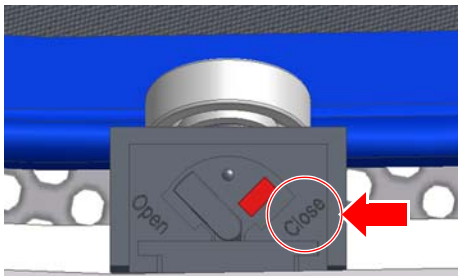

✓ Upper belt edge holder parts are mounted.

➔ Install the gear motor

Carry out the following procedures:

➔ Proceed as described under "Mounting the gear motor".

✓ Gear motor has been mounted.

➔ Tension the belt / adjust

Carry out the following procedures:

➔ Proceed as described under "Tightening / adjusting the belt"

✓ Belt is tensioned and adjusted.

➔ Mount the covers

Carry out the following procedures:

1. Mount covers (6) and (4) with finger guard (5).
2. Align finger guard (5) and fasten.
3. Align and fasten finger plate (3), clearance <=5 mm.
4. Mount angled finger guard (2).

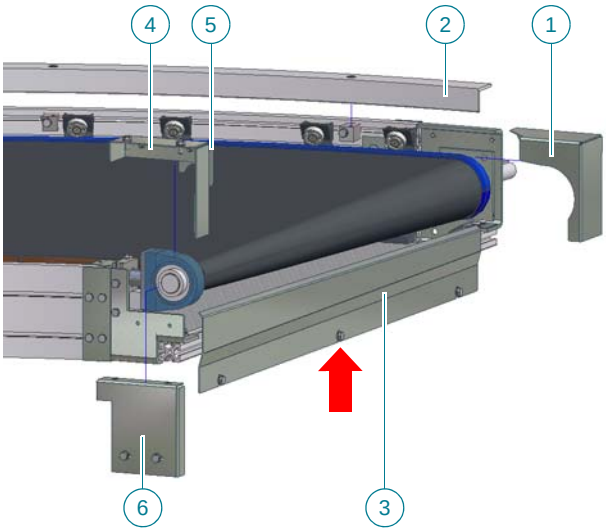

5. Mount cover (1).

✓ Covers are mounted.

➔ Mount the side guide

Carry out the following procedures:

➔ Carry out procedure as described under "Mount baggage guidance“ or "Mount tube guiding.“

✓ Side guide is installed.

✓ Drive pulley has been replaced

Replacing tail pulley

Precondition:

- ✓ Machine has been taken out of operation.
- ✓ Machine has been secured against accidental switch-on.
- ✓ Side guide is demounted.
- ✓ Belt has been slackened off.

➔ Demount the covers

Carry out the following procedures:

1. Move off cover (1).
2. Remove finger guard (2).
3. Loosen off finger guard plate (3) on tail pulley side.

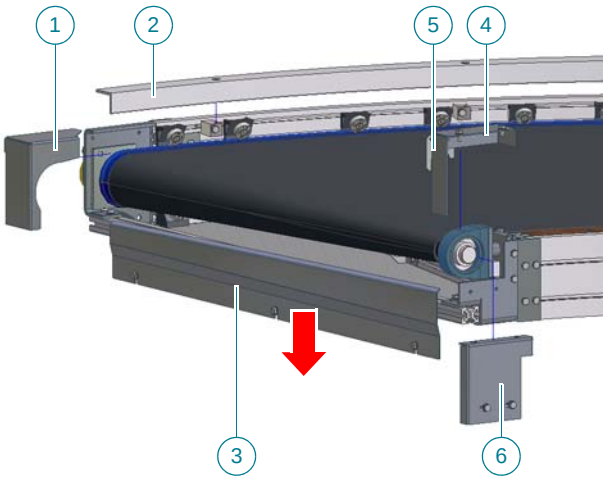

4. Remove cover (4) with finger guard (5) on tail pulley side.
5. Remove cover (6) on tail pulley side.

✓ Covers have been demounted.

➔ Demount the upper belt edge holder parts on tail pulley side

Carry out the following procedures:

1. Turn locking lever to „open“.

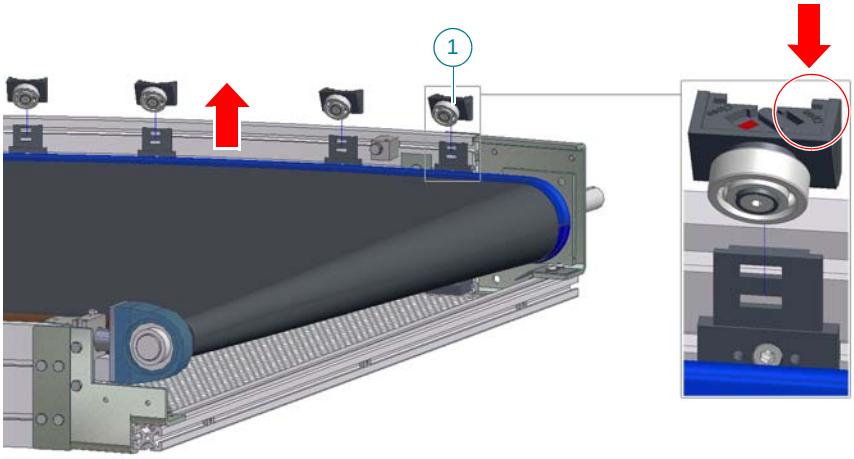

2. Pull off the upper belt edge holder parts (1) in the area of the bed.

✓ Upper belt edge holder parts on the tail pulley side are demounted.

➔ Release the bed on the tail pulley side

Carry out the following procedures:

➔ Move off joining elements. If the bed is divided, then only on the tail pulley side.

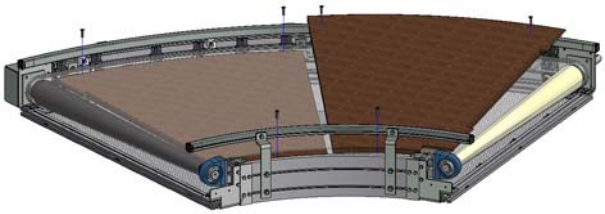

✓ Bed is released.

➔ Demount the pulley bearing inside

Carry out the following procedures:

1. loosen grub screws of pedestal bearing.
2. Remove the fasteners (1).

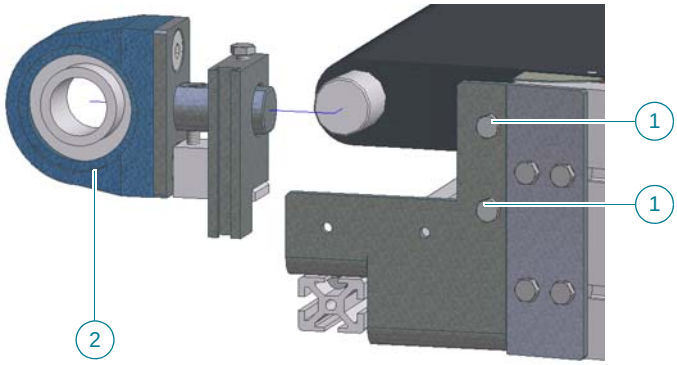

3. Lift pulley bearing (2), turn it and pull it off the pulley journal.

✓ Pulley bearing inside is demounted.

➔ Remove the tail pulley

WARNING

Increased risk of accident!
Pulley can tilt and crush body parts.
➔ Secure the pulley to prevent it falling.
➔ Use hoists to raise and lower the pulley.

Carry out the following procedures:

1. Move cover (1).
2. Loosen grub screws (2).

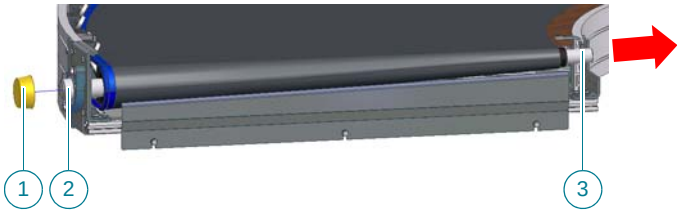

3. Slide out tail pulley (3).

✓ Tail pulley has been removed.

➔ Slide in the tail pulley

WARNING

Increased risk of accident!
Pulley can tilt and crush body parts.
➔ Secure the pulley to prevent it falling.
➔ Use hoists to raise and lower the pulley.

Carry out the following procedures:

1. Slide new tail pulley (3) into belt loops and flange bearing.

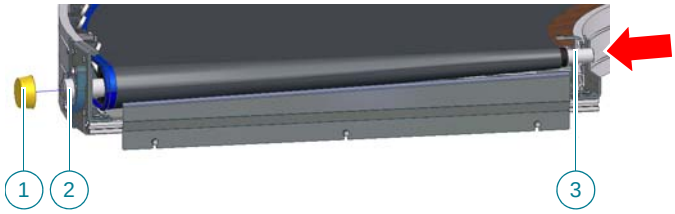

2. Tighten grub screws (2).
3. Mount cover (1).

✓ Tail pulley has been slid in.

➔ Mount the pulley bearing inside

Carry out the following procedures:

1. Slide pulley bearing (2) onto pulley journal.
2. Align tail pulley and mount joining elements (1).

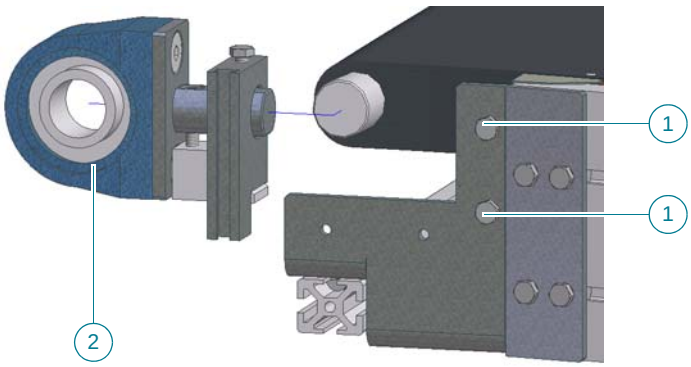

3. Tighten grub screws of pedestal bearing.

✓ Pulley bearing inside is mounted.

➔ Attach the bed on the tail pulley side

Carry out the following procedures:

➔ Tighten joining elements. If the bed is divided, then only on the tail pulley side.

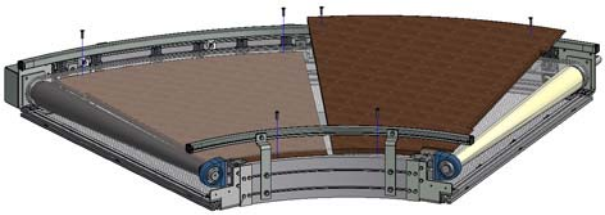

✓ Beading is fastened.

➔ Mount the upper parts of belt edge holders on tail pulley side.

Carry out the following procedures:

1. Insert upper parts of belt edge holders (1).

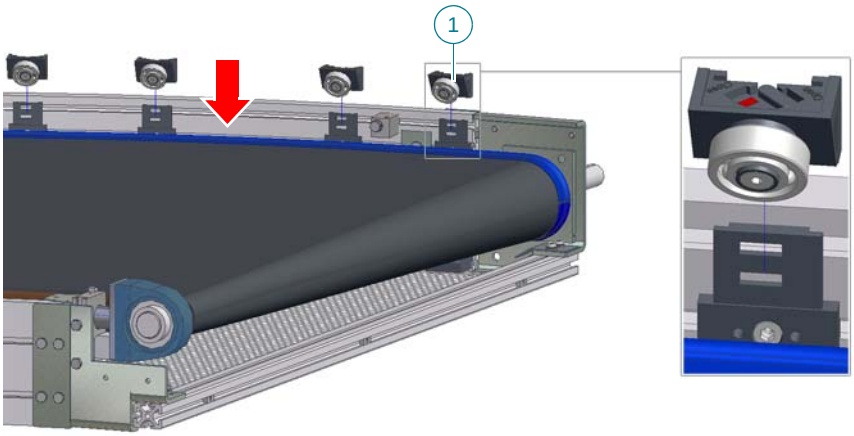

2. Check belt edge nose for correct position between ball bearings inside the holders.

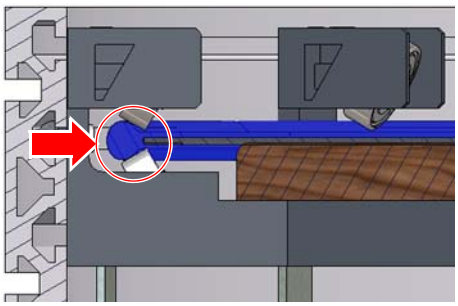

3. Turn locking lever to „close“.

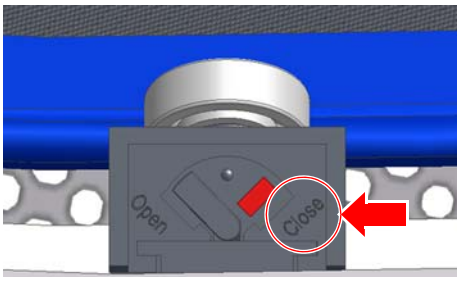

✓ Upper belt edge holder parts are mounted.

➔ Tighten / adjust the belt

Carry out the following procedures:

➔ Proceed as described under "Tightening / adjusting the belt"

✓ Belt has been tightened and adjusted.

➔ Mount the covers

Carry out the following procedures:

1. Mount covers (6) and (4) with finger guard (5).
2. Align finger guard (5) and fasten.
3. Align and fasten finger plate (3), clearance <=5 mm.
4. Mount angled finger guard (2).

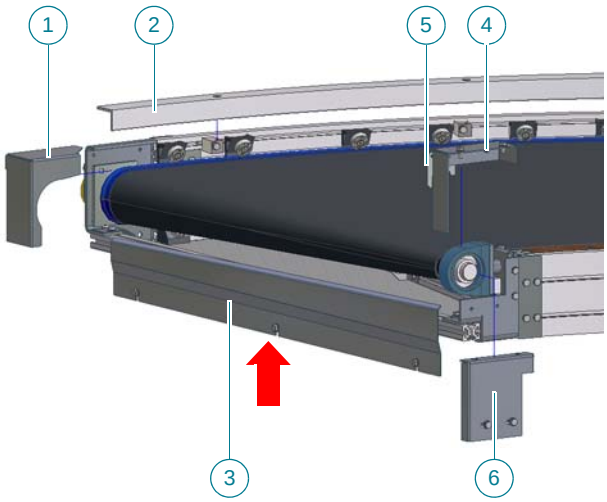

5. Mount cover (1).

✓ Covers are mounted.

➔ Mount the side guide

Carry out the following procedures:

➔ Carry out procedure as described under "Mount baggage guidance“ or "Mount tube guiding.“

✓ Side guide is installed.

✓ Tail pulley has been replaced

Replace belt edge holders

Precondition:

✓ Machine has been taken out of operation.

✓ Machine has been secured against accidental switch-on.

✓ Side guide is demounted.

✓ Belt is loosened.

✓ Belt has been removed.

➔ Demount the belt edge holders

Carry out the following procedures:

1. Demount upper parts of belt edge holders (1).
2. Remove joining elements (2).

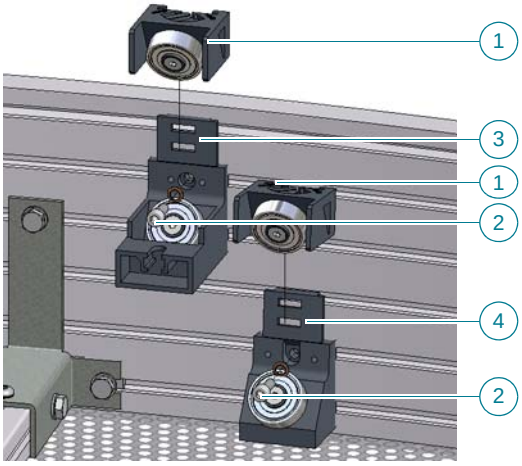

3. Take out lower parts of belt edge holders (3) from upper run and (4) lower run.

✓ Belt edge holders are demounted.

➔ Mount the belt edge holders

Carry out the following procedures:

1. Align lower parts of belt edge holders (3) in upper run and (4) lower run.
2. Tighten joining elements (2).
3. Mount upper parts of belt edges later.

✓ Belt edge holders are mounted.

➔ Install the belt

Carry out the following procedures:

➔ Carry out work steps as described under „belt exchange“ starting from „insert belt“.

↳ Upper belt edge holder parts are mounted.
↳ Belt has been tensioned and adjusted.
↳ Side guide is mounted.

✓ Belt is mounted.

✓ Belt edge holders have been exchanged.

Fault clearance

This section informs you what to do if a malfunction occurs. A disturbance can have various different causes.

For instructions on the respective fault clearances that may be carried out by technical personnel as defined under "Personnel qualification", please refer to the section "Fault clearance". It is essential to observe the safety instructions within the respective section.

What to do if...

Mechanical malfunctions

Detected disturbance	Possible cause	Remedial action
Machine shuts down	Power supply disrupted, fault message displayed	Have technical personnel establish and eliminate the problem
	Motor defect	Replace motor
Machine shutdown with running motor	Drive chain, drive belt ripped	Replace drive chain, drive belt
	Pulley journal is broken	Replace pulley
	Belt tension is too low	Tension and adjust belt
Stagnant belt run	Belt tension is too low	Tension and adjust belt
	Belt edge damaged	Replace belt
	Belt is blocked by foreign particles	Remove foreign particles
Belt jumps out of edge holders	Incorrect belt adjustment	Tighten and adjust belt
Belt bulging	Belt overstressed or incorrectly tensioned	Tighten and adjust belt, If necessary replace belt
Belt generates grinding noise	Belt rubs on edges of the bed	Tension and adjust belt
		Align bed
		Readjust drive pulley / pulley
Noise development / leakage on pulley bearings	Pulley journal turns in internal ring of bearing Bearing defective	Replace bearing, Replace pulley if necessary

Mechanical malfunctions (cont'd.)

Detected disturbance	Possible cause	Remedial action
Noise development / Leakage on belt edge holders	Belt edge holders / bearings defective	Replace belt edge holders
Noise development on chain drive	Drive chain is not tensioned correctly	Tighten drive chain
	Sprocket wheels / chain worn	Replace sprocket wheels / chain

Motor and gear

Should the drive motor have a disturbance, please refer to the operating instructions of the motor for information on fault clearance.

The operating instructions of the motor are part of the installation.

Decommissioning and waste disposal

Machine disposal

Please comply with local regulations on waste disposal when disposing of the entire machine or parts of it. The regulations will tell you if the machine has to be dismantled for disposal, and to what extent, and how the individual components can be supplied for recycling.

Also observe the instructions for information regarding the individual components of the machine.

Carry out the following procedures:

1. Put the machine out of operation and disconnect from electrical power supply.
2. Drain and dispose of all consumable materials.
3. Dismantle the machine according to the guidelines and regulations valid in the country of use.

✓ The machine has been disposed of.

Main components of the machine

The following table provides information on the different construction materials generally found in machine's main components.
Actual materials may vary depending on the individual design.

Main components of the machine

Machine parts	Material
Cover	Aluminium plate Steel plate
Bed	Wood Polyethylene (PE) (Stainless) steel
Drive belt, conveyor belt	Polyurethane (PUR) Polyvinyl chloride (PVC)
Conveyor roller	Plastic Steel
Gear motor	Cast iron Copper Steel
Base frame, support	Aluminium Steel
Pulley	Steel Polyurethane (PUR) coated steel

Contact details

In the event of uncertainty or problems during installation, maintenance, repair or operation of the machine, please first consult the corresponding section of the operating instructions.
If this information does not solve your problem, please contact TRANS-NORM SYSTEM GmbH.

Head office

Germany

TRANSNORM SYSTEM GmbH

Förster Str. 2

D-31177 Harsum

Tel.: +49 (0) 5127 4020

Fax: +49 (0) 5127 4400

E-mail: info@transnorm.de
Web:http://www.transnorm.com

Subsidiaries, branch offices and sales partners worldwide

Subsidiaries

United Kingdom	USA
TRANSNORM SYSTEM Ltd.	TRANSNORM SYSTEM Inc.
Unit 2, Bredon Court Brockeridge Park, Twyning, Tewkesbury	2810 Avenue E East
Gloucestershire GL20 6FF	76011 Arlington, Texas
+44 (0) 16 84 29 11 00	+1 (0) 97 26 06 03 03
Fax: +44 (0) 16 84 29 15 50	Fax: +1 (0) 97 26 06 07 68
E-mail: sales@transnorm.co.uk	E-mail: sales@transnorm.com

Thailand	Malaysia
TRANSNORM SYSTEM Co. Ltd.	TRANSNORM SYSTEM Sdn. Bhd
222/1-4 Moo 5 Ban Rakat Sub-District, Bang Bo District	7, Jalan 1/5 Taman Kluang Indah
10560 Samut Prakan Province	86000 Kluang Johor Darul Takzim
Tel.: +66 (0) 20 30 98 20	Tel.: +60 (0) 77 77 19 17
Fax: +66 (0) 20 30 98 49	Fax: +60 (0) 77 77 19 28
E-mail: sales@transnorm.asia	E-mail: info@transnorm.com.my

China
TRANSNORM SYSTEM (SHANGHAI) CO., Ltd.
Shangcheng RD 738 Room 1004
2001120 Shanghai, China
Tel.: +86 (021) 61 62 55 60
Fax: +86 (021) 61 62 55 63
E-mail: sales@transnorm.asia

Branches

Netherlands	France
TRANSNORM SYSTEM GmbH	TRANSNORM SYSTEM GmbH
Sales Unit Benelux	Bureau France Bâtiment B - Paris Nord 2
Grachtweg 23B	69, Rue de la Belle Etoile
4301 KJ Zierikzee	95940 Roissy Charles de Gaulle Cedex
Tel.: +31 (0) 1 11 41 00 90	Tel.: +33 (0) 1 48 63 70 61
Fax: +31 (0) 1 11 45 12 88	Fax: +33 (0) 1 48 63 05 62
E-mail: sales.nl@transnorm.de	E-mail: eric.cornec@transnorm.de

Sales partners

Denmark	Switzerland
Nerak A/S.	Frei Fördertechnik AG
Christian 8.s Vej 32	Schwarzbachstraße 26
8600 Silkeborg	3113 Rubigen
Tel.: +45 (0) 70 26 50 04	Tel.: +41 (0) 3 17 20 56 56
Fax: +45 (0) 70 23 50 04	Fax: +41 (0) 3 17 20 56 55
E-mail: nerak@email.dk	E-mail: info@ffag.ch

Spain	United Arab Emirates
J. Hernando	SVS Engineering Services (L.L.C.)
c/ Iplacea n°6 Poligono Industrial Las Matillas	P.O. Box 251755
28803 Alcalá de Henares (Madrid)	Dubai
Tel.: +34 (0) 9 18 79 62 86	Tel.: +971 (0) 42 38 25 33
Fax: +34 (0) 9 18 79 78 70	Fax: +971 (0) 65 45 63 65
E-mail: info@jhernando.com	E-mail: svsengg@emirates.net.ae

Service branches - Germany

Service branch - North	Service branch - Central
Manfred Fernandez	Frank Bernutz
Tel.: 0 41 82 / 28 53 99	Tel.: 0 50 31 / 9 02 03 20
Mobile: 01 72 / 51 00 976	Mobile: 01 72 / 43 82 507
Fax: 0 41 82 / 28 55 52	Fax: 0 50 31 / 9 02 03 21

Service branch - West	Service branch - South
Saverio Gadaleta	Marko Kilank
Tel.: 0 21 73 / 93 82 48	Tel.: 0 71 43 / 96 46 68
Mobile: 01 72 / 97 12 877	Mobile: 01 72 / 43 82 446
Fax: 0 21 73 / 93 82 76	Fax: 0 71 43 / 96 58 51

Suggestions and information

...on this documentation or the machine should be sent to the first address listed above.

Other ManualsLib Projects

www.manualslib.com

www.manualslib.de

www.manualslib.es

www.manualslib.fr

www.manualslib.nl

www.manualslib.mx

www.manualslib.tech 30+ Languages