Lakshya JEE 2.0 (2025)

Physics

DPP: 9

Electric Charges and Fields

Q1 A point charge $+q$ is placed at the centre of a cube of side L. The electric flux emerging from the cube is

(A) $\frac{q}{\varepsilon_0}$

(B) Zero

(C) $\frac{6qL^2}{\varepsilon_0}$

(D) $\frac{q}{6L^2\varepsilon_0}$

Q2 A charge q is placed at the centre of the open end of cylindrical vessel. The flux of the electric field through the surface of the vessel is

(A) Zero

(B) $\frac{q}{\varepsilon_0}$

(C) $\frac{q}{2\varepsilon_0}$

(D) $\frac{2q}{\varepsilon_0}$

Q3 It is not convenient to use a spherical Gaussian surface to find the electric field due to an electric dipole using Gauss's theorem because

(A) Gauss's law fails in this case

(B) This problem does not have spherical symmetry

(C) Coulombs law is more fundamental than Gauss's law

(D) Spherical Gaussian surface will alter the dipole moment

Q4 According to Gauss's Theorem, electric field of an infinitely long straight wire is proportional to

(A) r

(B) $\frac{1}{r^2}$

(C) $\frac{1}{r^3}$

(D) $\frac{1}{r}$

Q5 Electric charge is uniformly distributed along a long straight wire of radius $1\ \mathrm{mm}$. The charge per cm length of the wire is Q coulomb. Another cylindrical surface of radius $50\ \mathrm{cm}$ and length $1\ \mathrm{m}$ symmetrically encloses the wire as shown in the figure. The total electric flux passing through the cylindrical surface is

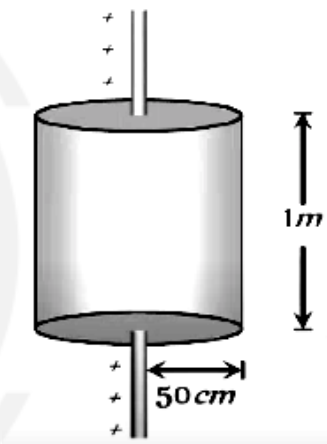

(A) $\frac{Q}{\varepsilon_0}$

(B) $\frac{100Q}{\varepsilon_0}$

(C) $\frac{10Q}{(\pi\varepsilon_0)}$

(D) $\frac{100Q}{(\pi\varepsilon_0)}$

Q6 Gauss's law should be invalid if

(A) There were magnetic monopoles

(B) The inverse square law were not exactly true

(C) The velocity of light were not a universal constant

(D) None of these

Q7 Electric field at a point is constant for

(A) An electric dipole
(B) A point charge
(C) A plane infinite sheet of charge
(D) A line charge of infinite length

Q8 Total electric flux coming out of a unit positive charge put in air is
(A) ε_0
(B) ε_0^{-1}
(C) $(4\pi\varepsilon_0)^{-1}$
(D) $4\pi\varepsilon_0$

Q9 A point charge of $+12\mu\mathrm{C}$ is at a distance $6\ \mathrm{cm}$ vertically above the centre of a square of side 12 cm as shown in figure. The magnitude of the electric flux through the square will be _____ $\times 10^3\ \mathrm{Nm}^2/\mathrm{C}$

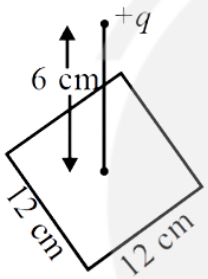

Q10 A charge q is placed at one corner of a cube as shown in figure. The flux of electrostatic field $\vec{E}$ through the shaded area is:

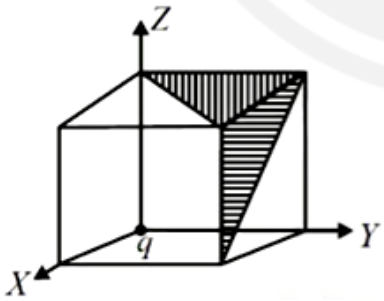

(A) $\frac{q}{4\varepsilon_0}$
(B) $\frac{q}{24\varepsilon_0}$
(C) $\frac{q}{48\varepsilon_0}$
(D) $\frac{q}{8\varepsilon_0}$

Answer Key

Q1	(A)	Q6	(B)
Q2	(C)	Q7	(C)
Q3	(B)	Q8	(B)
Q4	(D)	Q9	226
Q5	(B)	Q10	(B)

Android App | iOS App | PW Website