MULTIVIBRATORS

The multivibrator is a relaxation oscillator generating non sinusoidal waveforms. Multivibrators are classified as bistable, astable, and monostable.

The astable or the free-running multivibrator alternates automatically and continuously betn. two states at a rate dictated by the circuit components.

The bistable multivibrator, also referred to as a flip-flop, operates in two states but requires an external trigger pulse to change from one state of operation to the other. The circuit continues in the existing state till a trigger pulse is applied.

The monostable multivibrator, also known as a single-shot, a single swing or a one-shot multivibrator, has a normal or a quiescent state and a transient state. When an external trigger pulse is applied, the circuit goes over to the transient state from the the quiescent state, and automatically returns to its initial quiescent state after a time interval determined by the circuit components.

The 555 Timer

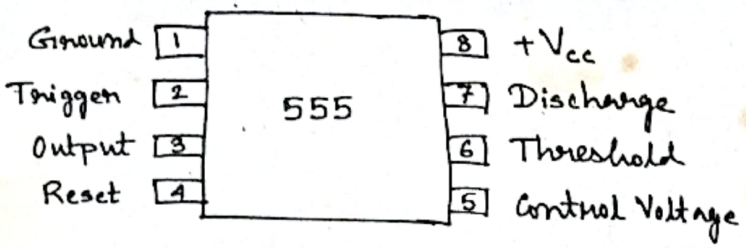

Fig.1 : The 555 Timer Connection Diagram

The device has been used in a number of useful applications:

(i) Monostable and Astable multivibrators

(ii) dc-dc converter

(iii) digital logic probe

(iv) waveform generators

(v) Voltage ~~Re~~ Regulators

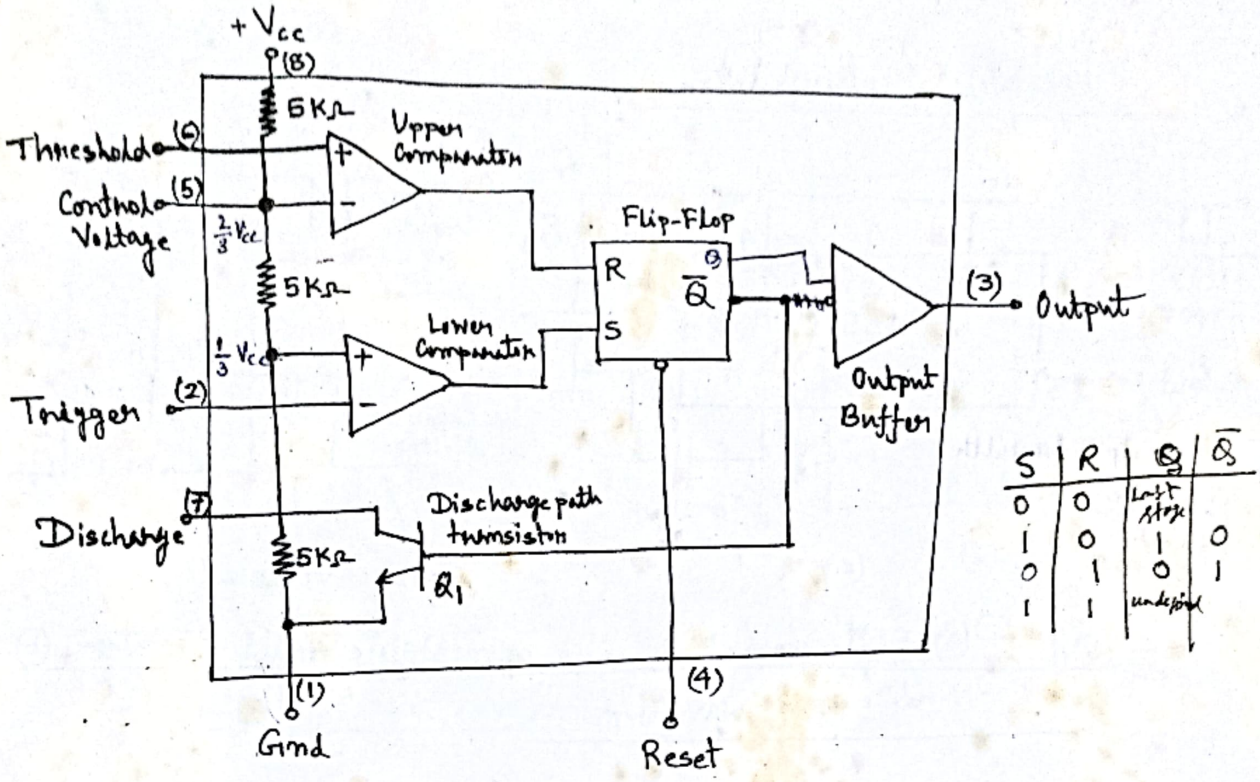

S	R	Q	$\bar{Q}$
0	0	Last stage	
1	0	1	0
0	1	0	1
1	1	undefined	

Fig. 2 : Internal Diagram of a 555 timer

The 555 timer consists basically of two comparators, a flip-flop, a discharge transistor, and a voltage divider, as shown in Fig. 2. The resistive voltage divider is used to set the voltage comparator levels. All three resistors are of equal value, thus the upper comparator has a reference of $+\frac{2}{3}V_{cc}$ and the lower comparator has a reference of $+\frac{1}{3}V_{cc}$. The comparators outputs control the state of the flip-flop. When the trigger voltage goes below $\frac{1}{3}V_{cc}$, the flip-flop sets and the output jumps to its high level. The threshold input is normally connected to an external RC timing circuit. When the external capacitor voltage exceeds $\frac{2}{3}V_{cc}$, the upper comparator resets the flip-flop, which in turn switches the output back to its low level. When the device output is low, the discharge transistor is turned ON and provides a path for rapid discharge of the external timing capacitor. This basic operation allows the timer to be configured with external components as an oscillator, a one shot or a time delay element.

S	R	$\bar{Q}$	Q
0	0	⇐ Hold Last stage	
1	0	0	
0	1	1	

Monostable Multivibrator

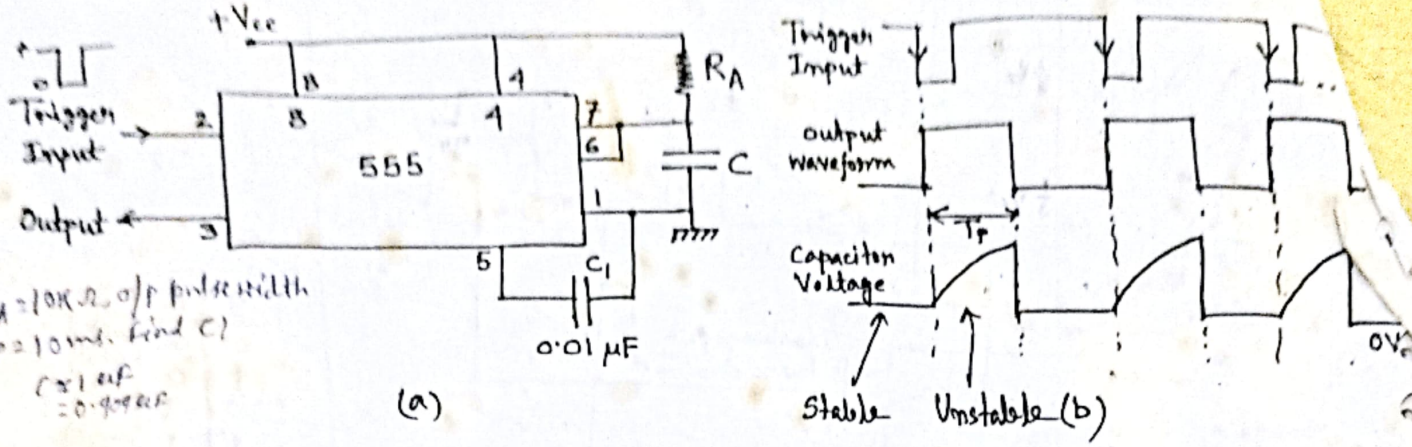

$R_A = 10K\Omega$, o/p pulse width $t_p = 10$ ms. find C)
$C = 1\,\mu F$
$= 0.909\,\mu F$

Fig. 3: (a) 555 connected as a monostable multivibrator. (b) Input and output waveforms

In the standby state, FF holds transistor Q_1 ON, thus clamping the external timing capacitor C to ground. The output remains at ground potential, i.e., LOW. As the trigger passes through $\frac{V_{cc}}{3}$, the FF is set, i.e., $\bar{Q} = 0$. This makes the transistor Q_1 OFF and the short circuit across the timing capacitor C is released. As $\bar{Q}$ is LOW, output goes HIGH ($=V_{cc}$). The timing cycle now begins. Since C is unclamped, voltage across it rises exponentially through R_A towards V_{cc} with a time constant R_AC.

After a time period T_P, the capacitor voltage is just greater than $\frac{2}{3}V_{cc}$ and the upper comparator resets the FF, i.e., R=1, S=0. This makes $\bar{Q} = 1$, transistor Q_1 goes ON, thus discharging the capacitor C rapidly to ground potential. The output of the monostable remains ~~high~~ low until a trigger pulse is again applied. Then the cycle repeats. The pulse width of the trigger input must be smaller than the expected pulse width of the output waveform. Also, trigger pulse must be a negative going input signal with an amplitude larger than $\frac{1}{3}V_{cc}$.

The voltage across the capacitor $V_c(t) = V_{cc}(1 - e^{-t/R_AC})$

At $t = T_P$, $V_c(t) = \frac{2}{3}V_{cc}$ $\quad \therefore \frac{2}{3}V_{cc} = V_{cc}(1 - e^{-T_P/R_AC})$

$\frac{2}{3} = 1 - e^{-T_P/R_AC}$

$e^{-T_P/R_AC} = \frac{1}{3}$

$e^{T_P/R_AC} = 3$

$T_P = R_AC \ln(3)$
$= 1.09 R_AC = 1.1 R_AC$

$\Rightarrow T_P = R_AC \ln(1/3)$

$\Rightarrow \boxed{T_P = 1.1 R_AC}$ ——— (1)

Astable Multivibrator

$R_A = 2.2\,k\Omega$, $R_B = 3.9\,k\Omega$ and $C = 0.1\,\mu F$. Determine the pulse width t_c, and pulse width t_d & the resonating freq. f_0 ?

$t_c = 0.429\,ms$

$t_d = 0.269\,ms$.

$f_0 = \frac{1}{t_c + t_d}$

$= 1.45\,kHz$.

$D = 61\%$.

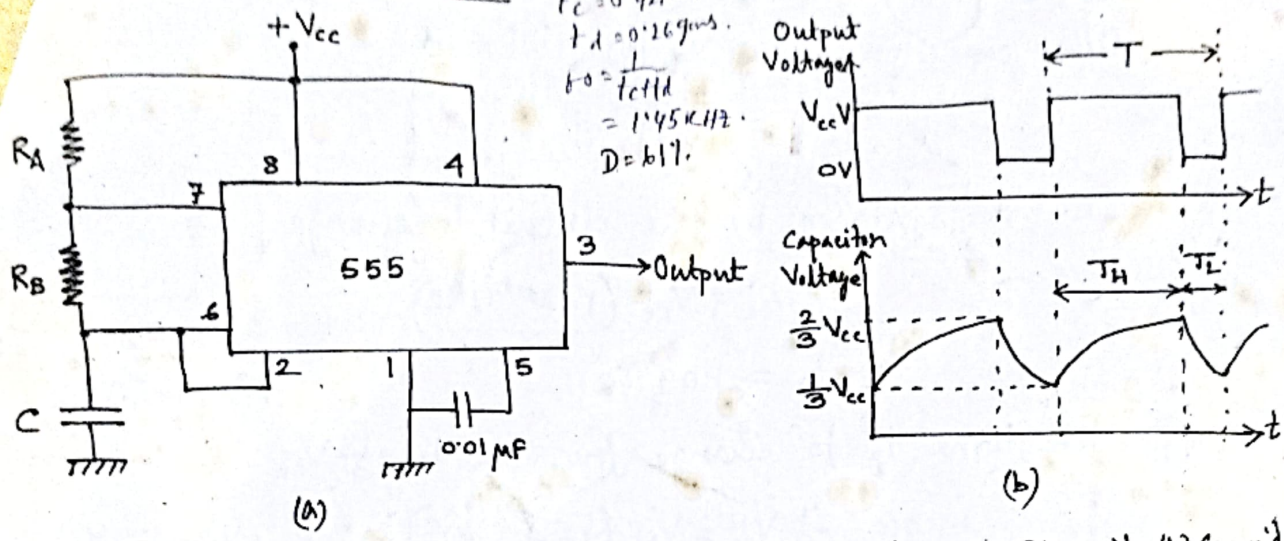

Fig. 4: The 555 as an astable multivibrator. (a) Circuit (b) Capacitor and output voltage waveforms

Initially when the output is high, capacitor C starts charging towards V_{cc} through R_A and R_B. During this time, $R=0$ and $S=1$ and this combination makes $\bar{Q}=0$ which has unclamped the timing capacitor C.

When the capacitor voltage equals, $\frac{2}{3}V_{cc}$ the upper comparator triggers the control FF so that $\bar{Q}=1$. This, in turn, makes transistor Q_1 ON and capacitor C starts discharging towards ground through R_B and transistor Q_1 with a time constant R_BC. Current also flows into transistor Q_1 through R_A. Resistors R_A and R_B must be large enough to limit this current and prevent damage to the discharge transistor Q_1. The minimum value of R_A is approximately equal to $V_{cc}/0.2$ where 0.2A is the maximum current through the on ~~trans~~ transistor Q_1.

$R=0$, $S=0$

During the discharge of the capacitor C, as it reaches $\frac{1}{3}V_{cc}$, the lower comparator is triggered and at this stage $S=1$, $R=0$, which turns $\bar{Q}=0$. Now $\bar{Q}=0$ unclamps the external capacitor C. The capacitor C is thus periodically charged and discharged bet. $\frac{2}{3}V_{cc}$ and $\frac{1}{3}V_{cc}$.

The capacitor voltage $V_c(t)$ is given by

$$V_c(t) = V_{cc}\left(1 - e^{-t/CR}\right)$$

The time t_1 taken by the circuit to charge from 0 to $\frac{2}{3}V_{cc}$

$$\frac{2}{3}V_{cc} = V_{cc}.\left(1 - e^{-t_1/RC}\right)$$

$$\Rightarrow t_1 = 1.09\,RC$$

the time t_2 to charge from 0 to $\frac{1}{3}V_{cc}$ is

$$\frac{1}{3}V_{cc} = V_{cc}\left(1 - e^{-t_2/RC}\right)$$

$$\Rightarrow t_2 = 0.405\,RC$$

$$V_c = V_f + (V_i - V_f).e^{-\frac{t}{RC}}$$

$$\Rightarrow \frac{2}{3}V_{cc} = V_{cc} + \left(\frac{1}{3}V_{cc} - V_{cc}\right).e^{-\frac{t}{RC}}$$

$$\Rightarrow \frac{2}{3}V_{cc}.e^{-\frac{t}{RC}} = \frac{1}{3}V_{cc}$$

$$\Rightarrow e^{t/RC} = 2$$

$$\Rightarrow t = RC\ln 2$$

$\therefore$ The time to charge from $\frac{1}{3}V_{cc}$ to $\frac{2}{3}V_{cc}$ is

$$t_H = t_1 - t_2 = 0.69\,RC$$

For the given circuit, $t_H = 0.69\,(R_A + R_B).C$ ——— (1)

When the capacitor discharges from $\frac{2}{3}V_{cc}$ to $\frac{1}{3}V_{cc}$,

$$\frac{1}{3}V_{cc} = \frac{2}{3}V_{cc}.e^{-t/RC}$$

$$\Rightarrow t = 0.69\,RC$$

For the given circuit, $t_L = 0.69\,R_B C$ ——— (2)

$$\therefore T = t_L + t_H = 0.69\,(R_A + 2R_B).C \quad \text{——— (3)}$$

$$\therefore f = \frac{1}{T} = \frac{1.45}{(R_A + 2R_B).C} \quad \text{——— (4)}$$

$$\text{Duty cycle } D = \frac{t_H}{T} \times 100\% = \frac{R_A + R_B}{R_A + 2R_B} \times 100\% \quad \text{——— (5)}$$

So, the duty cycle is always greater than 50%.

According to eqn. (5), the astable multivibrator shown in Fig. (4) will not produce any square wave output (duty cycle 50%) unless the resistance $R_A = 0$. There is a danger in shorting resistance R_A to zero. With $R_A = 0\,\Omega$, terminal 7 is connected directly to $+V_{cc}$. When the capacitor discharges through R_B and Q_1 (pin 7), an extra current is supplied to Q_1 by V_{cc} through a short betn. terminal 7 and $+V_{cc}$, which may damage Q_1 and hence the timer.

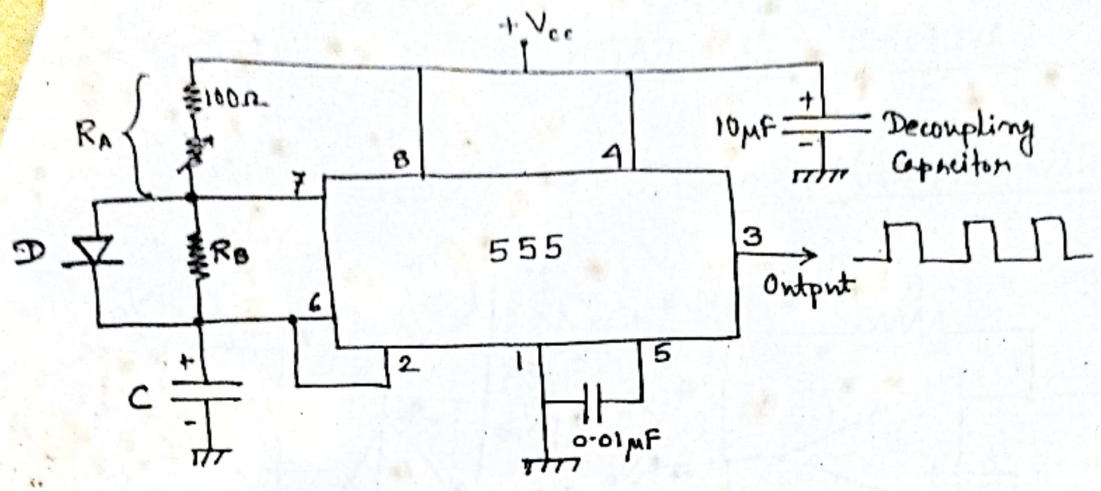

Fig. 5 : Astable multivibrator as a square wave oscillator

Without reducing $R_A = 0\Omega$, astable multivibrator can be used to produce a square wave output simply by connecting diode D across resistor R_B, as shown in Fig. 5. The capacitor C charges through R_A and diode D to approximately $+\frac{2}{3}V_{cc}$ and discharges through R_B and terminal 7 until the capacitor voltage equals approximately $\frac{1}{3}V_{cc}$ and then the cycle repeats.

$$t_H = 0.69 R_A C \qquad t_L = 0.69 R_B C$$

$$\therefore T = 0.69 (R_A + R_B) \cdot C$$

$$\therefore D = \frac{t_H}{T} \times 100\% = \frac{R_A}{R_A + R_B} \times 100\% \quad \text{——— (6)}$$

If $R_A = R_B$, 50% duty cycle is achieved.

To obtain a square wave output, R_A must be a combination of a fixed resistor and potentiometer so that the potentiometer can be adjusted for the exact square wave.