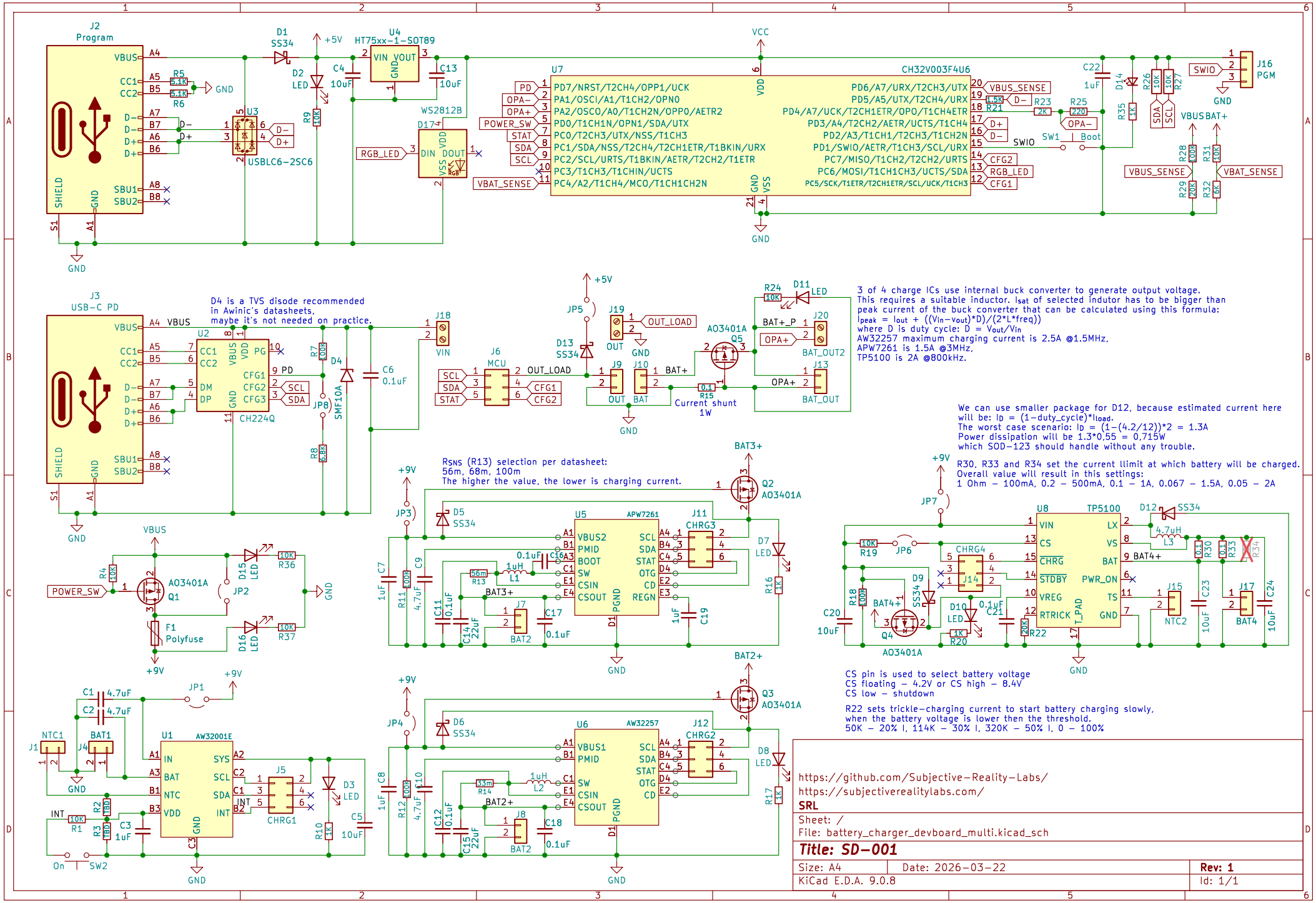
J2
Program
VBUS
CC1
CC2
D−
D+
SHIELD
GND
SBU1
SBU2
S1
A1
R5 5.1K
R6 5.1K
GND
D1
SS34
+5V
D2
LED
R9 10K
U3
USBLC6−2SC6
C4
10uF
U4
HT75xx−1−SOT89
VIN VOUT
GND
C13
10uF
WS2812B
D17
RGB_LED
DIN DOUT
VDD
VSS
VCC
U7
CH32V003F4U6
PD7/NRST/T2CH4/OPP1/UCK
PA1/OSCI/A1/T1CH2/OPN0
PA2/OSCO/A0/T1CH2N/OPP0/AETR2
PD0/T1CH1N/OPN1/SDA/UTX
PC0/T2CH3/UTX/NSS/T1CH3
PC1/SDA/NSS/T2CH4/T2CH1ETR/T1BKIN/URX
PC2/SCL/URTS/T1BKIN/AETR/T2CH2/T1ETR
PC3/T1CH3/T1CHIN/UCTS
PC4/A2/T1CH4/MCO/T1CH1CH2N
PD6/A7/URX/T2CH3/UTX
PD5/A5/UTX/T2CH4/URX
PD4/A7/UCK/T2CH1ETR/OPO/T1CH4ETR
PD3/A4/T2CH2/AETR/UCTS/T1CH4
PD2/A3/T1CH1/T2CH3/T1CH2N
PD1/SWIO/AETR/T1CH3/SCL/URX
PC7/MISO/T1CH2/T2CH2/URTS
PC6/MOSI/T1CH1CH3/UCTS/SDA
PC5/SCK/T1ETR/T2CH1ETR/SCL/UCK/T1CH3
PD
OPA−
OPA+
POWER_SW
STAT
SDA
SCL
VBAT_SENSE
VBUS_SENSE
D−
D+
CFG2
RGB_LED
CFG1
R21 1.5K
R23 2K
R25 220
OPA−
SW1
Boot
SWIO
C22
1uF
D14
R35 1K
R26 10K
R27 10K
J16
PGM
VBUS
BAT+
R28 100K
R29 20K
R31 10K
R32 6K
J3
USB−C PD
D4 is a TVS disode recommended
in Awinic's datasheets,
maybe it's not needed on practice.
U2
CH224Q
CC1
CC2
VBUS
VDD
PG
DM
DP
GND
CFG1
CFG2
CFG3
PD
SCL
SDA
R7 100K
R8 6.8K
JP8
D4
SMF10A
C6
0.1uF
J18
VIN
J6
MCU
OUT_LOAD
CFG1
CFG2
JP5
D13
SS34
J19
OUT
J9
J10
BAT+
Current shunt
1W
R15 0.1
AO3401A
Q5
R24 10K
D11
LED
BAT+_P
J20
OPA+
BAT_OUT2
J13
BAT_OUT
3 of 4 charge ICs use internal buck converter to generate output voltage.
This requires a suitable inductor. Isat of selected indutor has to be bigger than
peak current of the buck converter that can be calculated using this formula:
Ipeak = Iout + ((Vin−Vout)*D)/(2*L*freq))
where D is duty cycle: D = Vout/Vin
AW32257 maximum charging current is 2.5A @1.5MHz,
APW7261 is 1.5A @3MHz,
TP5100 is 2A @800kHz.
We can use smaller package for D12, because estimated current here
will be: Ip = (1−duty_cycle)*Iload.
The worst case scenario: Ip = (1−(4.2/12))*2 = 1.3A
Power dissipation will be 1.3*0,55 = 0,715W
which SOD−123 should handle without any trouble.
R30, R33 and R34 set the current llimit at which battery will be charged.
Overall value will result in this settings:
1 Ohm − 100mA, 0.2 − 500mA, 0.1 − 1A, 0.067 − 1.5A, 0.05 − 2A
VBUS
R4 10K
POWER_SW
AO3401A
Q1
F1
Polyfuse
D15
LED
R36 10K
JP2
D16
LED
R37 10K
GND
+9V
Rsns (R13) selection per datasheet:
56m, 68m, 100m
The higher the value, the lower is charging current.
JP3
D5
SS34
U5
APW7261
VBUS2
PMID
BOOT
SW
CSIN
CSOUT
SCL
SDA
STAT
OTG
CD
REGN
PGND
J11
CHRG3
BAT3+
Q2
AO3401A
D7
LED
R16 1K
C7 1uF
R11 100K
C9 4.7uF
C11 0.1uF
C14 22uF
R13 56m
L1 1uH
C16 0.1uF
C17 0.1uF
C19 1uF
J7
BAT2
JP7
U8
TP5100
VIN
CS
CHRG
STDBY
VREG
RTRICK
LX
VS
BAT
PWR_ON
TS
GND
T_PAD
D12
SS34
L3 4.7uH
R19 10K
JP6
CHRG4
J14
D9
SS34
BAT4+
Q4
AO3401A
R18 100K
C20 10uF
D10
LED
C21 0.1uF
R20 1K
R22 20K
R30 0.1
R33 0.1
R34
J15
NTC2
C23 10uF
J17
BAT4
C24 10uF
CS pin is used to select battery voltage
CS floating − 4.2V or CS high − 8.4V
CS low − shutdown
R22 sets trickle−charging current to start battery charging slowly,
when the battery voltage is lower then the threshold.
50K − 20% I, 114K − 30% I, 320K − 50% I, 0 − 100%
C1 4.7uF
C2 4.7uF
JP1
NTC1
J1
BAT1
J4
U1
AW32001E
IN
BAT
NTC
VDD
SYS
SCL
SDA
INT
GND
INT
R1 10K
R2 TBD
R3 TBD
C3 1uF
On
SW2
J5
CHRG1
D3
LED
R10 1K
C5 10uF
JP4
D6
SS34
U6
AW32257
VBUS1
PMID
SW
CSIN
CSOUT
SCL
SDA
STAT
OTG
CD
PGND
J12
CHRG2
BAT2+
Q3
AO3401A
D8
LED
R17 1K
C8 1uF
R12 100K
C10 4.7uF
C12 0.1uF
C15 22uF
R14 33m
L2 1uH
C18 0.1uF
J8
BAT2
https://github.com/Subjective−Reality−Labs/
https://subjectiverealitylabs.com/
SRL
Sheet: /
File: battery_charger_devboard_multi.kicad_sch
Title: SD−001
Size: A4
Date: 2026−03−22
Rev: 1
KiCad E.D.A. 9.0.8
Id: 1/1