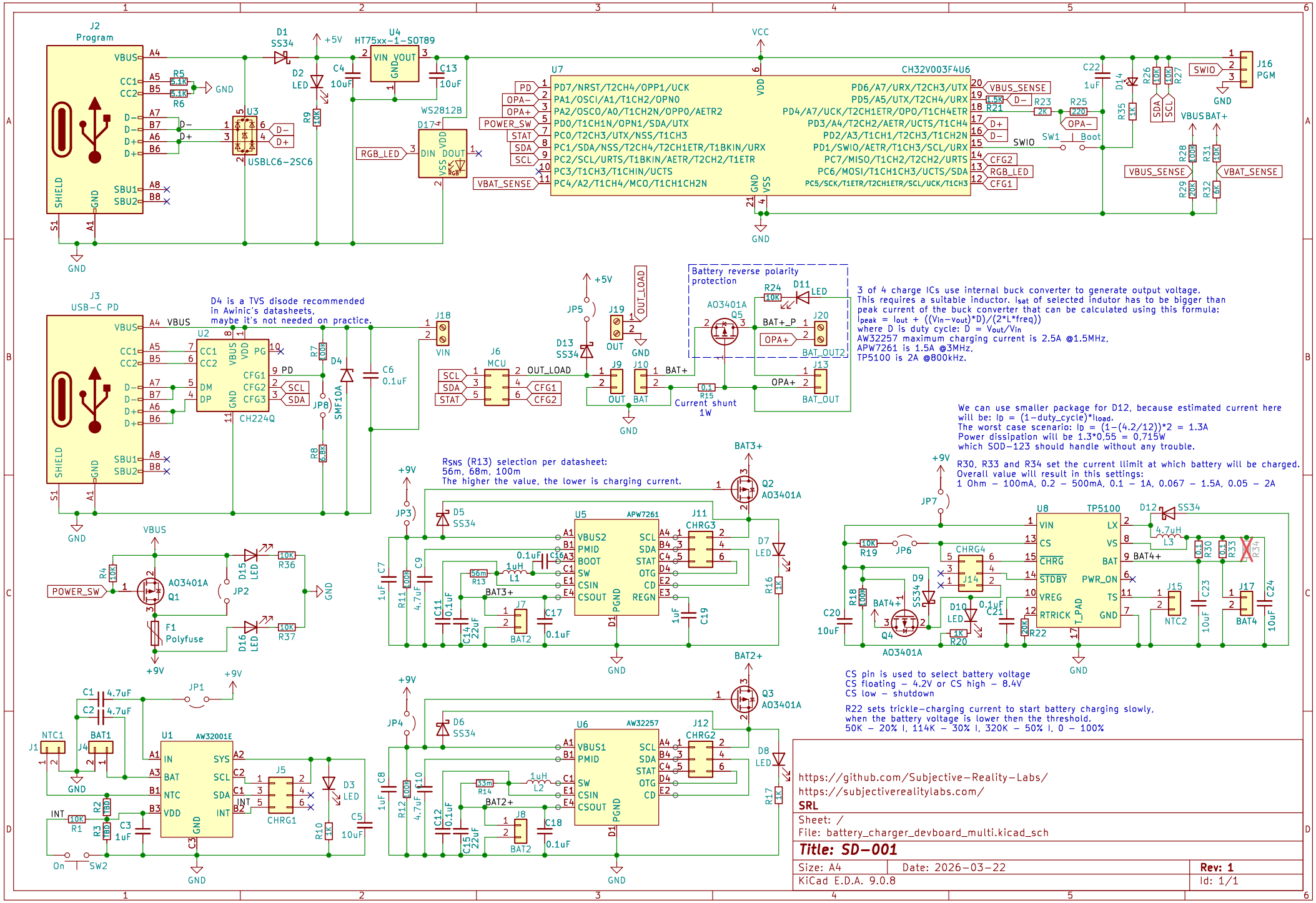
J2 Program
VBUS A4
CC1 A5 R5 5.1K
CC2 B5 5.1K R6
GND
D− A7 B7 D−
D+ A6 B6 D+
SBU1 A8
SBU2 B8
SHIELD
S1 A1 GND
D1 SS34
D2 LED
R9 10K
+5V
U3 USBLC6-2SC6
U4 HT75xx-1-SOT89
VIN VOUT GND
C4 10uF
C13 10uF
WS2812B
D17
RGB_LED
DIN DOUT VDD VSS
U7 CH32V003F4U6
VCC
VDD
PD7/NRST/T2CH4/OPP1/UCK
PA1/OSCI/A1/T1CH2/OPN0
PA2/OSCO/A0/T1CH2N/OPP0/AETR2
PD0/T1CH1N/OPN1/SDA/UTX
PC0/T2CH3/UTX/NSS/T1CH3
PC1/SDA/NSS/T2CH4/T2CH1ETR/T1BKIN/URX
PC2/SCL/URTS/T1BKIN/AETR/T2CH2/T1ETR
PC3/T1CH3/T1CHIN/UCTS
PC4/A2/T1CH4/MCO/T1CH1CH2N
PD6/A7/URX/T2CH3/UTX
PD5/A5/UTX/T2CH4/URX
PD4/A7/UCK/T2CH1ETR/OPO/T1CH4ETR
PD3/A4/T2CH2/AETR/UCTS/T1CH4
PD2/A3/T1CH1/T2CH3/T1CH2N
PD1/SWIO/AETR/T1CH3/SCL/URX
PC7/MISO/T1CH2/T2CH2/URTS
PC6/MOSI/T1CH1CH3/UCTS/SDA
PC5/SCK/T1ETR/T2CH1ETR/SCL/UCK/T1CH3
PD OPA− OPA+ POWER_SW STAT SDA SCL VBAT_SENSE
VBUS_SENSE D− D+ SWIO CFG2 RGB_LED CFG1
GND VSS
C22 1uF
R23 2K
R25 220
OPA−
SW1 Boot
D14
R35 1K
R26 10K
R27 10K
SDA SCL
J16 PGM
SWIO GND
VBUS BAT+
R28 100K
R31 10K
R29 20K
R32 6K
VBUS_SENSE
VBAT_SENSE
J3 USB-C PD
D4 is a TVS disode recommended in Awinic's datasheets, maybe it's not needed on practice.
U2 CH224Q
CC1 CC2 VBUS VDD PG
DM DP GND
CFG1 CFG2 CFG3
PD SCL SDA
R7 100K
R8 6.8K
JP8
D4 SMF10A
C6 0.1uF
J18 VIN
J6 MCU
SCL SDA STAT
OUT_LOAD CFG1 CFG2
+5V
JP5
D13 SS34
J19 OUT
OUT_LOAD
J9 OUT
J10 BAT
BAT+
R15 0.1
Current shunt 1W
Battery reverse polarity protection
AO3401A Q5
R24 10K
D11 LED
BAT+_P
J20 OPA+
BAT_OUT2
J13 BAT_OUT
OPA+
3 of 4 charge ICs use internal buck converter to generate output voltage.
This requires a suitable inductor. Isat of selected indutor has to be bigger than peak current of the buck converter that can be calculated using this formula:
Ipeak = Iout + ((Vin−Vout)*D)/(2*L*freq))
where D is duty cycle: D = Vout/Vin
AW32257 maximum charging current is 2.5A @1.5MHz,
APW7261 is 1.5A @3MHz,
TP5100 is 2A @800kHz.
We can use smaller package for D12, because estimated current here will be: Id = (1−duty_cycle)*Iload.
The worst case scenario: Id = (1−(4.2/12))*2 = 1.3A
Power dissipation will be 1.3*0,55 = 0,715W
which SOD−123 should handle without any trouble.
R30, R33 and R34 set the current llimit at which battery will be charged.
Overall value will result in this settings:
1 Ohm − 100mA, 0.2 − 500mA, 0.1 − 1A, 0.067 − 1.5A, 0.05 − 2A
VBUS
R4 10K
POWER_SW
AO3401A Q1
F1 Polyfuse
D15 LED
R36 10K
JP2
D16 LED
R37 10K
+9V
Rsns (R13) selection per datasheet:
56m, 68m, 100m
The higher the value, the lower is charging current.
JP3
D5 SS34
U5 APW7261
VBUS2 PMID BOOT SW CSIN CSOUT
SCL SDA STAT OTG CD REGN
PGND
J11 CHRG3
BAT3+
Q2 AO3401A
D7 LED
R16 1K
C7 1uF
R11 100K
C9 4.7uF
C11 0.1uF
C14 22uF
56m R13
1uH L1
0.1uF C16
BAT3+
J7 BAT2
C17 0.1uF
1uF C19
JP7
U8 TP5100
VIN CS CHRG STDBY VREG RTRICK
LX VS BAT PWR_ON TS GND
T_PAD
D12 SS34
4.7uH L3
BAT4+
R19 10K
JP6
CHRG4 J14
D9 SS34
D10 LED
C21 0.1uF
R20 1K
R22 20K
C20 10uF
R18 100K
BAT4+
Q4 AO3401A
R30 0.1
R33 0.1
R34
J15 NTC2
C23 10uF
J17 BAT4
C24 10uF
CS pin is used to select battery voltage
CS floating − 4.2V or CS high − 8.4V
CS low − shutdown
R22 sets trickle−charging current to start battery charging slowly, when the battery voltage is lower then the threshold.
50K − 20% I, 114K − 30% I, 320K − 50% I, 0 − 100%
C1 4.7uF
C2 4.7uF
JP1
NTC1 J1
BAT1 J4
U1 AW32001E
IN BAT NTC VDD
SYS SCL SDA INT
GND
INT
R2 TBD
R1 10K
R3 TBD
C3 1uF
On SW2
J5 CHRG1
D3 LED
R10 1K
C5 10uF
JP4
D6 SS34
U6 AW32257
VBUS1 PMID SW CSIN CSOUT
SCL SDA STAT OTG CD
PGND
J12 CHRG2
BAT2+
Q3 AO3401A
D8 LED
R17 1K
C8 1uF
R12 100K
C10 4.7uF
C12 0.1uF
C15 22uF
33m R14
1uH L2
BAT2+
J8 BAT2
C18 0.1uF
https://github.com/Subjective−Reality−Labs/
https://subjectiverealitylabs.com/
SRL
Sheet: /
File: battery_charger_devboard_multi.kicad_sch
Title: SD−001
Size: A4
Date: 2026−03−22
Rev: 1
KiCad E.D.A. 9.0.8
Id: 1/1