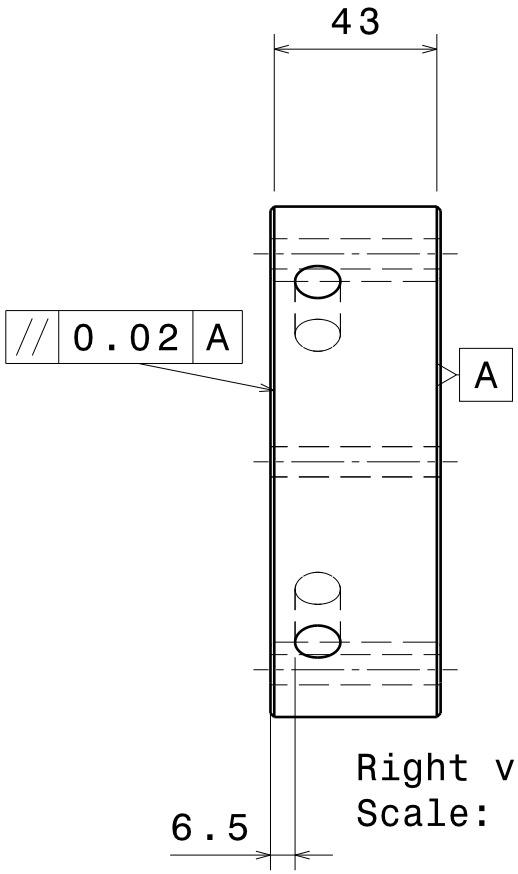


Right view
Scale: 1:2

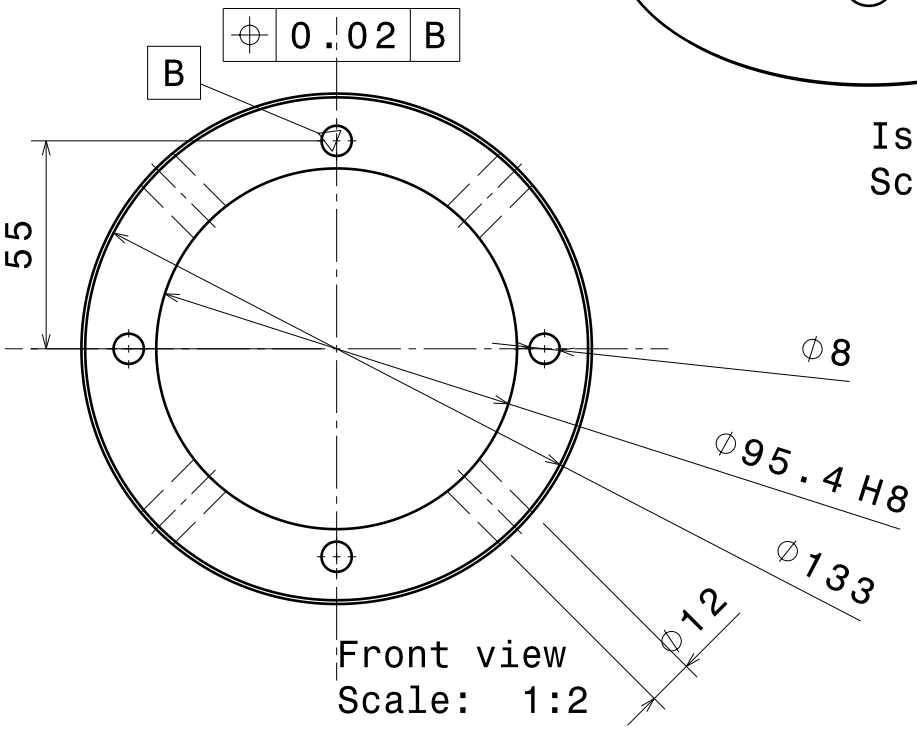


Front view
Scale: 1:2

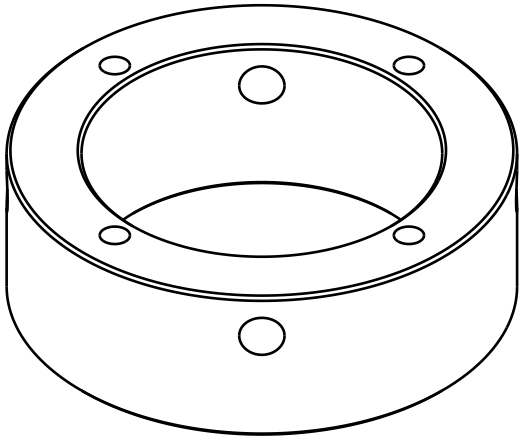

Isometric view
Scale: 1:2

| | | |
|---|---|---|
| Swash Plate Mechanism - Part Number 2 | | |
| SIZE<br>A4 | Part Name<br>Upper Swash Plate | Subrahmanya Bhide |
| SCALE 1:2 | All dimensions are in mm | |