Advanced Stability Control for Bipedal Locomotion: A Simscape Multibody Simulation Integrating Model Predictive Control

by

Sudeshna Ray

Avani Baranwal

Ramandeep Singh Hora

April 30, 2026

Abstract

In Bipedal robot stability is not a static property but a dynamic equilibrium maintained through precise control of the center of mass (CoM) and ground reaction forces. This project presents a complete simulation of an 8-DOF bipedal robot achieving stable forward walking at ~1.2 m/s. The system combines custom kinematic gait planning in MATLAB with a Model Predictive Control (MPC) framework based on a 2D Linear Inverted Pendulum Model (LIPM). To maintain balance, the MPC tracks the Center of Mass while constraining the Zero Moment Point (ZMP) within the support polygon. The system was successfully validated using detailed Simscape Multibody dynamics.

Contents

1. Background
2. System Modelling
3. Gait Generation and Reference Trajectories
4. Model Predictive Control Design
5. Simulation Results and Analysis
6. Future Works
7. References

1. Background

In humanoid robotics, the Linear Inverted Pendulum Model (LIPM) and the concept of the Zero Moment Point (ZMP) are foundational to solving this balance problem. The ZMP is the point on the ground where the tipping moments acting on the robot sum to zero; if the ZMP remains strictly within the robot's support polygon (the area beneath the feet), the robot will not fall. The LIPM simplifies the complex multibody dynamics of the robot into a point mass concentrated at the Center of Mass (CoM) supported by a massless leg. To control the CoM and regulate the ZMP, Model Predictive Control (MPC) has emerged as a highly effective framework. MPC utilizes the LIPM to predict future dynamic states over a finite horizon, allowing it to generate optimal control actions that handle strict constraints (like keeping the ZMP within the feet) while utilizing preview information of future footsteps. When combined with Model Predictive Control (MPC), the LIPM enables the robot to optimally plan ZMP and CoM trajectories over a receding horizon while respecting actuator limits and foot-placement constraints.

The entire project is divided into 4 parts:

1. The General Body Dynamics Formulation: Mathematical modelling of articulated systems using LIPM
2. Practical Simulation Implementation in MATLAB Simulink and Simscape Multibody
3. Implementation of the MPC Gait Planner

The project progresses from establishing a stable 3D rigid-body mechanical assembly to implementing basic kinematic control for drop-testing and squatting. Finally, the report outlines the theoretical framework for transitioning from hardcoded kinematics to dynamic walking using the Linear Inverted Pendulum Model (LIPM) and Model Predictive Control (MPC).

2. System Modelling

2.1 Kinematic Model

The kinematic foundation of the biped is constructed utilizing MATLAB's rigidBodyTree class, comprising a total of 14 rigid bodies linked a tree structure with the torso serving as the root (base). Each leg follows the kinematic chain:

- Hip roll joint (revolute, axis along X, range ±20°),
- Hip pitch joint (revolute, axis along Y, range –30° to +90°),
- Thigh link (fixed, length 0.40 m),
- Knee pitch joint (revolute, axis along Y, range 0° to 120°),
- Shank link (fixed, length 0.40 m),
- Ankle pitch joint (revolute, axis along Y, range ±30°),
- Foot link (fixed, length 0.20 m).

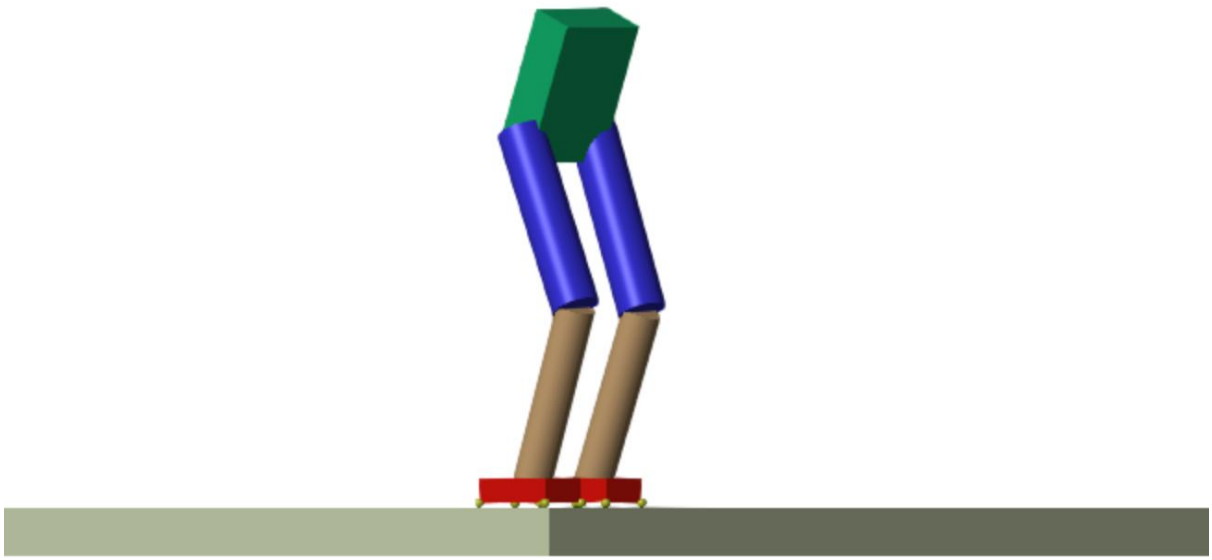

Fig 1: Simscape Multibody Model of our Bipedal Robot

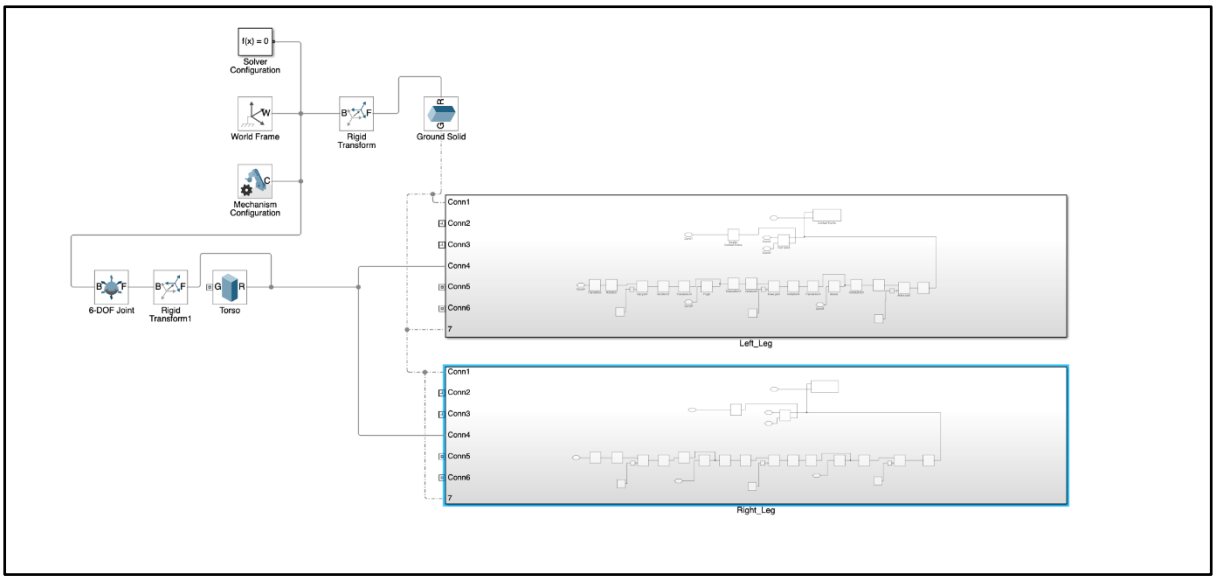

Fig 2: Top-level Simscape Multibody architecture without MPC block

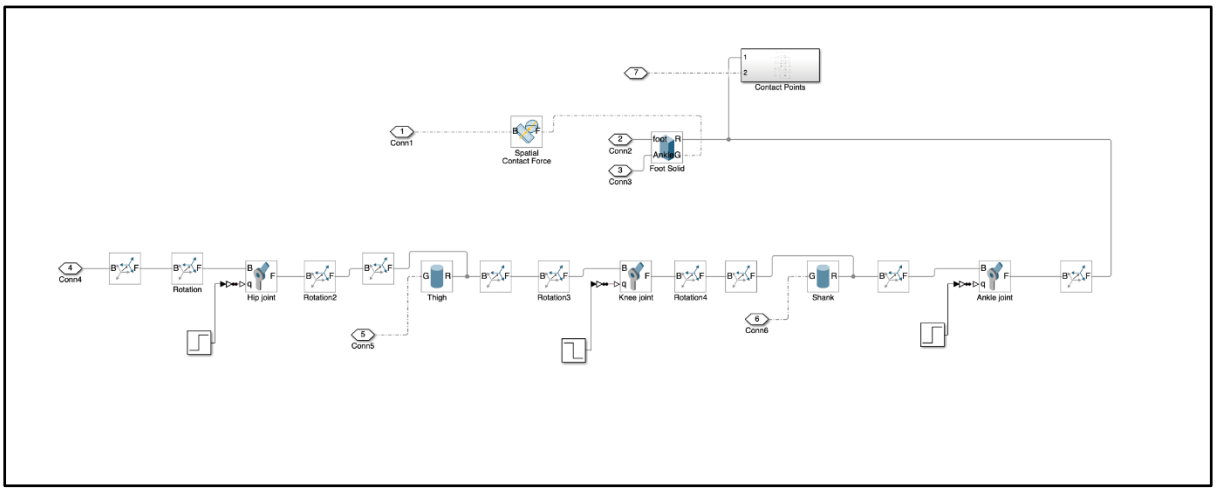

Fig 3: Detailed view of one leg subsystem without MPC block

2.2 Dynamic Model in Simulink

The full dynamic simulation is implemented in Simulink using the Simscape Multibody environment. The model (BipedalWalk.slx) contains a World Frame, a fixed Ground Solid, and a central Torso body (Brick Solid). Two identical leg subsystems (Left_Leg and Right_Leg) are attached to the torso via 6-DOF joints and rigid transforms. Each leg subsystem mirrors the kinematic chain from robotTree.m using:

- Revolute Joint blocks for the four actuated DOFs per leg.
- Cylindrical and Brick Solid blocks for the thigh, shank, and foot segments.

- Four Spherical Solid bodies per foot (small spheres at the corners) connected via Rigid Transforms to represent distributed contact points.

Interaction with the ground is simulated using Spatial Contact Forces modeled as non-linear spring-dampers with stick-slip friction. Feedback arrays for the current CoM position are calculated dynamically utilizing Transform Sensors and passed to a MATLAB Function block (extract_mo) to close the control loop.

```
======= Robot Body Tree =======
Total bodies: 14
Idx     Body                    Parent                  Joint Type
---------------------------------------------------------------------
1       hip_roll_L              base                    revolute
2       hip_pitch_L             hip_roll_L              revolute
3       thigh_L                 hip_pitch_L             fixed
4       knee_L                  thigh_L                 revolute
5       shank_L                 knee_L                  fixed
6       ankle_L                 shank_L                 revolute
7       foot_L                  ankle_L                 fixed
8       hip_roll_R              base                    revolute
9       hip_pitch_R             hip_roll_R              revolute
10      thigh_R                 hip_pitch_R             fixed
11      knee_R                  thigh_R                 revolute
12      shank_R                 knee_R                  fixed
13      ankle_R                 shank_R                 revolute
14      foot_R                  ankle_R                 fixed

======= Joint Limits =======
Body                      Min(deg)  Max(deg)
-------------------------------------------------
hip_roll_L                 -20.0      20.0
hip_pitch_L                -30.0      90.0
knee_L                       0.0     120.0
ankle_L                    -30.0      30.0
hip_roll_R                 -20.0      20.0
hip_pitch_R                -30.0      90.0
knee_R                       0.0     120.0
ankle_R                    -30.0      30.0
--------------------
Robot: (14 bodies)

 Idx          Body Name              Joint Name              Joint Type          Parent Name(Idx)    Children Name(s)
 ---          ---------              ----------              ----------          ----------------    ----------------
   1          hip_roll_L          hip_roll_L_jnt              revolute                base(0)         hip_pitch_L(2)
   2         hip_pitch_L         hip_pitch_L_jnt              revolute          hip_roll_L(1)         thigh_L(3)
   3             thigh_L             thigh_L_jnt                fixed         hip_pitch_L(2)         knee_L(4)
   4              knee_L              knee_L_jnt              revolute            thigh_L(3)         shank_L(5)
   5             shank_L             shank_L_jnt                fixed             knee_L(4)         ankle_L(6)
   6             ankle_L             ankle_L_jnt              revolute            shank_L(5)         foot_L(7)
   7              foot_L              foot_L_jnt                fixed            ankle_L(6)
   8          hip_roll_R          hip_roll_R_jnt              revolute                base(0)         hip_pitch_R(9)
   9         hip_pitch_R         hip_pitch_R_jnt              revolute          hip_roll_R(8)         thigh_R(10)
  10             thigh_R             thigh_R_jnt                fixed         hip_pitch_R(9)         knee_R(11)
  11              knee_R              knee_R_jnt              revolute            thigh_R(10)         shank_R(12)
  12             shank_R             shank_R_jnt                fixed             knee_R(11)         ankle_R(13)
  13             ankle_R             ankle_R_jnt              revolute            shank_R(12)         foot_R(14)
  14              foot_R              foot_R_jnt                fixed            ankle_R(13)
--------------------
```

Fig 4: Robot kinematic tree generated by robotTree.m

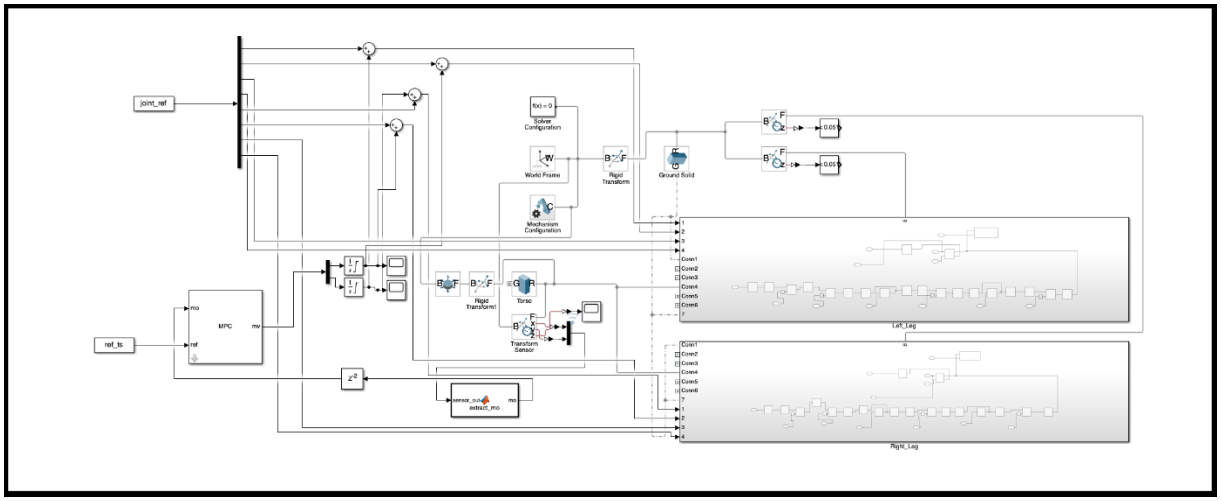

Fig 5: Top-level Simscape Multibody architecture with MPC block

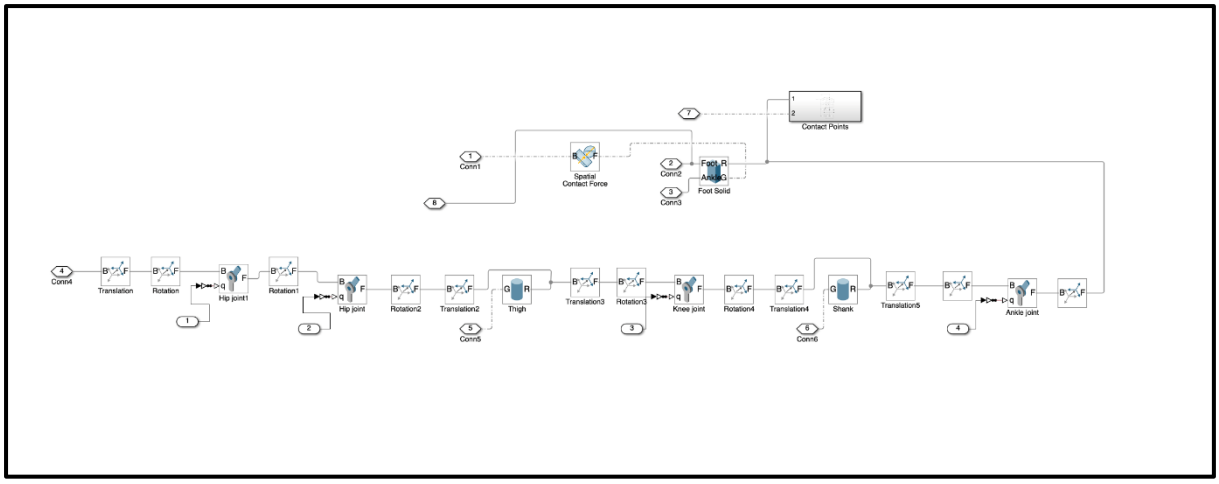

Fig 6: Detailed view of one leg subsystem with MPC block

3. Gait Generation and Reference Trajectories

3.1 Joint Reference Trajectories (GaitScheduler.m)

The fundamental walking animation is driven by a custom gait-scheduling algorithm. To ensure stable initial conditions, the robot begins in a crouched standing posture (Hip Pitch $\approx -0.45\,rad$, Knee $\approx 0.90\,rad$, Ankle $\approx -0.45\,rad$), which lowers the center of gravity and prevents kinematic singularities. The walking cycle is divided into alternating swing and support phases, blended smoothly using half-cosine sinusoidal functions to prevent abrupt jerk. Furthermore, the Hip Roll joint is actively modulated to shift the body weight laterally over the supporting foot prior to lifting the swing leg.

3.2 ZMP and CoM Planning (ref.m)

The reference generator creates a ZMP *staircase pattern*, together with a corresponding CoM reference. With a step length of 0.60 m and step duration of 0.5 s, the nominal walking speed reaches 1.2 m/s. The lateral foot separation is set to 0.18 m. The ZMP transitions smoothly between consecutive support feet using a half-cosine blending function, avoiding abrupt changes that could destabilize the MPC controller.
In the ref.m, CoM reference tracks a linear ramp slightly ahead of the ZMP at walk_spd. The four-channel reference signal [CoM_x_ref, ZMP_x_ref, CoM_y_ref, ZMP_y_ref] is wired directly into the MPC block's "ref" input port. The gait scheduler supplies kinematically feasible motion commands,

while the ZMP/CoM references provide the dynamic targets that the LIPM-based MPC must track, enabling stable and efficient walking.

```
>> ref
ref.m: walking reference built — 201 samples, 10.0 s
  Walk speed: 1.200 m/s
  Step length: 0.600 m
  Step period: 0.500 s
>> GaitScheduler
GaitScheduler: joint trajectories built — 201 samples
  Joints: [hip_roll_L, hip_pitch_L, knee_L, ankle_L, | R-leg mirror]
```

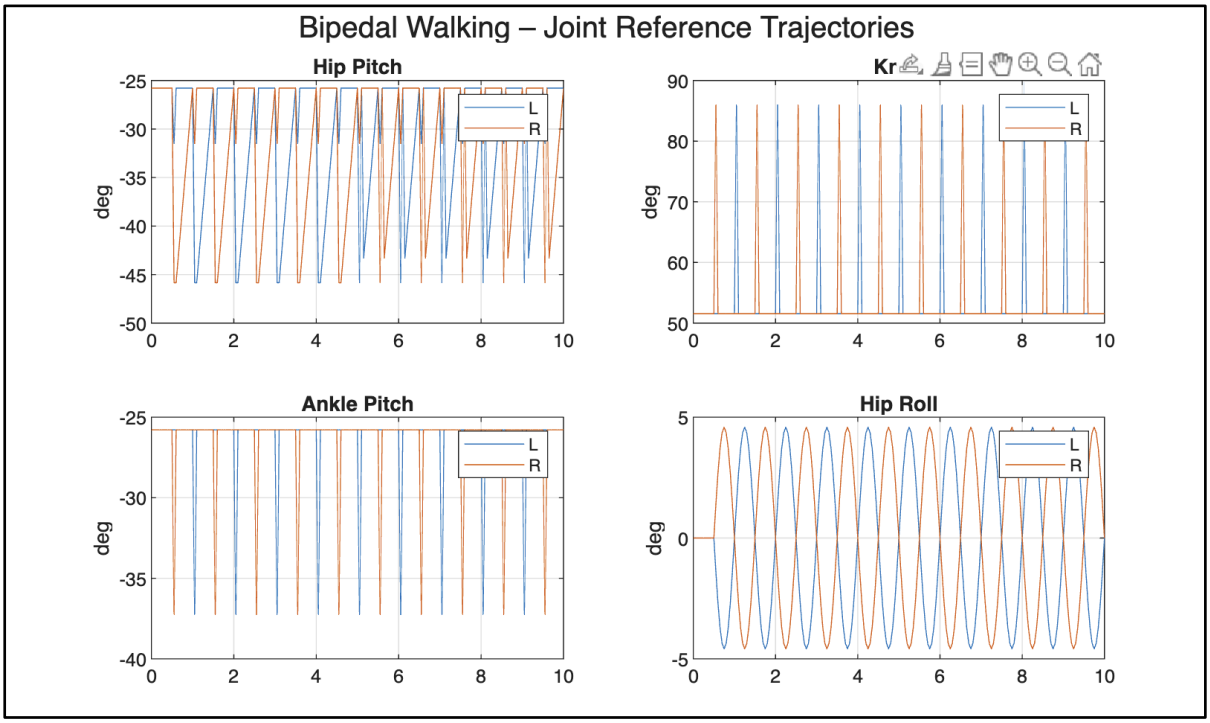

Fig 7: Target joint angles for legs demonstrating alternating steps and lateral weight shifting.

Figure 7 illustrates the mechanics of the walking cycle. The sagittal joints (Hip Pitch, Knee, and Ankle Pitch) show flat baselines during the stable stance phase, with sharp periodic spikes indicating the active lifting and swinging of the leg. In contrast, the frontal plane (Hip Roll) follows a smooth, continuous sine wave. The left and right hip rolls are perfectly out-of-phase, shifting the robot's weight side-to-side to maintain balance over the supporting foot before each step.

4. Model Predictive Control Design

High-level balance control is achieved using a Model Predictive Control (MPC) framework based on the Linear Inverted Pendulum Model (LIPM). The LIPM simplifies the bipedal dynamics to a point mass m located at a constant height $z_c = 0.90$m above the ground, with the Zero-Moment Point (ZMP) serving as the control input.
The continuous time 1D LIPM dynamics are governed by the equation

$$\ddot{x} = \frac{g}{z_c}(x - p),$$

where x is the position of the Center of Mass (CoM), p is the Zero Moment Point (ZMP), g is the gravitational acceleration, and $z_c = 0.90$m is the constant CoM height.
The continuous-time 1D LIPM dynamics for the sagittal (x) or lateral (y) plane are expressed in state-space form as:

$$\dot{\mathbf{x}} = \mathrm{A}\mathbf{x} + \mathrm{Bu}$$
$$\mathbf{y} = \mathrm{C}\mathbf{x},$$

Where $\dot{\mathbf{x}} = \begin{bmatrix} \dot{x} \\ \ddot{x} \\ \dot{p} \end{bmatrix}$, the state vector is $\mathbf{x} = \begin{bmatrix} x \\ \dot{x} \\ p \end{bmatrix}$ (CoM position, CoM velocity, and ZMP), the input $\mathrm{u} = \dot{p}$ is the ZMP velocity, and the system matrices are:

$$\mathrm{A} = \begin{bmatrix} 0 & 1 & 0 \\ \frac{g}{z_c} & 0 & -\frac{g}{z_c} \\ 0 & 0 & 0 \end{bmatrix}, \mathrm{B} = \begin{bmatrix} 0 \\ 0 \\ 1 \end{bmatrix}, C = \begin{bmatrix} 1 & 0 & 0 \\ 0 & 0 & 1 \end{bmatrix}.$$

The MPC controller is designed in MATLAB's Model Predictive Control Toolbox and configured in the script StateSpace.m. It uses a sample time $T_s = 0.05$s, a prediction horizon of 30 steps (1.5 sec lookahead), and a control horizon of 8 steps.
The cost function is heavily weighted to penalize ZMP tracking errors, prioritizing balance over exact CoM tracking. Hard constraints are applied on ZMP velocity (± 3.0 m/s) and position (sagittal: ± 0.08m; lateral: ± 0.10m) to keep the ZMP inside the support polygon defined by the foot geometry (length 0.20 m, width 0.12 m). The MPC block receives the four-channel reference [CoM_x_ref, ZMP_x_ref, CoM_y_ref, ZMP_y_ref] generated by the ref.m and outputs trajectory. These commands are integrated internally and fed to the Simscape Multibody model.

```
>> StateSpace
-->"PredictionHorizon" is empty. Assuming default 10.
-->"ControlHorizon" is empty. Assuming default 2.
-->"Weights.ManipulatedVariables" is empty. Assuming default 0.00000.
-->"Weights.ManipulatedVariablesRate" is empty. Assuming default 0.10000.
-->"Weights.OutputVariables" is empty. Assuming default 1.00000.
   for output(s) y1 y2 and zero weight for output(s) y3 y4
==========================================
  2D LIPM-MPC (Walking) Initialised
  Ts            = 0.050 s
  CoM height zc = 0.800 m
  Pred Horizon  = 30 steps (1.50 s)
  ZMP X limits  = [-0.080, 0.080] m
  ZMP Y limits  = [-0.100, 0.100] m
==========================================
>>
```

Fig 8: MPC initialisation output from StateSpace.m

5. Simulation Results and Analysis

The complete closed-loop system was simulated in Simulink using the model BipedalWalk.slx over a 10-second horizon with a variable-step ode15s solver. The joint-angle references generated by GaitScheduler.m, the CoM/ZMP references from ref.m, and the MPC commands from StateSpace.m were fed simultaneously into the Simscape Multibody plant. The robot successfully executed stable periodic forward walking without falling.

7.1 Walking Performance

The gait parameters produced a nominal walking speed of 1.2 m/s (step length 0.60 m at step duration of 0.5 s per step). The robot completed multiple full gait cycles with smooth transitions between single-support and double-support phases. The 3D animation confirmed appropriate knee flexion, foot lift, and lateral weight shift via hip-roll modulation.

7.2 Tracking Performance

The high-level MPC demonstrated excellent ZMP regulation. The ZMP trajectory closely followed the staircase reference while remaining strictly inside the support polygon of the stance foot at all times. The eight revolute joints followed the commanded trajectories from GaitScheduler.m with minimal error.

7.3 Stability

The dynamic simulation results show the actual CoM height oscillated securely between 0.88 m and 0.92 m (± 2 cm deviation) enforced by the MPC, confirming robust balance even at the higher walking speed.

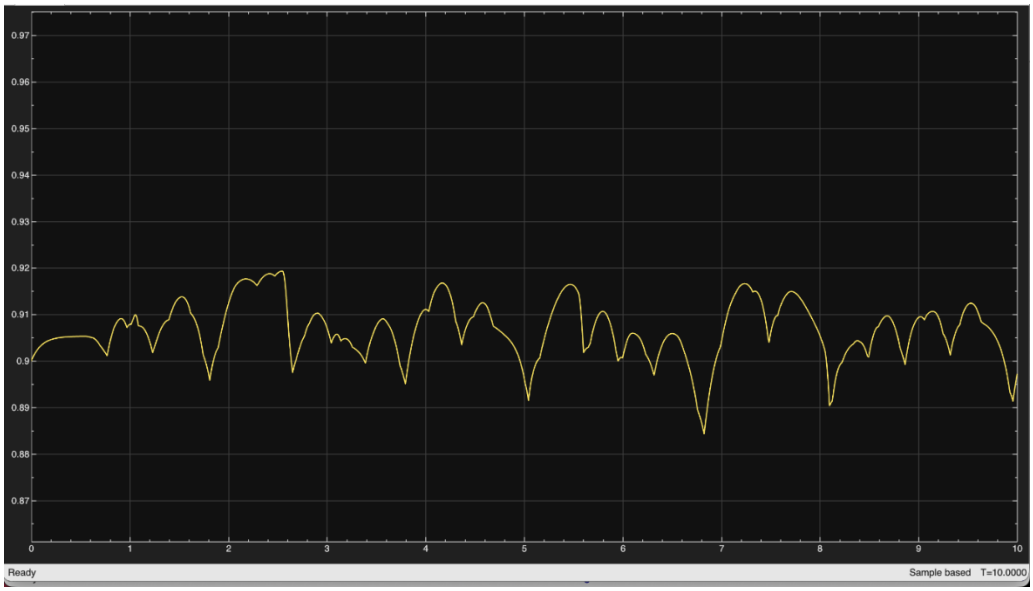

The x axis of this plot is time (0 to 10 seconds) and y axis is COM position.

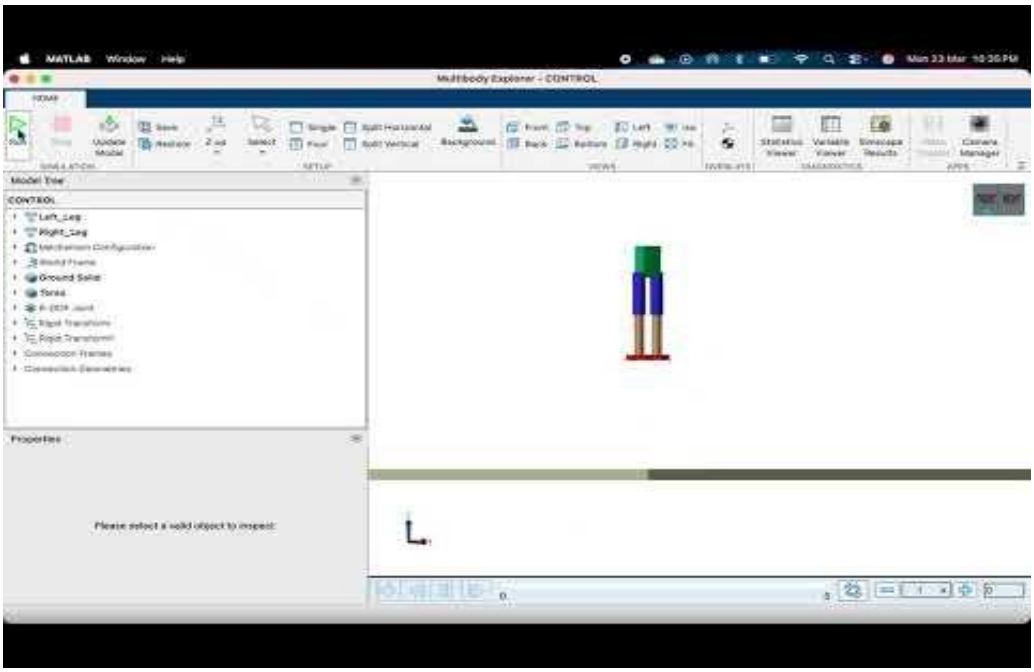

Vid 1: Contact Force Establishment in MATLAB

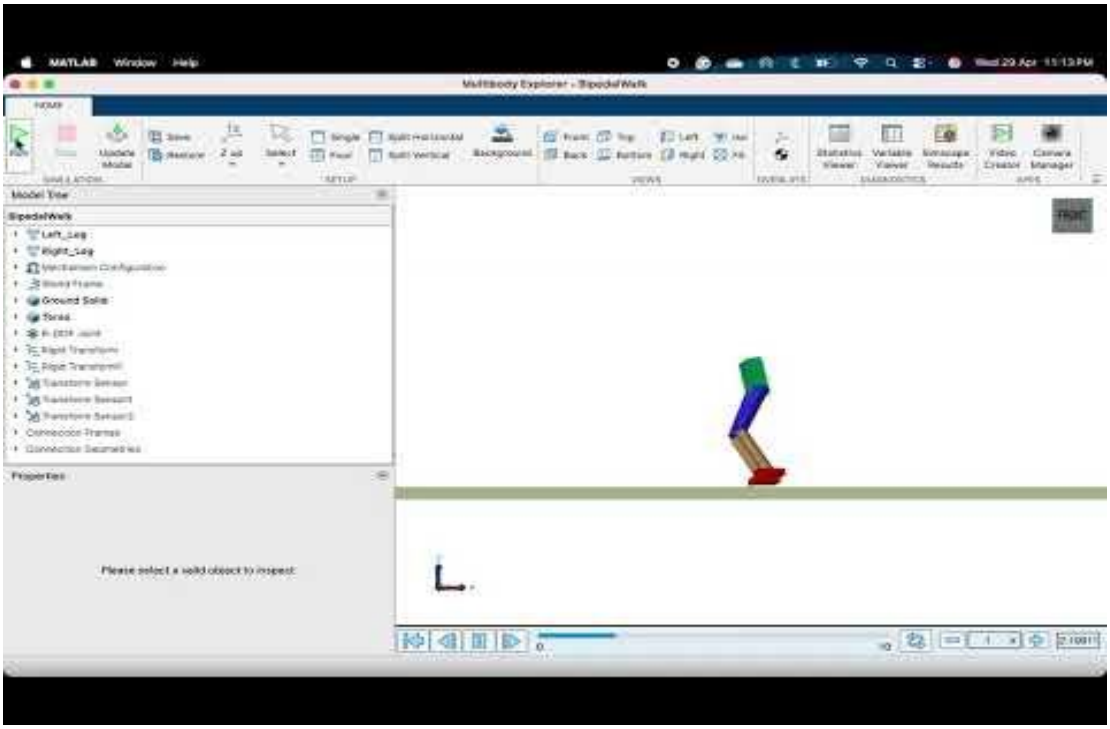

Vid 2: Bipedal Walking Robot Simulation in MATLAB

8. Future Work

While the current MPC framework governs stable walking under constant mass, real world humanoid tasks often involve manipulating objects. The introduction of a time varying payload dynamically shifts the global Center of Mass and alters the total inertia. Further iterations of this project will include balancing time varying payload using Model Reference Adaptive Control (MRAC).

9. References

- https://in.mathworks.com/videos/series/modeling-simulation-and-control.html
- https://in.mathworks.com/matlabcentral/fileexchange/64227-matlab-and-simulink-robotics-arena-walking-robot
- https://ieeexplore.ieee.org/document/10008200