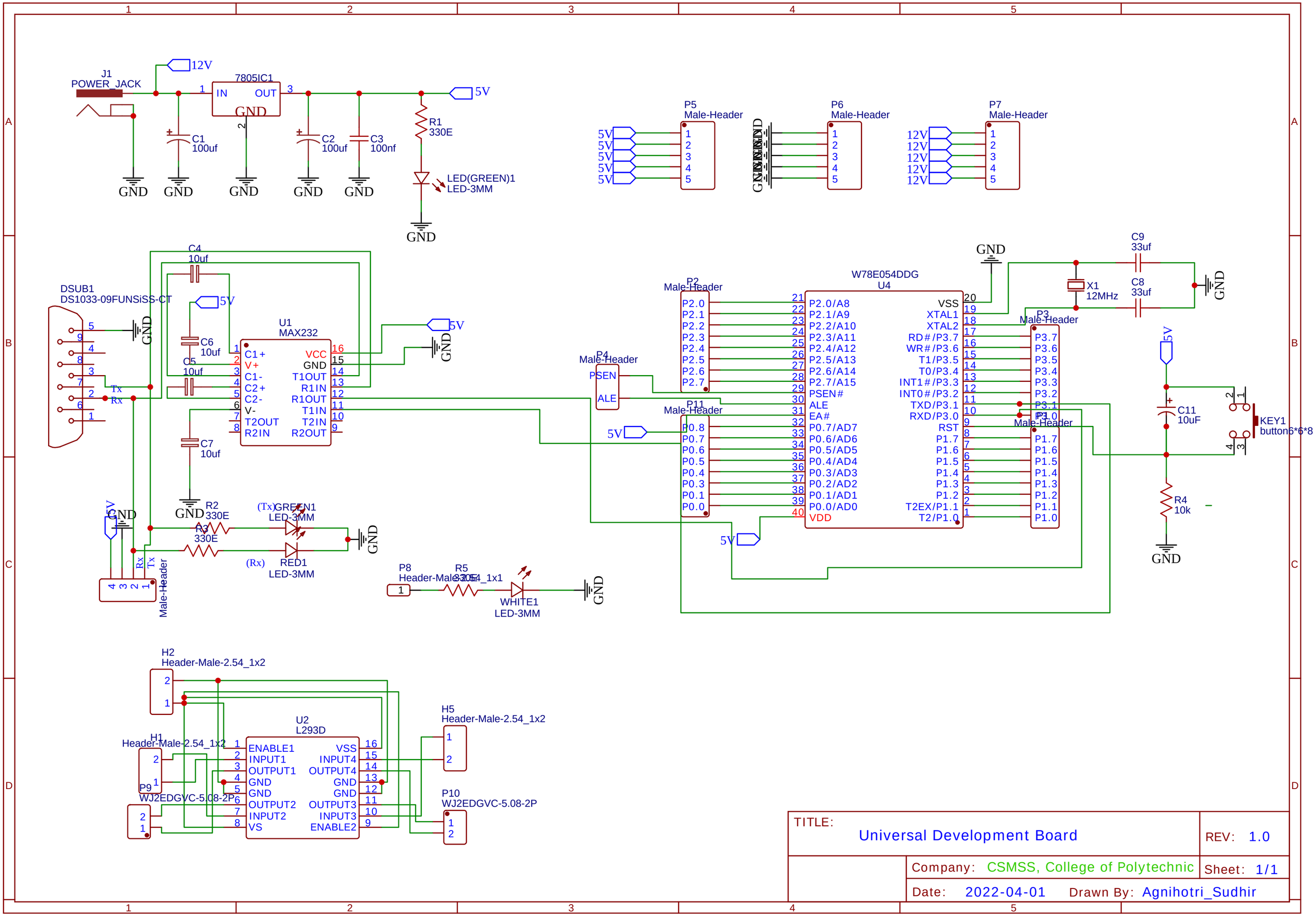

TITLE: Universal Development Board	REV: 1.0
Company: CSMSS, College of Polytechnic	Sheet: 1/1
Date: 2022-04-01 Drawn By: Agnihotri_Sudhir	