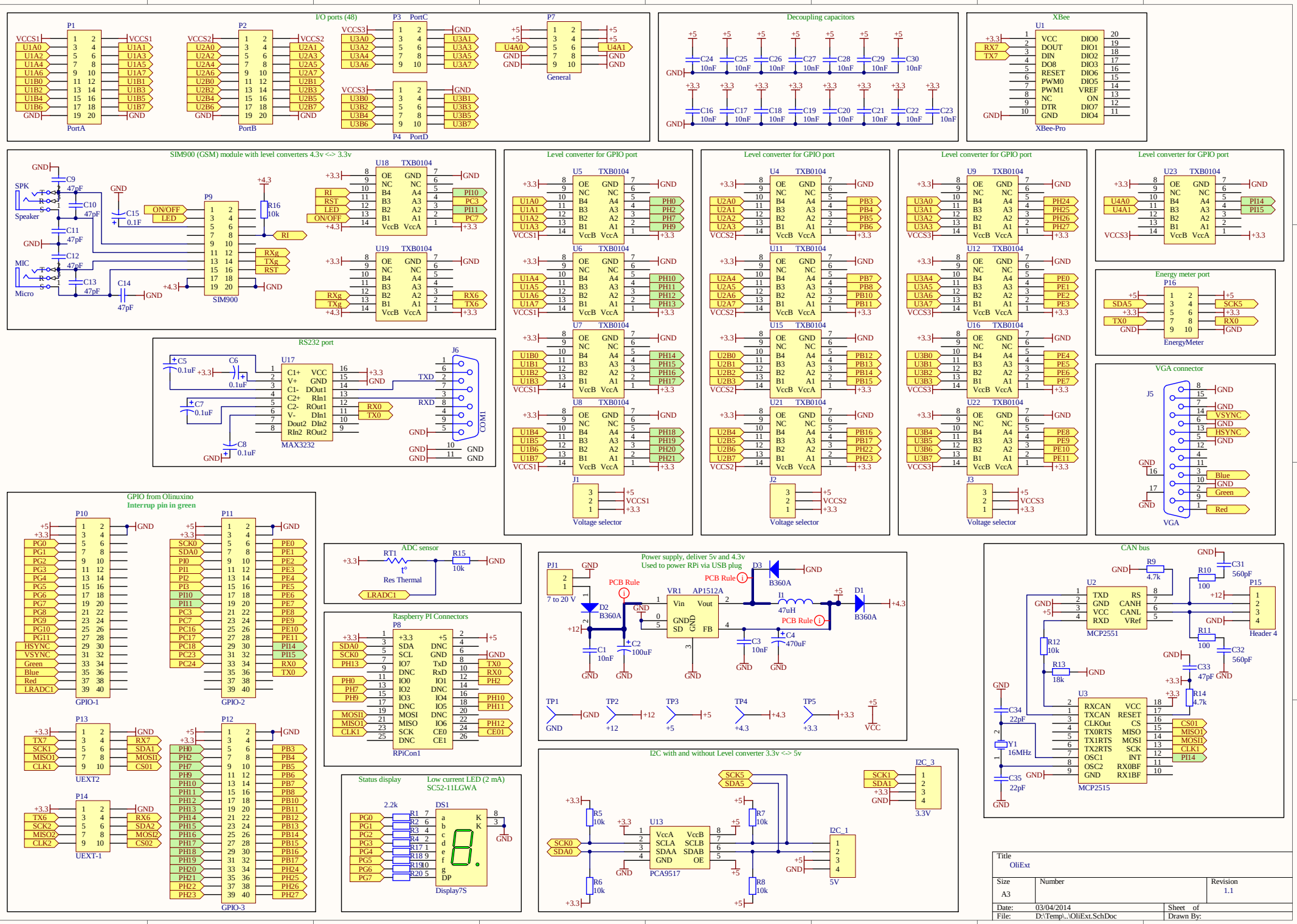
I/O ports (48)
P1 PortA
P2 PortB
P3 PortC
P4 PortD
P7 General
Decoupling capacitors
XBee
U1 XBee-Pro
SIM900 (GSM) module with level converters 4.3v <-> 3.3v
U18 TXB0104
U19 TXB0104
P9 SIM900
Speaker
Micro
Level converter for GPIO port
U5 TXB0104
U6 TXB0104
U7 TXB0104
U8 TXB0104
U4 TXB0104
U11 TXB0104
U15 TXB0104
U21 TXB0104
U9 TXB0104
U12 TXB0104
U16 TXB0104
U22 TXB0104
U23 TXB0104
Voltage selector
Energy meter port
P16 EnergyMeter
RS232 port
U17 MAX3232
J6 COM1
VGA connector
J5 VGA
GPIO from Olinuxino
Interrup pin in green
P10 GPIO-1
P11 GPIO-2
P12 GPIO-3
P13 UEXT2
P14 UEXT-1
ADC sensor
RT1 Res Thermal
LRADC1
Raspberry PI Connectors
P8 RPiCon1
Status display
Low current LED (2 mA)
SC52-11LGWA
DS1 Display7S
Power supply, deliver 5v and 4.3v
Used to power RPi via USB plug
PJ1 7 to 20 V
VR1 AP1512A
PCB Rule
I2C with and without Level converter 3.3v <-> 5v
U13 PCA9517
I2C_1 5V
I2C_3 3.3V
CAN bus
U2 MCP2551
U3 MCP2515
P15 Header 4
Title
OliExt
Size A3
Number
Revision 1.1
Date: 03/04/2014
File: D:\Temp\..\OliExt.SchDoc
Sheet of
Drawn By: