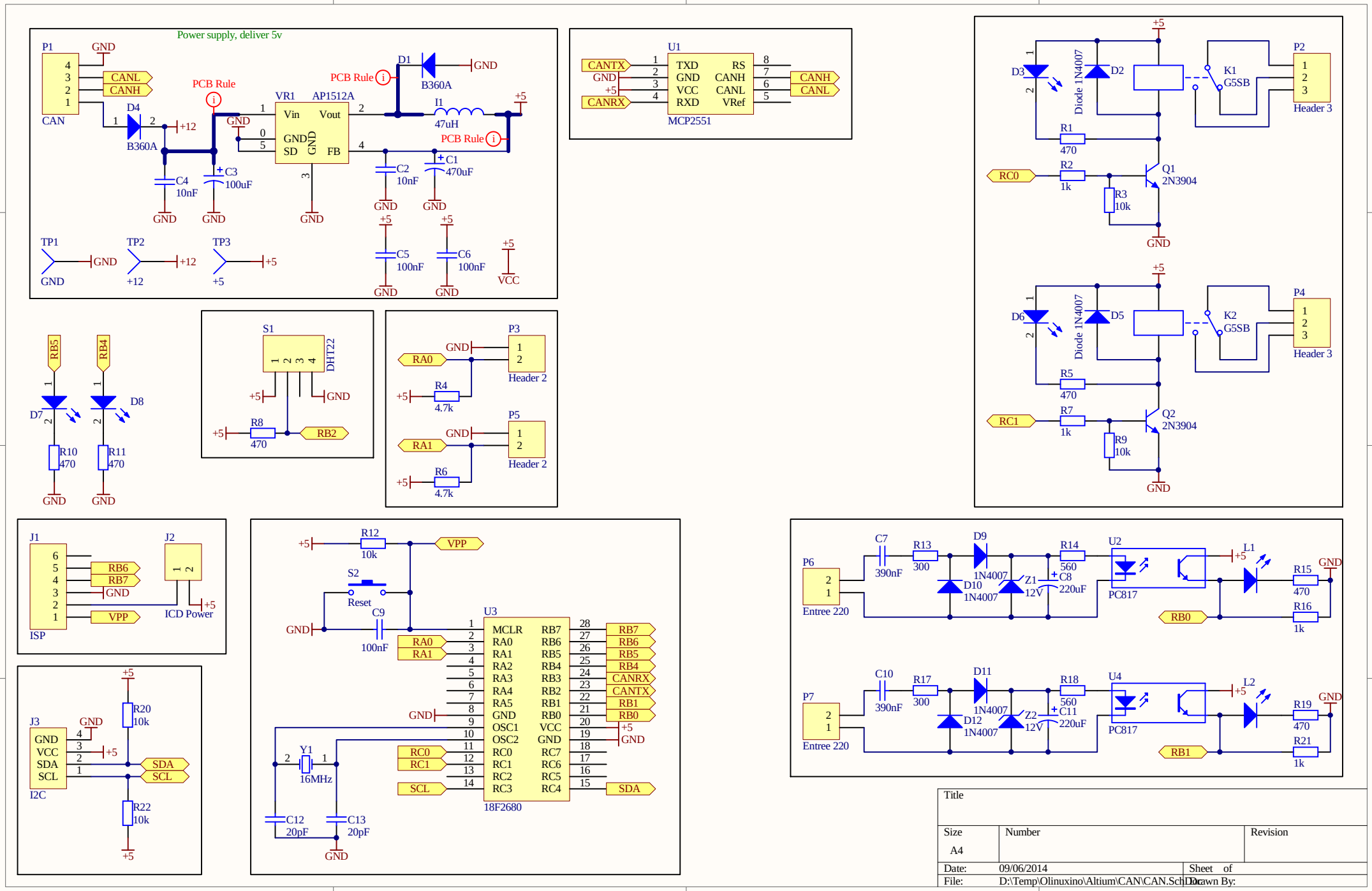
Power supply, deliver 5v
P1
CAN
CANL
CANH
D4
B360A
PCB Rule
VR1
AP1512A
Vin
Vout
GND
SD
FB
D1
B360A
I1
47uH
C3
100uF
C4
10nF
C2
10nF
C1
470uF
C5
100nF
C6
100nF
TP1
TP2
TP3
VCC
U1
TXD
RXD
RS
CANH
CANL
VRef
MCP2551
CANTX
CANRX
P2
Header 3
K1
G5SB
D2
D3
Diode 1N4007
R1
470
R2
1k
R3
10k
Q1
2N3904
RC0
P4
Header 3
K2
G5SB
D5
D6
R5
470
R7
1k
R9
10k
Q2
2N3904
RC1
RB5
RB4
D7
D8
R10
470
R11
470
S1
DHT22
R8
470
RB2
P3
Header 2
RA0
R4
4.7k
P5
Header 2
RA1
R6
4.7k
J1
ISP
RB6
RB7
VPP
J2
ICD Power
R12
10k
S2
Reset
C9
100nF
U3
18F2680
MCLR
RA0
RA1
RA2
RA3
RA4
RA5
OSC1
OSC2
RC0
RC1
RC2
RC3
RB7
RB6
RB5
RB4
RB3
RB2
RB1
RB0
VCC
RC7
RC6
RC5
RC4
CANRX
CANTX
SDA
SCL
Y1
16MHz
C12
20pF
C13
20pF
J3
I2C
R20
10k
R22
10k
P6
Entree 220
C7
390nF
R13
300
D9
1N4007
D10
1N4007
Z1
12V
R14
560
C8
220uF
U2
PC817
L1
R15
470
R16
1k
RB0
P7
Entree 220
C10
390nF
R17
300
D11
1N4007
D12
1N4007
Z2
12V
R18
560
C11
220uF
U4
PC817
L2
R19
470
R21
1k
RB1
Title
Size
A4
Number
Revision
Date:
09/06/2014
Sheet of
File:
D:\Temp\Olinuxino\Altium\CAN\CAN.SchDoc
Drawn By: