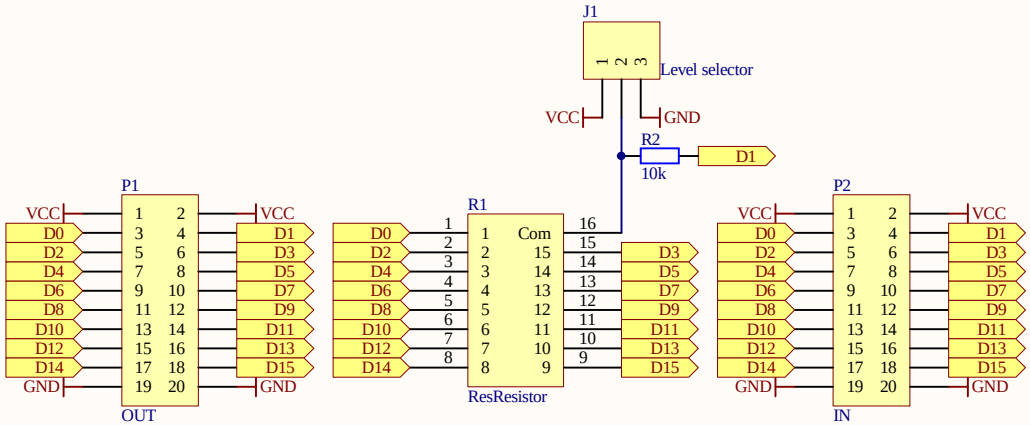

Title		
Size A4	Number	Revision
Date: 01/09/2014		Sheet of
File: D:\Temp\..\IOResistor.SchDoc		Drawn By: