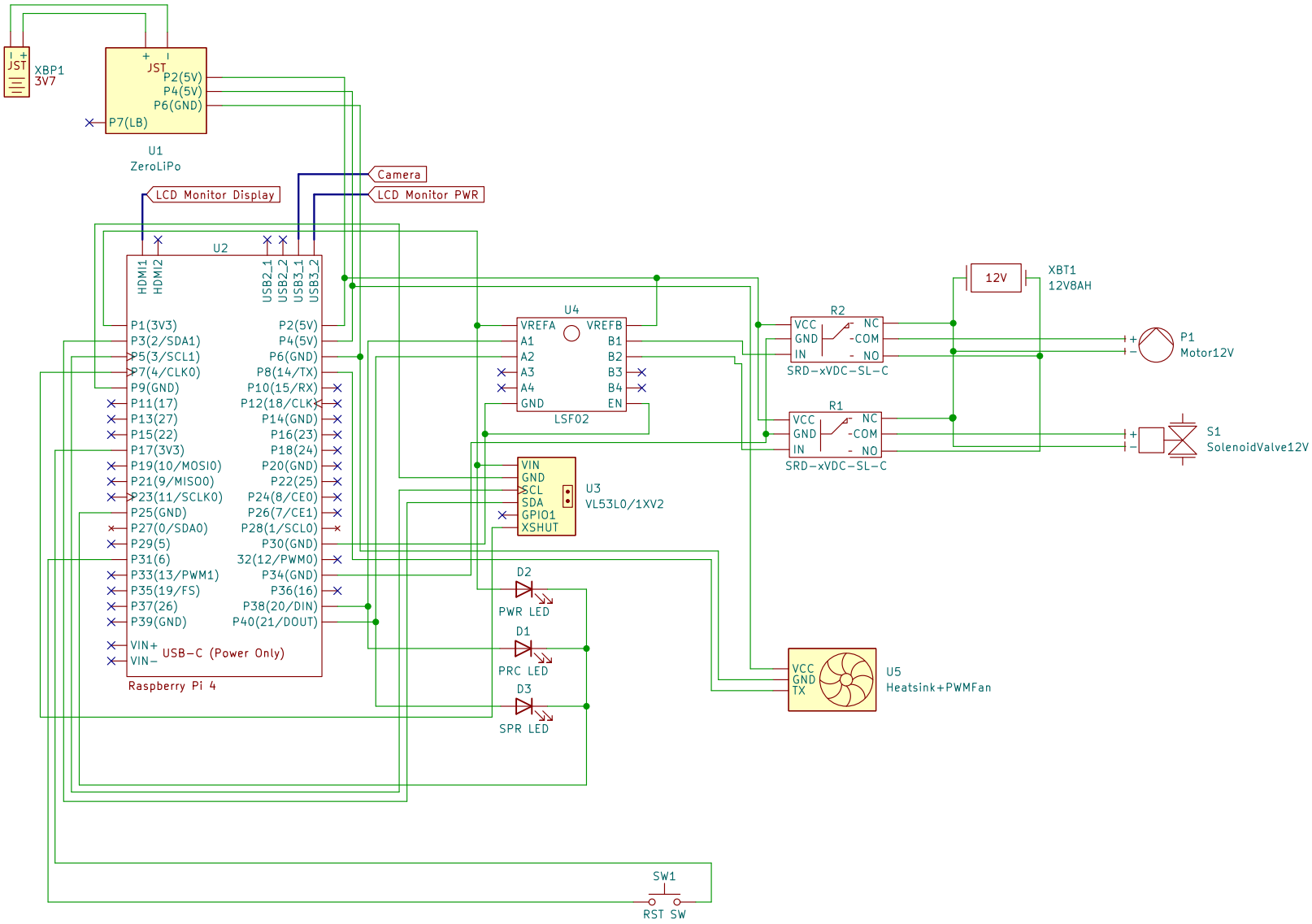

There Goes Mangoes

Sheet: /

File: do2.wirings.kicad_sch

Title: Map of Wirings

Size: USLetter	Date: 2023−06−13	**Rev: 1.0**
KiCad E.D.A. kicad (6.0.10)		Id: 1/1