SMIC 40 nm LL Calibre LVS Release Note

Version: V1.15_0

Version Date: 2017-06-22

SMIC CONFIDENTIAL

SMIC Confidential
The information contained herein is the exclusive property of SMIC, and shall not be distributed, reproduced or disclosed in whole or in part without prior written permission of SMIC.

1.0 Scope

This document describes the Calibre LVS of 40 nm Logic Low Leakage release. Specific updates to Calibre LVS release are discussed within.

1.1 Contents

LVS deck supporting Calibre to xRC flow :

SMIC_CalLVS_40LL_1125_V1.15_0.lvs

Empty subckt netlist : empty_subckt.sp

1.2 Calibre LVS deck options setup

#DEFINE TOPMETAL 10

This option is used to choose the total metal number. Please change it to 4/5/6/7/8/9/10 according to design required. The default value is 10.

#DEFINE TOP_METAL_NUM double

This option is used to define the top metal type. If choose double, it means two top metals. If choose single, it means one top metal. The default value is double. When this option is changed to single, the option TOPMETAL can not be set to 10. When this option is changed to double, the option TOPMETAL can not be set to 4.

#DEFINE TM_METAL_TYPE 0

This option is used to define top metal type. The value can be 0 or 1. If the value is set to 0, TM2(122:0) is chosen as top metal2, TM2 width is 0.4um , and TM2 thickness is 9K, If the value is set to 1, MTT2(231:0) is chosen as top metal2, MTT2 width is 1.5um, and MTT2 thickness is 34k, Default value is 0.

#DEFINE ALPA_THICK THIN

This option is used to define thickness of ALPA. The value can be thin or thick. If the value is set to thin, ALPA thickness is 14.5K, this model name is ralpa_2t_ckt or ralpa_3t_ckt; If the value is set to thick, ALPA thickness is 28K, the model name ralpa_2p8_2t_ckt or ralpa_2p8_3t_ckt; Default value is thin.

#DEFINE RC_RUN FALSE

This option is used for XRC RUN. If the value is set to TRUE, then it is for XRC flow, more parameters will be extracted. If the value is set to FALSE, it is only for normal LVS flow. The default value is FALSE.

#DEFINE Back_Annotation_Flow 2

SMIC Confidential
The information contained herein is the exclusive property of SMIC, and shall not be distributed, reproduced or disclosed in whole or in part without prior written permission of SMIC.

SMIC CONFIDENTIAL

This option is used to choose the back annotation flow. The value can be 1 or 2, Default value is 1.
If the value is set to 1: extracted view flow is chosen, LVS will reserve more parameters for back-annotation. If the value is set to 2: netlist flow, LVS will not reserve the back-annotation parameters.
For BJT's back annotation, XRC_RUN needs to be TRUE.

#DEFINE ERCCHECK TRUE

This option is used to choose ERC Check or not. If the value is set to TRUE, the ERC Check will be turned on. If the value is set to FALSE, the ERC Check will be turned off. The default value is TRUE.

#DEFINE NWELL_FLOATING_CHECK FALSE

This option is used to choose floating nwell check or not. The value can be TRUE or FALSE. Default value is FALSE.

#DEFINE NWELL_NOT_TO_POWER_CHECK TRUE

This option is used to choose nwell not connecting to power check. The value can be TRUE or FALSE. Default value is FALSE.

#DEFINE PWELL_NOT_TO_GROUND_CHECK TRUE

This option is used to choose pwell not connecting to ground check. The value can be TRUE or FALSE. Default value is FALSE.

#DEFINE PARASI_DIO_CMP_NW FALSE

This option is used to compare NW diode number and comnnectivity or not for parasitic DIODE. The value can be TRUE or FALSE. Default value is FALSE.

#DEFINE PARASI_DIO_Property_CMP_NW FALSE

This option is used to compare NW parasitic diode parameter or not. The value can be TRUE or FALSE. Default value is FALSE.

#DEFINE PARASI_DIO_CMP_DNW FALSE

This option is used to compare DNW diode number and comnnectivity or not for parasitic DIODE. The value can be TRUE or FALSE. Default value is FALSE.

#DEFINE PARASI_DIO_Property_CMP_DNW FALSE

This option is used to compare DNW parasitic diode parameter or not. The value can be TRUE or FALSE. Default value is FALSE.

#DEFINE DIO_PJ FALSE

Compare PJ parameter or not for DIODE.The value can be TRUE or FALSE(Upper Case).
Default value is FALSE.

SMIC Confidential
The information contained herein is the exclusive property of SMIC, and shall not be distributed, reproduced or disclosed in whole or in part without prior written permission of SMIC.

SMIC CONFIDENTIAL

#DEFINE MOS _MISMOD 0

Define the mos mismatch model or not. The value can be 0 or 1;
MOS_MISMOD 0: Turn off the mismatch flag mismod for mos;
MOS_MISMOD 1: Turn on the mismatch flag mismod for mos;
Default value is 1.

#DEFINE MOS_GLOBALMOD 1

Define the mos global model or not. The value can be 0 or 1;
MOS_GLOBALMOD 0: Turn off the globalmod for mos;
MOS_GLOBALMOD 1: Turn on the globalmod for mos;
Default value is 1.

#DEFINE MOS_LPEMOD 1

Define the lpemod for mos. The value can be 0 or 1;
MOS_LPEMOD 0: Turn off the lpemod for mos;
MOS_LPEMOD 1: Turn on the lpemod for mos;
Default value is 1.

#DEFINE RES_MISMOD 1

This option is used to choose resistor mismatch flag. If the value is set to 1, then mismatch flag will be turned on. If the value is set to 0, then mismatch flag will be turned off. The default value is 1.

#DEFINE BJT_MISMOD 1

This option is used to choose BJT mismatch flag. If the value is set to 1, then mismatch flag will be turned on. If the value is set to 0, then mismatch flag will be turned off. The default value is 1.

#DEFINE MOM_MISMOD 1

This option is used to choose MOM mismatch flag. If the value is set to 1, then mismatch flag will be turned on. If the value is set to 0, then mismatch flag will be turned off. The default value is 1.

#DEFINE VAR_MISMOD 1

This option is used to choose logic varactor mismatch flag. If the value is set to 1, then mismatch flag will be turned on. If the value is set to 0, then mismatch flag will be turned off. The default value is 1.

#DEFINE SRAM_MISMOD 1

This option is used to define the sram parameters during XRC extraction. The value can be 0,1,2,3. If the value is set to 0, turn off the mismatch flag mismod, and turn on globalmod; If the value is set to 1, turn on the mismatch flag mismod,and turn on globalmod; If the value is set to 2, turn off the mismatch flag mismod,and turn off globalmod; If the value is set to 3, turn on the mismatch flag mismod, and turn off

SMIC Confidential
The information contained herein is the exclusive property of SMIC, and shall not be distributed, reproduced or disclosed in whole or in part without prior written permission of SMIC.

SMIC CONFIDENTIAL

globalmod; The default value is 1.

#DEFINE SRAM_GLOBALMOD 0

Define the sram globalmod. The value can be 0,1;
SRAM_GLOBALMOD 0: turn off the globalmod for sram;
SRAM_GLOBALMOD 1: turn on the globalmod for sram;
Default value is 1.

#DEFINE CASE_SENSITIVITY FALSE

This option is used to define whether to control CASE SENSIVITY during circuit parsing and comparison.Default value is FALSE. The value can be TRUE or FALSE(Upper Case).

#DEFINE SPECIAL_GATES FALSE

This option is used to extract special loigc mos as a capacitor with holes on gates. Default value is FALSE. The value can be TRUE or FALSE (Upper Case).

#DEFINE PSFLAG_MOM TRUE

Define whether to extract and compare psflag for MOM.
The value can be TRUE or FALSE(Upper Case).
Default value is TRUE.

#DEFINE EFUSE_RES FALSE

This option is used to extact EFUSE_res or not. If the value is set to FALSE, EFUSE_res can't be extracted; If the value is set to TRUE, EFUSE_res should be extracted, The default value is FALSE.

1.3 LVS Mark Layer drawn

Dummy layer name	Gds No	Description	Purpose
DMPNP	(134;0)	Bipolar device recognition. For pnp, DMPNP should enclose the NW. For npn, DMPNP should enclose the DNW.	DRC/LVS
DSTR	(138;0)	Diode device recognition. For N type diode, DSTR should enclose n type active area. For P type diode, DSTR should enclose p type active area.	DRC/LVS

SMIC Confidential
The information contained herein is the exclusive property of SMIC, and shall not be distributed, reproduced or disclosed in whole or in part without prior written permission of SMIC.

SMIC CONFIDENTIAL

		For NW diode, DSTR should enclose the NW. For DNW diode, DSTR should enclose the DNW.	
RESP1	(96;0)	Poly resistor recognition layer. Pls refer to RESP1 rule.	DRC/LVS
RESAA	(97;0)	AA resistor recognition layer. Pls refer to RESAA rule.	DRC/LVS
RESNW	(95;0)	NW resistor recognition layer. Pls refer to RESNW rule.	DRC/LVS
RESP3T	(96;1)	Poly three terminals resistors rccognition layer. It should be the same size with RESP1.	DRC/LVS
VARMOS	(93;0)	MOS Varactor recognition layer. VARMOS should enclose mos varactor area.	DRC/LVS
MOMDMY	(211;1)	MOM recognition layer. MOMDMY should enclose MOM device area.	DRC/LVS
DNWTR	(19;2)	Six terminal DNW MOS dummy layer. DNWTR should cover the dnw mos area.	DRC/LVS
RFMOSD	(182,0)	Dummy for RF MOSFET Drain	DRC/LVS
VARJUN	(94,0)	Dummy for Junction Diode	DRC/LVS
HRPDMY	（210,0）	Dummy pattern for HRP Resistor	DRC/LVS
INDMY	（212,0）	Dummy for Inductor	DRC/LVS
DUMBM	（90,0）	Block layer for dummy operation on all metal	DRC/LVS
RESCKT	（131,3）	LVS dummy layer for subckt resistor	LVS

SMIC CONFIDENTIAL

SMIC Confidential
The information contained herein is the exclusive property of SMIC, and shall not be distributed, reproduced or disclosed in whole or in part without prior written permission of SMIC.

MOSCKT	(131,2)	LVS dummy layer to distinguish bsim mos and subckt mos	LVS
RFSD	(181;3)	RF MOS of even finger with S/D permute for LVS	LVS
DGV	(29;1)	Dummy layer for underdriver device	LVS
LRSRAM	(60,5)	LVS dummy layer for Q374 and H374 SRAM cells	LVS
DPSRAM	(60,4)	LVS dummy layer for DP576,DPH576,DP974,DP1.944 SRAM cells	LVS
D2SRAM	(60,11)	LVS dummy layer for DP589 SRAM cells	LVS
RFSRAM	(60,9)	LVS dummy layer for F741 and F1158 SRAM cells	LVS
DNSRAM	(60,2)	LVS dummy layer for Q299 SRAM cells	LVS
PLDMK	(131,4)	LVS marking layer for device dummy poly	LVS
PCAP	(93,2)	Dummy for mos varactor in pwell	DRC/LVS
NCAP	(93,1)	Dummy for mos varactor in nwell	DRC/LVS
OVERDR	(125,3)	Dummy layer for overdriver device	DRC/LVS
TGV	(125,1)	Dummy layer for underdriver device	DRC/LVS
DIFRES	(97;3)	Dummy silicide diffusion resistor layer	LVS
PLRES	(96,3)	Dummy silicide poly resistor layer	LVS
BIPOLA	(159,1)	Placed over NPN and PNP emitters.It's used to generated PH and eliminate halos to improve performance	LVS

SMIC CONFIDENTIAL

SMIC Confidential
The information contained herein is the exclusive property of SMIC, and shall not be distributed, reproduced or disclosed in whole or in part without prior written permission of SMIC.

EFUSE	(81,2)	MARK layer for Efuse	DRC/LVS
GTFUSE	(81,1)	MARK layer for Efuse gate	DRC/LVS
LDBK	(216,5)	LDMOS function area. Note: pls ensure that every LDMOS device has only one LDBK.	LVS
RF3T	（183,2）	Block layer for 3 terminal RF passive device	DRC/LVS
NFDMK	(131,5)	LVS mark layer RFMOS and varactor, LVS mark layer for inductor's ring number	LVS
MOMP1	(211,3)	LVS mark layer for MOM array terminal	LVS
MOMP2	(211,4)	LVS mark layer for MOM array terminal	LVS
MOMMES	(211,5)	LVS mark layer for MOM array	LVS
RFDN5T	(181,7)	LVS mark layer for 5-terminal RF p-type MOS . The 5th terminal is psub	LVS
RFDN6T	(181,4)	LVS mark layer for 6-terminal RF MOS in deep nwell. The sixth terminal is psub	LVS
INDR	(212,1)	LVS mark layer for Inductor radius calculation	LVS
MOMCOL	(211,7)	LVS mark layer for MOM column number	LVS
MOMROW	(211,8)	LVS mark layer for MOM row number	LVS
MOM33	(211;9)	LVS mark layer for 3.3v MOM	LVS
MOM50	(211;10)	LVS mark layer for 5v MOM	LVS

SMIC CONFIDENTIAL

1.4 Device Supported

MOS: n11ll_ckt p11ll_ckt nt11ll_ckt nhvt11ll_ckt phvt11ll_ckt nlvt11ll_ckt plvt11ll_ckt n25ll_ckt p25ll_ckt nt25ll_ckt nod33ll_ckt pod33ll_ckt nud18ll_ckt pud18ll_ckt

SMIC Confidential
The information contained herein is the exclusive property of SMIC, and shall not be distributed, reproduced or disclosed in whole or in part without prior written permission of SMIC.

ntod33ll_ckt ntud18ll_ckt n11ll_dnw_ckt nlvt11ll_dnw_ckt nulvt11ll_dnw_ckt nhvt11ll_dnw_ckt n25ll_dnw_ckt nud18ll_dnw_ckt nod33ll_dnw_ckt nld50ll_ckt pld50ll_ckt nld50llod_ckt pld50llod_ckt nulvt11ll_ckt pulvt11ll_ckt

DIODE: ndio11ll ntdio11ll pdio11ll ndio11llhvt pdio11llhvt ndio11lllvt pdio11lllvt ndio11llulvt pdio11llulvt nwdioll ndio25ll pdio25ll ntdio25ll dnd11ll dnd25ll rwd11ll dnwd11ll parasitic_nwd parasitic_rwd parasitic_dnwd

BJT: pnp11a100ll_ckt pnp11a25ll_ckt pnp11a4ll_ckt pnp25a100ll_ckt pnp25a25ll_ckt pnp25a4ll_ckt npn11a100ll_ckt npn11a25ll_ckt npn11a4ll_ckt npn25a100ll_ckt npn25a25ll_ckt npn25a4ll_ckt pnp11a100ll_sba_ckt pnp11a25ll_sba_ckt pnp11a4ll_sba_ckt pnp25a100ll_sba_ckt pnp25a25ll_sba_ckt pnp25a4ll_sba_ckt npn11a100ll_sba_ckt npn11a25ll_sba_ckt npn11a4ll_sba_ckt npn25a100ll_sba_ckt npn25a25ll_sba_ckt npn25a4ll_sba_ckt

RESISTOR: rnwsti_3t_ckt rnwaa_3t_ckt rndifsab_3t_ckt rndif_3t_ckt rpdifsab_3t_ckt rpdif_3t_ckt rpposab_3t_ckt rppo_3t_ckt rnposab_3t_ckt rnpo_3t_ckt rhrpo_3t_ckt rnwsti_2t_ckt rnwaa_2t_ckt rndifsab_2t_ckt rndif_2t_ckt rpdifsab_2t_ckt rpdif_2t_ckt rpposab_2t_ckt rppo_2t_ckt rnposab_2t_ckt rnpo_2t_ckt rhrpo_2t_ckt rm1_2t_ckt rm2_2t_ckt rm3_2t_ckt rm4_2t_ckt rm5_2t_ckt rm6_2t_ckt rm7_2t_ckt rm8_2t_ckt rtm1_2t_ckt rtm2_2t_ckt rm1_3t_ckt rm2_3t_ckt rm3_3t_ckt rm4_3t_ckt rm5_3t_ckt rm6_3t_ckt rm7_3t_ckt rm8_3t_ckt rtm1_3t_ckt rtm2_3t_ckt ralpa_2t_ckt ralpa_3t_ckt ralpa_2p8_2t_ckt ralpa_2p8_3t_ckt rutm_2t_ckt rutm_3t_ckt

CAPACITOR: mom_2t_ckt;mom_3t_ckt mom_4t_ckt mom_5t_ckt mom33_3t_ckt mom33_2t_ckt mom33_4t_ckt mom33_5t_ckt mom50_3t_ckt mom50_2t_ckt mom50_4t_ckt mom50_5t_ckt ;

VARACTOR: pvar11ll_ckt pvar25ll_ckt nvar11ll_ckt nvar25ll_ckt dnwpvar11ll_ckt dnwpvar25ll_ckt dnwnvar11ll_ckt dnwnvar25ll_ckt

SRAM: dplnfetpd_ckt dplnfetwl_ckt dplnfetpu_ckt rflnfetpd_ckt rflnfetwla_ckt

SMIC Confidential
The information contained herein is the exclusive property of SMIC, and shall not be distributed, reproduced or disclosed in whole or in part without prior written permission of SMIC.

SMIC CONFIDENTIAL

rflnfetwlb_ckt rflnfetpu_ckt dpcnfetpd_ckt dpcnfetwla_ckt dpcnfetwlb_ckt dpcnfetpu_ckt dslnfetpd_ckt dslnfetwl_ckt dslnfetpu_ckt lshnfetpd_ckt lshnfetwl_ckt lshnfetpu_ckt

ERC Check rules:

1) Report nodes with a path to ground but not power
2) Report nodes with a path to power but not ground
3) Report nodes without a path to both power and ground
4) Report nodes without label
5) Report MOS core gate connect to power or ground nets
6) Report pwell pick-up layer ptd connect to power nets
7) Report pwell pick-up layer ptap_outside_dnw connect to non-ground nets
8) Report 1.1V MOS S/D connect to both Power and Ground nets
9) Report floating nwell which has no pick up
10) Report Nwell not connecting to power net
11) Report Pwell not connecting to ground net

Compare Tolerance and Device Combine

The default tolerance used for distance or dimension is 5%.
The default tolerance used for integer parameter is 0%.

MOS:

Parallel combined allowed
Series combined not allowed
LVS Compare: W&L(LL MOS)

BJT:

Parallel combined allowed
Series combined not allowed
LVS Compare: model name

RES:(subckt model)

Parallel combined allowed
Series combined allowed
LVS Compare: W,L

SMIC Confidential
The information contained herein is the exclusive property of SMIC, and shall not be distributed, reproduced or disclosed in whole or in part without prior written permission of SMIC.

SMIC CONFIDENTIAL

RES:(R model)

Parallel combined allowed
Series combined allowed
LVS Compare: R

CAP MOM

Parallel combined not allowed
Series combined not allowed
LVS Compare: l nn bm tm(LL)

DIODE

Parallel combined allowed
Series combined not allowed
LVS Compare: area or area&pj

Varactor

Parallel combined not allowed
Series combined not allowed
LVS Compare: LR NR NF

1.5 QA Details

Test Case Type	Results	Known Problems
Test Pattern	pass	NA
SMIC PDK	pass	NA

1.6 FAQ

@ Calibre LVS licenses are needed.
@ Calibre LVS Version for test: 2014_3_16_15
@ Please include "empty_subckt.sp" file in the schematic netlist when run the subckt devices.
Syntax for how to include this file:
.include ./empty_subckt.sp

1.7 Revision History

SMIC Confidential
The information contained herein is the exclusive property of SMIC, and shall not be distributed, reproduced or disclosed in whole or in part without prior written permission of SMIC.

SMIC CONFIDENTIAL

```
// V1.15_0   2017/06/16 Carly  Modified base on below documents:                                          //
//                                Logic Design Rule: TD-LO40-DR-2001 Rev.:6                                //
//                                                   (Tech Dev. Rev.:1.12)                                 //
//                                Logic Spice Model: TD-LO40-SP-2001 Rev.:3                                //
//                                                   (Tech Dev. Rev.:1.15)\                                //
//                             what's modified:                                                            //
//                                1) Remove the switch "IO 1825/1833";                                     //
//                                2) Delete the 3.3v device since no model for these devices;              //
//                                3) Add MARKS into ptd, add "LVS SPICE REPLICATES DEVICE:YES","LVS SPICE STRICT WL"  //
//                                4) Change XRC/CCI QUERY to QUERY XRC/CCI                                 //
//                                5) update rwd11ll area extraction from count DSTR area to rwell area     //
//                                6) Standard the CONNECT part to format "connect x y by z"                //
//                                7) Update dw of rnposab_2t_ckt, rnposab_3t_ckt : 1.27E-8 -> 1.265E-8     //
//                                8) Add parameter "R" for resistor for PERC when BACK_ANNOTATION = 1      //
//                                9) Add GT_all and replace GT by iGT for none layer definition            //
//                                10) Add switch "PSFLAG_MOM" and set default to true.                     //
//                                11) Delete DONUT, STAMP from LVS to avoide hierarchy distroyed.          //
//                                12) Delete unused nwellring, pw_nw ALPA_NORES, AA_SN & AA_SP.            //
//                                13) Delete ntap and replace by ntd in ERC:ntd_to_ground.                 //
//                                14) Update the none layer definition by format: one device by on device. //
//                                15) Modify switch "XRC_RUN" to "RC_RUN".                                 //
//                                16) Add terminal description for diode.                                  //
//                                17) Change MOS_MODE & NTMOS_MODE to MOS_MISMODE, MOS_GLOBALMOD & MOS_LPEMOD.  //
//                                18) Replace AA by iAA for none layer definition.                         //
//                                19) Replace MOM_POLY by ppoly for 3rd terminal of mom.                   //
//                                20) Delete the unused layer and connection: efpoly.                      //
//                                21) Delete the RF logic operation to decrease runtime.                   //
//                                22) Remove metal*b for all metal option and update metal4 definition for TOPMETAL =5  //
//                                23) remove MOM capacitor parameters : mtl1,mtl2                          //
//                                24) Not ldmos terminal layer from ntd,ptd,nsd,psd to avoid RC double count. //
//                                25) Add 3.3v & 5v mom: mom33_2t_ckt/mom33_3t_ckt/mom33_4t_ckt/mom33_5t_ckt/mom50_2t_ckt//
//                                    mom50_3t_ckt/mom50_4t_ckt/mom50_5t_ckt                               //
//                                26) Optimize the SA/SB formula to tcl proc.                              //
//                                27) Add PDBA Flow for good performance of hierarchy keep.                //
//                                28) Update mom2t/3t terminal layer to distinguish with mom array's.      //
//                                29) Remove "NOT dnw" from "ndio11lulvt's seed layer".                    //
// ------- ---------- ----- ------------------------------------------------------------------------------ //
```

1.8 Important Notes on usage and Known problems

1. Please set LVS with option "RC_RUN"=FALSE first to guarantee the LVS result clean or not. If LVS result is clean with “RC_RUN”=FALSE, then set the option "RC_RUN"=TRUE to run LVS+RC extraction for post-layout simulation.
2. The layer SUBD(131;1) is used to logically separate the substrate for LVS. USE of SUBD doesn’t in any way affect the mask build process or otherwise provide any type of real physical isolation. Be aware of the possible problems of using this layer.
3. Please enter the LVS POWER and GROUND name in below corresponding place of LVS deck to get right LVS/ERC results.

   LVS GROUND NAME "VSS" "SAVSS?" "?gnd?" "?GND?" "?VSS?" "?vss?"

   LVS POWER NAME "VDD" "SAVDD?" "?VDD?" "?VCC?" "?vcc?" "?vdd?"
4. Text layer and metal layer are used for LVS text and port recognition.

   M1(61;0) M1TXT(141)

SMIC Confidential
The information contained herein is the exclusive property of SMIC, and shall not be distributed, reproduced or disclosed in whole or in part without prior written permission of SMIC.

SMIC CONFIDENTIAL

M2(62;0) M2TXT(142)

M3(63;0) M3TXT(143)

M4(64;0) M4TXT(144)

M5(65;0) M5TXT(145)

M6(66;0) M6TXT(146)

M7(67;0) M7TXT(147)

M8(68;0) M8TXT(148)

TM1(120;0) TM1TXT(120;3)

TM2(122;0) TM2TXT(122;3)

MTT2(231;0) MTT2TXT(231;3)

5. If using DCTY(139;0) in layout, then it will be not checked by LVS. Please be caution of using it.
6. The parameters “nrs” and “nrd” are calculated as “SA/W” and “SB/W” in LVS. They are computed as “A/W” and “B/W” in PDK. “A” and “B” are distances from gate edge to the middle point of CT. The difference is due to there are a lot of irregular patterns in real layout. While Pcell layout is always standard. However, the different calculation method will not cause big impact when simulation

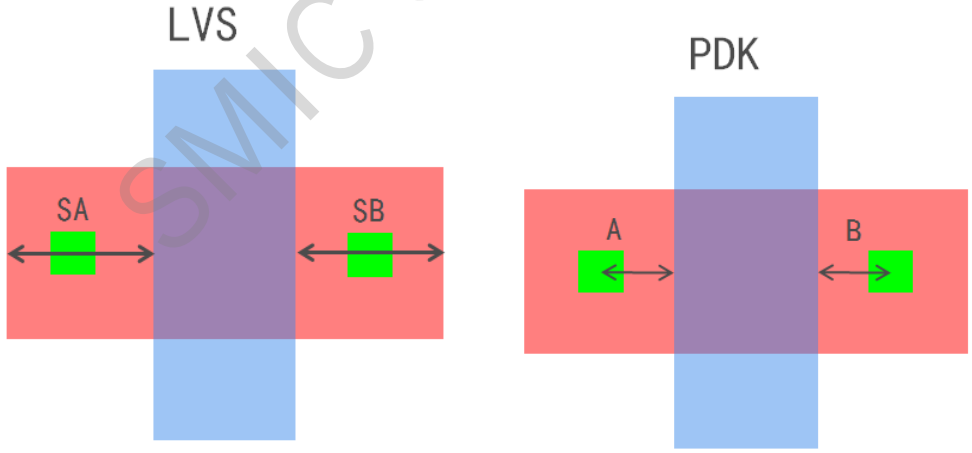

SMIC CONFIDENTIAL

SMIC Confidential
The information contained herein is the exclusive property of SMIC, and shall not be distributed, reproduced or disclosed in whole or in part without prior written permission of SMIC.

7. The parameters “AS”, “AD”, “PS” , “PD”, “SA”, “SB” and “SD” calculation values in LVS are not consistent with PDK netlist when treating multi-finger mosfet s. LVS treat each multiple fingers mosfets with several device (nf=1). PDK treat multi-finger mosferts as one device(nf>1).

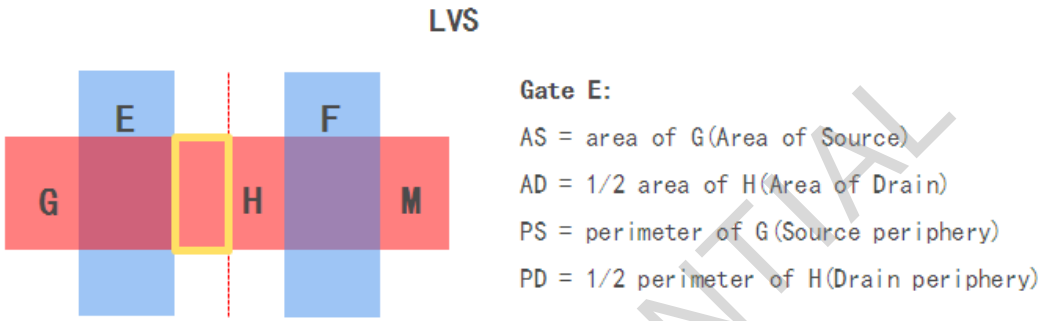

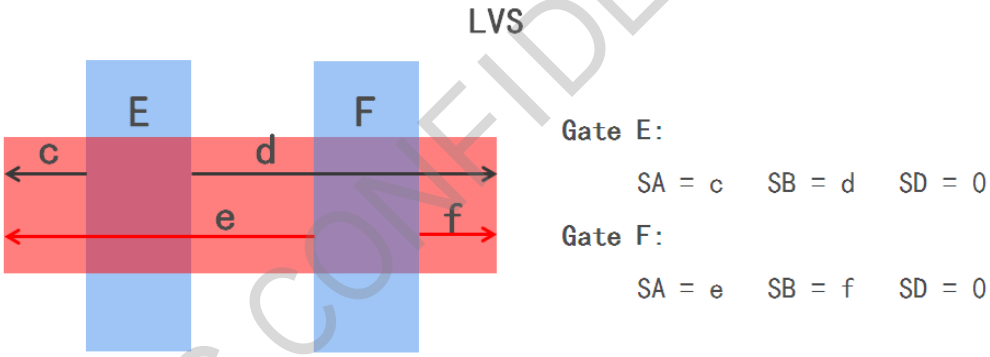

SMIC CONFIDENTIAL

SMIC Confidential
The information contained herein is the exclusive property of SMIC, and shall not be distributed, reproduced or disclosed in whole or in part without prior written permission of SMIC.