Table of Contents

GPS Database Model 2
MESH SPEC COMMANDS 4
LIB COMMANDS 7
TECH FILE COMMANDS 8
CELL COMMANDS 9
INSTANCE COMMANDS 12
REGION COMMANDS 13
PIN COMMANDS 14
NET COMMANDS 15
WIRE/VIA COMMANDS 16
PLOC COMMANDS 17
BLOCKAGE COMMANDS 18
MISCELLANEOUS COMMANDS 19

GPS DataBase Model

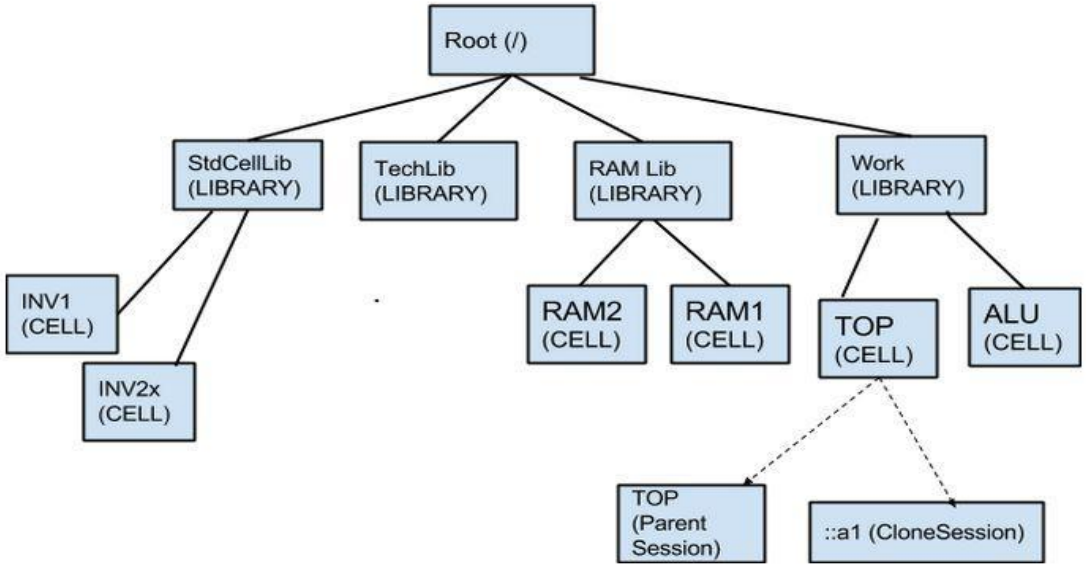

Allowed Object Names	
Object Type	**Example**
Cell	*/work/top*
Pin	*/work/top/pin:vdd*
instance	*/work/top/inst1*
instance pin	*/work/top/inst1:vdd*
instance	*/work/top/inst1/inst2*
instance pin	*/work/top/inst1/inst2:vss*
net	*/work/top/net:vdd*
Via model	*/work/top/viam:model1*
Regions	*/work/top/r1*
Routing Blockages	*/work/top/rb:r1*
Placement Blockage	*/work/top/pb:p1*
Plocs	*/work/top/ploc:ploc1*
Layer	*/tech/lyr:M1*
Via Model	*/tech/vm:model1*
Via Rule	*/tech/vr:rule1*
Route Mesh spec	*/work/top/rm:RM1*
Via Mesh Spec	*/work/top/vm:VM1*
std cell strap spec	*/work/top/strap:name*
ploc mesh spec	*/work/top/pm:name*
ring spec	*/work/top/ring:name*
pin tapping spec	*/work/top/pin_tapping:name*
switc mesh spec	*/work/top/sm:name*
power spec	*/work/top/power:name*
rampup spec	*/work/top/rc:name*
Wire	*CsmUniqueID*
Via	*CsmUniqueID*

© 2015 Apache Design, Inc. – Subsidiary of ANSYS INC

Root :
The root level of the data model hierarchy is denoted by a “/” (slash) and represents a collection of libraries.

Library :
Libraries offer a way to logically group design information is denoted by “/library” and represents collection of cells
Cell :
Cell is actual implementation. Cell will have one base/default version and may have multiple modified versions.
A base version is accessed by /<library name>/<cell name>[::p]
For example : /work/TOP , /work/TOP::p

Any other version like a clone session is accessed by /<library name>/<cell name>::<version name>
For example : /work/TOP::c1

Named and Non Named Objects :
Cell contains named objects and non named objects.

Named objects are nets, instances, pins & spec instances and Non named objects are via,route & wire

© 2015 Apache Design, Inc. – Subsidiary of ANSYS INC

MESH SPEC COMMANDS

Command	Options	Allowed Arguments	Allowed Filters	Description	Example
db query	routemeshspec	layer nets dir drop_via_layers width spacing pitch offsets restrict_via_cuts_to_overlap offset_from_blockages offset_from_exclude_scopes via_rules via_between_parallel_metals parallel_metals_via_spec via_models via_occupancy_percentage via_num_cuts via_occupancy short_check min_spacing spec_boundary staples wires vias obj_type	-o | out <filename> -layers {} -nets { } -via_model { <> <> } -via_rule {<> <> }	layer :Returns the metal layer name for which wires need to be created nets :Returns the list of nets dir :Returns direction drop_via_layers :Returns the metal layer names for which via has been dropped width :Returns width spacing :Returns spacing pitch :Returns pitch offsets :Returns offsets restrict_via_cuts_to_overlap : Returns the status of Restrict via to overlap area offset_from_blockages :Returns blockage offset offset_from_exclude_scopes :Returns offset from exclude scopes via_rules :Returns list of viarules chosen parallel_metals_via_spec: Returns 0|1 if it is disabled/enabled via_pattern_between_parallel_metals: Returns length and spacing values via_models : Returns the via models used. via_occupancy_percentage : Returns the x and y percentage for vias. via_num_cuts : Returns the number of via cuts in x and y direction via_occupancy : Returns the absolute value of via size in x and y direction. short_check 0/1 : Returns the status of short allowance in route mesh spec spec_boundary : Returns Spec boundary. staples : Returns 0/1 based on whether its a staple based design or not. min_spacing: Returns Distance to aviod short wires : Returns wire Ids, supports -nets/-layer filters vias : Returns via ids; supports -layer/-nets/-via_model/-via_rule obj_type : Returns object type; Here it is Routemesh	db query /work/TOP/rm:TOP_M6 vias -via_rule VIAGEN56
db query	viameshspec	nets drop_via_layers offsets offset_from_blockages offset_from_exclude_scopes via_rules via_between_parallel_metals parallel_metals_via_spec via_models via_occupancy_percentage via_num_cuts via_occupancy short_check spec_boundary vias obj_type	-o | out <filename> -layers {} -nets { } -via_model { <> <> } -via_rule {<> <> }	nets :Returns the list of nets drop_via_layers :Returns the top metal layer name for which via need to be dropped offsets: Returns spec offsets offset_from_blockages :Returns blockage offset offset_from_exclude_scopes :Returns offset from exclude scopes via_rules :Returns list of viarules chosen via_between_parallel_metals Returns 0|1 if it is disabled/enabled parallel_metals_via_spec: Returns length and spacing values via_models : Returns the via models used. via_occupancy_percentage : Returns the x and y percentage for vias. via_num_cuts : Returns the number of via cuts in x and y direction via_occupency : Returns the absolute value of via size in x and y direction. short_check 0/1 : Returns the status of short allowance in route mesh spec spec_boundary : Returns spec boundary applied for the spec. vias : Returns via ids; supports -layer/-nets/-via_model/-via_rule filters obj_type : Returns object type; Here it is Viamesh	db query /work/TOP/vm:TOP_VM6 vias -via_rule VIAGEN56

© 2015 Apache Design, Inc. – Subsidiary of ANSYS INC

MESH SPEC COMMANDS

db query	switchmeshspec	master inst_prefix offsets logical_conn spec_boundary spacing obj_type	-o|out <filename>	Master: Returns master cell used inst_prefix: Returns inst prefix used in that spec offsets: Returns Offsets logical_conn: Returns Logical connectivity of the switch cell spec_boundary : Returns the Spec boundary spacing : Returns X-pitch and Y-pitch Obj_type: Returns object type; Here it is Switchmesh	db query /work/TOP/sm:TOP_SW1 master
db query	Macro pintapping spec	route_layer pin_layers all_pin_layers nets all_nets insts all_insts all_blocks via_rules vias_between_parallel_metals parallel_metals_via_spec via_models via_occupany_percentage via_num_cuts via_occupancy restrict_via_cuts_to_overlap vias obj_type	-o|out <filename> -layer -net	route_layer : Returns the metal layer used to drop vias pin_layers : Returns the pin layers selected for pin tapping. all_pin_layers: Returns the status 0/1; that if all the pins are considered for pin tapping. all_nets : Returns the status that if all the nets are used. nets : Returns the nets all_insts: Returns the status 0/1; that if all the insts are considered for pin tapping. insts: Returns the insts list all_blocks: Returns the status 0/1; that if all the blocks are considered for pin tapping. via_rules :Returns list of viarules chosen via_between_parallel_metals Returns 0|1 if it is disabled/enabled parallel_metals_via_spec: Returns length and spacing values via_models : Returns the via models used. via_occupany_percentage : Returns the x and y percentage for vias. via_num_cuts : Returns the number of via cuts in x and y direction via_occupancy : Returns the absolute value of via size in x and y direction. restrict_via_cuts_to_overlap: Returns the status. vias : Returns via ids; supports -layer/-nets/-via_model/-via_rule filters obj_type : Returns object type; Here it is Routemesh	db query /work/TOP/pin_tapping:PT vias
db query	Bump array spec	layer spacing offsets spec_boundary pads obj_type	-o|out <filename> -type -net	layer : Retuns the layer spacing: Returns the X-pitch, Y-pitch offsets: Returns ofset values spec_boundary : Returns the spec boundary bbox : returns the bbox of the mesh pads: Returns the pads, Filters used: -type(Power/Ground) -net(Net name) obj_type: Returns the object type; Here it is Plocmesh	db query /work/TOP/pm:PM1 layer

© 2015 Apache Design, Inc. – Subsidiary of ANSYS INC

MESH SPEC COMMANDS

db query	StdCellRowSpec	layers follow_pins spec_boundary offset_from_blockages offset_from_exclude_scopes obj_type wires	-o|out <filename> -layer -net	layers : Returns the layers on which Std cell row strap is created follow_pins : Returns Pin connectivity with the nets spec_boundary : Returns the spec boundary offset_from_blockages : Returns the offset value from the blockage offset_from_exclude_scopes : Returns the offset from excluded scopes obj_type : Returns the Object type; Here it is StdRowCellStarp wires : Returns the wire by considering the filters: -net, -layer	db query /work/TOP/strap:RS1 wires
db query	Ring	window nets type drop_via_layers top bot left right wires vias obj_type	-o | out <filename> -layers {} -nets { }	window : Returns the Region bbox around which region is created nets : Returns the nets type : Returns the Ring type drop_via_layers: Returns the metal layers from which vias are dropped top : Returns the width, length and offeset value for the top edge bot : Returns the width, length and offeset value for the bottom edge left : Returns the width, length and offeset value for the Left edge right : Returns the width, length and offeset value for the Right edge wires : Retuns the wires by considering the filters: -layer, -net vias : Returns the vias; Filters: -layers, -nets obj_type : Retuns the type of the object; Here it is Ring	db query /work/TOP/ring:RING1 window

NOTE : 'db foreach' command can be used to access large lists returned by TCL query commands.

Format of command :

db foreach <variable> "query <object_name> <prop> [filters]" {<script>}

© 2015 Apache Design, Inc. – Subsidiary of ANSYS INC

LIB COMMANDS:

Command	Options	Allowed Arguments	Description	Example
db query	/	libs	Gives list of all libs available in the design.	db query libs. Currently only /work is the only library available.
db query	<libname>	cells	Gives the list of all cells in a particular library.	db query /work cells /work/r0hd_nn40_fa1tc /work/p0hd_n_filler128x /work/Switch_Cell /work/PNR_BLK

NOTE : 'db foreach' command can be used to access large lists returned by TCL query commands.

Format of command :

db foreach <variable> "query <object_name> <prop> [filters]" {<script>}

© 2015 Apache Design, Inc. – Subsidiary of ANSYS INC

TECH FILE COMMANDS:

Command	Options	Allowed Arguments	Description	Example
db query	tech	unit	Gives the tech file unit in the design	Micron
		value	Gives the value of tech file unit in design	2000
		layers	Gives the layers in the tech file	m1 via1 m2 via2 m3 via3 m4 via4 m5 via5 m6 via6 m7 rv ap co
		via_models	Gives the via models in the tech file	viam:VIA45_PBD_N viam:VIA45_PBD_S viam:VIA45_PBD_W viam:VIA45_PBS_H viam:VIA45_PBS_V viam:VIA56_1cut viam:VIA56_1cut_H viam:VIA56_1cut_
		via_rules	Gives the via rules in the tech file	viar:VIARULE32_1x2_HV viar:VIARULE43_2x2_m6_135 viar:VIARULE54_2x2_m6_135 viar:VIARULE43_2x2_m6_92 viar:VIARULE54_2x2_m6_92 viar:VIARULE43_1x2_m6_13
		sites	Gives the sites in the tech file	CORE :CORE2 :CORE4 :CORE12T :CORE12T2 :CORE12T4
		obj_type	Gives the object type	db query viar:VIARULE54_2x2_m6_92 obj_type

NOTE : 'db foreach' command can be used to access large lists returned by TCL query commands.

Format of command :

db foreach <variable> "query <object_name> <prop> [filters]" {<script>}

© 2015 Apache Design, Inc. – Subsidiary of ANSYS INC

CELL COMMANDS:

Command	Options	Allowed Arguments	Description	Example
db query	<cell>	bbox -o|out <file> type -o|out <file> height -o|out <file> width -o|out <file> boundary -o|out <file> views -o|out <file> objs -selected -o|out <file> regions -shape <rectangular | rectilinear> -hier_level {min max} -o|out <file> placement_blockages -shape <rectangular | rectilinear> -type < lef | def | user > -hier_level {min max} -o|out <file> routing_blockages -shape <rectangular | rectilinear> -layer <layer_name> -type < lef | def | user > -hier_level {min max} -o|out <file>	Used to query all the properties of a Cell. bbox --> is used to query the bbox of given cell type --> is used to query the type of given cell height --> is used to query the height of given cell width --> is used to query the widht of given cell boundary --> is used to query the rectangular/rectilinear bounding coordindates of given cell views --> is used to query all the sessions/views available of parent cell objs -selected --> is used to query all the objects which are selected in the GUI regions --> is used to query regions in given cell regions -shape rectangular|rectilinear --> used to query regions of rectangular/rectilinear shape regions -hier_level {min max} --> used to query regions based on different hierarchy levels placement_blockages --> used to query placement blockages in given cell placement_blockages -shape rectangular|rectilinear --> used to query placement blockages of rectangular/rectilinear shape placement_blockages -type lef|def|user --> used to filter placement blockages based on type lef/def or user created placement_blockages -hier_level {min max} --> used to query placements blockages belonging to different hierarchy level routing_blockages --> used to query routing blockages in given cell routing_blockages -shape rectangular|rectiliner --> used to filter routing of rectangular/rectilinear shape routing_blockages -type lef|def|user --> used to filter routing blockages based on type lef/def or user created routing_blockages -layer <> --> used to filter routing blockages belonging to given layer routing_blockages -hier_level {min max} --> used to query routing blockages belonging to different hierarchy level	db query /work/SUBCHIP bbox db query /work/TOP routing_blockages -hier_level {0 max} -type user -shape

© 2015 Apache Design, Inc. – Subsidiary of ANSYS INC

CELL COMMANDS:

db query	<cell>	route_mesh -nets {<net1> <net2> ..} -layer {<layer1> <layer2> ..} -dir {h|v} -o|out <file> via_mesh -drop_via_layers {<upper> <lower>} -nets {<net1> <net2> ...} -o|out <file> pin_tap_spec -nets {<net1> <net2> ...} -route_layer <name> -pin_layers {<layer1> <layer2> ..} -o|out <file> ring -nets {<net1> <net2> ...} -top <layer> -bot <layer> -left <layer> -right <layer> -o|out <file> switch_mesh -master <name> -o|out <file> stdcell_straps -nets {<net1> <net2> ...} -layers {<layer1> <layer2> ..} -o|out <file>	route_mesh --> used to query Route Mesh belonging to given cell route_mesh -nets {<net1> <net2> ..} --> used to query Route Mesh Specs in given cell which has atleast one of given nets route_mesh -layers {<layer1> <layer>} --> used to query Route Mesh Specs in given cell which has atleast one of given nets route_mesh -dir h/v --> used to filter Route Mesh Specs in given cell based on direction horizontal or vertical via_mesh --> used to query Via Mesh Spec's in givne cell via_mesh -drop_via_layers {<upper> <bottom>} --> used to query via mesh spec's which has given upper and bottom via layers via_mesh -nets {<net1> <net2>..} --> used to filter via mesh specs in a given cell based on given nets. pin_tap_spec --> used to query Macro Pin tapping specs in given cell pin_tap_spec -nets {<net1> <net2> ..} --> used to query Macro pin tapping specs belonging to atleast one of given nets pin_tap_spec -route_layer <> --> used to filter Macro pin tapping specs in given cell based on given route layer for Pin tapping spec pin_tap_spec -pin_layers {<layer1> <layer2> ..} --> used to query Macro pin tapping specs which has atlease one of given pin layer in given cell ring --> used to query ring specs in given cell ring -top <> -bot <> -left <> -right <> --> used to query ring specs in given cell based on given left, right, top and bottom layers given ring -nets {<net1> <net2> ..} --> used to query ring specs belonging to atleast one of given net switch_mesh --> used to query Switch array Specs in given cell switch_mesh -master <> --> Used to filter Switch array specs in given cell based on switch master stdcell_straps --> Used to query Standard cell strap specs in given cell stdcell_straps -nets {<net1> <net2>..} --> used to query Standard cell strap specs in given cell belonging to atleast one of given net stdcell_straps -layers {<layer1> <layer2>..} --> used to query Standard cell strap specs in given cell belonging to atleast one of given layer	db query /work/SUBCHIP bbox db query /work/TOP routing_blockages -hier_level {0 max} -type user -shape

© 2015 Apache Design, Inc. – Subsidiary of ANSYS INC

CELL COMMANDS:

db query	<cell>	ploc_mesh -layers {<layer1> <layer2> ..} -o|out <file> power_spec -type static|dynamic -o|out <file> rush_current_spec -o|out <file> nets -type power | ground | signal | clock | analog | tieoff | reset | scan -o|out <file> insts -type block | routed_block | hardip | io | switch | cover | endcap | pgbump | signal_bump | stdcell -master <name> -hier_level {<min> <max>} -switch_net_pair {<net1> <net2>} -nets {<net1> <net2> <net3> ...} -placement_type FIXED|UNPLACED|COVER|PLACED -o|out <file> pins -type power | ground | signal | clock | analog | tieoff | reset | scan -domain_type internal|external| control -dir input | output | inout | tristate -o|out <file> plocs -layer <layer_name> -net <net_name> -type < power | ground > -o|out <file>	ploc_mesh --> used to query ploc mesh specs in given cell ploc_mesh -layers {<layer1> <layer2>...} --> used to query Ploc mesh specs on atleast one of given layer in given cell power_spec --> used to query Power Specs in give cell power_spec -type static|dynamic --> used to query power specs in given cell based on type static or dynamic rush_current_spec --> used to query Ramp up specs in given cell nets --> used to query all the nets in given cell nets -type power | ground | signal | clock | analog | tieoff | reset | scan --> used to query nets in given cell based on type of net ""power/ground/signal/clock/analog/tieoff/reset/scan"" filter insts --> used to query all the instances belonging to given cell insts -type block | routed_block | hardip | io | switch | cover | endcap | pgbump | signal_bump | stdcell --> used to query instances in given cell based on type of cell ""block/hardip/io/switch/cover/endcap/pgbump/signal_bump/stdcell"" filter insts -type master <master name> --> used to query instances in given cell based on the master cell name of instance filter insts -nets {<net1> <net2> ..} --> used to query instances in given cell connected to given nets insts -hier_level {<min> <max>} --> used to query instances belonging to given hierarchy level insts -switch_net_pair {<net1> <net2>} --> used to query switches instances belonging to only given switch internal, external net pair insts -placement_type FIXED|UNPLACED|COVER|PLACED --> used to query instances in given cell based on type of placement ""FIXED/UNPLACED/COVER/PLACED"" filter pins --> used to query pins in given cell pins -type -type power | ground | signal | clock | analog | tieoff | reset | scan --> used to query pins in given cell based on given type ""power/ground/signal/clock/analog/tieoff/reset/scan"" filter pins -domain_type internal|external| control --> used to query switch cell pins belonging to domain type internal/external/control pins -dir input | output | inout | tristate --> used to pins of given direction plocs --> used to query all the plocs present in given cell plocs -layer <layer name> --> used to query plocs created on a given layer plocs -net <net name> --> used to query plocs on a particular net plocs -type power|ground --> used to query plocs of type power|ground	db query /work/SUBCHIP bbox db query /work/TOP routing_blockages -hier_level {0 max} -type user -shape

NOTE : 'db foreach' command can be used to access large lists returned by TCL query commands.

Format of command :

db foreach <variable> "query <object_name> <prop> [filters]" {<script>}

© 2015 Apache Design, Inc. – Subsidiary of ANSYS INC

INSTANCE COMMANDS:

Command	Options	Allowed Arguments	Description	Example
db query	<instance>	bbox -o|out <file> orientation -o|out <file> origin -o|out <file> type -o|out <file> master -o|out <file> parent -o|out <file> boundary -o|out <file> instpins -type power | ground | signal | clock | analog | tieoff | reset | scan -dir input | output | inout | tristate -o|out <file> connectivity -type power | ground | signal | clock | analog | tieoff | reset | scan -dir input | output | inout | tristate -top_net <0|1> -o|out <file>	Used to query all the properties of an Instance bbox --> returns the bbox of the given instance orientation --> returns the orientation of the given instance origin --> returns the origin (i.e., llx,lly) of the given instance type --> returns the type of instance i.e., block/switch/cover/io/hardip/std cell etc., master --> returns the master of the given instance parent --> returns the parent instance for the given instance boundary --> returns rectangular/rectilinear bounding coordindates of given instance instpins --> returns instpins of given instance instpins -type power | ground | signal | clock | analog | tieoff | reset | scan --> returns instpins of given instance of given type instpins -dir input | output | inout | tristate --> returns instpins of given instance of given direction connectivity --> returns the logical connectivity of given instance. Default Instance Pin and block level net connectivity -type power | ground | signal | clock | analog | tieoff | reset | scan --> returns the logical connectivity for instpins of given type connectivity -dir input | output | inout | tristate --> returns the logical connectivity for instpins of given direction connectivity -top_net <0|1> --> -top_net 0 gives logical connectivity with block level net, where as -top_net gives logical connectivity with top level net	db query /work/TOP/SUBCHIP_INST/reg_bank1 bbox db query /work/TOP/SUBCHIP_INST/reg_bank1 connectivity -type power -top_net 1

NOTE : 'db foreach' command can be used to access large lists returned by TCL query commands.

Format of command :

db foreach <variable> "query <object_name> <prop> [filters]" {<script>}"

© 2015 Apache Design, Inc. – Subsidiary of ANSYS INC

REGION COMMANDS:

Command	Options	Allowed Arguments	Description	Example
db query <region_name>	orientation	-o|out <file>	Returns the orientation of the Region	db query /work/mdp4_waverider/R1 orientation
	height	-o|out <file>	Returns the height of the region	db query /work/mdp4_waverider/R1 height
	location	-o|out <file>	Returns the origin co-ordinates of the region	db query /work/mdp4_waverider/R1 location
	width	-o|out <file>	Returns the width of the region	db query /work/mdp4_waverider/R1 width
	bbox	-o|out <file>	Returns the bbox of the region	db query /work/mdp4_waverider/R1 bbox
	boundary	-o|out <file>	Returns the rectilinear boundary of the Region	db query /work/mdp4_waverider/R1 boundary
	obj_type	-o|out <file>	Returns the object type of the queried object. In this case it returnd 'Region'	db query /work/mdp4_waverider/R1 obj_type

NOTE : 'db foreach' command can be used to access large lists returned by TCL query commands.

Format of command :

db foreach <variable> "query <object_name> <prop> [filters]" {<script>}

© 2015 Apache Design, Inc. – Subsidiary of ANSYS INC

PIN COMMANDS

Command	Options	Allowed Arguments	Description	Example
db query	<pin_object_name>	cell	'cell' returns the master cell in which the pin is located	db query /work/SUBCHIP/pin:blk_pad_in type signal
		type	'type' returns the type of pin : signal , power , ground are the types of pins	db query /work/SUBCHIP/pin:blk_pad_in cell SUBCHIP
		direction	' direction' returns the direction of the pin - input/output/inout	db query /work/SUBCHIP/pin:blk_pad_in direction input
		obj_type	obj_type' returns the type of object.	db query /work/SUBCHIP/pin:blk_pad_in obj_type Pin

NOTE : 'db foreach' command can be used to access large lists returned by TCL query commands.

Format of command :

db foreach <variable> "query <object_name> <prop> [filters]" {<script>}

© 2015 Apache Design, Inc. – Subsidiary of ANSYS INC

NET COMMANDS:

Command	Options	Allowed Arguments	Description	Example
db query	<net_object_id>	voltage	'voltage' returns the analysis voltage of that net	db query /work/TOP/net:VDD_TOP voltage 1.0
		instpins	'instpins' returns all instance pins connected to a net	db query /work/TOP instpins /work/TOP/PNR_COMPLETE_BLOCK:VDD /work/TOP/DSP:VDD /work/TOP/top_mem_1:VDDPE
		pins	'pins' returns the pins of a block which are connected to the net	db query /work/SUBCHIP/net:VSS_GLOBAL pins /work/SUBCHIP/pin:blk_pad_in /work/SUBCHIP/pin:blk_pad_out
		vias	'vias' returns all via ids of the net	db query /work/TOP/net:VDD_TOP vias V-11743-P-27758 V-11744-P-27758 V-11745-P-27758 V-11746-P-27758 V-11747-P-27758 V-11748-P-27758 V-11749-P-27758 V-11750-P-27758 V-11751-P-27758 V-11752-P-27758 V-11753-P-27758 V-11754-P-27758
		wires	' wires' returns all wire ids of the net	db query /work/TOP/net:VDD_TOP wires W-550-P-27758 W-551-P-27758 W-552-P-27758 W-553-P-27758 W-554-P-27758 W-555-P-27758 W-556-P-27758 W-557-P-27758 W-558-P-27758 W-559-P-27758
		obj_type	'obj_type' returns the obj_type of the net	db query /work/TOP/net:VDD_TOP obj_type Net

NOTE : 'db foreach' command can be used to access large lists returned by TCL query commands.

Format of command :

db foreach <variable> "query <object_name> <prop> [filters]" {<script>}

© 2015 Apache Design, Inc. – Subsidiary of ANSYS INC

WIRE/VIA COMMANDS:

Command	Options	Allowed Arguments	Allowed Filters	Description	Example
db query	wire_id	bbox direction layer net width length spec obj_type	-o | out <filename>	bbox : returns the bounding box of the wire direction : returns the direction of the wire layer : returns the layer of the wire net : returns the net of the wire width : returns the width of the wire length : returns the length of the wire spec : returns the spec name of the wire obj_type : returns the object type -o|out is used to mention the output file name	db query W-286-P-7 bbox -out file
db query	via_id	location upperlayer lowerlayer net viamodel viarule cutlayer spec nx ny obj_type Filter for all the above arguments -o | out	-o | out <filename>	location: returns the location of the via upperlayer : returns the upper layer of the via lowerlayer]: returns the lower layer of the via net : returns the net of the via viamodel : returns the via model of the via cutlayer : returns the cut layer of the via spec : returns the category of the via (Manual / Spec) nx : returns the nx of the via ny : returns the ny of the via obj_type : returns the object type -o|out is used to mention the output file name	db query V-9-P-7 location -o file1

NOTE : 'db foreach' command can be used to access large lists returned by TCL query commands.

Format of command :

db foreach <variable> "query <object_name> <prop> [filters]" {<script>}

© 2015 Apache Design, Inc. – Subsidiary of ANSYS INC

PLOC COMMANDS:

Command	Options	Allowed Arguments	Allowed Filters	Description	Example
db query	ploc_name	location layer net type spec obj_type	-o | out <filename>	location: returns the location of the ploc layer : returns the layer of the ploc type : returns the type of the ploc(P/G) net : returns the net of the ploc spec : returns the category of the ploc (Manual / Spec) obj_type : returns the object type -o|out is used to mention the output file name	db query $cc/ploc:ploc1 location -o file1

NOTE : 'db foreach' command can be used to access large lists returned by TCL query commands.

Format of command :

db foreach <variable> "query <object_name> <prop> [filters]" {<script>}

© 2015 Apache Design, Inc. – Subsidiary of ANSYS INC

BLOCKAGE COMMANDS:

Command	Options	Allowed Arguments	Description	Example
db query <routing_blockage_name>	boundary	-o|out <file>	Returns the rectilinear boundary of the blockage	db query <name> boundary
	bbox	-o|out <file>	Returns the bbox of the blockage	db query<name> bbox
	layer	-o|out <file>	Returns the layers on which the blockage is present	db query <name> layer
db query <placement_blockage_name>	boundary	-o|out <file>	Returns the rectilinear boundary of the blockage	db query <name> boundary
	bbox	-o|out <file>	Returns the bbox of the blockage	db query <name> bbox

NOTE : 'db foreach' command can be used to access large lists returned by TCL query commands.

Format of command :

db foreach <variable> "query <object_name> <prop> [filters]" {<script>}

© 2015 Apache Design, Inc. – Subsidiary of ANSYS INC

MISCELLANEOUS COMMANDS:

Command	Options	Allowed Arguments	Description	Example
db delete	<object_name>		Used to delete the objects. Following are the supported object hier names <region_name> --> deletes Region <inst_name> --> deletes instance <id> --> deletes object with the specified id rm --> deletes Route Mesh Spec net --> deletes a Net pin_tapping --> deletes Pin Tapping Spec power --> deletes Power Spec vm --> deletes Via Mesh Spec strap --> deletes Strap ring --> deletes Ring Spec pb --> deletes Placement blockage rb --> deletes Routing Blockage	db delete /work/top/r1 db delete /work/top/inst db delete <id> db delete /work/top/rm:RM1 db delete /work/top/net:VDD db delete /work/top/pin_tapping:PT1 db delete /work/top/power:PS1 db delete /work/top/vm:name db delete /work/top/strap:name db delete /work/top/ring:RING1 db delete /work/top/pb:PB1 db delete /work/top/rb:RB1
db delete_wires	<parent cell>	net <net> layer <layer name> bbox {<llx> <lly> <urx> <ury>} offsets {<left> <right> <top> <bot>} rects_pattern {<width> <height> <x_pitch> <y_pitch>} preview 0|1	Used to delete rectangles with the mentioned specification net --> provide net name to be deleted layer --> provide layer name to be deleted bbox --> Specify the bbox for the area where rectangles should be deleted. offsets --> Specify the offset from bounding box from all 4 sides (top, left, bottom and right). rects_pattern --> Specify width, height, x-pitch, y-pitch preview --> Specify to Preview the rectangular geometries to be deleted	
db exists	<object_name>		Used to check the existence of objects. Following are the supported object hier names rm --> provide RouteMeshSpec name net --> provide net name pin_tapping --> provide PinTappingspec name power --> provide Powerspec name ring --> provide Ring spec name pm --> provide Ring spec name strap --> provide Standard cell row strap spec name sm --> provide Switchmeshspec name vm --> provide viemeshspec name <instance> --> provide instance name <pin> --> provide instance pin name <hierarchical pin> --> provide hierarchical instance pin name viam --> provide via model name <region> --> provide region name rb --> provide routing blockage name pb --> provide placement blockage name ploc --> provide ploc name lyr --> provide layer name viar --> provide via rule name rc --> provide Rampup spec name <CsmUniqueID> --> provide wire/via ID	db exists /work/Top/rm:name1 db exists /work/Top/net:VDD db exists /work/Top/pin_tapping:name1 db exists /work/Top/power:name1 db exists /work/Top/ring:name1 db exists /work/Top/pm:name1 db exists /work/Top/strap:name1 db exists /work/Top/sm:name1 db exists /work/Top/vm:name1 db exists /work/TOP db exists /work/top/pin:vdd db exists /work/top/inst1/inst2:vss db exists /work/top/viam:model1 db exists /work/top/r1 db exists /work/top/rb:r1 db exists /work/top/pb:p1 db exists /work/top/ploc:ploc1 db exists /tech/lyr:M1 db exists /tech/viar:rule1 db exists /work/top/rc:name db exists <wire/via ID>

© 2015 Apache Design, Inc. – Subsidiary of ANSYS INC